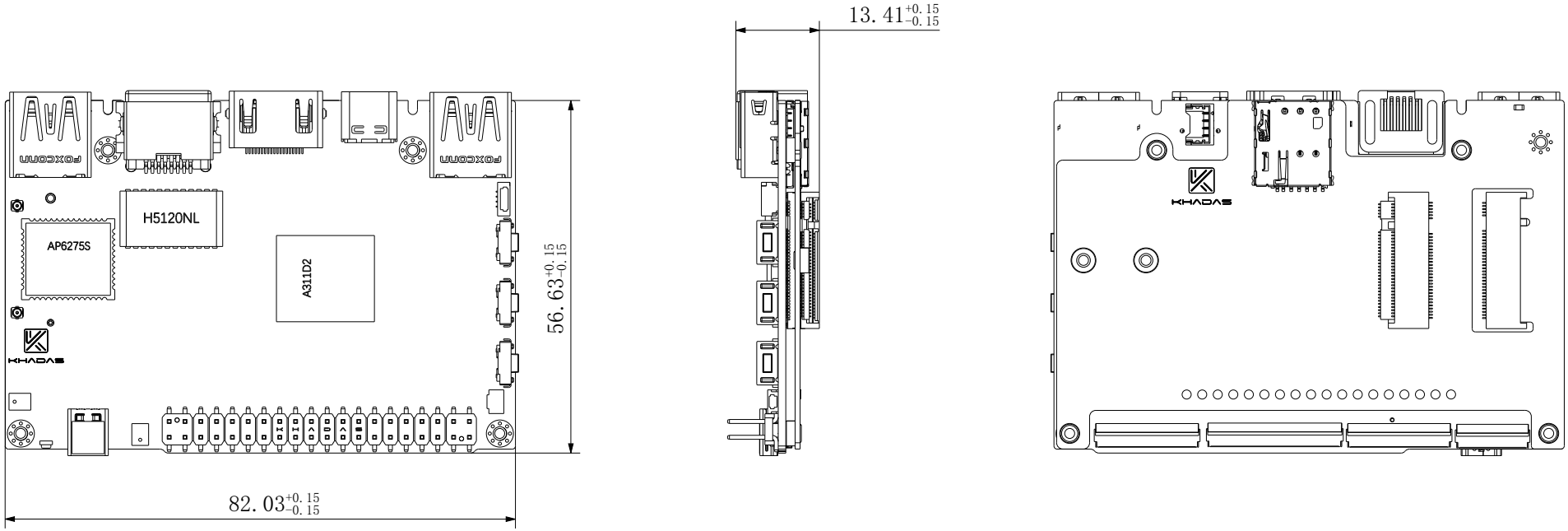

13. 41 +0. 15 −0. 15
H5120NL
AP6275S
A311D2
56. 63 +0. 15 −0. 15
82. 03 +0. 15 −0. 15