A311D2

Datasheet

Revision: 0.2

Release Date: 2022-10-13

Copyright

©2022 Amlogic. All rights reserved. No part of this document may be reproduced, transmitted, transcribed, or translated into any language in any form or by any means without the written permission of Amlogic.

Trademarks

Amlogic, and other Amlogic icons are trademarks of Amlogic companies. All other trademarks and registered trademarks are property of their respective holders.

Disclaimer

Amlogic may make improvements and/or changes in this document or in the product described in this document at any time.

This product is not intended for use in medical, life saving, or life sustaining applications.

Circuit diagrams and other information relating to products of Amlogic are included as a means of illustrating typical applications. Consequently, complete information sufficient for production design is not necessarily given. Amlogic makes no representations or warranties with respect to the accuracy or completeness of the contents presented in this document.

Contact Information

- Website: www.amlogic.com
- Pre-sales consultation: contact@amlogic.com
- Technical support: support@amlogic.com

Revision History

Issue 0.2 (2022-10-13)

This is the 0.2 release.

Compared to last version, the following contents are changed.

Section	Change Description
4.5 and 5.2	Added a note about IO interface.

Issue 0.1 (2022-06-01)

This is the preliminary 0.1 release.

Amlogic Proprietary and Confidential
Copyright © Amlogic. All rights reserved.

Contents

Revision History ii
1 **About This Document** 1
2 **General Description** 2
3 **Features Summary** 3
4 **Pinout Specification** 8
4.1 Pinout Diagram 8
4.2 Pin Order 8
4.3 Pin Description 18
4.4 Pin Multiplexing Tables 39
4.5 Signal Description 47
5 **Operating Conditions** 57
5.1 Absolute Maximum Ratings 57
5.2 Recommended Operating Conditions 57
5.3 Ripple Voltage Specifications 58
5.4 Thermal Resistance 59
5.5 DC Electrical Characteristics 60
5.5.1 Normal GPIO Specifications 60
5.5.2 Open Drain GPIO Specifications (For DIO_OD) 60
5.5.3 DDR4/LPDDR4/LPDDR4X SDRAM Specifications 61
5.6 Timing Information 62
5.6.1 I2C Timing Specification 63
5.6.2 EMMC/SD Timing Specification 64
5.6.3 NAND Timing Specification 68
5.6.4 SPICC Timing Specification 71
5.6.5 SPIFC Timing Specification 71
5.6.6 Ethernet Timing Specification 72
5.6.7 Audio Timing Specification 75
5.6.8 PDM Timing Specification 78
5.6.9 UART Timing Specification 79
5.7 Recommended Oscillator Electrical Characteristics 79
5.7.1 Recommended RTC_CLK_IN Electrical Characteristics 80
5.8 Recommended PDVFS Specification 80
5.9 Power On Configuration 81
5.10 Power On Reset 81
5.11 Recommended Power On Sequence 82
5.12 Power Consumption 83
5.13 Storage and Baking Conditions 84

Amlogic Proprietary and Confidential
Copyright © Amlogic. All rights reserved.

6 **Mechanical Dimensions** 85
7 **System** 86
7.1 Memory Map 86
7.2 Power Domain 90
7.2.1 A73 & A53 Power Domain 93
7.2.2 General Power Domain 94
7.2.3 Power Switch Sequence 94
7.2.4 Power Control 95
7.2.5 Register Description 98
7.3 System Booting 123
7.3.1 Overview 123
7.3.2 Power-on Flow Chart 123
7.4 CPU 124
7.4.1 Overview 124
7.4.2 Register Description 125
7.5 GPU 151
7.6 ADLA 151
7.7 Clock 154
7.7.1 Overview 154
7.7.2 24MHz Crystal Oscillator Layout 156
7.7.3 Frequency Calculation 157
7.7.4 Clock Measure 170
7.7.5 Register Description 179
7.8 Reset 215
7.8.1 Overview 216
7.8.2 Register Description 217
7.9 GPIO 223
7.9.1 Overview 224
7.9.2 GPIO Multiplex Function 224
7.9.3 Register Description 231
7.10 Interrupt Control 263
7.10.1 Overview 264
7.10.2 Interrupt Source 264
7.10.3 Register Description 266
7.11 Timer 270
7.11.1 Overview 270
7.11.2 General-Purpose Timer 270
7.11.3 Watchdog Timer 270
7.11.4 Register Description 272
7.12 Crypto 275

Amlogic Proprietary and Confidential
Copyright © Amlogic. All rights reserved.

7.12.1 Overview 275
7.12.2 Key Ladder 275
7.12.3 RNG 276
7.12.4 CTR_DRBG 276
7.12.5 EFUSE 276
7.13 MIPI_ISP TOP 277
7.13.1 MIPI_CSI_DPHY 277
7.13.2 MIPI_ISP_ADAPT 277
7.13.3 ISP_APB_DMA 278
7.13.4 Register Description 280
7.14 Mailbox 396
7.14.1 Overview 396
7.14.2 Register Description 397
8 **GE2D** 409
8.1 Overview 409
8.2 Register Description 411
9 **CVE** 441
9.1 Features 441
9.2 Register Description 443
10 **Video Path** 484
10.1 Video Input 484
10.1.1 Features 484
10.1.2 TS Input 485
10.1.3 Crypto Algorithm 486
10.1.4 TS Output 486
10.1.5 HDMIRX 491
10.1.6 CEC Registers 532
10.2 Video Output 557
10.2.1 Overview 557
10.2.2 VPU 557
10.2.3 Register Description 557
11 **Audio Path** 1264
11.1 Audio Clock Tree 1264
11.2 Audio Input 1267
11.2.1 Overview 1268
11.2.2 TDM Input Interface 1268
11.2.3 SPDIF Input Interface 1268
11.2.4 PDM 1269
11.2.5 eARC RX 1270
11.3 Audio Output 1294

Amlogic Proprietary and Confidential
Copyright © Amlogic. All rights reserved.

11.3.1 Overview....1295
11.3.2 TDM Output Interface....1295
11.3.3 SPDIF Output Interface....1295
11.3.4 Audio REQ_FRDDR....1296
11.3.5 eARC TX....1298
11.4 DSP....1318
11.4.1 DSP_TOP....1319
11.4.2 DSP IRQ CTRL....1320
11.4.3 GPIO 32/QIF 32 Interface....1322
11.4.4 DSP Registers....1323
11.5 DDR Datapath....1340
11.5.1 Overview....1340
11.5.2 Audio TODDR....1340
11.5.3 Audio FRDDR....1340
11.6 Audio Loopback....1341
11.7 Audio Resample A/B....1342
11.8 Audio VAD....1343
11.9 Audio EQDRC....1344
11.10 Audio Locker....1345
11.11 Register Description....1347
11.11.1 CLK/RESET Registers....1347
11.11.2 OTHER Registers....1361
11.11.3 TODDR Registers....1368
11.11.4 FRDDR Registers....1375
11.11.5 DDR ARB Registers....1378
11.11.6 LoopBack Registers....1380
11.11.7 TDM Registers....1386
11.11.8 SPDIF Registers....1406
11.11.9 ResampleA Registers....1418
11.11.10 TOACODEC Registers....1423
11.11.11 TOHDMITX Registers....1426
11.11.12 FRHDMIRX....1428
11.11.13 TOVAD Registers....1428
11.11.14 PDM Registers....1428
11.11.15 LOCKER Registers....1432
11.11.16 VAD Registers....1436
11.11.17 EQDRC Registers....1444
11.11.18 EARC RX Registers....1466
12 **AFIFO**....1488
12.1 Register Description....1488

Amlogic Proprietary and Confidential
Copyright © Amlogic. All rights reserved.

13 **Memory Interface** 1493
13.1 DDR 1493
13.1.1 Overview 1493
13.1.2 AXI to DDR Address Remapping 1494
13.1.3 DMC AXI Address Security Region Checking and Data Scrambling 1495
13.1.4 DMC Security Register Bit Assignment 1499
13.1.5 AXI0 CPU & GPU Virtual Channel 1502
13.1.6 DMC AXI Port QoS Control 1503
13.1.7 DMC TEST Module 1503
13.1.8 Clock, Refresh, Retraining and Frequency Change for 2 DMCs 1503
13.1.9 Register Description 1504
13.2 eMMC/SD 1582
13.2.1 Overview 1582
13.2.2 Pin Description 1582
13.2.3 eMMC/SD Mode 1583
13.2.4 Descriptor 1583
13.2.5 Register Description 1586
13.3 Serial Peripheral Interface Communication Controller 1594
13.3.1 Overview 1594
13.3.2 Features 1595
13.3.3 Function 1596
13.3.4 Register Description 1596
13.4 Serial Peripheral Interface Flash Controller 1603
13.4.1 Overview 1603
13.4.2 Features 1603
13.4.3 Register Description 1604
14 **I/O Interface** 1614
14.1 Universal Serial Bus 1614
14.1.1 Overview 1614
14.1.2 Features 1614
14.1.3 Register Description 1614
14.2 PCIE 1623
14.3 Ethernet 1623
14.3.1 Overview 1623
14.3.2 Ethernet Top Registers 1623
14.3.3 Ethernet MAC 1625
14.3.4 Ethernet PHY 1626
14.4 Inter-Integrated Circuit (I2C) 1631
14.4.1 Overview 1632
14.4.2 Features 1632

Amlogic Proprietary and Confidential
Copyright © Amlogic. All rights reserved.

14.4.3 Register Description....1632
14.5 Universal Asynchronous Receiver And Transmitter....1642
14.5.1 Overview....1642
14.5.2 Features....1643
14.5.3 Functional Description....1644
14.5.4 Register Description....1644
14.6 Infrared Remote....1648
14.6.1 Overview....1648
14.6.2 IR Demodulation....1648
14.6.3 Legacy IR Control....1651
14.6.4 Multi Format IR Control....1652
14.6.5 Register Description....1653
14.7 Pulse-Width Modulation....1669
14.7.1 Overview....1669
14.7.2 Register Description....1671
14.8 SAR ADC....1674
14.8.1 Overview....1674
14.8.2 Register Description....1675
15 **System Interface**....1685
15.1 JTAG....1685
15.2 Temp Sensor....1685
15.2.1 Overview....1685
15.2.2 Register Description....1686
16 **Appendix**....1693
16.1 Net Length....1693

Amlogic Proprietary and Confidential
Copyright © Amlogic. All rights reserved.

1 About This Document

This document is applicable for A311D2 series SoCs, please contact your Amlogic sales representative for details.

Amlogic Proprietary and Confidential
Copyright © Amlogic. All rights reserved.

2 General Description

A311D2 is an advanced application processor designed for smart display. It integrates a powerful CPU/GPU subsystem, a powerful NPU (Neural network Processing Unit), a secured 8K video CODEC engine with all major peripherals to form the ultimate high-performance smart display chip.

The main system CPU is based on Big.LITTLE architecture which integrates a quad-core ARM Cortex-A73 CPU cluster and a quad-core Cortex-A53 cluster with unified L2 cache for each cluster to improve system performance. In addition, the CPU includes the NEON SIMD co-processor to improve software media processing capability.

The graphic subsystem consists of two graphic engines and a flexible video/graphic output pipeline. The ARM Mali-G52 MC4 (2EE) GPU handles all OpenGL ES 3.2, Vulkan 1.1 and OpenCL 2.0 graphic programs, while the 2.5D graphics processor handles additional scaling, alpha, rotation and color space conversion operations. Together, the CPU and GPU handle all operating system, network, user-interface and game related tasks.

Amlogic Video Engine (AVE-10) is a subsystem which uses dedicated hardware video decoders and encoders to offloads the CPUs from all video CODEC processing. AVE-10 is capable of decoding 8K4K resolution video within Trusted Video Path (TVP) for secured DRM applications. It supports all major video formats including MPEG-1/2/4, VC-1/WMV, AVS+, AVS2, MJPEG, H.264, H265-10, VP9-10, AV1 and also JPEG. The independent encoder can concurrently encode in JPEG up to 1080P at 60fps and H.265/H.264 up to 4K at 50fps.

The video/graphics output pipeline includes Dolby Vision Optional, HDR10+, HDR10, HLG and Technicolor Prime HDR processing, BT.2020/ BT.2100 processing, motion compensated and motion adaptive de-interlacer, flexible programmable super scalar, local dimming and many picture enhancement filters before passing the enhanced image to the video output ports. It supports 3 separate display controllers that can be flexibly configured to the V-by-One, LVDS, eDP, MIPI-DSI and HDMI output.

3 HDMI 2.1 receiver ports are available. The HDMI ports can receive up to 4K2K HDR video and support dynamic HDR, ALLM, QFT, QMS, VRR and HDCP 1.4/2.3.

The built-in three demux can process the video streams from the serial transport stream input interface, which can connect to external tuner/demodulator. DVB Common Descrambler 1.0 is supported in addition to DES, Triple DES (TDES/3DES) and AES streaming crypto formats. An integrated ISO7816 controller is included for interfacing to external smart card.

It is optimized for low power far-field voice application. Two dedicated HiFi 5 DSPs offload the main CPU for the top of the line audio front end and wake-word algorithms. It also has built-in Voice Activity Detection (VAD) module for ultra-low power operations during system standby and full digital MIC interface including PDM, TDM and I2S up to 8 channels are available.

The SoC integrates rich advanced network and peripheral interfaces, including a 10/100/1000M Ethernet MAC with RGMII, 10/100M Ethernet PHY, USB3.0 DRD, PCIe 2.0 and USB 2.0 high-speed port, SDIO 3.0 controller, eMMC 5.1 controller and multiple SDIO/SD card controllers, UART, I2C, high-speed SPI PWMs and a built-in IR blaster. The flexible and programmable QoS-based switch fabric and memory controller tie all the processing cores and peripherals together and connects to the DRAM memory bus.

Standard development environment utilizing SecureOS, Linux and GNU/GCC Android tool chain is supported. Please contact your AMLOGIC sales representative for more information.

Amlogic Proprietary and Confidential
Copyright © Amlogic. All rights reserved.

3 Features Summary

Figure 3-1 Features Summary

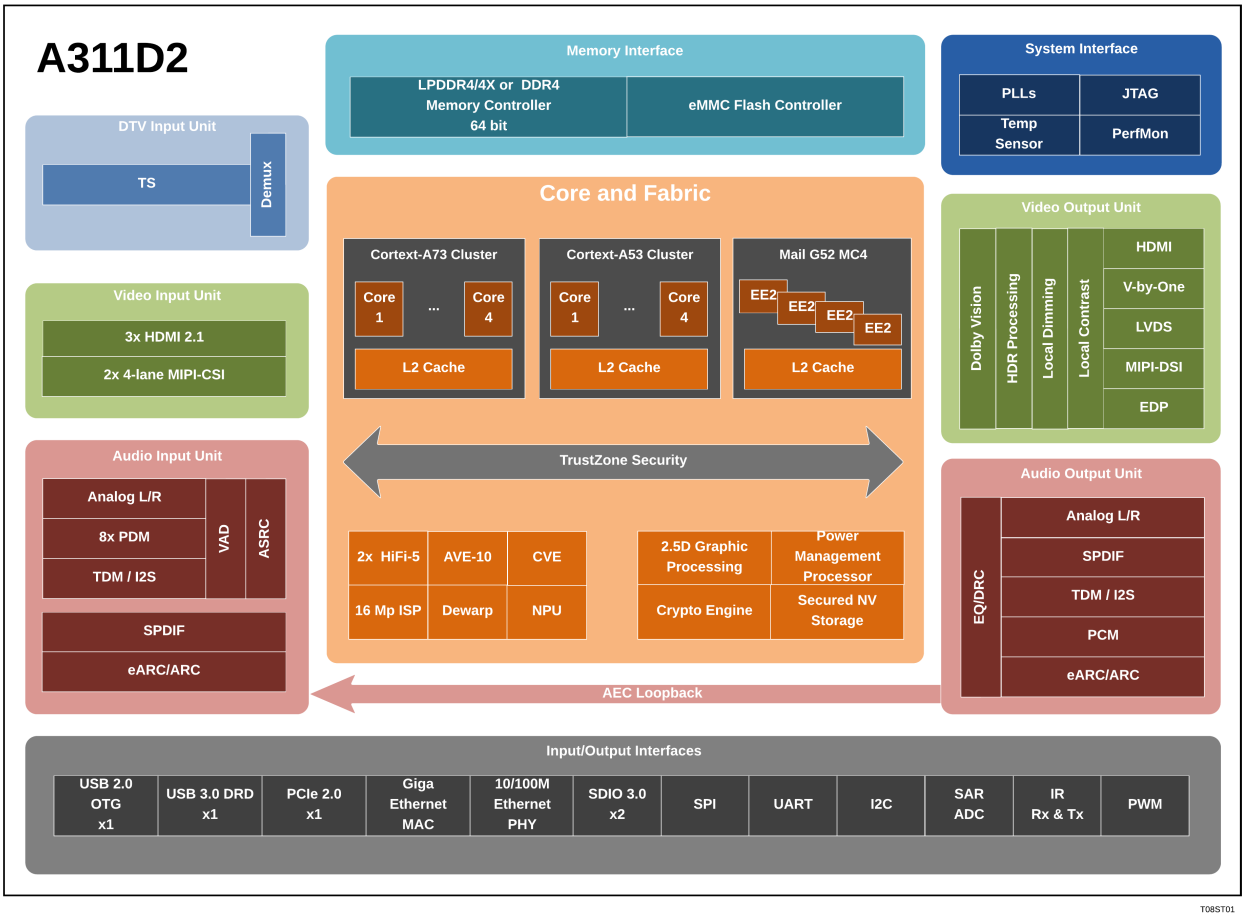

CPU Sub-system

- Quad core ARM Cortex-A73 + Quad core Cortex-A53 CPU
- ARMv8.0 architecture with Neon extensions and cryptography extension
- Unified system L2 cache for each cluster
- Advanced TrustZone security system
- Application based traffic optimization using internal QoS-based switching fabrics
- CoreSight debugger support

NPU

- 3.2 Tops
- 512KB Internal RAM and SMMU address re-mapper
- Supports all major deep learning frameworks including Tensorflow, Tensorflow Lite, ONNX, Pytorch, Darknet, MxNet and Caffe

CVE

- Supports a variety of intelligent analysis applications

Amlogic Proprietary and Confidential
Copyright © Amlogic. All rights reserved.

3D Graphics Processing Unit

- ARM Mali-G52 MC4 (2EE) GPU
- 8-wide warps, 2x dual texture pipe, 8x 8-wide execution engines (EE)
- Concurrent multi-core processing
- OpenGL ES 3.2, Vulkan 1.1 and OpenCL 2.0 support

2.5D Graphics Processor

- Fast bitblt engine with dual inputs and single output
- Programmable raster operations (ROP)
- Programmable polyphase scaling filter
- Supports multiple video formats 4:2:0, 4:2:2 and 4:4:4 and multiple pixel formats (8/16/24/32 bits graphics layer)
- Fast color space conversion
- Advanced anti-flickering filter

Crypto Engine

- AES block cipher with 128/256 bits keys, standard 16 bytes block size and streaming ECB, CBC and CTR modes
- DES/3DES block cipher with ECB and CBC modes supporting 64 bits key for DES and 192 bits key for 3DES
- Hardware key-ladder operation and DVB-CSA for transport stream encryption
- Built-in hardware True Random Number Generator (TRNG) and SHA-1/SHA-2 engine

Video/Picture CODEC

- Amlogic Video Engine (AVE-10) with dedicated hardware decoders up to 8Kx4K@24fps and encoders up to 4Kx2K@50fps
- Supports multi-video decoder up to 4Kx2K@60fps + 1x1080P@60fps
- Supports multiple “secured” video decoding sessions and simultaneous decoding and encoding
- Video/Picture Decoding
  - AV1 MP-10@5.1 up to 8Kx4K@24fps or 4Kx2K@60fps
  - H.265 HEVC MP-10@L5.1 up to 8Kx4K@24fps or 4Kx2K@60fps
  - VP9 Profile 2-10 up to 8Kx4K@24fps or 4Kx2K@60fps
  - AVS2 MP up to 4Kx2K@60fps
  - H.264 AVC HP@L5.1 up to 4Kx2K@30fps
  - MPEG-4 ASP@L5 up to 1080P@60fps (ISO-14496)
  - WMV/VC-1 SP/MP/AP up to 1080P@60fps
  - AVS-P16(AVS+) /AVS-P2 JiZhun Profile up to 1080P@60fps
  - MPEG-2 MP/HL up to 1080P@60fps (ISO-13818)
  - MPEG-1 MP/HL up to 1080P@60fps (ISO-11172)
  - Multiple language and multiple format sub-title video support
  - MJPEG and JPEG unlimited pixel resolution decoding (ISO/IEC-10918)
  - Supports JPEG thumbnail, scaling, rotation and transition effects
- Video/Picture Encoding
  - H.265 main-profile and H.264 high-profile video encoder up to 4K@50fps with low latency
  - Independent JPEG and H.264 encoder with configurable performance/bit-rate

Amlogic Proprietary and Confidential
Copyright © Amlogic. All rights reserved.

- JPEG image encoding up to 1080P at 60fps

11th Generation Advanced Amlogic TruLife Image Engine

- Supports Dolby Vision Optional, HDR10/10+, HLG, HLG, Prime HDR
- Full 12-bit internal data processing
- Motion compensated noise reduction and 3D digital noise reduction for random noise up to 4K resolution
- Block noise, mosquito noise, spatial noise and temporal noise reduction
- Motion compensated and motion adaptive de-interlacer
- Edge interpolation with low angle protection and processing
- 3:2/2:2 pulldown and Video on Film (VOF) detection and processing
- Smart sharpness with SuperScaler technology including de-ring, LTI, CTI, de-jaggy, peaking. Reproduce more high-frequency details while protecting flesh tones flexibly.
- Dynamic non-Linear contrast for detail enhancement
- 3D LUTs with 17x17x17 nodes, provide 4913 different control points, which is competent for matching calibrated displays to a target color space
- High precision HSL color space based color management with low saturation protection, independent luma/hue/saturation adjustment to achieve blue/green extension, fresh tone correction, and wider gamut for video
- Video mixer: 4x1080p60 or 1x4Kp60 + 1x1080p60 graphic plane and 3x4Kp60 video plane
- Independent HDR re-mapping of video and graphic layer
- Local dimming control for high nits backlights

Video Input/output Interface

- 3x HDMI 2.1 receiver and 1x HDMI 2.1 transmitter ports with EMP, ALLM, QFT, QMS, VRR, eARC, HDCP 1.4 /2.3, and up to 4Kx2K@60 max resolution
- 2x 8-lane V-by-One output with 1, 2, 4 regions supported, up to 4Kx2K 60Hz resolution
- LVDS output supporting up to 3x 1280x720 or 1x 1280x720 + 1x 1920x1080 resolution
- 2x 4-lane MIPI-DSI interface with panel calibration, resolution up to 2x 1920x1200 for each port
- 2x 4-lane eDP supporting panel up to 2560x1600 resolution
- Three independent Gamma table for LCD panel tuning
- Dithering logic for mapping to different LCD panel color depth

Camera Interface

- MIPI-CSI camera interface with 2x4 lanes
- Supports RAW, YUV or RGB camera input formats

ISP

- 16 Mp ISP with the resolution up to 4608x3456
- HDR sensor de-companding/ Dynamic Defect Pixel Correction/ Green channel equalization/ EW image flip
- 3A (AE/AWB/AF)
- Spatial/ Temporal/ Color Noise reduction
- Static White balance
- Lens shading correction
- Demosaic
- Chromatic aberration/ purple Fringing correction

Amlogic Proprietary and Confidential
Copyright © Amlogic. All rights reserved.

- linear matrix color correction
- Gamma correction

Dewarp Unit

- Supports single frame off line processing up to 4608x3456 video source
- Supports YUV semi-planer 420 format for both input and output
- Supports gray scale image processing
- Supports 360/ 180/ normal fish eye correction modes

Audio Processing and Input/Output

- HiFi 5 audio DSP Optional for highly optimized audio/voice processing
  - 64 KB Instruction Cache and 96 KB Data Cache
  - 32 MPU entries
  - MUL32, MUL16 and DIV32
  - HiFi 5 Single Precision Vector FP
  - HiFi 5 Half Precision Vector FP
  - HiFi 5 Neural Network Extension
- Supports MP3, AAC, WMA, RM, FLAC, Ogg, Dolby Audio Optional, DTS Optional and programmable with 7.1/5.1 down-mixing
- Low-power VAD and internal AEC loopback path
- 3 built-in TDM/I2S ports with TDM/PCM mode up to 192kHz x 32bits x 8ch or 48kHz x 32bits x 32ch and I2S mode up to 192kHz x 32bits x 8ch
- Digital microphone PDM voice input with programmable CIC, LPF and HPF, supports up to 8 DMICs
- 1 L/R analog input channel and 1 L/R output channel
- Supports concurrent dual audio stereo channel output with combination of I2S+PCM
- Supports Audio EQ/DRC for audio speaker
- Supports dynamic EQ adjustment

DTV Broadcasting Interface

- 3x Transport stream (TS) input interface with built-in demux processor for connecting to external digital TV tuner/demodulator
- Built-in PWM, I2C and SPI interfaces to control tuner and demodulator
- Integrated ISO 7816 smart card controller

Memory and Storage Interface

- 64-bit DRAM memory interface with dual ranks, max 16GB total logic address space and max 8GB total DDR capacity physical address
- Compatible with JEDEC standard DDR4-3200 /LPDDR4/LPDDR4X-4266 SDRAM
- 4-bit SD card and 4-bit SDIO interface support up to SDR104/HS200 mode
- 8-bit eMMC memory interface support up to HS400 mode
- Built-in 8k bits OTP memory for secured key storage

Network Interface

- IEEE 802.3 10/100/1000M Ethernet MAC with RGMII interface
- 10/100M Ethernet PHY interface
- WiFi/IEEE802.11 supporting via PCIe, USB or SDIO

Amlogic Proprietary and Confidential
Copyright © Amlogic. All rights reserved.

- Bluetooth supporting via USB or UART
- Network interface optimized for mixed WIFI and BT traffic

Integrated I/O Controllers and Interfaces

- One USB 2.0 high-speed USB I/O which supports USB OTG
- One USB 3.0 DRD port up to 5Gbps
- One PCIe 2.0 (Root Complex) port
- Multiple UARTs, I2Cs and PWMs
- SPI interface
- Programmable remote control input circuitry and IR-blaster output
- Built-in 10bit SAR ADC with 5 channels
- General Purpose IOs with built-in pull up and pull down

System, Peripherals and Misc. Interfaces

- Integrated general purpose timers, counters, DMA controllers
- 24 MHz crystal input
- Embedded debug interface using ICE/JTAG

Power Management

- Multiple internal power domains controlled by software
- Multiple sleep modes for CPU, system, DRAM, etc.
- Multiple internal PLLs to adjust the operating frequencies
- Multi-voltage I/O design for 1.8V and 3.3V

Security

- Trustzone based Trusted Execution Environment (TEE)
- Secured boot, encrypted hardware self-setup OTP, encrypted DRAM with memory integrity checker, hardware key ladder and internal control buses and storage
- Separated secure/non-secure Entropy true RNG and video watermarking
- Pre-region/ID memory security control and electric fence
- Hardware based Trusted Video Path (TVP), and secured contents (needs SecureOS software)
- Secured IO and secured clock

Package

- FCBGA, 14.3 mm x 16.1 mm, 0.4 ball pitch, RoHS compliant

Amlogic Proprietary and Confidential
Copyright © Amlogic. All rights reserved.

4 Pinout Specification

4.1 Pinout Diagram

Figure 4-1 Pinout Diagram (top view)

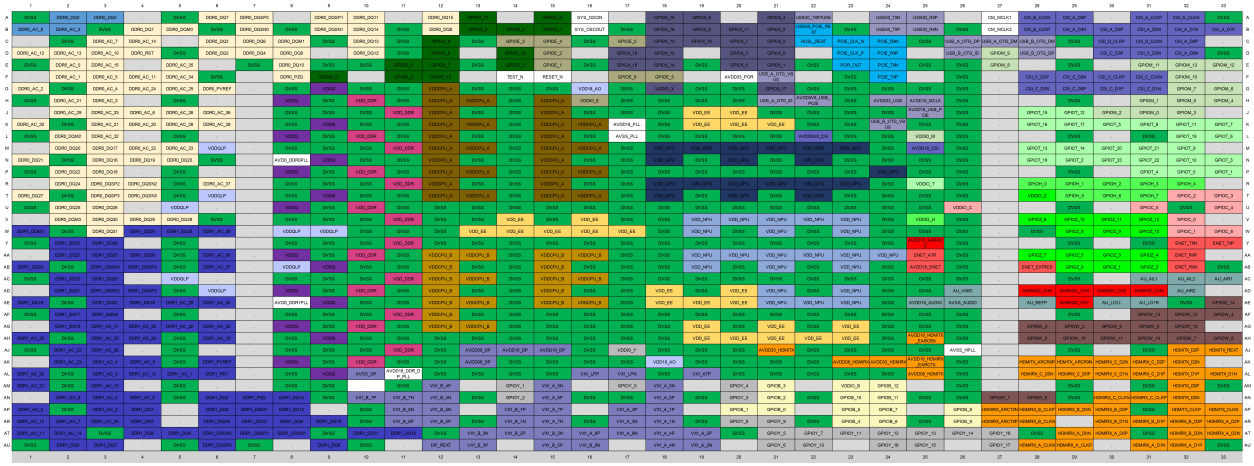

4.2 Pin Order

BALL #	NET NAME
A1	DVSS
A2	DDR0_DQ0
A3	DDR0_DQ5
A5	DVSS
A6	DDR0_DQ7
A7	DDR0_DQSP0
A9	DDR0_DQSP1
A10	DDR0_DQ11
A12	DDR0_DQ15
A13	GPIOD_11
A15	GPIOD_0
A16	SYS_OSCIN
A18	GPIOX_15
A19	GPIOX_8
A21	GPIOX_4
A22	USB20_TXRTUNE
A24	USB30_TXN
A25	USB30_RXP
A27	CM_MCLK1

BALL #	NET NAME
A28	CSI_B_CLKN
A29	CSI_A_D3P
A31	CSI_A_CLKP
A32	CSI_A_CLKN
A33	DVSS
B1	DDR0_AC_8
B2	DDR0_AC_9
B3	DVSS
B4	DDR0_DQ1
B5	DDR0_DQM0
B6	DVSS
B7	DDR0_DQSN0
B8	DVSS
B9	DDR0_DQSN1
B10	DDR0_DQ14
B11	DVSS
B12	DDR0_DQ8
B13	GPIOD_5
B14	GPIOD_4

BALL #	NET NAME
B15	GPIOD_1
B16	SYS_OSCOUT
B17	DVSS
B18	GPIOX_16
B19	GPIOX_9
B20	GPIOX_11
B21	GPIOX_5
B22	USB30_PCIE_REXT
B23	DVSS
B24	USB30_TXP
B25	USB30_RXN
B26	DVSS
B27	CM_MCLK2
B28	CSI_B_CLKP
B29	CSI_A_D3N
B30	CSI_A_D2P
B31	CSI_A_D2N
B32	CSI_A_D1N
B33	CSI_A_D1P

Amlogic Proprietary and Confidential
Copyright © Amlogic. All rights reserved.

BALL #	NET NAME
C2	DVSS
C3	DDR0_AC_7
C4	DDR0_AC_14
C6	DDR0_DQ3
C7	DDR0_DQ6
C8	DDR0_DQM1
C9	DVSS
C10	DDR0_DQ13
C11	DVSS
C12	GPIOD_9
C13	DVSS
C14	GPIOE_3
C15	GPIOE_4
C16	DVSS
C17	GPIOE_0
C18	GPIOX_13
C19	GPIOX_10
C20	GPIOX_7
C21	GPIOX_2
C22	HCSL_REXT
C23	PCIE_CLK_N
C24	PCIE_RXN
C25	DVSS
C26	USB_A_OTG_DP
C27	USB_A_OTG_DM
C28	USB_B_OTG_DM
C29	DVSS
C30	CSI_D_CLKP
C31	CSI_D_CLKN
C32	CSI_A_D0P
D1	DDR0_AC_12
D2	DDR0_AC_13
D3	DDR0_AC_10
D4	DDR0_RST
D5	DVSS
D6	DDR0_DQ2

BALL #	NET NAME
D7	DDR0_DQ4
D8	DDR0_DQ9
D10	DDR0_DQ12
D11	DVSS
D12	GPIOD_6
D14	GPIOD_10
D15	GPIOE_2
D17	GPIOX_19
D18	GPIOX_12
D20	GPIOX_3
D21	GPIOX_0
D23	PCIE_CLK_P
D24	PCIE_RXP
D26	USB_B_OTG_ID
D27	GPIOM_9
D28	USB_B_OTG_DP
D30	CSI_C_D3P
D31	CSI_C_D3N
D32	CSI_A_D0N
D33	DVSS
E1	DVSS
E2	DDR0_AC_0
E3	DDR0_AC_15
E5	DDR0_AC_35
E7	DVSS
E8	DDR0_DQ10
E9	DVSS
E10	DVSS
E11	GPIOD_8
E12	GPIOD_7
E13	DVSS
E14	GPIOD_3
E15	GPIOE_1
E16	DVSS
E17	GPIOX_18
E18	GPIOX_14

BALL #	NET NAME
E19	DVSS
E20	GPIOX_6
E21	GPIOX_1
E22	DVSS
E23	POR_OUT
E24	PCIE_TXN
E25	DVSS
E26	DVSS
E27	GPIOM_8
E29	DVSS
E31	GPIOM_11
E32	GPIOM_13
E33	GPIOM_12
F2	DDR0_AC_1
F3	DDR0_AC_5
F4	DDR0_AC_11
F5	DDR0_AC_34
F6	DVSS
F8	DDR0_PZQ
F9	VDDIO_D
F11	GPIOD_2
F12	GPIOD_12
F14	TEST_N
F15	RESET_N
F17	GPIOE_6
F18	GPIOE_5
F20	AVDD33_POR
F21	USB_A_OTG_VBUS
F23	DVSS
F24	PCIE_TXP
F26	DVSS
F28	CSI_C_D2P
F29	CSI_C_D2N
F30	CSI_C_CLKP
F31	CSI_C_CLKN
F32	GPIOM_10

Amlogic Proprietary and Confidential
Copyright © Amlogic. All rights reserved.

BALL #	NET NAME
G1	DDR0_AC_2
G2	DVSS
G3	DDR0_AC_4
G4	DDR0_AC_24
G5	DDR0_AC_25
G6	DDR0_PVREF
G8	DVSS
G9	VDDQ
G10	DVSS
G11	DVSS
G12	VDDCPU_A
G13	DVSS
G14	DVSS
G15	DVSS
G16	VDD18_AO
G17	DVSS
G18	VDDIO_X
G19	DVSS
G20	DVSS
G21	GPIOX_17
G22	DVSS
G23	DVSS
G24	DVSS
G25	DVSS
G26	DVSS
G28	CSI_C_D0N
G29	CSI_C_D0P
G30	CSI_C_D1P
G31	CSI_C_D1N
G32	GPIOM_7
G33	GPIOM_6
H1	DVSS
H2	DDR0_AC_31
H3	DDR0_AC_3
H5	DVSS
H8	VDDQ
H9	DVSS

BALL #	NET NAME
H10	VDD_DDR
H11	DVSS
H12	VDDCPU_A
H13	VDDCPU_A
H14	DVSS
H15	VDDCPU_A
H16	VDDIO_E
H17	DVSS
H18	DVSS
H19	DVSS
H20	DVSS
H21	USB_A_OTG_ID
H22	AVDD0V8_USB_PCIE
H23	DVSS
H24	AVDD33_USB
H25	AVDD18_MCLK
H26	DVSS
H29	DVSS
H31	GPIOM_1
H32	GPIOM_5
H33	GPIOM_4
J2	DDR0_AC_29
J3	DDR0_AC_33
J4	DDR0_AC_6
J5	DDR0_AC_26
J6	DDR0_AC_36
J8	DVSS
J9	DVSS
J10	DVSS
J11	VDD_DDR
J12	VDDCPU_A
J13	DVSS
J14	DVSS
J15	VDDCPU_A
J16	DVSS
J17	DVSS
J18	DVSS

BALL #	NET NAME
J19	VDD_EE
J20	VDD_EE
J21	DVSS
J22	DVSS
J23	DVSS
J24	DVSS
J25	AVDD18_USB_PCIE
J26	DVSS
J28	GPIOT_15
J29	GPIOT_12
J30	GPIOM_2
J31	GPIOM_0
J32	GPIOM_3
K1	DDR0_AC_30
K2	DVSS
K3	DDR0_AC_21
K4	DDR0_AC_20
K5	DDR0_AC_28
K6	DDR0_AC_38
K8	DVSS
K9	VDDQ
K10	DVSS
K11	DVSS
K12	VDDCPU_A
K13	VDDCPU_A
K14	DVSS
K15	VDDCPU_A
K16	VDDCPU_A
K17	AVDD18_PLL
K18	DVSS
K19	VDD_EE
K20	VDD_EE
K21	VDD_EE
K22	DVSS
K23	DVSS
K24	USB_B_OTG_VBUS
K25	DVSS

Amlogic Proprietary and Confidential
Copyright © Amlogic. All rights reserved.

BALL #	NET NAME
K26	DVSS
K28	GPIOT_16
K29	GPIOT_17
K30	GPIOT_5
K31	GPIOT_8
K32	GPIOT_11
K33	GPIOT_7
L1	DVSS
L2	DDR0_DQM2
L3	DDR0_AC_32
L5	DVSS
L8	VDDQ
L9	DVSS
L10	VDD_DDR
L11	DVSS
L12	VDDCPU_A
L13	DVSS
L14	DVSS
L15	VDDCPU_A
L16	DVSS
L17	AVSS_PLL
L18	DVSS
L19	DVSS
L20	DVSS
L21	DVSS
L22	AVDD0V8_CSI
L23	DVSS
L24	DVSS
L25	VDDIO_M
L26	DVSS
L29	DVSS
L31	DVSS
L32	GPIOT_19
L33	GPIOT_6
M2	DDR0_DQ20
M3	DDR0_DQ17
M4	DDR0_AC_22
M5	DDR0_AC_23
M6	VDDQLP
M8	DVSS
M9	DVSS
M10	DVSS
M11	VDD_DDR
M12	VDDCPU_A
M13	VDDCPU_A
M14	DVSS
M15	VDDCPU_A
M16	VDDCPU_A
M17	DVSS
M18	VDD_GPU
M19	VDD_GPU
M20	VDD_GPU
M21	VDD_GPU
M22	VDD_GPU
M23	VDD_GPU
M24	DVSS
M25	AVDD18_CSI
M26	DVSS
M28	GPIOT_13
M29	GPIOT_14
M30	GPIOT_20
M31	GPIOT_21
M32	GPIOT_9
N1	DDR0_DQ21
N2	DVSS
N3	DDR0_DQ16
N4	DDR0_DQ19
N5	DDR0_DQ23
N6	DVSS
N8	AVDD_DDR0PLL
N9	VDDQ
N10	DVSS
N11	DVSS
N12	VDDCPU_A
N13	DVSS
N14	DVSS
N15	VDDCPU_A
N16	DVSS
N17	DVSS
N18	VDD_GPU
N19	DVSS
N20	VDD_GPU
N21	DVSS
N22	VDD_GPU
N23	DVSS
N24	DVSS
N25	DVSS
N26	DVSS
N28	GPIOT_18
N29	GPIOT_2
N30	GPIOT_23
N31	GPIOT_22
N32	GPIOT_10
N33	GPIOT_3
P1	DVSS
P2	DDR0_DQ22
P3	DDR0_DQ18
P5	DVSS
P8	VDDQ
P9	DVSS
P10	VDD_DDR
P11	DVSS
P12	VDDCPU_A
P13	VDDCPU_A
P14	DVSS
P15	VDDCPU_A
P16	VDDCPU_A
P17	DVSS
P18	DVSS
P19	DVSS

Amlogic Proprietary and Confidential
Copyright © Amlogic. All rights reserved.

BALL #	NET NAME
P20	DVSS
P21	DVSS
P22	DVSS
P23	DVSS
P24	VDD_GPU
P25	DVSS
P26	DVSS
P29	DVSS
P31	GPIOT_4
P32	GPIOT_0
P33	GPIOT_1
R2	DDR0_DQ24
R3	DDR0_DQSP2
R4	DDR0_DQSN2
R5	DVSS
R6	DDR0_AC_37
R8	DVSS
R9	DVSS
R10	DVSS
R11	VDD_DDR
R12	VDDCPU_A
R13	DVSS
R14	DVSS
R15	VDDCPU_A
R16	DVSS
R17	DVSS
R18	VDD_GPU
R19	VDD_GPU
R20	VDD_GPU
R21	VDD_GPU
R22	VDD_GPU
R23	VDD_GPU
R24	DVSS
R25	VDDIO_T
R26	DVSS
R28	GPIOH_0
R29	GPIOH_1

BALL #	NET NAME
R30	GPIOH_2
R31	GPIOH_3
R32	GPIOH_4
T1	DDR0_DQ27
T2	DVSS
T3	DDR0_DQSP3
T4	DDR0_DQSN3
T5	DVSS
T6	VDDQLP
T8	DVSS
T9	VDDQ
T10	DVSS
T11	DVSS
T12	VDDCPU_A
T13	VDDCPU_A
T14	DVSS
T15	VDDCPU_A
T16	VDDCPU_A
T17	DVSS
T18	VDD_GPU
T19	DVSS
T20	VDD_GPU
T21	DVSS
T22	VDD_GPU
T23	DVSS
T24	DVSS
T25	DVSS
T26	DVSS
T28	VDDIO_Z
T29	GPIOH_5
T30	GPIOH_6
T31	GPIOH_7
T32	GPIOC_2
T33	GPIOC_3
U1	DVSS
U2	DDR0_DQ25
U3	DDR0_DQ26

BALL #	NET NAME
U5	VDDQLP
U8	VDDQ
U9	DVSS
U10	VDD_DDR
U11	DVSS
U12	DVSS
U13	DVSS
U14	DVSS
U15	DVSS
U16	DVSS
U17	DVSS
U18	DVSS
U19	DVSS
U20	DVSS
U21	DVSS
U22	DVSS
U23	DVSS
U24	DVSS
U25	DVSS
U26	VDDIO_C
U29	DVSS
U31	GPIOC_5
U32	DVSS
U33	GPIOC_4
V2	DDR0_DQM3
V3	DDR0_DQ30
V4	DDR0_DQ29
V5	DDR0_DQ28
V6	DVSS
V8	DVSS
V9	DVSS
V10	DVSS
V11	VDD_DDR
V12	DVSS
V13	DVSS
V14	VDD_EE
V15	DVSS
V16	VDD_EE

Amlogic Proprietary and Confidential
Copyright © Amlogic. All rights reserved.

BALL #	NET NAME
V17	DVSS
V18	DVSS
V19	VDD_NPU
V20	VDD_NPU
V21	VDD_NPU
V22	VDD_NPU
V23	VDD_NPU
V24	DVSS
V25	VDDIO_H
V26	DVSS
V28	GPIOZ_6
V29	GPIOZ_13
V30	GPIOZ_11
V31	GPIOZ_12
V32	GPIOC_0
W1	DDR1_DQM3
W2	DVSS
W3	DDR0_DQ31
W4	DDR1_DQ29
W5	DDR1_DQ30
W6	DDR1_AC_38
W8	VDDQLP
W9	VDDQLP
W10	DVSS
W11	DVSS
W12	DVSS
W13	VDD_EE
W14	VDD_EE
W15	VDD_EE
W16	VDD_EE
W17	VDD_EE
W18	DVSS
W19	VDD_NPU
W20	DVSS
W21	VDD_NPU
W22	DVSS

BALL #	NET NAME
W23	VDD_NPU
W24	DVSS
W25	DVSS
W26	DVSS
W28	DVSS
W29	GPIOZ_8
W30	GPIOZ_9
W31	GPIOZ_10
W32	GPIOC_1
W33	GPIOC_6
Y1	DVSS
Y2	DDR1_DQ31
Y3	DDR1_DQ28
Y5	DVSS
Y8	DVSS
Y9	DVSS
Y10	DVSS
Y11	VDD_DDR
Y12	DVSS
Y13	DVSS
Y14	DVSS
Y15	DVSS
Y16	DVSS
Y17	DVSS
Y18	DVSS
Y19	DVSS
Y20	DVSS
Y21	DVSS
Y22	DVSS
Y23	DVSS
Y24	DVSS
Y25	AVDD18_SARADC
Y26	DVSS
Y29	DVSS
Y31	DVSS
Y32	ENET_TXN
Y33	ENET_TXP

BALL #	NET NAME
AA2	DDR1_DQ27
AA3	DDR1_DQ25
AA4	DDR1_DQ26
AA5	DVSS
AA6	DDR1_AC_36
AA8	VDDQ
AA9	DVSS
AA10	VDD_DDR
AA11	DVSS
AA12	VDDCPU_B
AA13	VDDCPU_B
AA14	DVSS
AA15	VDDCPU_B
AA16	VDDCPU_B
AA17	DVSS
AA18	DVSS
AA19	VDD_NPU
AA20	VDD_NPU
AA21	VDD_NPU
AA22	VDD_NPU
AA23	VDD_NPU
AA24	VDD_NPU
AA25	ENET_ATP
AA26	DVSS
AA28	GPIOZ_7
AA29	GPIOZ_5
AA30	GPIOZ_3
AA31	GPIOZ_4
AA32	ENET_RXP
AB1	DDR1_DQ24
AB2	DVSS
AB3	DDR1_DQSN3
AB4	DDR1_DQSP3
AB5	DVSS
AB6	DDR1_AC_37
AB8	VDDQLP

Amlogic Proprietary and Confidential
Copyright © Amlogic. All rights reserved.

BALL #	NET NAME
AB9	VDDQ
AB10	DVSS
AB11	DVSS
AB12	VDDCPU_B
AB13	DVSS
AB14	DVSS
AB15	VDDCPU_B
AB16	DVSS
AB17	DVSS
AB18	DVSS
AB19	VDD_NPU
AB20	DVSS
AB21	VDD_NPU
AB22	DVSS
AB23	VDD_NPU
AB24	DVSS
AB25	AVDD18_ENET
AB26	DVSS
AB28	ENET_EXTRES
AB29	GPIOZ_0
AB30	GPIOZ_1
AB31	GPIOZ_2
AB32	ENET_RXN
AB33	DVSS
AC1	DVSS
AC2	DDR1_DQ23
AC3	DDR1_DQ20
AC5	VDDQLP
AC8	DVSS
AC9	DVSS
AC10	DVSS
AC11	VDD_DDR
AC12	VDDCPU_B
AC13	VDDCPU_B
AC14	DVSS
AC15	VDDCPU_B
AC16	VDDCPU_B

BALL #	NET NAME
AC17	DVSS
AC18	DVSS
AC19	DVSS
AC20	DVSS
AC21	DVSS
AC22	DVSS
AC23	DVSS
AC24	DVSS
AC25	DVSS
AC26	DVSS
AC29	DVSS
AC31	AU_AIL1
AC32	AU_AIL2
AC33	AU_AIR1
AD2	DDR1_DQ21
AD3	DDR1_DQSN2
AD4	DDR1_DQSP2
AD5	DVSS
AD6	VDDQLP
AD8	VDDQ
AD9	DVSS
AD10	VDD_DDR
AD11	DVSS
AD12	VDDCPU_B
AD13	DVSS
AD14	DVSS
AD15	VDDCPU_B
AD16	DVSS
AD17	DVSS
AD18	VDD_EE
AD19	DVSS
AD20	VDD_EE
AD21	VDD_NPU
AD22	DVSS
AD23	VDD_NPU
AD24	DVSS
AD25	DVSS

BALL #	NET NAME
AD26	AU_VMID
AD28	SARADC_CH6
AD29	SARADC_CH3
AD30	SARADC_CH2
AD31	SARADC_CH0
AD32	AU_AIR2
AE1	DDR1_DQ19
AE2	DVSS
AE3	DDR1_DQ22
AE4	DDR1_DQ16
AE5	DDR1_AC_29
AE6	DDR1_AC_34
AE8	AVDD_DDR1PLL
AE9	VDDQ
AE10	DVSS
AE11	DVSS
AE12	VDDCPU_B
AE13	VDDCPU_B
AE14	DVSS
AE15	VDDCPU_B
AE16	VDDCPU_B
AE17	DVSS
AE18	VDD_EE
AE19	VDD_EE
AE20	VDD_EE
AE21	VDD_NPU
AE22	VDD_NPU
AE23	VDD_NPU
AE24	DVSS
AE25	AVDD18_AUDIO
AE26	AVSS_AUDIO
AE28	AU_REFP
AE29	SARADC_CH1
AE30	AU_LO1L
AE31	AU_LO1R
AE32	DVSS

Amlogic Proprietary and Confidential
Copyright © Amlogic. All rights reserved.

BALL #	NET NAME
AE33	GPIOW_14
AF1	DVSS
AF2	DDR1_DQ17
AF3	DDR1_DQM2
AF5	DVSS
AF8	DVSS
AF9	DVSS
AF10	DVSS
AF11	VDD_DDR
AF12	VDDCPU_B
AF13	DVSS
AF14	DVSS
AF15	DVSS
AF16	DVSS
AF17	DVSS
AF18	DVSS
AF19	DVSS
AF20	DVSS
AF21	DVSS
AF22	DVSS
AF23	DVSS
AF24	DVSS
AF25	DVSS
AF26	DVSS
AF29	DVSS
AF31	GPIOW_13
AF32	GPIOW_12
AF33	GPIOW_4
AG2	DDR1_DQ18
AG3	DDR1_AC_31
AG4	DDR1_AC_30
AG5	DDR1_AC_32
AG6	DDR1_AC_35
AG8	VDDQ
AG9	DVSS
AG10	VDD_DDR
AG11	DVSS

BALL #	NET NAME
AG12	VDDCPU_B
AG13	VDDCPU_B
AG14	DVSS
AG15	DVSS
AG16	DVSS
AG17	DVSS
AG18	DVSS
AG19	VDD_EE
AG20	DVSS
AG21	VDD_EE
AG22	DVSS
AG23	VDD_EE
AG24	DVSS
AG25	DVSS
AG26	DVSS
AG28	GPIOW_3
AG29	GPIOW_2
AG30	GPIOW_9
AG31	GPIOW_8
AG32	GPIOW_15
AH1	DDR1_AC_33
AH2	DVSS
AH3	DDR1_AC_25
AH4	DDR1_AC_24
AH5	DVSS
AH6	DDR1_AC_15
AH8	DVSS
AH9	VDDQ
AH10	DVSS
AH11	DVSS
AH12	DVSS
AH13	DVSS
AH14	DVSS
AH15	DVSS
AH16	DVSS
AH17	DVSS
AH18	DVSS

BALL #	NET NAME
AH19	VDD_EE
AH20	VDD_EE
AH21	VDD_EE
AH22	VDD_EE
AH23	VDD_EE
AH24	DVSS
AH25	AVDD18_HDMITX_ EARCRX
AH26	DVSS
AH28	GPIOW_0
AH29	GPIOW_10
AH30	GPIOW_11
AH31	GPIOW_16
AH32	GPIOW_7
AH33	GPIOW_6
AJ1	DVSS
AJ2	DDR1_AC_22
AJ3	DDR1_AC_28
AJ5	DVSS
AJ8	DVSS
AJ9	DVSS
AJ10	DVSS
AJ11	VDD_DDR
AJ12	DVSS
AJ13	AVDD08_DP
AJ14	AVDD18_DP
AJ15	AVDD18_DP
AJ16	DVSS
AJ17	VDDIO_Y
AJ18	DVSS
AJ19	DVSS
AJ20	DVSS
AJ21	AVDD33_HDMITX
AJ22	DVSS
AJ23	DVSS
AJ24	DVSS
AJ25	DVSS

Amlogic Proprietary and Confidential
Copyright © Amlogic. All rights reserved.

BALL #	NET NAME
AJ26	AVSS_HPLL
AJ29	DVSS
AJ31	DVSS
AJ32	HDMITX_D2P
AJ33	HDMITX_REXT
AK2	DDR1_AC_23
AK3	DDR1_AC_4
AK4	DDR1_AC_5
AK5	DVSS
AK6	DDR1_PVREF
AK8	VDDQ
AK9	DVSS
AK10	VDD_DDR
AK11	DVSS
AK12	DVSS
AK13	AVDD08_DP
AK14	DVSS
AK15	DVSS
AK16	DVSS
AK17	DVSS
AK18	VDD18_AO
AK19	DVSS
AK20	DVSS
AK21	DVSS
AK22	DVSS
AK23	AVDD08_HDMIRX
AK24	AVDD33_HDMIRX
AK25	AVDD18_HDMIRX_ EARCTX
AK26	DVSS
AK28	HDMITX_ARCRXP
AK29	HDMITX_ARCRXN
AK30	HDMIRX_C_D2N
AK31	HDMIRX_C_D2P
AK32	HDMITX_D2N
AL1	DDR1_AC_20
AL2	DVSS

BALL #	NET NAME
AL3	DDR1_AC_9
AL4	DDR1_AC_12
AL5	DDR1_AC_1
AL6	DDR1_RST
AL8	DVSS
AL9	VDDQ
AL10	AVSS_DP
AL11	AVDD18_DDR_DP_PLL
AL12	DVSS
AL13	DVSS
AL14	DVSS
AL15	DVSS
AL16	VX1_LPP
AL17	VX1_LPN
AL18	DVSS
AL19	VX1_ATP
AL20	DVSS
AL21	DVSS
AL22	DVSS
AL23	DVSS
AL24	DVSS
AL25	AVDD08_HDMITX
AL26	DVSS
AL28	HDMIRX_C_D0N
AL29	HDMIRX_C_D0P
AL30	HDMIRX_C_D1N
AL31	HDMIRX_C_D1P
AL32	HDMITX_D1P
AL33	HDMITX_D1N
AM1	DDR1_AC_21
AM2	DVSS
AM3	DDR1_AC_13
AM5	DVSS
AM8	DVSS
AM9	DVSS
AM11	DVSS
AM12	VX1_B_4P

BALL #	NET NAME
AM14	GPIOY_1
AM15	VX1_A_5N
AM17	GPIOY_0
AM18	VX1_A_0N
AM20	GPIOY_4
AM21	GPIOB_3
AM23	VDDIO_B
AM24	GPIOB_12
AM26	DVSS
AM29	DVSS
AM31	DVSS
AM32	HDMITX_D0P
AM33	DVSS
AN2	DDR1_AC_8
AN3	DDR1_AC_0
AN4	DDR1_AC_6
AN5	DVSS
AN6	DDR1_DQ2
AN7	DDR1_PZQ
AN8	DDR1_DQ14
AN9	DVSS
AN10	VX1_B_7P
AN11	VX1_B_7N
AN12	VX1_B_4N
AN13	DVSS
AN14	GPIOY_2
AN15	VX1_A_5P
AN16	DVSS
AN17	DVSS
AN18	VX1_A_0P
AN19	DVSS
AN20	GPIOY_3
AN21	GPIOB_2
AN22	DVSS
AN23	GPIOB_10
AN24	GPIOB_11

Amlogic Proprietary and Confidential
Copyright © Amlogic. All rights reserved.

BALL #	NET NAME
AN25	DVSS
AN26	DVSS
AN27	GPIOW_1
AN28	GPIOW_5
AN29	DVSS
AN30	HDMIRX_C_CLKN
AN31	HDMIRX_C_CLKP
AN32	HDMITX_D0N
AP1	DDR1_AC_2
AP2	DVSS
AP3	DDR1_AC_3
AP4	DDR1_DQ1
AP6	DDR1_DQ3
AP7	DDR1_DQM1
AP8	DDR1_DQ13
AP10	DVSS
AP11	VX1_B_6N
AP12	VX1_B_5N
AP14	VX1_B_1P
AP15	VX1_A_7P
AP17	VX1_A_3P
AP18	VX1_A_1P
AP20	GPIOB_1
AP21	GPIOB_0
AP23	GPIOB_5
AP24	GPIOB_7
AP26	GPIOB_8
AP27	HDMIRX_ARCTXN
AP28	HDMIRX_B_CLKP
AP29	HDMIRX_B_D0N
AP30	HDMIRX_B_D0P
AP31	DVSS
AP32	HDMITX_CLKP
AP33	HDMITX_CLKN
AR1	DDR1_AC_10
AR2	DDR1_AC_7

BALL #	NET NAME
AR3	DDR1_AC_26
AR4	DDR1_DQ7
AR6	DDR1_DQM0
AR7	DDR1_DQ12
AR8	DDR1_DQ9
AR9	DDR1_DQ10
AR10	DVSS
AR11	VX1_B_6P
AR12	VX1_B_5P
AR13	DVSS
AR14	VX1_B_1N
AR15	VX1_A_7N
AR16	DVSS
AR17	VX1_A_3N
AR18	VX1_A_1N
AR19	DVSS
AR20	GPIOY_8
AR21	GPIOY_9
AR22	DVSS
AR23	GPIOB_4
AR24	GPIOB_6
AR25	DVSS
AR26	GPIOB_9
AR27	HDMIRX_ARCTXP
AR28	HDMIRX_B_CLKN
AR30	HDMIRX_B_D1N
AR31	HDMIRX_B_D1P
AR32	HDMIRX_B_D2P
AR33	HDMIRX_A_D2P
AT1	DDR1_AC_11
AT2	DDR1_AC_14
AT3	DVSS
AT4	DDR1_DQ6
AT5	DDR1_DQ4
AT6	DDR1_DQSN0
AT7	DDR1_DQSP1

BALL #	NET NAME
AT8	DDR1_DQSN1
AT9	DVSS
AT10	DDR1_DQ11
AT11	DDR1_DQ15
AT12	DVSS
AT13	VX1_B_3N
AT14	VX1_B_2P
AT15	VX1_B_2N
AT16	VX1_A_6P
AT17	VX1_A_6N
AT18	VX1_A_4P
AT19	VX1_A_2P
AT20	DVSS
AT21	GPIOY_5
AT22	GPIOY_7
AT23	GPIOY_11
AT24	GPIOY_12
AT25	GPIOY_13
AT26	GPIOY_14
AT27	GPIOY_18
AT28	DVSS
AT29	HDMIRX_A_D0N
AT30	HDMIRX_A_D0P
AT31	DVSS
AT32	HDMIRX_B_D2N
AT33	HDMIRX_A_D2N
AU1	DVSS
AU2	DDR1_DQ0
AU3	DDR1_DQ5
AU5	DVSS
AU6	DDR1_DQSP0
AU7	DVSS
AU9	DDR1_DQ8
AU10	DVSS
AU12	DIF_REXT
AU13	VX1_B_3P

Amlogic Proprietary and Confidential
Copyright © Amlogic. All rights reserved.

BALL #	NET NAME
AU15	VX1_B_0P
AU16	VX1_B_0N
AU18	VX1_A_4N
AU19	VX1_A_2N
AU21	GPIOY_6
AU22	GPIOY_10

BALL #	NET NAME
AU24	GPIOY_16
AU25	GPIOY_15
AU27	GPIOY_17
AU28	HDMIRX_A_CLKN
AU29	HDMIRX_A_CLKP
AU31	HDMIRX_A_D1N

BALL #	NET NAME
AU32	HDMIRX_A_D1P
AU33	DVSS

4.3 Pin Description

The pin assignments are described in the following table.

Table 4-1 Pin Assignments

Net Name	Type	Default Pull Up/Dn	Description	Power Domain	If Unused
Audio					
AU_AIL1	AI	-	Audio line in, left channel of port 1	AVDD18_ AUDIO	NC
AU_AIL2	AI	-	Audio line in, left channel of port 2	AVDD18_ AUDIO	NC
AU_AIR1	AI	-	Audio line in, right channel of port 1	AVDD18_ AUDIO	NC
AU_AIR2	AI	-	Audio line in, right channel of port 2	AVDD18_ AUDIO	NC
AU_LO1L	AO	-	Audio line out, left channel of port 1	AVDD18_ AUDIO	NC
AU_LO1R	AO	-	Audio line out, right channel of port 1	AVDD18_ AUDIO	NC
AU_REFP	A	-	Audio ADC/DAC positive reference voltage	AVDD18_ AUDIO	NC
AU_VMID	A	-	MID voltage of audio ADC/DAC	AVDD18_ AUDIO	NC
AVSS_ AUDIO	AP	-	Analog ground for Audio ADC/DAC	-	To VSS
AVDD18_ AUDIO	AP	-	Analog 1.8V for Audio Audio ADC/DAC	-	To 1.8V
MIPI CSI					
CSI_A_ CLKN	AI	-	MIPI CSI CLK negative input for channel A	AVDD18_ CSI	NC
CSI_A_ CLKP	AI	-	MIPI CSI CLK positive input for channel A	AVDD18_ CSI	NC
CSI_A_D0N	AIO	-	MIPI CSI channel A data 0 negative input	AVDD18_ CSI	NC
CSI_A_D0P	AIO	-	MIPI CSI channel A data 0 positive input	AVDD18_ CSI	NC
CSI_A_D1N	AIO	-	MIPI CSI channel A data 1 negative input	AVDD18_ CSI	NC

Amlogic Proprietary and Confidential
Copyright © Amlogic. All rights reserved.

Net Name	Type	Default Pull Up/Dn	Description	Power Domain	If Unused
CSI_A_D1P	AIO	-	MIPI CSI channel A data 1 positive input	AVDD18_ CSI	NC
CSI_A_D2N	AIO	-	MIPI CSI channel A data 2 or channel B data0 negative input	AVDD18_ CSI	NC
CSI_A_D2P	AIO	-	MIPI CSI channel A data 2 or channel B data0 positive input	AVDD18_ CSI	NC
CSI_A_D3N	AIO	-	MIPI CSI channel A data 3 or channel B data1 negative input	AVDD18_ CSI	NC
CSI_A_D3P	AIO	-	MIPI CSI channel A data 3 or channel B data1 positive input	AVDD18_ CSI	NC
CSI_B_ CLKN	AI	-	MIPI CSI CLK negative input for channel B	AVDD18_ CSI	NC
CSI_B_ CLKP	AI	-	MIPI CSI CLK positive input for channel B	AVDD18_ CSI	NC
CSI_C_ CLKN	AI	-	MIPI CSI CLK negative input for channel C	AVDD18_ CSI	NC
CSI_C_ CLKP	AI	-	MIPI CSI CLK positive input for channel C	AVDD18_ CSI	NC
CSI_C_D0N	AIO	-	MIPI CSI channel C data 0 negative input	AVDD18_ CSI	NC
CSI_C_D0P	AIO	-	MIPI CSI channel C data 0 positive input	AVDD18_ CSI	NC
CSI_C_D1N	AIO	-	MIPI CSI channel C data 1 negative input	AVDD18_ CSI	NC
CSI_C_D1P	AIO	-	MIPI CSI channel C data 1 positive input	AVDD18_ CSI	NC
CSI_C_D2N	AIO	-	MIPI CSI channel C data 2 or channel D data0 negative input	AVDD18_ CSI	NC
CSI_C_D2P	AIO	-	MIPI CSI channel C data 2 or channel D data0 positive input	AVDD18_ CSI	NC
CSI_C_D3N	AIO	-	MIPI CSI channel C data 3 or channel D data1 negative input	AVDD18_ CSI	NC
CSI_C_D3P	AIO	-	MIPI CSI channel C data 3 or channel D data1 positive input	AVDD18_ CSI	NC
CSI_D_ CLKN	AI	-	MIPI CSI CLK negative input for channel D	AVDD18_ CSI	NC
CSI_D_ CLKP	AI	-	MIPI CSI CLK positive input for channel D	AVDD18_ CSI	NC
AVDD0V8_ CSI	AP	-	Analog Power supply 0.8V for MIPI CSI	-	To 0.8V
AVDD18_ CSI	AP	-	Analog 1.8V power supply for MIPI CSI	-	To 1.8V
DDR0					
DDR0_AC_ 0	DO	-	DDR PHY0 address/command/control signal bit 0	VDDQ	NC
DDR0_AC_ 1	DO	-	DDR PHY0 address/command/control signal bit 1	VDDQ	NC

Amlogic Proprietary and Confidential
Copyright © Amlogic. All rights reserved.

Net Name	Type	Default Pull Up/Dn	Description	Power Domain	If Unused
DDR0_AC_2	DO	-	DDR PHY0 address/command/control signal bit 2	VDDQ	NC
DDR0_AC_3	DO	-	DDR PHY0 address/command/control signal bit 3	VDDQ	NC
DDR0_AC_4	DO	-	DDR PHY0 address/command/control signal bit 4	VDDQ	NC
DDR0_AC_5	DO	-	DDR PHY0 address/command/control signal bit 5	VDDQ	NC
DDR0_AC_6	DO	-	DDR PHY0 address/command/control signal bit 6	VDDQ	NC
DDR0_AC_7	DO	-	DDR PHY0 address/command/control signal bit 7	VDDQ	NC
DDR0_AC_8	DO	-	DDR PHY0 address/command/control signal bit 8	VDDQ	NC
DDR0_AC_9	DO	-	DDR PHY0 address/command/control signal bit 9	VDDQ	NC
DDR0_AC_10	DO	-	DDR PHY0 address/command/control signal bit 10	VDDQ	NC
DDR0_AC_11	DO	-	DDR PHY0 address/command/control signal bit 11	VDDQ	NC
DDR0_AC_12	DO	-	DDR PHY0 address/command/control signal bit 12	VDDQ	NC
DDR0_AC_13	DO	-	DDR PHY0 address/command/control signal bit 13	VDDQ	NC
DDR0_AC_14	DO	-	DDR PHY0 address/command/control signal bit 14	VDDQ	NC
DDR0_AC_15	DO	-	DDR PHY0 address/command/control signal bit 15	VDDQ	NC
DDR0_AC_20	DO	-	DDR PHY0 address/command/control signal bit 20	VDDQ	NC
DDR0_AC_21	DO	-	DDR PHY0 address/command/control signal bit 21	VDDQ	NC
DDR0_AC_22	DO	-	DDR PHY0 address/command/control signal bit 22	VDDQ	NC
DDR0_AC_23	DO	-	DDR PHY0 address/command/control signal bit 23	VDDQ	NC
DDR0_AC_24	DO	-	DDR PHY0 address/command/control signal bit 24	VDDQ	NC
DDR0_AC_25	DO	-	DDR PHY0 address/command/control signal bit 25	VDDQ	NC
DDR0_AC_26	DO	-	DDR PHY0 address/command/control signal bit 26	VDDQ	NC
DDR0_AC_28	DO	-	DDR PHY0 address/command/control signal bit 28	VDDQ	NC
DDR0_AC_29	DO	-	DDR PHY0 address/command/control signal bit 29	VDDQ	NC
DDR0_AC_30	DO	-	DDR PHY0 address/command/control signal bit 30	VDDQ	NC

Amlogic Proprietary and Confidential
Copyright © Amlogic. All rights reserved.

Net Name	Type	Default Pull Up/Dn	Description	Power Domain	If Unused
DDR0_AC_31	DO	-	DDR PHY0 address/command/control signal bit 31	VDDQ	NC
DDR0_AC_32	DO	-	DDR PHY0 address/command/control signal bit 32	VDDQ	NC
DDR0_AC_33	DO	-	DDR PHY0 address/command/control signal bit 33	VDDQ	NC
DDR0_AC_34	DO	-	DDR PHY0 address/command/control signal bit 34	VDDQ	NC
DDR0_AC_35	DO	-	DDR PHY0 address/command/control signal bit 35	VDDQ	NC
DDR0_AC_36	DO	-	DDR PHY0 address/command/control signal bit 36	VDDQ	NC
DDR0_AC_37	DO	-	DDR PHY0 address/command/control signal bit 37	VDDQ	NC
DDR0_AC_38	DO	-	DDR PHY0 address/command/control signal bit 38	VDDQ	NC
DDR0_DQ0	DIO	-	DRAM0 data bus bit 0	VDDQ	To DRAM0
DDR0_DQ1	DIO	-	DRAM0 data bus bit 1	VDDQ	To DRAM0
DDR0_DQ2	DIO	-	DRAM0 data bus bit 2	VDDQ	To DRAM0
DDR0_DQ3	DIO	-	DRAM0 data bus bit 3	VDDQ	To DRAM0
DDR0_DQ4	DIO	-	DRAM0 data bus bit 4	VDDQ	To DRAM0
DDR0_DQ5	DIO	-	DRAM0 data bus bit 5	VDDQ	To DRAM0
DDR0_DQ6	DIO	-	DRAM0 data bus bit 6	VDDQ	To DRAM0
DDR0_DQ7	DIO	-	DRAM0 data bus bit 7	VDDQ	To DRAM0
DDR0_DQ8	DIO	-	DRAM0 data bus bit 8	VDDQ	To DRAM0
DDR0_DQ9	DIO	-	DRAM0 data bus bit 9	VDDQ	To DRAM0
DDR0_DQ10	DIO	-	DRAM0 data bus bit 10	VDDQ	To DRAM0
DDR0_DQ11	DIO	-	DRAM0 data bus bit 11	VDDQ	To DRAM0
DDR0_DQ12	DIO	-	DRAM0 data bus bit 12	VDDQ	To DRAM0
DDR0_DQ13	DIO	-	DRAM0 data bus bit 13	VDDQ	To DRAM0
DDR0_DQ14	DIO	-	DRAM0 data bus bit 14	VDDQ	To DRAM0
DDR0_DQ15	DIO	-	DRAM0 data bus bit 15	VDDQ	To DRAM0

Amlogic Proprietary and Confidential
Copyright © Amlogic. All rights reserved.

Net Name	Type	Default Pull Up/Dn	Description	Power Domain	If Unused
DDR0_DQ16	DIO	-	DRAM0 data bus bit 16	VDDQ	NC
DDR0_DQ17	DIO	-	DRAM0 data bus bit 17	VDDQ	NC
DDR0_DQ18	DIO	-	DRAM0 data bus bit 18	VDDQ	NC
DDR0_DQ19	DIO	-	DRAM0 data bus bit 19	VDDQ	NC
DDR0_DQ20	DIO	-	DRAM0 data bus bit 20	VDDQ	NC
DDR0_DQ21	DIO	-	DRAM0 data bus bit 21	VDDQ	NC
DDR0_DQ22	DIO	-	DRAM0 data bus bit 22	VDDQ	NC
DDR0_DQ23	DIO	-	DRAM0 data bus bit 23	VDDQ	NC
DDR0_DQ24	DIO	-	DRAM0 data bus bit 24	VDDQ	NC
DDR0_DQ25	DIO	-	DRAM0 data bus bit 25	VDDQ	NC
DDR0_DQ26	DIO	-	DRAM0 data bus bit 26	VDDQ	NC
DDR0_DQ27	DIO	-	DRAM0 data bus bit 27	VDDQ	NC
DDR0_DQ28	DIO	-	DRAM0 data bus bit 28	VDDQ	NC
DDR0_DQ29	DIO	-	DRAM0 data bus bit 29	VDDQ	NC
DDR0_DQ30	DIO	-	DRAM0 data bus bit 30	VDDQ	NC
DDR0_DQ31	DIO	-	DRAM0 data bus bit 31	VDDQ	NC
DDR0_DQM0	DIO	-	DRAM0 data mask 0	VDDQ	To DRAM0
DDR0_DQM1	DIO	-	DRAM0 data mask 1	VDDQ	To DRAM0
DDR0_DQM2	DIO	-	DRAM0 data mask 2	VDDQ	NC
DDR0_DQM3	DIO	-	DRAM0 data mask 3	VDDQ	NC
DDR0_DQSN0	DIO	-	DRAM0 data strobe 0 complementary	VDDQ	To DRAM0
DDR0_DQSN1	DIO	-	DRAM0 data strobe 1 complementary	VDDQ	To DRAM0
DDR0_DQSN2	DIO	-	DRAM0 data strobe 2 complementary	VDDQ	NC
DDR0_DQSN3	DIO	-	DRAM0 data strobe 3 complementary	VDDQ	NC

Amlogic Proprietary and Confidential
Copyright © Amlogic. All rights reserved.

Net Name	Type	Default Pull Up/Dn	Description	Power Domain	If Unused
DDR0_ DQSP0	DIO	-	DRAM0 data strobe 0	VDDQ	To DRAM0
DDR0_ DQSP1	DIO	-	DRAM0 data strobe 1	VDDQ	To DRAM0
DDR0_ DQSP2	DIO	-	DRAM0 data strobe 2	VDDQ	NC
DDR0_ DQSP3	DIO	-	DRAM0 data strobe 3	VDDQ	NC
DDR0_ PVREF			DRAM0 reference voltage	VDDQ	To GND by ca-pacitor
DDR0_PZQ	A	-	DRAM0 reference pin for ZQ calibration	VDDQ	To GND by 240ohm
DDR0_RST	DO	-	DRAM0 DDR4/LPDDR4/LPDDR4X RSTn	VDDQ	NC
AVDD_ DDR0PLL	P	-	Analog power supply for DDR0PLL	-	To DDR VDDQ
DDR1					
DDR1_AC_ 0	DO	-	DDR PHY1 address/command/control signal bit 0	VDDQ	NC
DDR1_AC_ 1	DO	-	DDR PHY1 address/command/control signal bit 1	VDDQ	NC
DDR1_AC_ 2	DO	-	DDR PHY1 address/command/control signal bit 2	VDDQ	NC
DDR1_AC_ 3	DO	-	DDR PHY1 address/command/control signal bit 3	VDDQ	NC
DDR1_AC_ 4	DO	-	DDR PHY1 address/command/control signal bit 4	VDDQ	NC
DDR1_AC_ 5	DO	-	DDR PHY1 address/command/control signal bit 5	VDDQ	NC
DDR1_AC_ 6	DO	-	DDR PHY1 address/command/control signal bit 6	VDDQ	NC
DDR1_AC_ 7	DO	-	DDR PHY1 address/command/control signal bit 7	VDDQ	NC
DDR1_AC_ 8	DO	-	DDR PHY1 address/command/control signal bit 8	VDDQ	NC
DDR1_AC_ 9	DO	-	DDR PHY1 address/command/control signal bit 9	VDDQ	NC
DDR1_AC_ 10	DO	-	DDR PHY1 address/command/control signal bit 10	VDDQ	NC
DDR1_AC_ 11	DO	-	DDR PHY1 address/command/control signal bit 11	VDDQ	NC
DDR1_AC_ 12	DO	-	DDR PHY1 address/command/control signal bit 12	VDDQ	NC
DDR1_AC_ 13	DO	-	DDR PHY1 address/command/control signal bit 13	VDDQ	NC
DDR1_AC_ 14	DO	-	DDR PHY1 address/command/control signal bit 14	VDDQ	NC

Amlogic Proprietary and Confidential
Copyright © Amlogic. All rights reserved.

Net Name	Type	Default Pull Up/Dn	Description	Power Domain	If Unused
DDR1_AC_15	DO	-	DDR PHY1 address/command/control signal bit 15	VDDQ	NC
DDR1_AC_20	DO	-	DDR PHY1 address/command/control signal bit 20	VDDQ	NC
DDR1_AC_21	DO	-	DDR PHY1 address/command/control signal bit 21	VDDQ	NC
DDR1_AC_22	DO	-	DDR PHY1 address/command/control signal bit 22	VDDQ	NC
DDR1_AC_23	DO	-	DDR PHY1 address/command/control signal bit 23	VDDQ	NC
DDR1_AC_24	DO	-	DDR PHY1 address/command/control signal bit 24	VDDQ	NC
DDR1_AC_25	DO	-	DDR PHY1 address/command/control signal bit 25	VDDQ	NC
DDR1_AC_26	DO	-	DDR PHY1 address/command/control signal bit 26	VDDQ	NC
DDR1_AC_28	DO	-	DDR PHY1 address/command/control signal bit 28	VDDQ	NC
DDR1_AC_29	DO	-	DDR PHY1 address/command/control signal bit 29	VDDQ	NC
DDR1_AC_30	DO	-	DDR PHY1 address/command/control signal bit 30	VDDQ	NC
DDR1_AC_31	DO	-	DDR PHY1 address/command/control signal bit 31	VDDQ	NC
DDR1_AC_32	DO	-	DDR PHY1 address/command/control signal bit 32	VDDQ	NC
DDR1_AC_33	DO	-	DDR PHY1 address/command/control signal bit 33	VDDQ	NC
DDR1_AC_34	DO	-	DDR PHY1 address/command/control signal bit 34	VDDQ	NC
DDR1_AC_35	DO	-	DDR PHY1 address/command/control signal bit 35	VDDQ	NC
DDR1_AC_36	DO	-	DDR PHY1 address/command/control signal bit 36	VDDQ	NC
DDR1_AC_37	DO	-	DDR PHY1 address/command/control signal bit 37	VDDQ	NC
DDR1_AC_38	DO	-	DDR PHY1 address/command/control signal bit 38	VDDQ	NC
DDR1_DQ0	DIO	-	DRAM1 data bus bit 0	VDDQ	To DRAM1
DDR1_DQ1	DIO	-	DRAM1 data bus bit 1	VDDQ	To DRAM1
DDR1_DQ2	DIO	-	DRAM1 data bus bit 2	VDDQ	To DRAM1
DDR1_DQ3	DIO	-	DRAM1 data bus bit 3	VDDQ	To DRAM1
DDR1_DQ4	DIO	-	DRAM1 data bus bit 4	VDDQ	To DRAM1

Amlogic Proprietary and Confidential
Copyright © Amlogic. All rights reserved.

Net Name	Type	Default Pull Up/Dn	Description	Power Domain	If Unused
DDR1_DQ5	DIO	-	DRAM1 data bus bit 5	VDDQ	To DRAM1
DDR1_DQ6	DIO	-	DRAM1 data bus bit 6	VDDQ	To DRAM1
DDR1_DQ7	DIO	-	DRAM1 data bus bit 7	VDDQ	To DRAM1
DDR1_DQ8	DIO	-	DRAM1 data bus bit 8	VDDQ	To DRAM1
DDR1_DQ9	DIO	-	DRAM1 data bus bit 9	VDDQ	To DRAM1
DDR1_DQ10	DIO	-	DRAM1 data bus bit 10	VDDQ	To DRAM1
DDR1_DQ11	DIO	-	DRAM1 data bus bit 11	VDDQ	To DRAM1
DDR1_DQ12	DIO	-	DRAM1 data bus bit 12	VDDQ	To DRAM1
DDR1_DQ13	DIO	-	DRAM1 data bus bit 13	VDDQ	To DRAM1
DDR1_DQ14	DIO	-	DRAM1 data bus bit 14	VDDQ	To DRAM1
DDR1_DQ15	DIO	-	DRAM1 data bus bit 15	VDDQ	To DRAM1
DDR1_DQ16	DIO	-	DRAM1 data bus bit 16	VDDQ	NC
DDR1_DQ17	DIO	-	DRAM1 data bus bit 17	VDDQ	NC
DDR1_DQ18	DIO	-	DRAM1 data bus bit 18	VDDQ	NC
DDR1_DQ19	DIO	-	DRAM1 data bus bit 19	VDDQ	NC
DDR1_DQ20	DIO	-	DRAM1 data bus bit 20	VDDQ	NC
DDR1_DQ21	DIO	-	DRAM1 data bus bit 21	VDDQ	NC
DDR1_DQ22	DIO	-	DRAM1 data bus bit 22	VDDQ	NC
DDR1_DQ23	DIO	-	DRAM1 data bus bit 23	VDDQ	NC
DDR1_DQ24	DIO	-	DRAM1 data bus bit 24	VDDQ	NC
DDR1_DQ25	DIO	-	DRAM1 data bus bit 25	VDDQ	NC
DDR1_DQ26	DIO	-	DRAM1 data bus bit 26	VDDQ	NC
DDR1_DQ27	DIO	-	DRAM1 data bus bit 27	VDDQ	NC
DDR1_DQ28	DIO	-	DRAM1 data bus bit 28	VDDQ	NC

Amlogic Proprietary and Confidential
Copyright © Amlogic. All rights reserved.

Net Name	Type	Default Pull Up/Dn	Description	Power Domain	If Unused
DDR1_DQ29	DIO	-	DRAM1 data bus bit 29	VDDQ	NC
DDR1_DQ30	DIO	-	DRAM1 data bus bit 30	VDDQ	NC
DDR1_DQ31	DIO	-	DRAM1 data bus bit 31	VDDQ	NC
DDR1_DQM0	DIO	-	DRAM1 data mask 0	VDDQ	To DRAM1
DDR1_DQM1	DIO	-	DRAM1 data mask 1	VDDQ	To DRAM1
DDR1_DQM2	DIO	-	DRAM1 data mask 2	VDDQ	NC
DDR1_DQM3	DIO	-	DRAM1 data mask 3	VDDQ	NC
DDR1_DQSN0	DIO	-	DRAM1 data strobe 0 complementary	VDDQ	To DRAM1
DDR1_DQSN1	DIO	-	DRAM1 data strobe 1 complementary	VDDQ	To DRAM1
DDR1_DQSN2	DIO	-	DRAM1 data strobe 2 complementary	VDDQ	NC
DDR1_DQSN3	DIO	-	DRAM1 data strobe 3 complementary	VDDQ	NC
DDR1_DQSP0	DIO	-	DRAM1 data strobe 0	VDDQ	To DRAM1
DDR1_DQSP1	DIO	-	DRAM1 data strobe 1	VDDQ	To DRAM1
DDR1_DQSP2	DIO	-	DRAM1 data strobe 2	VDDQ	NC
DDR1_DQSP3	DIO	-	DRAM1 data strobe 3	VDDQ	NC
DDR1_PVREF	0	0	DRAM1 reference voltage	VDDQ	To GND by capacitor
DDR1_PZQ	A	-	DRAM1 reference pin for ZQ calibration	VDDQ	To GND by 240ohm
DDR1_RST	DO	-	DRAM1 DDR4/LPDDR4/LPDDR4X RSTn	VDDQ	NC
AVDD_DDR1PLL	P	-	Analog power supply for DDR1PLL	-	To DDR VDDQ
Ethernet					
ENET_ATP	AIO	-	Ethernet PHY analog test pin	AVDD18_ENET	NC
ENET_EXTRES	A	-	Ethernet PHY external resistor connection	AVDD18_ENET	NC
ENET_RXN	AIO	-	Ethernet PHY receive date negative input	AVDD18_ENET	NC
ENET_RXP	AIO	-	Ethernet PHY receive data positive input	AVDD18_ENET	NC

Amlogic Proprietary and Confidential
Copyright © Amlogic. All rights reserved.

Net Name	Type	Default Pull Up/Dn	Description	Power Domain	If Unused
ENET_TXN	AIO	-	Ethernet PHY transmit data negative output	AVDD18_ ENET	NC
ENET_TXP	AIO	-	Ethernet PHY transmit data positive output	AVDD18_ ENET	NC
AVDD18_ ENET	AP	-	Analog 1.8V power supply for Ethernet module	-	To 1.8V
GPIOB- refer to Table 4-6 for functional multiplex information.					
GPIOB_0	DIO	Up	General purpose input/output bank B signal 0	VDDIO_B	NC
GPIOB_1	DIO	Up	General purpose input/output bank B signal 1	VDDIO_B	NC
GPIOB_2	DIO	Up	General purpose input/output bank B signal 2	VDDIO_B	NC
GPIOB_3	DIO	Up	General purpose input/output bank B signal 3	VDDIO_B	NC
GPIOB_4	DIO	Up	General purpose input/output bank B signal 4	VDDIO_B	NC
GPIOB_5	DIO	Up	General purpose input/output bank B signal 5	VDDIO_B	NC
GPIOB_6	DIO	Up	General purpose input/output bank B signal 6	VDDIO_B	NC
GPIOB_7	DIO	Up	General purpose input/output bank B signal 7	VDDIO_B	NC
GPIOB_8	DIO	Up	General purpose input/output bank B signal 8	VDDIO_B	NC
GPIOB_9	DIO	Down	General purpose input/output bank B signal 9	VDDIO_B	NC
GPIOB_10	DIO	Up	General purpose input/output bank B signal 10	VDDIO_B	NC
GPIOB_11	DIO	Down	General purpose input/output bank B signal 11	VDDIO_B	NC
GPIOB_12	DIO	Up	General purpose input/output bank B signal 12	VDDIO_B	NC
VDDIO_B	P	-	Power supply for GPIO bank B	-	To 1.8V or 3.3V
GPIOC- refer to Table 4-6 for functional multiplex information.					
GPIOC_0	DIO	Up	General purpose input/output bank C signal 0	VDDIO_C	NC
GPIOC_1	DIO	Up	General purpose input/output bank C signal 1	VDDIO_C	NC
GPIOC_2	DIO	Up	General purpose input/output bank C signal 2	VDDIO_C	NC
GPIOC_3	DIO	Up	General purpose input/output bank C signal 3	VDDIO_C	NC
GPIOC_4	DIO	Up	General purpose input/output bank C signal 4	VDDIO_C	NC
GPIOC_5	DIO	Up	General purpose input/output bank C signal 5	VDDIO_C	NC
GPIOC_6	DIO	Up	General purpose input/output bank C signal 6	VDDIO_C	NC
VDDIO_C	P	-	Power supply for GPIO bank C	-	To 1.8V or 3.3V
GPIOX- refer to Table 4-11 for functional multiplex information.					
GPIOX_0	DIO	Up	General purpose input/output bank X signal 0	VDDIO_X	NC
GPIOX_1	DIO	Up	General purpose input/output bank X signal 1	VDDIO_X	NC
GPIOX_2	DIO	Up	General purpose input/output bank X signal 2	VDDIO_X	NC
GPIOX_3	DIO	Up	General purpose input/output bank X signal 3	VDDIO_X	NC

Amlogic Proprietary and Confidential
Copyright © Amlogic. All rights reserved.

Net Name	Type	Default Pull Up/Dn	Description	Power Domain	If Unused
GPIOX_4	DIO	Up	General purpose input/output bank X signal 4	VDDIO_X	NC
GPIOX_5	DIO	Up	General purpose input/output bank X signal 5	VDDIO_X	NC
GPIOX_6	DIO	Down	General purpose input/output bank X signal 6	VDDIO_X	NC
GPIOX_7	DIO	Up	General purpose input/output bank X signal 7	VDDIO_X	NC
GPIOX_8	DIO	Up	General purpose input/output bank X signal 8	VDDIO_X	NC
GPIOX_9	DIO	Up	General purpose input/output bank X signal 9	VDDIO_X	NC
GPIOX_10	DIO	Up	General purpose input/output bank X signal 10	VDDIO_X	NC
GPIOX_11	DIO	Up	General purpose input/output bank X signal 11	VDDIO_X	NC
GPIOX_12	DIO	Up	General purpose input/output bank X signal 12	VDDIO_X	NC
GPIOX_13	DIO	Up	General purpose input/output bank X signal 13	VDDIO_X	NC
GPIOX_14	DIO	Up	General purpose input/output bank X signal 14	VDDIO_X	NC
GPIOX_15	DIO	Up	General purpose input/output bank X signal 15	VDDIO_X	NC
GPIOX_16	DIO	Up	General purpose input/output bank X signal 16	VDDIO_X	NC
GPIOX_17	DIO	Down	General purpose input/output bank X signal 17	VDDIO_X	NC
GPIOX_18	DIO	Up	General purpose input/output bank X signal 18	VDDIO_X	NC
GPIOX_19	DIO	HiZ	General purpose input/output bank X signal 19	VDDIO_X	NC
VDDIO_X	P	-	Power supply for GPIO bank X	-	To 1.8V or 3.3V
GPIOW- refer to Table 4-2 for functional multiplex information.					
GPIOW_0	OD_5V	HiZ	General purpose input/output bank W signal 0	-	NC
GPIOW_1	OD_5V (Input only)	HiZ	General purpose input bank W signal 1	-	NC
GPIOW_2	OD_5V	HiZ	General purpose input/output bank W signal 2	-	NC
GPIOW_3	OD_5V	HiZ	General purpose input/output bank W signal 3	-	NC
GPIOW_4	OD_5V	HiZ	General purpose input/output bank W signal 4	-	NC
GPIOW_5	OD_5V (Input only)	HiZ	General purpose input bank W signal 5	-	NC
GPIOW_6	OD_5V	HiZ	General purpose input/output bank W signal 6	-	NC
GPIOW_7	OD_5V	HiZ	General purpose input/output bank W signal 7	-	NC
GPIOW_8	OD_5V	HiZ	General purpose input/output bank W signal 8	-	NC
GPIOW_9	OD_5V (Input only)	HiZ	General purpose input bank W signal 9	-	NC
GPIOW_10	OD_5V	HiZ	General purpose input/output bank W signal 10	-	NC
GPIOW_11	OD_5V	HiZ	General purpose input/output bank W signal 11	-	NC
GPIOW_12	OD_5V	HiZ	General purpose input/output bank W signal 12	-	NC

Amlogic Proprietary and Confidential
Copyright © Amlogic. All rights reserved.

Net Name	Type	Default Pull Up/Dn	Description	Power Domain	If Unused
GPIOW_13	OD_5V	HiZ	General purpose input/output bank W signal 13	-	NC
GPIOW_14	OD_5V	HiZ	General purpose input/output bank W signal 14	-	NC
GPIOW_15	OD_5V	HiZ	General purpose input/output bank W signal 15	-	NC
GPIOW_16	OD_5V	HiZ	General purpose input/output bank W signal 16	-	NC
GPIOD- refer to Table 4-11 for functional multiplex information.					
GPIOD_0	DIO	Up	General purpose input/output bank D signal 0	VDDIO_D	NC
GPIOD_1	DIO	Up	General purpose input/output bank D signal 1	VDDIO_D	NC
GPIOD_2	DIO	Up	General purpose input/output bank D signal 2	VDDIO_D	NC
GPIOD_3	DIO	Up	General purpose input/output bank D signal 3	VDDIO_D	NC
GPIOD_4	DIO	Down	General purpose input/output bank D signal 4	VDDIO_D	NC
GPIOD_5	DIO	Up	General purpose input/output bank D signal 5	VDDIO_D	NC
GPIOD_6	DIO	Down	General purpose input/output bank D signal 6	VDDIO_D	NC
GPIOD_7	DIO	Down	General purpose input/output bank D signal 7	VDDIO_D	NC
GPIOD_8	DIO	Down	General purpose input/output bank D signal 8	VDDIO_D	NC
GPIOD_9	DIO	Down	General purpose input/output bank D signal 9	VDDIO_D	NC
GPIOD_10	DIO	Up	General purpose input/output bank D signal 10	VDDIO_D	NC
GPIOD_11	DIO	Down	General purpose input/output bank D signal 11	VDDIO_D	NC
GPIOD_12	DIO	HiZ	General purpose input/output bank D signal 12	VDDIO_D	NC
RESET_N	DIO	HiZ	System reset input		To RESET_N
TEST_N	DIO	Up	SOC test pin should be pulled up during normal power-on.		NC
VDDIO_D	P	-	Power supply for GPIO bank D	-	To 1.8V or 3.3V
GPIOE- refer to Table 4-11 for functional multiplex information.					
GPIOE_0	DIO	HiZ	General purpose input/output bank E signal 0	VDDIO_E	NC
GPIOE_1	DIO	HiZ	General purpose input/output bank E signal 1	VDDIO_E	NC
GPIOE_2	DIO	Down	General purpose input/output bank E signal 2	VDDIO_E	NC
GPIOE_3	DIO	HiZ	General purpose input/output bank E signal 3	VDDIO_E	NC
GPIOE_4	DIO	HiZ	General purpose input/output bank E signal 4	VDDIO_E	NC
GPIOE_5	DIO	HiZ	General purpose input/output bank E signal 5	VDDIO_E	NC
GPIOE_6	DIO	HiZ	General purpose input/output bank E signal 6	VDDIO_E	NC
VDDIO_E	P	-	Power supply for GPIO bank E	-	To 1.8V or 3.3V
GPIOZ- refer to Table 4-7 for functional multiplex information.					
GPIOZ_0	DIO	Up	General purpose input/output bank Z signal 0	VDDIO_Z	NC
GPIOZ_1	DIO	Up	General purpose input/output bank Z signal 1	VDDIO_Z	NC

Amlogic Proprietary and Confidential
Copyright © Amlogic. All rights reserved.

Net Name	Type	Default Pull Up/Dn	Description	Power Domain	If Unused
GPIOZ_2	DIO	Up	General purpose input/output bank Z signal 2	VDDIO_Z	NC
GPIOZ_3	DIO	Up	General purpose input/output bank Z signal 3	VDDIO_Z	NC
GPIOZ_4	DIO	Up	General purpose input/output bank Z signal 4	VDDIO_Z	NC
GPIOZ_5	DIO	Up	General purpose input/output bank Z signal 5	VDDIO_Z	NC
GPIOZ_6	DIO	Up	General purpose input/output bank Z signal 6	VDDIO_Z	NC
GPIOZ_7	DIO	Up	General purpose input/output bank Z signal 7	VDDIO_Z	NC
GPIOZ_8	DIO	Up	General purpose input/output bank Z signal 8	VDDIO_Z	NC
GPIOZ_9	DIO	Down	General purpose input/output bank Z signal 9	VDDIO_Z	NC
GPIOZ_10	DIO	Down	General purpose input/output bank Z signal 10	VDDIO_Z	NC
GPIOZ_11	DIO	Down	General purpose input/output bank Z signal 11	VDDIO_Z	NC
GPIOZ_12	DIO	Down	General purpose input/output bank Z signal 12	VDDIO_Z	NC
GPIOZ_13	DIO	Down	General purpose input/output bank Z signal 13	VDDIO_Z	NC
VDDIO_Z	P	-	Power supply for GPIO bank Z	-	To 1.8V or 3.3V
GPIOT- refer to Table 4-11 for functional multiplex information.					
GPIOT_0	DIO	Down	General purpose input/output bank T signal 0	VDDIO_T	NC
GPIOT_1	DIO	Down	General purpose input/output bank T signal 1	VDDIO_T	NC
GPIOT_2	DIO	Down	General purpose input/output bank T signal 2	VDDIO_T	NC
GPIOT_3	DIO	Down	General purpose input/output bank T signal 3	VDDIO_T	NC
GPIOT_4	DIO	Down	General purpose input/output bank T signal 4	VDDIO_T	NC
GPIOT_5	DIO	Down	General purpose input/output bank T signal 5	VDDIO_T	NC
GPIOT_6	DIO	Down	General purpose input/output bank T signal 6	VDDIO_T	NC
GPIOT_7	DIO	Down	General purpose input/output bank T signal 7	VDDIO_T	NC
GPIOT_8	DIO	Down	General purpose input/output bank T signal 8	VDDIO_T	NC
GPIOT_9	DIO	Down	General purpose input/output bank T signal 9	VDDIO_T	NC
GPIOT_10	DIO	Down	General purpose input/output bank T signal 10	VDDIO_T	NC
GPIOT_11	DIO	Down	General purpose input/output bank T signal 11	VDDIO_T	NC
GPIOT_12	DIO	Down	General purpose input/output bank T signal 12	VDDIO_T	NC
GPIOT_13	DIO	Down	General purpose input/output bank T signal 13	VDDIO_T	NC
GPIOT_14	DIO	Down	General purpose input/output bank T signal 14	VDDIO_T	NC
GPIOT_15	DIO	Down	General purpose input/output bank T signal 15	VDDIO_T	NC
GPIOT_16	DIO	Down	General purpose input/output bank T signal 16	VDDIO_T	NC
GPIOT_17	DIO	Down	General purpose input/output bank T signal 17	VDDIO_T	NC
GPIOT_18	DIO	Down	General purpose input/output bank T signal 18	VDDIO_T	NC
GPIOT_19	DIO	Down	General purpose input/output bank T signal 19	VDDIO_T	NC

Amlogic Proprietary and Confidential
Copyright © Amlogic. All rights reserved.

Net Name	Type	Default Pull Up/Dn	Description	Power Domain	If Unused
GPIOT_20	DIO	Down	General purpose input/output bank T signal 20	VDDIO_T	NC
GPIOT_21	DIO	Down	General purpose input/output bank T signal 21	VDDIO_T	NC
GPIOT_22	DIO	Down	General purpose input/output bank T signal 22	VDDIO_T	NC
GPIOT_23	DIO	Down	General purpose input/output bank T signal 23	VDDIO_T	NC
VDDIO_T	P	-	Power supply for GPIO bank T	-	To 1.8V or 3.3V
GPIOM- refer to Table 4-11 for functional multiplex information.					
GPIOM_0	DIO	Down	General purpose input/output bank M signal 0	VDDIO_M	NC
GPIOM_1	DIO	Down	General purpose input/output bank M signal 1	VDDIO_M	NC
GPIOM_2	DIO	Down	General purpose input/output bank M signal 2	VDDIO_M	NC
GPIOM_3	DIO	Down	General purpose input/output bank M signal 3	VDDIO_M	NC
GPIOM_4	DIO	Down	General purpose input/output bank M signal 4	VDDIO_M	NC
GPIOM_5	DIO	Down	General purpose input/output bank M signal 5	VDDIO_M	NC
GPIOM_6	DIO	Up	General purpose input/output bank M signal 6	VDDIO_M	NC
GPIOM_7	DIO	Up	General purpose input/output bank M signal 7	VDDIO_M	NC
GPIOM_8	DIO	Down	General purpose input/output bank M signal 8	VDDIO_M	NC
GPIOM_9	DIO	Down	General purpose input/output bank M signal 9	VDDIO_M	NC
GPIOM_10	DIO	Down	General purpose input/output bank M signal 10	VDDIO_M	NC
GPIOM_11	DIO	Down	General purpose input/output bank M signal 11	VDDIO_M	NC
GPIOM_12	DIO	Up	General purpose input/output bank M signal 12	VDDIO_M	NC
GPIOM_13	DIO	Up	General purpose input/output bank M signal 13	VDDIO_M	NC
VDDIO_M	P	-	Power supply for GPIO bank M	-	To 1.8V or 3.3V
GPIOY- refer to Table 4-14 for functional multiplex information.					
GPIOY_0	DIO	Down	General purpose input/output bank Y signal 0	VDDIO_Y	NC
GPIOY_1	DIO	Down	General purpose input/output bank Y signal 1	VDDIO_Y	NC
GPIOY_2	DIO	Down	General purpose input/output bank Y signal 2	VDDIO_Y	NC
GPIOY_3	DIO	Up	General purpose input/output bank Y signal 3	VDDIO_Y	NC
GPIOY_4	DIO	Up	General purpose input/output bank Y signal 4	VDDIO_Y	NC
GPIOY_5	DIO	Up	General purpose input/output bank Y signal 5	VDDIO_Y	NC
GPIOY_6	DIO	Up	General purpose input/output bank Y signal 6	VDDIO_Y	NC
GPIOY_7	DIO	Down	General purpose input/output bank Y signal 7	VDDIO_Y	NC
GPIOY_8	DIO	Down	General purpose input/output bank Y signal 8	VDDIO_Y	NC
GPIOY_9	DIO	Down	General purpose input/output bank Y signal 9	VDDIO_Y	NC
GPIOY_10	DIO	Up	General purpose input/output bank Y signal 10	VDDIO_Y	NC
GPIOY_11	DIO	Up	General purpose input/output bank Y signal 11	VDDIO_Y	NC

Amlogic Proprietary and Confidential
Copyright © Amlogic. All rights reserved.

Net Name	Type	Default Pull Up/Dn	Description	Power Domain	If Unused
GPIOY_12	DIO	Up	General purpose input/output bank Y signal 12	VDDIO_Y	NC
GPIOY_13	DIO	Up	General purpose input/output bank Y signal 13	VDDIO_Y	NC
GPIOY_14	DIO	Down	General purpose input/output bank Y signal 14	VDDIO_Y	NC
GPIOY_15	DIO	Up	General purpose input/output bank Y signal 15	VDDIO_Y	NC
GPIOY_16	DIO	Down	General purpose input/output bank Y signal 16	VDDIO_Y	NC
GPIOY_17	DIO	Up	General purpose input/output bank Y signal 17	VDDIO_Y	NC
GPIOY_18	DIO	Up	General purpose input/output bank Y signal 18	VDDIO_Y	NC
VDDIO_Y	P	-	Power supply for GPIO bank Y	-	To 1.8V or 3.3V
GPIOH- refer to Table 4-14 for functional multiplex information.					
GPIOH_0	DIO	Up	General purpose input/output bank H signal 0	VDDIO_H	NC
GPIOH_1	DIO	HiZ	General purpose input/output bank H signal 1	VDDIO_H	NC
GPIOH_2	DIO	Down	General purpose input/output bank H signal 2	VDDIO_H	NC
GPIOH_3	DIO	Up	General purpose input/output bank H signal 3	VDDIO_H	NC
GPIOH_4	DIO	Down	General purpose input/output bank H signal 4	VDDIO_H	NC
GPIOH_5	DIO	Down	General purpose input/output bank H signal 5	VDDIO_H	NC
GPIOH_6	DIO	HiZ	General purpose input/output bank H signal 6	VDDIO_H	NC
GPIOH_7	DIO	HiZ	General purpose input/output bank H signal 7	VDDIO_H	NC
VDDIO_H	P	-	Power supply for GPIO bank H	-	To 1.8V or 3.3V
HDMI RX					
HDMIRX_A_CLKN	AI	-	HDMIRX Port A TMDS clock negative input	AVDD33_HDMIRX	NC
HDMIRX_A_CLKP	AI	-	HDMIRX Port A TMDS clock positive input	AVDD33_HDMIRX	NC
HDMIRX_A_D0N	AI	-	HDMIRX Port A TMDS data0 negative input	AVDD33_HDMIRX	NC
HDMIRX_A_D0P	AI	-	HDMIRX Port A TMDS data0 positive input	AVDD33_HDMIRX	NC
HDMIRX_A_D1N	AI	-	HDMIRX Port A TMDS data1 negative input	AVDD33_HDMIRX	NC
HDMIRX_A_D1P	AI	-	HDMIRX Port A TMDS data1 positive input	AVDD33_HDMIRX	NC
HDMIRX_A_D2N	AI	-	HDMIRX Port A TMDS data2 negative input	AVDD33_HDMIRX	NC
HDMIRX_A_D2P	AI	-	HDMIRX Port A TMDS data2 positive input	AVDD33_HDMIRX	NC
HDMIRX_ARCTXN	AO	-	Audio Return Channel output	AVDD18_HDMIRX_EARCTX	NC
HDMIRX_ARCTXP	AO	-	Audio Return Channel output	AVDD18_HDMIRX_EARCTX	NC

Amlogic Proprietary and Confidential
Copyright © Amlogic. All rights reserved.

Net Name	Type	Default Pull Up/Dn	Description	Power Domain	If Unused
HDMIRX_B_CLKN	AI	-	HDMIRX Port B TMDS clock negative input	AVDD33_HDMIRX	NC
HDMIRX_B_CLKP	AI	-	HDMIRX Port B TMDS clock positive input	AVDD33_HDMIRX	NC
HDMIRX_B_D0N	AI	-	HDMIRX Port B TMDS data0 negative input	AVDD33_HDMIRX	NC
HDMIRX_B_D0P	AI	-	HDMIRX Port B TMDS data0 positive input	AVDD33_HDMIRX	NC
HDMIRX_B_D1N	AI	-	HDMIRX Port B TMDS data1 negative input	AVDD33_HDMIRX	NC
HDMIRX_B_D1P	AI	-	HDMIRX Port B TMDS data1 positive input	AVDD33_HDMIRX	NC
HDMIRX_B_D2N	AI	-	HDMIRX Port B TMDS data2 negative input	AVDD33_HDMIRX	NC
HDMIRX_B_D2P	AI	-	HDMIRX Port B TMDS data2 positive input	AVDD33_HDMIRX	NC
HDMIRX_C_CLKN	AI	-	HDMIRX Port C TMDS clock negative input	AVDD33_HDMIRX	NC
HDMIRX_C_CLKP	AI	-	HDMIRX Port C TMDS clock positive input	AVDD33_HDMIRX	NC
HDMIRX_C_D0N	AI	-	HDMIRX Port C TMDS data0 negative input	AVDD33_HDMIRX	NC
HDMIRX_C_D0P	AI	-	HDMIRX Port C TMDS data0 positive input	AVDD33_HDMIRX	NC
HDMIRX_C_D1N	AI	-	HDMIRX Port C TMDS data1 negative input	AVDD33_HDMIRX	NC
HDMIRX_C_D1P	AI	-	HDMIRX Port C TMDS data1 positive input	AVDD33_HDMIRX	NC
HDMIRX_C_D2N	AI	-	HDMIRX Port C TMDS data2 negative input	AVDD33_HDMIRX	NC
HDMIRX_C_D2P	AI	-	HDMIRX Port C TMDS data2 positive input	AVDD33_HDMIRX	NC
AVDD18_HDMIRX_EARCTX	AP	-	Analog Power supply 1.8V for HDMIRX and eARCTX	-	To 1.8V
AVDD08_HDMIRX	AP	-	Analog Power supply 0.8V for HDMI RX	-	To 0.8V
AVDD33_HDMIRX	AP	-	Power supply for HDMI RX analog 3.3V	-	To 3.3V
HDMI TX					
HDMITX_ARCRXN	AO	-	Audio Return Channel iutput	AVDD18_HDMITX_EARCRX	NC
HDMITX_ARCRXP	AO	-	Audio Return Channel iutput	AVDD18_HDMITX_EARCRX	NC
HDMITX_CLKN	AO	-	HDMI TMDS clock positive output	3.3V	NC

Amlogic Proprietary and Confidential
Copyright © Amlogic. All rights reserved.

Net Name	Type	Default Pull Up/Dn	Description	Power Domain	If Unused
HDMITX_ CLKP	AO	-	HDMI TMDS clock negative output	3.3V	NC
HDMITX_ D0N	AO	-	HDMI TMDS data0 positive output	3.3V	NC
HDMITX_ D0P	AO	-	HDMI TMDS data0 negative output	3.3V	NC
HDMITX_ D1N	AO	-	HDMI TMDS data1 positive output	3.3V	NC
HDMITX_ D1P	AO	-	HDMI TMDS data1 negative output	3.3V	NC
HDMITX_ D2N	AO	-	HDMI TMDS data2 positive output	3.3V	NC
HDMITX_ D2P	AO	-	HDMI TMDS data2 negative output	3.3V	NC
HDMITX_ REXT	A	-	HDMI output strength setting resistor	AVDD18_ HDMITX_ EARCRX	NC
AVDD18_ HDMITX_ EARCRX	AP	-	Analog Power supply 1.8V for HDMITX and eARCRX	-	To 1.8V
AVDD08_ HDMITX	AP	-	Analog Power supply 0.8V for HDMI TX	-	To 0.8V
AVDD33_ HDMITX	AP	-	Pin for decap, Only decap is needed	-	NC
AVSS_HPLL	AP	-	Ground of HDMI PLL	-	To GND
PCIe and USB					
USB_A_ OTG_DM	AIO	-	USB 2.0 Port A OTG negative data signal	AVDD33_ USB	NC
USB_A_ OTG_DP	AIO	-	USB 2.0 Port A OTG positive data signal	AVDD33_ USB	NC
USB_A_ OTG_ID	AI	-	USB 2.0 Port A ID detect signal, internal pull up to 1.8V	AVDD18_ USB_PCIE	NC
USB_A_ OTG_VBUS	AI	-	USB 2.0 Port A host cable power detection (1.8V input tolerance)	AVDD18_ USB_PCIE	NC
USB_B_ OTG_DM	AIO	-	USB 2.0 Port B OTG negative data signal	AVDD33_ USB	NC
USB_B_ OTG_DP	AIO	-	USB 2.0 Port B OTG positive data signal	AVDD33_ USB	NC
USB_B_ OTG_ID	AI	-	USB 2.0 Port B ID detect signal, internal pull up to 1.8V	AVDD18_ USB_PCIE	NC
USB_B_ OTG_VBUS	AI	-	USB 2.0 Port B host cable power detection (1.8V input tolerance)	AVDD18_ USB_PCIE	NC
USB20_ TXRTUNE	AIO	-	USB 2.0 PortA and Port B host output strength setting resistor	AVDD33_ USB	NC
USB30_ PCIE_REXT	AO	-	PCIe and USB3.0 port output strength setting resistor	AVDD18_ USB_PCIE	NC

Amlogic Proprietary and Confidential
Copyright © Amlogic. All rights reserved.

Net Name	Type	Default Pull Up/Dn	Description	Power Domain	If Unused
USB30_ RXN	AI	-	USB3.0 port B input negative signal	AVDD18_ USB_PCIE	NC
USB30_ RXP	AI	-	USB3.0 port B input positive signal	AVDD18_ USB_PCIE	NC
USB30_TXN	AO	-	USB3.0 port B output negative signal	AVDD18_ USB_PCIE	NC
USB30_TXP	AO	-	USB3.0 port B output positive signal	AVDD18_ USB_PCIE	NC
PCIE_CLK_ N	AO	-	PCIe reference clock negative signal	AVDD18_ USB_PCIE	NC
PCIE_CLK_ P	AO	-	PCIe reference clock positive signal	AVDD18_ USB_PCIE	NC
PCIE_RXN	AI	-	PCIe input negative signal	AVDD18_ USB_PCIE	NC
PCIE_RXP	AI	-	PCIe input positive signal	AVDD18_ USB_PCIE	NC
PCIE_TXN	AO	-	PCIe output negative signal	AVDD18_ USB_PCIE	NC
PCIE_TXP	AO	-	PCIe output positive signal	AVDD18_ USB_PCIE	NC
HCSL_ REXT	AIO	-	PCIe reference clk output strength setting resistor	AVDD18_ USB_PCIE	NC
AVDD0V8_ USB_PCIE	AP	-	Analog 0.8V power supply for USB and PCIe	-	To VDD_ EE
AVDD18_ USB_PCIE	AP	-	Analog 1.8V power supply for USB and PCIe	-	To 1.8V
AVDD33_ USB	P	-	3.3V Power supply for USB	-	To 3.3V
POR					
POR_OUT	AO	Down	Power on reset output	AVDD33_ POR	NC
AVDD33_ POR	AP	-	Power supply for POR	-	NC
SARADC					
SARADC_ CH0	AI	-	ADC channel 0 input	AVDD18_ SARADC	NC
SARADC_ CH1	AI	-	ADC channel 1 input	AVDD18_ SARADC	NC
SARADC_ CH2	AI	-	ADC channel 2 input	AVDD18_ SARADC	NC
SARADC_ CH3	AI	-	ADC channel 3 input	AVDD18_ SARADC	NC
SARADC_ CH6	AI	-	ADC channel 6 input	AVDD18_ SARADC	NC
AVDD18_ SARADC	P	-	Analog power supply for SARADC	-	To 1.8V

Amlogic Proprietary and Confidential
Copyright © Amlogic. All rights reserved.

Net Name	Type	Default Pull Up/Dn	Description	Power Domain	If Unused
System Clock & PLL					
SYS_OSCIN	AI	-	24MHz crystal oscillator input	VDD18_AO	To XTAL
SYS_ OSCOUT	AO	-	24MHz crystal oscillator output	VDD18_AO	To XTAL
AVDD18_ PLL	AP	-	Analog power of System PLL	-	To 1.8V
AVSS_PLL	AP	-	Ground of System PLL	-	To GND
MCLK					
CM_MCLK1	AO	-	MCLK 1 output for camera	AVDD18_ MCLK	NC
CM_MCLK2	AO	-	MCLK 2 output for camera	AVDD18_ MCLK	NC
AVDD18_ MCLK	AP	-	Power supply 1.8V for MCLK	-	To 1.8V
Digital Power					
VDD_DDR	P	-	Core Power supply for DDR PHY	-	To VDD_ EE
VDD_EE	P	-	Power supply for core logic	-	To VDD_ EE
VDD_GPU	P	-	Power supply for GPU	-	To VDD_ GPU
VDD_NPU	P	-	Power supply for NNA	-	To VDD_ NPU
VDD18_AO	P	-	1.8V Power supply for Always On Domain	-	To VD-D18_ AO
VDDCPU_A	P	-	Power supply for CPU (Cortex A73)	-	To VDDCP-U_A
VDDCPU_B	P	-	Power supply for CPU (Cortex A53)	-	To VDDCP-U_B
VDDQ	P	-	DDR IO Power supply for DDR PHY	-	To VDDQ
VDDQLP	P	-	DDR IO Power supply for DDR PHY	-	To VDDQ
DVSS	P	-	Digital power ground	-	To GND
Display interface					
VX1_A_0N	AO	-	V-by-one A data0 or LVDS A data0 or MIPI DSI A data0 or eDP A Aux negative output	AVDD18_ DP	NC
VX1_A_0P	AO	-	V-by-one A data0 or LVDS A data0 or MIPI DSI A data0 or eDP A Aux positive output	AVDD18_ DP	NC
VX1_A_1N	AO	-	V-by-one A data1 or LVDS A data1 or MIPI DSI A data1 or eDP A data0 negative output	AVDD18_ DP	NC
VX1_A_1P	AO	-	V-by-one A data1 or LVDS A data1 or MIPI DSI A data1 or eDP A data0 positive output	AVDD18_ DP	NC

Amlogic Proprietary and Confidential
Copyright © Amlogic. All rights reserved.

Net Name	Type	Default Pull Up/Dn	Description	Power Domain	If Unused
VX1_A_2N	AO	-	V-by-one A data2 or LVDS A data2 or MIPI DSI A clk or eDP A data1 negative output	AVDD18_DP	NC
VX1_A_2P	AO	-	V-by-one A data2 or LVDS A data2 or MIPI DSI A clk or eDP A data1 positive output	AVDD18_DP	NC
VX1_A_3N	AO	-	V-by-one A data3 or LVDS A clk or MIPI DSI A data2 or eDP A data2 negative output	AVDD18_DP	NC
VX1_A_3P	AO	-	V-by-one A data3 or LVDS A clk or MIPI DSI A data2 or eDP A data2 positive output	AVDD18_DP	NC
VX1_A_4N	AO	-	V-by-one A data4 or LVDS A data3 or MIPI DSI A data3 or eDP A data3 negative output	AVDD18_DP	NC
VX1_A_4P	AO	-	V-by-one A data4 or LVDS A data3 or MIPI DSI A data3 or eDP A data3 positive output	AVDD18_DP	NC
VX1_A_5N	AO	-	V-by-one A data5 or LVDS B data0 negative output	AVDD18_DP	NC
VX1_A_5P	AO	-	V-by-one A data5 or LVDS B data0 positive output	AVDD18_DP	NC
VX1_A_6N	AO	-	V-by-one A data6 or LVDS B data1 negative output	AVDD18_DP	NC
VX1_A_6P	AO	-	V-by-one A data6 or LVDS B data1 positive output	AVDD18_DP	NC
VX1_A_7N	AO	-	V-by-one A data7 or LVDS B data2 negative output	AVDD18_DP	NC
VX1_A_7P	AO	-	V-by-one A data7 or LVDS B data2 positive output	AVDD18_DP	NC
VX1_ATP	AO	-	V-by-one B or LVDS or MIPI DSI or eDP test output	AVDD18_DP	NC
VX1_B_0N	AO	-	V-by-one B data0 or LVDS B clk or MIPI DSI B data0 or eDP B Aux negative output	AVDD18_DP	NC
VX1_B_0P	AO	-	V-by-one B data0 or LVDS B clk or MIPI DSI B data0 or eDP B Aux positive output	AVDD18_DP	NC
VX1_B_1N	AO	-	V-by-one B data1 or LVDS B data3 or MIPI DSI B data1 or eDP B data0 negative output	AVDD18_DP	NC
VX1_B_1P	AO	-	V-by-one B data1 or LVDS B data3 or MIPI DSI B data1 or eDP B data0 positive output	AVDD18_DP	NC
VX1_B_2N	AO	-	V-by-one B data2 or LVDS C data0 or MIPI DSI B clk or eDP B data1 negative output	AVDD18_DP	NC
VX1_B_2P	AO	-	V-by-one B data2 or LVDS C data0 or MIPI DSI B clk or eDP B data1 positive output	AVDD18_DP	NC
VX1_B_3N	AO	-	V-by-one B data3 or LVDS C data1 or MIPI DSI B data2 or eDP B data2 negative output	AVDD18_DP	NC
VX1_B_3P	AO	-	V-by-one B data3 or LVDS C data1 or MIPI DSI B data2 or eDP B data2 positive output	AVDD18_DP	NC
VX1_B_4N	AO	-	V-by-one B data4 or LVDS C data2 or MIPI DSI B data3 or eDP B data3 negative output	AVDD18_DP	NC
VX1_B_4P	AO	-	V-by-one B data4 or LVDS C data2 or MIPI DSI B data3 or eDP B data3 positive output	AVDD18_DP	NC

Amlogic Proprietary and Confidential
Copyright © Amlogic. All rights reserved.

Net Name	Type	Default Pull Up/Dn	Description	Power Domain	If Unused
VX1_B_5N	AO	-	V-by-one B data5 or LVDS C clk negative output	AVDD18_ DP	NC
VX1_B_5P	AO	-	V-by-one B data5 or LVDS C clk positive output	AVDD18_ DP	NC
VX1_B_6N	AO	-	V-by-one B data6 or LVDS C data3 negative output	AVDD18_ DP	NC
VX1_B_6P	AO	-	V-by-one B data6 or LVDS C data3 positive output	AVDD18_ DP	NC
VX1_B_7N	AO	-	V-by-one B data7 negative output	AVDD18_ DP	NC
VX1_B_7P	AO	-	V-by-one B data7 positive output	AVDD18_ DP	NC
VX1_LPN	AO	-	V-by-one B or LVDS or MIPI DSI or eDP test output	AVDD18_ DP	NC
VX1_LPP	AO	-	V-by-one B or LVDS or MIPI DSI or eDP test output	AVDD18_ DP	NC
DIF_REXT	AO	-	eDP, MIPI DSI, LVDS and V-by-one reference resistor	AVDD18_ DP	NC
AVDD08_ DP	AP	-	Analog Power supply 0.8V for Display interface	-	To 0.8V
AVDD18_ DP	AP	-	Analog Power supply 1.8V for display interface	-	To 1.8V
AVDD18_ DDR_DP_ PLL	AP	-	Analog Power supply 0.8V for DDR and display interface PLL	-	To 0.8V
AVSS_DP	AP	-	Analog ground for diaplay interface	-	To VSS

Abbreviations:

- DI = Digital input pin
- DO = Digital output pin
- DIO = Digital input/output pin
- OD5V = 5V input tolerant open drain (OD) output pin, need external pull Up
- A = Analog setting or filtering pin
- AI = Analog input pin
- AO = Analog output pin
- AIO = Analog input/output pin
- P = Power pin
- AP = Analog power pin
- NC = No connection
- Up = Pull-Up
- Down = Pull-down
- COMB PIN = Combined Pin
- Z = High-Z

Amlogic Proprietary and Confidential
Copyright © Amlogic. All rights reserved.

4.4 Pin Multiplexing Tables

Multiple usage pins are used to conserve pin consumption for different features. The device can be used in many different applications but each application will not utilize all the onchip features. As a result, some of the features share the same pin. Most of the multiple usage pins can be used as a GPIO pin as well.

Table 4-2 GPIOW_x Multi-Function Pin

Pin Name	Func1	Func2	Func3
GPIOW_0	HDMIRX_A_HPD		
GPIOW_1	HDMIRX_A_5VDET		
GPIOW_2	HDMIRX_A_SDA	UART_AO_A_TX	HDMITX_SDA
GPIOW_3	HDMIRX_A_SCL	UART_AO_A_RX	HDMITX_SCL
GPIOW_4	HDMIRX_C_HPD		
GPIOW_5	HDMIRX_C_5VDET		
GPIOW_6	HDMIRX_C_SDA	UART_AO_A_TX	
GPIOW_7	HDMIRX_C_SCL	UART_AO_A_RX	
GPIOW_8	HDMIRX_B_HPD		
GPIOW_9	HDMIRX_B_5VDET		
GPIOW_10	HDMIRX_B_SDA	UART_AO_A_TX	
GPIOW_11	HDMIRX_B_SCL	UART_AO_A_RX	
GPIOW_12	CEC_A		
GPIOW_13	HDMITX_SDA		
GPIOW_14	HDMITX_SCL		
GPIOW_15	HDMITX_HPD_IN		
GPIOW_16	CEC_B		

Table 4-3 GPIOD_x Multi-Function Pin

Pin Name	Func1	Func2	Func3	Func4
GPIOD_0	UART_AO_A_TX			
GPIOD_1	UART_AO_A_RX			
GPIOD_2	I2CM_AO_A_SCL	I2CS_AO_SCL	UART_AO_B_TX	
GPIOD_3	I2CM_AO_A_SDA	I2CS_AO_SDA	UART_AO_B_RX	
GPIOD_4	IR_OUT	RTC_CLK_IN	UART_AO_B_CTS	
GPIOD_5	IR_IN	PWM_AO_H		
GPIOD_6	JTAG_A_CLK	PWM_AO_C	PWM_AO_C_HIZ	IR_OUT
GPIOD_7	JTAG_A_TMS	PWM_AO_G	PWM_AO_G_HIZ	
GPIOD_8	JTAG_A_TDI	SPDIF_OUT		
GPIOD_9	JTAG_A_TDO	SPDIF_IN		

Amlogic Proprietary and Confidential
Copyright © Amlogic. All rights reserved.

Pin Name	Func1	Func2	Func3	Func4
GPIOD_10	GEN_CLK_OUT	PWM_AO_H	UART_AO_B_RTS	
GPIOD_11	PWM_AO_G			
GPIOD_12	WD_RSTO			

Table 4-4 GPIOE_x Multi-Function Pin

Pin Name	Func1	Func2	Func3
GPIOE_0	PWM_AO_A	I2CM_AO_A_SCL	
GPIOE_1	PWM_AO_B	I2CM_AO_A_SDA	
GPIOE_2	PWM_AO_C	CLK25M	
GPIOE_3	PWM_AO_D	I2CM_AO_B_SCL	
GPIOE_4	PWM_AO_E	I2CM_AO_B_SDA	CLK12M_24M
GPIOE_5	PWM_AO_F	RTC_CLK_OUT	
GPIOE_6	PWM_AO_G		

Table 4-5 GPIOB_x Multi-Function Pin

Pin Name	Func1	Func2
GPIOB_0	EMMC_D0	
GPIOB_1	EMMC_D1	
GPIOB_2	EMMC_D2	
GPIOB_3	EMMC_D3	SPIF_HOLD
GPIOB_4	EMMC_D4	SPIF_MO
GPIOB_5	EMMC_D5	SPIF_MI
GPIOB_6	EMMC_D6	SPIF_CLK
GPIOB_7	EMMC_D7	SPIF_WP
GPIOB_8	EMMC_CLK	
GPIOB_9		
GPIOB_10	EMMC_CMD	
GPIOB_11	EMMC_DS	
GPIOB_12		SPIF_CS

Table 4-6 GPIOC_x Multi-Function Pin

Pin Name	Func1	Func2	Func3
GPIOC_0	SDCARD_D0	JTAG_B_TDO	SPI_B_MOSI
GPIOC_1	SDCARD_D1	JTAG_B_TDI	SPI_B_MISO
GPIOC_2	SDCARD_D2	UART_AO_A_RX	SPI_B_SCLK

Amlogic Proprietary and Confidential
Copyright © Amlogic. All rights reserved.

Pin Name	Func1	Func2	Func3
GPIOC_3	SDCARD_D3	UART_AO_A_TX	SPI_B_SS0
GPIOC_4	SDCARD_CLK	JTAG_B_CLK	
GPIOC_5	SDCARD_CMD	JTAG_B_TMS	
GPIOC_6	GEN_CLK_OUT		

Table 4-7 GPIOZ_x Multi-Function Pin

Pin Name	Func1	Func2	Func3	Func4
GPIOZ_0	ETH_MDIO	ISO7816_CLK		SPI_E_MOSI
GPIOZ_1	ETH_MDC	ISO7816_DATA		SPI_E_MISO
GPIOZ_2	ETH_RGMII_RX_CLK	TSIN_B_VALID		SPI_E_SCLK
GPIOZ_3	ETH_RX_DV	TSIN_B_SOP		SPI_E_SS0
GPIOZ_4	ETH_RXD0	TSIN_B_DIN0		SPI_F_MOSI
GPIOZ_5	ETH_RXD1	TSIN_B_CLK		SPI_F_MISO
GPIOZ_6	ETH_RXD2_RGMII	TSIN_B_FAIL	TSIN_C_VALID	SPI_F_SCLK
GPIOZ_7	ETH_RXD3_RGMII	TSIN_B_DIN1	TSIN_C_SOP	SPI_F_SS0
GPIOZ_8	ETH_RGMII_TX_CLK	TSIN_B_DIN2	TSIN_C_DIN0	
GPIOZ_9	ETH_TXEN	TSIN_B_DIN3	TSIN_C_CLK	
GPIOZ_10	ETH_TXD0	TSIN_B_DIN4	TSIN_D_VALID	
GPIOZ_11	ETH_TXD1	TSIN_B_DIN5	TSIN_D_SOP	
GPIOZ_12	ETH_TXD2_RGMII	TSIN_B_DIN6	TSIN_D_DIN0	
GPIOZ_13	ETH_TXD3_RGMII	TSIN_B_DIN7	TSIN_D_CLK	

Table 4-8 GPIOH_x Multi-Function Pin

Pin Name	Func1	Func2	Func3
GPIOH_0	MIC_MUTE_KEY		
GPIOH_1	Mic_Mute_LED	PWM_VS	
GPIOH_2	I2CM_D_SCL	UART_F_TX	PCIECK_REQN
GPIOH_3	I2CM_D_SDA	UART_F_RX	
GPIOH_4	I2CM_E_SCL	UART_F_CTS	
GPIOH_5	I2CM_E_SDA	UART_F_RTS	
GPIOH_6	ETH_LINK_LED	I2CM_A_SDA	
GPIOH_7	ETH_ACT_LED	I2CM_A_SCL	

Amlogic Proprietary and Confidential
Copyright © Amlogic. All rights reserved.

Table 4-9 GPIOM_x Multi-Function Pin

Pin Name	Func1	Func2
GPIOM_0	TDM_D12	PDM_DIN1
GPIOM_1	TDM_D13	PDM_DIN2
GPIOM_2	TDM_D14	PDM_DIN3
GPIOM_3	TDM_D15	PDM_DCLK
GPIOM_4	TDM_SCLK3	PDM_DIN0
GPIOM_5	TDM_FS3	PDM_DIN1
GPIOM_6	I2CM_D_SCL	
GPIOM_7	I2CM_D_SDA	
GPIOM_8	SPI_B_MOSI	UART_D_TX
GPIOM_9	SPI_B_MISO	UART_D_RX
GPIOM_10	SPI_B_SCLK	UART_D_CTS
GPIOM_11	SPI_B_SS0	UART_D_RTS
GPIOM_12	SPI_B_SS1	I2CM_C_SCL
GPIOM_13	SPI_B_SS2	I2CM_C_SDA

Table 4-10 GPIOX_x Multi-Function Pin

Pin Name	Func1	Func2
GPIOX_0	SDIO_D0	
GPIOX_1	SDIO_D1	
GPIOX_2	SDIO_D2	
GPIOX_3	SDIO_D3	
GPIOX_4	SDIO_CLK	
GPIOX_5	SDIO_CMD	
GPIOX_6	PWM_B	
GPIOX_7	PWM_C	
GPIOX_8	TDM_D0	
GPIOX_9	TDM_D1	
GPIOX_10	TDM_FS0	
GPIOX_11	TDM_SCLK0	
GPIOX_12	UART_C_TX	
GPIOX_13	UART_C_RX	
GPIOX_14	UART_C_CTS	CLK12M_24M
GPIOX_15	UART_C_RTS	
GPIOX_16	PWM_A	

Amlogic Proprietary and Confidential
Copyright © Amlogic. All rights reserved.

Pin Name	Func1	Func2
GPIOX_17	I2CM_C_SDA	
GPIOX_18	I2CM_C_SCL	
GPIOX_19	PWM_D	

Table 4-11 GPIOT_x Multi-Function Pin

Pin Name	Func1	Func2	Func3
GPIOT_0	MCLK_1		
GPIOT_1	TDM_SCLK1		
GPIOT_2	TDM_FS1		
GPIOT_3	TDM_D2	SPDIF_IN	
GPIOT_4	TDM_D3	SPDIF_OUT	
GPIOT_5	TDM_D4	ISO7816_CLK	
GPIOT_6	TDM_D5	ISO7816_DATA	SPI_D_MOSI
GPIOT_7	TDM_D6	TSIN_A_SOP	SPI_D_MISO
GPIOT_8	TDM_D7	TSIN_A_DIN0	SPI_D_SCLK
GPIOT_9	TDM_D8	TSIN_A_CLK	SPI_D_SS0
GPIOT_10	TDM_D9	TSIN_A_VALID	
GPIOT_11	TDM_D10		
GPIOT_12	TDM_D11		
GPIOT_13	MCLK_2		
GPIOT_14	TDM_SCLK2		
GPIOT_15	TDM_FS2		
GPIOT_16	I2CM_B_SCL		
GPIOT_17	I2CM_B_SDA		
GPIOT_18	SPI_A_MOSI		
GPIOT_19	SPI_A_MISO		
GPIOT_20	SPI_A_SCLK	I2CM_A_SCL	
GPIOT_21	SPI_A_SS0	I2CM_A_SDA	
GPIOT_22	SPI_A_SS1	I2CM_C_SCL	
GPIOT_23	SPI_A_SS2	I2CM_C_SDA	

Table 4-12 GPIOY_x Multi-Function Pin

Pin Name	Func1	Func2	Func3	Func4
GPIOY_0	SPI_C_MOSI			
GPIOY_1	SPI_C_MISO		PWM_E	

Amlogic Proprietary and Confidential
Copyright © Amlogic. All rights reserved.

Pin Name	Func1	Func2	Func3	Func4
GPIOY_2	SPI_C_SCLK			
GPIOY_3	SPI_C_SS0			
GPIOY_4	SPI_C_SS1	TSIN_C_SOP	HSYNC	
GPIOY_5	SPI_C_SS2	TSIN_C_DIN0	VSYNC	
GPIOY_6	UART_E_TX	TSIN_C_CLK		
GPIOY_7	UART_E_RX	TSIN_C_VALID		
GPIOY_8	UART_E_CTS	TSIN_D_SOP	PWM_F	
GPIOY_9	UART_E_RTS	TSIN_D_DIN0	3D_SYNC_OUT	
GPIOY_10	UART_D_CTS	TSIN_D_CLK	VX1_A_HTPDN	eDP_A_HPD
GPIOY_11	UART_D_RTS	TSIN_D_VALID	VX1_B_HTPDN	eDP_B_HPD
GPIOY_12	UART_D_TX		VX1_A_LOCKN	
GPIOY_13	UART_D_RX		VX1_B_LOCKN	
GPIOY_14			PWM_VS	
GPIOY_15	I2CM_E_SCL			
GPIOY_16	I2CM_E_SDA			
GPIOY_17	I2CM_F_SCL			
GPIOY_18	I2CM_F_SDA	PCIECK_REQN		

Table 4-13 CSI Multi-Function Pin

Pin Name	Mux
CSI_B_D0N	CSI_A_D2N
CSI_B_D0P	CSI_A_D2P
CSI_B_D1N	CSI_A_D3N
CSI_B_D1P	CSI_A_D3P
CSI_D_D0N	CSI_C_D2N
CSI_D_D0P	CSI_C_D2P
CSI_D_D1N	CSI_C_D3N
CSI_D_D1P	CSI_C_D3P

Table 4-14 VX1 Multi-Function Pin

Pin Name	LVDS	EDP	DSI
VX1_A_0N	LVDS_A_0N	EDP_A_AUXN	DSI_A_D0N
VX1_A_0P	LVDS_A_0P	EDP_A_AUXP	DSI_A_D0P
VX1_A_1N	LVDS_A_1N	EDP_A_0N	DSI_A_D1N
VX1_A_1P	LVDS_A_1P	EDP_A_0P	DSI_A_D1P

Amlogic Proprietary and Confidential
Copyright © Amlogic. All rights reserved.

Pin Name	LVDS	EDP	DSI
VX1_A_2N	LVDS_A_2N	EDP_A_1N	DSI_A_CKN
VX1_A_2P	LVDS_A_2P	EDP_A_1P	DSI_A_CKP
VX1_A_3N	LVDS_A_CLKN	EDP_A_2N	DSI_A_D2N
VX1_A_3P	LVDS_A_CLKP	EDP_A_2P	DSI_A_D2P
VX1_A_4N	LVDS_A_3N	EDP_A_3N	DSI_A_D3N
VX1_A_4P	LVDS_A_3P	EDP_A_3P	DSI_A_D3P
VX1_A_5N	LVDS_B_0N		
VX1_A_5P	LVDS_B_0P		
VX1_A_6N	LVDS_B_1N		
VX1_A_6P	LVDS_B_1P		
VX1_A_7N	LVDS_B_2N		
VX1_A_7P	LVDS_B_2P		
VX1_B_0N	LVDS_B_CLKN	EDP_B_AUXN	DSI_B_D0N
VX1_B_0P	LVDS_B_CLKP	EDP_B_AUXP	DSI_B_D0P
VX1_B_1N	LVDS_B_3N	EDP_B_0N	DSI_B_D1N
VX1_B_1P	LVDS_B_3P	EDP_B_0P	DSI_B_D1P
VX1_B_2N	LVDS_C_0N	EDP_B_1N	DSI_B_CKN
VX1_B_2P	LVDS_C_0P	EDP_B_1P	DSI_B_CKP
VX1_B_3N	LVDS_C_1N	EDP_B_2N	DSI_B_D2N
VX1_B_3P	LVDS_C_1P	EDP_B_2P	DSI_B_D2P
VX1_B_4N	LVDS_C_2N	EDP_B_3N	DSI_B_D3N
VX1_B_4P	LVDS_C_2P	EDP_B_3P	DSI_B_D3P
VX1_B_5N	LVDS_C_CLKN		
VX1_B_5P	LVDS_C_CLKP		
VX1_B_6N	LVDS_C_3N		
VX1_B_6P	LVDS_C_3P		
VX1_B_7N			
VX1_B_7P			

Table 4-15 DDR Multi-Function Pin

Pin Name	LPDDR4/LPDDR4X	DDR4
DDR0_AC_0	CKEA0	CKE0
DDR0_AC_1	CKEA1	CKE1
DDR0_AC_2	CSA0	CS_N0
DDR0_AC_3	CSA1	NC

Amlogic Proprietary and Confidential
Copyright © Amlogic. All rights reserved.

Pin Name	LPDDR4/LPDDR4X	DDR4
DDR0_AC_4	CLKA_T	BG0
DDR0_AC_5	CLKA_C	A10
DDR0_AC_6	NC	A8
DDR0_AC_7	NC	A11
DDR0_AC_8	CAA2	WE_N
DDR0_AC_9	CAA3	BG1
DDR0_AC_10	CAA1	A12
DDR0_AC_11	CAA0	RAS_N
DDR0_AC_12	CAA5	A3
DDR0_AC_13	CAA4	CAS_N
DDR0_AC_14	NC	A7
DDR0_AC_15	NC	A13
DDR0_AC_20	CKEB0	CLK1_T
DDR0_AC_21	CKEB1	CLK1_C
DDR0_AC_22	CSB1	NC
DDR0_AC_23	CSB0	NC
DDR0_AC_24	CLKB_T	BA1
DDR0_AC_25	CLKB_C	A4
DDR0_AC_26	NC	BA0
DDR0_AC_28	CAB1	ACT_N
DDR0_AC_29	CAB3	A0
DDR0_AC_30	CAB5	A9
DDR0_AC_31	CAB2	A1
DDR0_AC_32	CAB4	NC
DDR0_AC_33	CAB0	A6
DDR0_AC_34	NC	A2
DDR0_AC_35	NC	A5
DDR0_AC_36	NC	ODT0
DDR0_AC_37	NC	ODT1
DDR0_AC_38	NC	CS_N1
DDR1_AC_0	CKEA0	CKE0
DDR1_AC_1	CKEA1	CKE1
DDR1_AC_2	CSA0	CS_N0
DDR1_AC_3	CSA1	NC
DDR1_AC_4	CLKA_T	BG0

Amlogic Proprietary and Confidential
Copyright © Amlogic. All rights reserved.

Pin Name	LPDDR4/LPDDR4X	DDR4
DDR1_AC_5	CLKA_C	A10
DDR1_AC_6	NC	A8
DDR1_AC_7	NC	A11
DDR1_AC_8	CAA2	WE_N
DDR1_AC_9	CAA3	BG1
DDR1_AC_10	CAA1	A12
DDR1_AC_11	CAA0	RAS_N
DDR1_AC_12	CAA5	A3
DDR1_AC_13	CAA4	CAS_N
DDR1_AC_14	NC	A7
DDR1_AC_15	NC	A13
DDR1_AC_20	CKEB0	CLK1_T
DDR1_AC_21	CKEB1	CLK1_C
DDR1_AC_22	CSB1	NC
DDR1_AC_23	CSB0	NC
DDR1_AC_24	CLKB_T	BA1
DDR1_AC_25	CLKB_C	A4
DDR1_AC_26	NC	BA0
DDR1_AC_28	CAB1	ACT_N
DDR1_AC_29	CAB3	A0
DDR1_AC_30	CAB5	A9
DDR1_AC_31	CAB2	A1
DDR1_AC_32	CAB4	NC
DDR1_AC_33	CAB0	A6
DDR1_AC_34	NC	A2
DDR1_AC_35	NC	A5
DDR1_AC_36	NC	ODT0
DDR1_AC_37	NC	ODT1
DDR1_AC_38	NC	CS_N1

4.5 Signal Description

Amlogic Proprietary and Confidential
Copyright © Amlogic. All rights reserved.

Table 4-16 SD Card Interface Signal Description

Signal Name	Type	Description
SDCARD_D0	DIO	SD Card data bus bit 0 signal
SDCARD_D1	DIO	SD Card data bus bit 1 signal
SDCARD_D2	DIO	SD Card data bus bit 2 signal
SDCARD_D3	DIO	SD Card data bus bit 3 signal
SDCARD_CLK	DO	SD Card clock signal
SDCARD_CMD	DIO	SD Card command signal

Table 4-17 SDIO Interface Signal Description

Signal Name	Type	Description
SDIO_D0	DIO	SDIO data bus bit 0 signal
SDIO_D1	DIO	SDIO data bus bit 1 signal
SDIO_D2	DIO	SDIO data bus bit 2 signal
SDIO_D3	DIO	SDIO data bus bit 3 signal
SDIO_CLK	DO	SDIO clock signal
SDIO_CMD	DIO	SDIO command signal

Table 4-18 Clock Interface Signal Description

Signal Name	Type	Description
CLK12M_24M	DO	12MHz/24MHZ clock output
CLK25M	DO	25MHz clock output

Table 4-19 UART Interface Signal Description

Signal Name	Type	Description
UART_D_TX	DO	UART Port D data output
UART_D_RX	DI	UART Port D data input
UART_D_CTS	DI	UART Port D Clear To Send Signal
UART_D_RTS	DO	UART Port D Ready To Send Signal
UART_E_TX	DO	UART Port E data output
UART_E_RX	DIO	UART Port E data input
UART_E_CTS	DIO	UART Port E Clear To Send Signal
UART_E_RTS	DIO	UART Port E Ready To Send Signal
UART_A_TX	DIO	UART Port A data output
UART_A_RX	DIO	UART Port A data input
UART_A_CTS	DIO	UART Port A Clear To Send Signal
UART_A_RTS	DIO	UART Port A Ready To Send Signal
UART_AO_A_TX	DIO	UART Port A data output in AO domain

Amlogic Proprietary and Confidential
Copyright © Amlogic. All rights reserved.

Signal Name	Type	Description
UART_AO_A_RX	DIO	UART Port A data input in AO domain
UART_AO_B_TX	DIO	UART Port B data output in AO domain
UART_AO_B_RX	DIO	UART Port B data input in AO domain
UART_AO_B_CTS	DIO	UART Port B Clear To Send Signal in AO domain
UART_AO_B_RTS	DIO	UART Port B Ready To Send Signal in AO domain
UART_C_TX	DIO	UART Port C data output
UART_C_RX	DIO	UART Port C data input
UART_C_CTS	DIO	UART Port C Clear To Send Signal
UART_C_RTS	DIO	UART Port C Ready To Send Signal
UART_F_TX	DIO	UART Port F data output
UART_F_RX	DIO	UART Port F data input
UART_F_CTS	DIO	UART Port F Clear To Send Signal
UART_F_RTS	DIO	UART Port F Ready To Send Signal

Table 4-20 ISO7816 Interface Signal Description

Signal Name	Type	Description
ISO7816_DATA	DIO	ISO7816 data signal
ISO7816_CLK	DO	ISO7816 clock signal

Table 4-21 TS In Interface Signal Description

Signal Name	Type	Description
TSIN_A_DIN0	DI	Serial TS input port A data
TSIN_A_CLK	DI	TS input port A clock
TSIN_A_SOP	DI	TS input port A start of stream signal
TSIN_A_VALID	DI	TS input port A date valid signal
TSIN_B_DIN0	DI	Serial/Parallel TS input port B data 0
TSIN_B_DIN1	DI	Parallel TS input port B data 1
TSIN_B_DIN2	DI	Parallel TS input port B data 2
TSIN_B_DIN3	DI	Parallel TS input port B data 3
TSIN_B_DIN4	DI	Parallel TS input port B data 4
TSIN_B_DIN5	DI	Parallel TS input port B data 5
TSIN_B_DIN6	DI	Parallel TS input port B data 6
TSIN_B_DIN7	DI	Parallel TS input port B data 7
TSIN_B_FAIL	DI	TS input port B fail signal
TSIN_B_CLK	DI	TS input port B clock
TSIN_B_SOP	DI	TS input port B start of stream signal

Amlogic Proprietary and Confidential
Copyright © Amlogic. All rights reserved.

Signal Name	Type	Description
TSIN_B_VALID	DI	TS input port B date valid signal
TSIN_C_DIN0	DI	Serial TS input port C data
TSIN_C_CLK	DI	TS input port C clock
TSIN_C_SOP	DI	TS input port C start of stream signal
TSIN_C_VALID	DI	TS input port C date valid signal
TSIN_D_DIN0	DI	Serial TS input port D data
TSIN_D_CLK	DI	TS input port D clock
TSIN_D_SOP	DI	TS input port D start of stream signal
TSIN_D_VALID	DI	TS input port D date valid signal

Table 4-22 PWM Interface Signal Description

Signal Name	Type	Description
PWM_A	DO	PWM channel A output signal
PWM_B	DO	PWM channel B output signal
PWM_C	DO	PWM channel C output signal
PWM_D	DO	PWM channel D output signal
PWM_E	DO	PWM channel E output signal
PWM_F	DO	PWM channel F output signal
PWM_AO_A	DO	PWM A output signal in Always On domain
PWM_AO_B	DO	PWM B output signal in Always On domain
PWM_AO_C / PWMAO_C_HIZ	DO	PWM C output signal in Always On domain, or extended HiZ function of PWM_AO_C
PWM_AO_D	DO	PWM D output signal in Always On domain
PWM_AO_E	DO	PWM E output signal in Always On domain
PWM_AO_F	DO	PWM F output signal in Always On domain
PWM_AO_G / PWM_AO_G_HIZ	DO	PWM G output signal in Always On domain, or extended HiZ function of PWM_AO_G
PWM_AO_H	DO	PWM H output signal in Always On domain
PWM_VS	DO	

Table 4-23 I2C Interface Signal Description

Signal Name	Type	Description
I2CM_E_ SCL	DO	I2C bus group E clock output, master mode
I2CM_E_SDA	DIO	I2C bus group E data input/output, master mode
I2CM_A_SCL	DO	I2C bus group E clock output, master mode
I2CM_A_SDA	DIO	I2C bus group E data input/output, master mode
I2CM_B_SCL	DO	I2C bus group E clock output, master mode

Amlogic Proprietary and Confidential
Copyright © Amlogic. All rights reserved.

Signal Name	Type	Description
I2CM_B_SDA	DIO	I2C bus group E data input/output, master mode
I2CM_C_SCL	DO	I2C bus group E clock output, master mode
I2CM_C_SDA	DIO	I2C bus group E data input/output, master mode
I2CM_D_SCL	DO	I2C bus group E clock output, master mode
I2CM_D_SDA	DIO	I2C bus group E data input/output, master mode
I2CM_AO_A_SCL	DIO	I2C bus group AO data input/output, master mode
I2CM_AO_A_SDA	DIO	I2C bus group AO data input/output, master mode
I2CM_AO_B_SCL	DIO	I2C bus group AO data input/output, master mode
I2CM_AO_B_SDA	DIO	I2C bus group AO data input/output, master mode
I2CS_AO_SCL	DI	I2C bus group AO data input, slave mode
I2CS_AO_SDA	DIO	I2C bus group AO data input, output slave mode

Table 4-24 eMMC Interface Signal Description

Signal Name	Type	Description
EMMC_D0	DIO	eMMC/NAND data bus bit 0 signal
EMMC_D1	DIO	eMMC/NAND data bus bit 1 signal
EMMC_D2	DIO	eMMC/NAND data bus bit 2 signal
EMMC_D3	DIO	eMMC/NAND data bus bit 3 signal
EMMC_D4	DIO	eMMC/NAND data bus bit 4 signal
EMMC_D5	DIO	eMMC/NAND data bus bit 5 signal
EMMC_D6	DIO	eMMC/NAND data bus bit 6 signal
EMMC_D7	DIO	eMMC/NAND data bus bit 7 signal
EMMC_CLK	DO	eMMC clock signal
EMMC_CMD	DIO	eMMC command signal
EMMC_DS	DI	eMMC data strobe

Table 4-25 HDMI Interface Signal Description

Signal Name	Type	Description
HDMIRX_A_HPD	OD_5V	HDMI RX port A hot plug in signal output
HDMIRX_A_5VDET	OD_5V	HDMI RX port A 5V power detection
HDMIRX_A_SDA	OD_5V	HDMI RX port A DDC_I2C interface data signal
HDMIRX_A_SCL	OD_5V	HDMI RX port A DDC_I2C interface clock signal
HDMIRX_B_HPD	OD_5V	HDMI RX port B hot plug in signal output
HDMIRX_B_5VDET	OD_5V	HDMI RX port B 5V power detection
HDMIRX_B_SDA	OD_5V	HDMI RX port B DDC_I2C interface data signal
HDMIRX_B_SCL	OD_5V	HDMI RX port B DDC_I2C interface clock signal

Amlogic Proprietary and Confidential
Copyright © Amlogic. All rights reserved.

Signal Name	Type	Description
HDMIRX_C_HPD	OD_5V	HDMI RX port C hot plug in signal output
HDMIRX_C_5VDET	OD_5V	HDMI RX port C 5V power detection
HDMIRX_C_SDA	OD_5V	HDMI RX port C DDC_I2C interface data signal
HDMIRX_C_SCL	OD_5V	HDMI RX port C DDC_I2C interface clock signal
HDMITX_SDA	OD_5V	HDMI TX DDC_I2C interface data signal
HDMITX_SCL	OD_5V	HDMI TX DDC_I2C interface clock signal
HDMITX_HPD_IN	OD_5V	HDMI TX hot-plug in signal input
CEC_A	OD_5V	Customer Electronics Control signal
CEC_B	OD_5V	2nd pin of Customer Electronics Control signal

Table 4-26 SPIF Interface Signal Description

Signal Name	Type	Description
SPIF_CS	DO	SPIF chip select
SPIF_CLK	DO	SPIF Serial Clock
SPIF_MO	DIO	SPIF 1bit mode Output, 2/4 bit mode data I/O 0
SPIF_MI	DIO	SPIF 1bit mode Input, 2/4 bit mode data I/O 1
SPIF_WP	DIO	SPIF Write protection output, 4 bit mode data I/O 2
SPIF_HOLD	DIO	SPIF bus hold output, 4 bit mode data I/O 3

Table 4-27 SPDIF Interface Signal Description

Signal Name	Type	Description
SPDIF_IN	DI	SPDIF input signal
SPDIF_OUT	DO	SPDIF output signal

Table 4-28 PCIE Interface Signal Description

Signal Name	Type	Description
PCIECK_REQN	DI	PCIE clock request input

Table 4-29 SPI Interface Signal Description

Signal Name	Type	Description
SPI_A_MOSI	DIO	SPI master output, slave input A
SPI_A_MISO	DIO	SPI master input, slave output A
SPI_A_SCLK	DIO	SPI clock A
SPI_A_SS0	DIO	SPI slave select 0 A
SPI_A_SS1	DIO	SPI slave select 1 A
SPI_A_SS2	DIO	SPI slave select 2 A
SPI_B_MOSI	DIO	SPI master output, slave input B

Amlogic Proprietary and Confidential
Copyright © Amlogic. All rights reserved.

Signal Name	Type	Description
SPI_B_MISO	DIO	SPI master input, slave output B
SPI_B_SCLK	DIO	SPI clock B
SPI_B_SS0	DIO	SPI slave select 0 B
SPI_B_SS1	DIO	SPI slave select 1 B
SPI_B_SS2	DIO	SPI slave select 2 B
SPI_C_MOSI	DIO	SPI master output, slave input C
SPI_C_MISO	DIO	SPI master input, slave output C
SPI_C_SCLK	DIO	SPI clock C
SPI_C_SS0	DIO	SPI slave select 0 C
SPI_C_SS1	DIO	SPI slave select 1 C
SPI_C_SS2	DIO	SPI slave select 2 C
SPI_D_MOSI	DIO	SPI master output, slave input D
SPI_D_MISO	DIO	SPI master input, slave output D
SPI_D_SCLK	DIO	SPI clock D
SPI_D_SS0	DIO	SPI slave select 0 D
SPI_E_MOSI	DIO	SPI master output, slave input E
SPI_E_MISO	DIO	SPI master input, slave output E
SPI_E_SCLK	DIO	SPI clock E
SPI_E_SS0	DIO	SPI slave select 0 E
SPI_F_MOSI	DIO	SPI master output, slave input F
SPI_F_MISO	DIO	SPI master input, slave output F
SPI_F_SCLK	DIO	SPI clock F
SPI_F_SS0	DIO	SPI slave select 0 F

Table 4-30 Remote Interface Signal Description

Signal Name	Type	Description
IR_IN	DI	IR remote control input
IR_OUT	DO	IR remote control output

Table 4-31 Time Division Multiplexing Signal Description

Signal Name	Type	Description
MCLK_1	DO	Master clock output 1, for I2S master mode
MCLK_2	DO	Master clock output 2, for I2S master mode
TDM_D0	DIO	Data input/output 0 of TDM
TDM_D1	DIO	Data input/output 1 of TDM
TDM_D2	DIO	Data input/output 2 of TDM

Amlogic Proprietary and Confidential
Copyright © Amlogic. All rights reserved.

Signal Name	Type	Description
TDM_D3	DIO	Data input/output 3 of TDM
TDM_D4	DIO	Data input/output 4 of TDM
TDM_D5	DIO	Data input/output 5 of TDM
TDM_D6	DIO	Data input/output 6 of TDM
TDM_D7	DIO	Data input/output 7 of TDM
TDM_D8	DIO	Data input/output 8 of TDM
TDM_D9	DIO	Data input/output 9 of TDM
TDM_D10	DIO	Data input/output 10 of TDM
TDM_D11	DIO	Data input/output 11 of TDM
TDM_D12	DIO	Data input/output 12 of TDM
TDM_D13	DIO	Data input/output 13 of TDM
TDM_D14	DIO	Data input/output 14 of TDM
TDM_D15	DIO	Data input/output 15 of TDM
TDM_SCLK0	DIO	Bit clock output of TDM
TDM_FS0	DIO	Frame sync output of TDM (Word clock of I2S)
TDM_SCLK1	DIO	Bit clock output of TDM
TDM_FS1	DIO	Frame sync output of TDM (Word clock of I2S)
TDM_SCLK2	DIO	Bit clock output of TDM
TDM_FS2	DIO	Frame sync output of TDM (Word clock of I2S)
TDM_SCLK3	DIO	Bit clock output of TDM
TDM_FS3	DIO	Frame sync output of TDM (Word clock of I2S)

Table 4-32 PDM Signal Description

Signal Name	Type	Description
PDM_DIN0	DI	PDM input data 0 signal
PDM_DIN1	DI	PDM input data 1 signal
PDM_DIN2	DI	PDM input data 2 signal
PDM_DIN3	DI	PDM input data 3 signal
PDM_DCLK	DO	PDM output clock signal

Table 4-33 JTAG Interface Signal Description

Signal Name	Type	Description
JTAG_A_TDO	DO	JTAG data output channel A
JTAG_A _TDI	DI	JTAG data input channel A
JTAG_A_TMS	DI	JTAG Test mode select input channel A
JTAG_A_CLK	DO	JTAG Test clock input channel A

Amlogic Proprietary and Confidential
Copyright © Amlogic. All rights reserved.

Signal Name	Type	Description
JTAG_B_TDO	DO	JTAG data output channel B
JTAG_B _TDI	DI	JTAG data input channel B
JTAG_B_TMS	DI	JTAG Test mode select input channel B
JTAG_B _CLK	DO	JTAG Test clock input channel B

Table 4-34 Ethernet Interface Signal Description

Signal Name	Type	Description
ETH_LINK_LED	DO	Ethernet link LED indicator
ETH_ACT_LED	DO	Ethernet active LED indicator
ETH_RGMII_RX_CLK	DI	Ethernet RGMII interface receive clock input
ETH_RGMII_TX_CLK	DIO	Ethernet RGMII transmit clock
ETH_TXEN	DIO	Ethernet RMII/RGMII Interface transmit enable
ETH_TXD3_RGMII	DIO	Ethernet RGMII interface transmit data 3
ETH_TXD2_RGMII	DIO	Ethernet RGMII interface transmit data 2
ETH_TXD1	DIO	Ethernet RMII/RGMII interface transmit data 1
ETH_TXD0	DIO	Ethernet RMII/RGMII interface transmit data 0
ETH_RX_DV	DI	Ethernet RMII/RGMII interface receive data valid signal
ETH_RXD3_RGMII	DI	Ethernet RGMII interface receive data 3
ETH_RXD2_RGMII	DI	Ethernet RGMII interface receive data 2
ETH_RXD1	DI	Ethernet RMII/RGMII interface receive data 1
ETH_RXD0	DI	Ethernet RMII/RGMII interface receive data 0
ETH_MDIO	DIO	Ethernet SMI interface management data input/output
ETH_MDC	DO	Ethernet SMI interface management clock

Note

IO interfaces supporting 200Mbps data rate or 100M clock and above must be powered by 1.8V instead of 3.3V. For example, eMMC (HS200/400 mode) or RGMII interface must be powered by 1.8V.

Table 4-35 Other Signal Description

Signal Name	Type	Description
RTC_CLK_OUT	DO	RTC32.768 KHz clock output
WD_RSTO	DO	WD_RSTO Watchdog output
MIC_MUTE_KEY	DI	MIC MUTE KEY detect signal
MIC_MUTE_LED	DIO	MIC MUTE state output signal
HSYNC	DIO	Horizontal synchronized signal
VSYNC	DIO	Vertical synchronized signal

Amlogic Proprietary and Confidential
Copyright © Amlogic. All rights reserved.

Signal Name	Type	Description
3D_SYNC_OUT	DIO	3D sync signal for 3D Pnale
VX1_A_HTPDN	DI	VX1 channel A hot plug detect
VX1_B_HTPDN	DI	VX1 channel B hot plug detect
VX1_A_LOCKN	DI	VX1 channel A lock detect
VX1_B_LOCKN	DI	VX1 channel B lock detect
eDP_A_HPD	DI	eDP panel A hot plug detect
eDP_B_HPD	DI	eDP panel B hot plug detect

Table 4-36 Other Signal Description

Signal Name	Type	Description
GEN_CLK_OUT	DO	General clock output, for debug

Amlogic Proprietary and Confidential
Copyright © Amlogic. All rights reserved.

5 Operating Conditions

5.1 Absolute Maximum Ratings

The table below gives the absolute maximum ratings. Exposure to stresses beyond those listed in this table may result in permanent device damage, unreliability or both.

Table 5-1 Absolute Maximum Ratings

Characteristic	Value	Unit
VDDCPU_A/B Supply Voltage	1.15	V
VDD_EE Supply Voltage	1.0	V
VDD_NPU Supply Voltage	1.0	V
VDD_GPU Supply Voltage	1.0	V
VDD_DDR Supply Voltage	1.0	V
VDDQ Supply Voltage	1.4	V
VDDQLP Supply Voltage	1.4	V
AVDD_DDR0PLL	1.98	V
AVDD_DDR1PLL	1.98	V
1.8V Supply Voltage	1.98	V
3.3V Supply Voltage	3.63	V
Input voltage, V_I	-0.3 ~ VDDIO+0.3	V
Junction Temperature	125	°C

5.2 Recommended Operating Conditions

Table 5-2 Recommended Operating Conditions

Symbol	Parameter	Min.	Typ.	Max.	Unit
VDDCPU	Voltage for Cortex CPU	0.68[1]	-	1.03[2]	V
VDD_EE and other 0.8V domain	Voltage for core logic	0.77	0.83	0.9[2]	V
VDD_GPU	Voltage for GPU	0.77	0.83	0.9[2]	V
VDD_NPU	Voltage for NNA	0.77	0.83	0.9[2]	V
VDD_DDR[6]	Voltage for DDR	0.77	0.80~-0.84	0.9	V
VDDQ	DDR IO Supply Voltage	1.06	-	1.26	V
VDDQLP[5]	DDR IO Supply Voltage	0.57	-	1.26	V
AVDD18	1.8V AVDD for HDMI, USB, SARADC, PCIe, AUDIO, MIPI_DSI, MIPI_CSI and ETHERNET phy.	1.74	1.80	1.89	V
VDD18_AO	1.8V VDD for XTAL, SARADC, efuse and IOVREF	1.74	1.80	1.89	V

Amlogic Proprietary and Confidential
Copyright © Amlogic. All rights reserved.

Symbol	Parameter	Min.	Typ.	Max.	Unit
AVDD_DDR0PLL and AVDD_ DDR1PLL	Analog power supply for DDRPLL module	1.06	-	1.89	V
AVDD33	3.3V AVDD for USB and HDMI RX	3.15	3.3	3.45	V
VDDIO	LV mode	1.71	1.80	1.89	V
	HV mode	3.0[3]	3.3	3.45	V
T_J	Operating Junction Temperature	0	-	105[4]	°C
T_A	Operating Ambient Temperature	0	-	70	°C

Note

1. Minimal VDDCPU_A/B voltage is for sleep mode while system runs at very low speed. Higher clock will need higher voltage. Considering the power supply may have 2% deviation, the minimal voltage in actual application should not be set to lower than min spec plus 0.02V.
2. Likewise, maximum VDDCPU_A/B voltage in actual application should not be higher than max spec minus 0.02V. Voltage of VDDCPU_A/B will affect CPU speed. Use lower voltage when CPU runs on lower speed to save power. Recommend to use +/-1.5% or higher precision DCDC.
3. GPIO cannot work if VDDIO voltage is out of the spec of LV / HV mode. GPIO output at HV mode will be weaker & max operating speed will be lower if VDDIO are design to 3.0V. Do not design VDDIO to lower than 3.0V in HV mode, recommend to use +/-1.5% or higher precision DCDC to supply power for VDDIO, actual voltage supplies to VDDIO (HV mode) should not be lower than 2.9V.
4. For operating temperature, good heat sink may be needed to guarantee T_J < max spec.
5. When not in LPDDRx mode, the VDDQLP supply pin should be tied to the VDDQ supply.
6. The minimum and typical voltage of VDD_DDR needs to be increased by 0.3V(Min 0.80V and Typ 0.83V) When the target rate is >3733Mbps for LPDDR4 and LPDDR4X mode.
7. The voltage requirements is for DC level.
8. IO interfaces supporting 200Mbps data rate or 100M clock and above must be powered by 1.8V instead of 3.3V. For example, eMMC (HS200/400 mode) or RGMII interface must be powered by 1.8V.

5.3 Ripple Voltage Specifications

Table 5-3 Ripple Voltage Specifications

Power	Max Ripple	Unit	Test State
VDDCPU_A	40	+/-mV	Run APK StabilityTest
VDDCPU_B	40	+/-mV	Run APK StabilityTest
VDD_EE and other 0.8V domain	40	+/-mV	Play 4K video
VDD_NPU	40	+/-mV	
VDD_GPU	70	+/-mV	Run APK Basemark ES 2.0 Taiji
DDR4 VDD_DDR	40	+/-mV	Kernel boot

Amlogic Proprietary and Confidential
Copyright © Amlogic. All rights reserved.

Power	Max Ripple	Unit	Test State
LPDDR4/LPDDR4 VDD_DDR	32	+/-mV	Kernel boot
DDR4 VDDQ and AVDD_DDR0PLL, AVDD_DDR1PLL	60	+/-mV	Kernel boot
LPDDR4/LPDDR4X VDDQ and AVDD_DDR0PLL,AVDD_DDR1PLL	27.5	+/-mV	Kernel boot
LPDDR4 VDDQLP	45	+/-mV	Kernel boot
LPDDR4X VDDQLP	30	+/-mV	Kernel boot
AVDD18	30	+/-mV	Kernel boot
VDD18_AO_XTAL	30	+/-mV	Kernel boot
AVDD33	50	+/-mV	WIFI SCAN
VDDIO LV	60	+/-mV	Kernel boot
VDDIO HV	60	+/-mV	WIFI SCAN

Note

The ripple specifications are for reference only. Customers should perform pressure / performance / reliability tests (high / low temperature tests, wet / heat tests, functional tests, etc.) on the product to confirm system stability.

5.4 Thermal Resistance

Jedec 2P2S board 101.5mm*114.5mm, natural convection, ambient temperature 25°C.

Symbol	Parameter	Value(°C/ Watt)	Air Flow(m/s)
Θ_{JA}	Package junction-to- ambiance thermal resistance in nature convection	12.6	0
Θ_{JB}	Package junction-to-pcb thermal resistance in nature convection	2.9	0
Θ_{JC}	Package junction-to-case thermal resistance in nature convection	0.1	0

Note

1. Due to the thinness of the SOC, DRAM or capacitors placed close to SOC may prevent heat-sink touching SOC top side. A special convex shape heatsink is recommended.
2. For more information, check the following JEDEC standards:
   - JESD51-2A: Integrated Circuits Thermal Test Method Environmental Conditions - Natural Convection (Still Air)
   - JESD51-8: Integrated Circuit Thermal Test Method Environmental Conditions -Junction-to-Board
   - JESD51-12: Guidelines for Reporting and Using Electronic Package Thermal Information
3. m/s = meters per second

Amlogic Proprietary and Confidential
Copyright © Amlogic. All rights reserved.

5.5 DC Electrical Characteristics

5.5.1 Normal GPIO Specifications

Table 5-4 Normal GPIO Specifications (For DIO)

Symbol	Parameter	Min.	Typ.	Max.	Unit
$V_{iH(VDDIO=3.3V)}$	High-level input voltage	IOVREF +0.37	-	VDDIO+0.3	V
$V_{iL(VDDIO=3.3V)}$	Low-level input voltage	-0.3	-	IOVREF-0.23	V
$V_{iH(VDDIO=1.8V)}$	High-level input voltage	IOVREF/2 +0.3	-	VDDIO+0.3	V
$V_{iL(VDDIO=1.8V)}$	Low-level input voltage	-0.3	-	IOVREF/2-0.3	V
$R_{PU/PD}$	Built-in pull up/down resistor	-	41K		ohm
IoL/IoH(DS=0)[4]	GPIO driving capability	0.5	-	-	mA
IoL/IoH(DS=1)	GPIO driving capability	2.5	-	-	mA
IoL/IoH(DS=2)	GPIO driving capability	3	-	-	mA
IoL/IoH(DS=3)	GPIO driving capability	4[1]	-	-	mA
VOH	Output high level with IoL/ IoH loading	VDDIO-0.5	-	-	V
VOL	Output low level with IoL/ IoH loading	-	-	0.4	V

Note

1. With Minimal IoL/IoH driving capability loading, IO is garanteed to meet Vol < 0.4V or VOH > (VDDIO-0.5V) spec.
2. Maximal GPIO loading is 6mA for application such as driving LED, which does not care about Vol/Voh spec. Please set DS=3 for such application.
3. VDD18_AO supplies power to IOVREF.
4. Do not use this setting, it's too weak for most applications.

5.5.2 Open Drain GPIO Specifications (For DIO_OD)

Symbol	Parameter	Min.	Typ.	Max.	Unit
V_{iH}(OD5V)	High-level input voltage	1.5		5.5	V
V_{iL}(OD5V)	Low-level input voltage	-0.3		0.8	V
$R_{PU/PD}$	No built-in pull up/down resistor on OD IO	-	-	-	ohm

Amlogic Proprietary and Confidential
Copyright © Amlogic. All rights reserved.

Symbol	Parameter	Min.	Typ.	Max.	Unit
Io	OD IO driving low capability	4		6	mA
VOL	Output low level with min Io loading			0.4	V

Note

1. With Minimal IoL driving capability loading, IO is guaranteed to meet Vol<0.4V spec
2. Maximal GPIO loading is 6mA for application such as driving LED, which does not care about Vol spec
3. The V_{iL} / V_{iH} of OD PAD is irrelevant to VDDIO voltage.
4. “OD 5V” means that in applications such as I2C, use a resistor greater than 1Kohm to pull it up to 5V. Do not connect the pad directly to the 5V power supply.

5.5.3 DDR4/LPDDR4/LPDDR4X SDRAM Specifications

Table 5-5 Recommended Operating Conditions

Symbol	Parameter	Min.	Typ.	Max.	Unit
VDDQ	PHY supply voltage (DDR4)	1.14	1.20	1.26	V
VDDQ[1]	PHY supply voltage (LPDDR4)	1.06	1.1	1.17	V
VDDQ[1]	PHY supply voltage (LPDDR4X)	1.06	1.1	1.17	V
VDDQLP	IO supply voltage (DDR4)	1.14	1.20	1.26	V
VDDQL-P[2]	IO supply voltage (LPDDR4)	1.06	1.1	1.17	V
VDDQL-P[3]	IO supply voltage (LPDDR4X)	0.57	0.6	0.65	V
Vref	Input reference supply voltage	0.49*VDDQ	0.5*VDDQ	0.51*VDDQ	V

Note

1. The minimum and typical voltage of VDDQ needs to be increased by 0.3V(Min 1.09V and Typ 1.13V) When the target rate is >3733Mbps for LPDDR4 and LPDDR4X mode.
2. The minimum and typical voltage of VDDQLP needs to be increased by 0.3V(Min 1.09V and Typ 1.13V) When the target rate is >3733Mbps for LPDDR4 mode.
3. The minimum and typical voltage of VDDQLP needs to be increased by 0.3V(Min 0.60V and Typ 0.63V) When the target rate is >3733Mbps for LPDDR4X mode.

Amlogic Proprietary and Confidential
Copyright © Amlogic. All rights reserved.

Table 5-6 Address and command DC specifications – DDR4 Mode

Symbol	Parameter	Min.	Typ.	Max.	Unit
VdlVW_total	Rx Mask voltage-p-p total			136	mv
VOH	DC output logic high	0.9*VDDQ			V
VOL	DC output logic low			0.1*VDDQ	V
RTT	Input termination resistance to VDDQ	200	240	280	ohm
		100	120	140	
		67	80	93	
		50	60	70	
		42	48	56	
		34	40	46	
		28	34	40	

Table 5-7 Address and command DC Specifications – LPDDR4 Mode

Symbol	Parameter	Min.	Typ.	Max.	Unit
VOH	DC output logic high	0.9*VDDQ	-	-	V
VOL	DC output logic low	-	-	0.1*VDDQ	V
RTT	Input termination resistance to VDDQ	216	240	264	ohm
		108	120	132	
		72	80	88	
		54	60	66	
		43.2	48	52.8	
		36	40	44	

Table 5-8 Address and command DC Specifications – LPDDR4X Mode

Symbol	Parameter	Min.	Typ.	Max.	Unit
VOH	DC output logic high	0.8*VDDQ	-	-	V
VOL	DC output logic low	-	-	0.2*VDDQ	V
RTT	Input termination resistance to VDDQ	216	240	264	ohm
		108	120	132	
		72	80	88	
		54	60	66	
		43.2	48	52.8	
		36	40	44	

5.6 Timing Information

Amlogic Proprietary and Confidential
Copyright © Amlogic. All rights reserved.

5.6.1 I2C Timing Specification

The I2C master interface Fast/Standard mode timing specifications are shown below.

Figure 5-1 I2C Interface Timing Diagram, FS mode

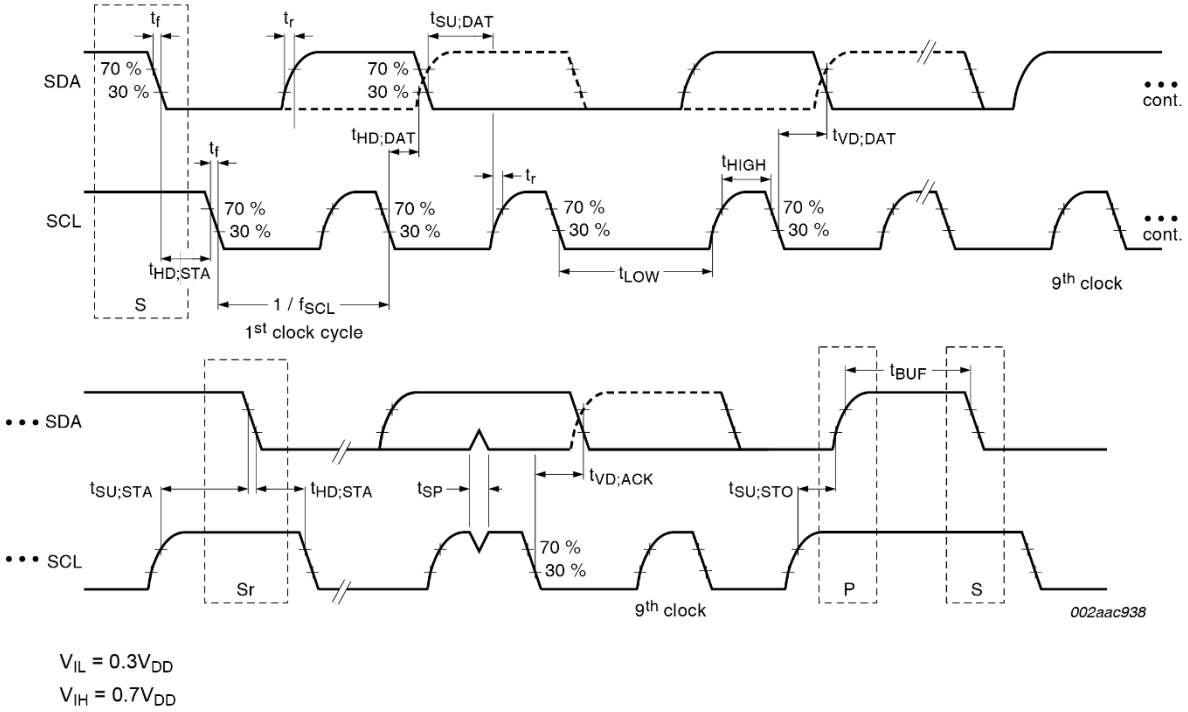

$V_{IL} = 0.3V_{DD}$

$V_{IH} = 0.7V_{DD}$

Table 5-9 I2C Interface Timing Specification, SF mode

Symbol	Parameter	Standard-mode		Fast-mode		Unit
		Min.	Max	Min	Max	
tR	Rise time of SDA and SCL signals	-	1000	-	300	ns
tF	Fall time of SDA and SCL signals	-	300	-	300	ns
fSCL	SCL clock frequency	-	100	-	400	KHz
tLOW	LOW period of the SCL clock	4.7	-	1.3	-	μs
tHIGH	HIGH period of the SCL clock	4	-	0.6	-	μs
tSu;STA	Setup time for START	4.7	-	0.6	-	μs
tSu;DAT	Setup time for SDA	250	-	100	-	ns
tSu;STO	Setup time for STOP	4	-	0.6	-	μs

Amlogic Proprietary and Confidential
Copyright © Amlogic. All rights reserved.

Symbol	Parameter	Standard-mode		Fast-mode		Unit
		Min.	Max	Min	Max	
tHd;STA	Hold time for START	4	-	0.6	-	µs
tHd;DAT	Hold time for SDA	0	3.45	0	0.9	µs
tBuf	Bus free time between stop and start	4.7	-	1.3	-	µs

Note

Open drain does not support driver strength adjustment.

5.6.2 EMMC/SD Timing Specification

Timing specification for EMMC and SDIO are shown as below.

Figure 5-2 EMMC HS400 Data Output Timing

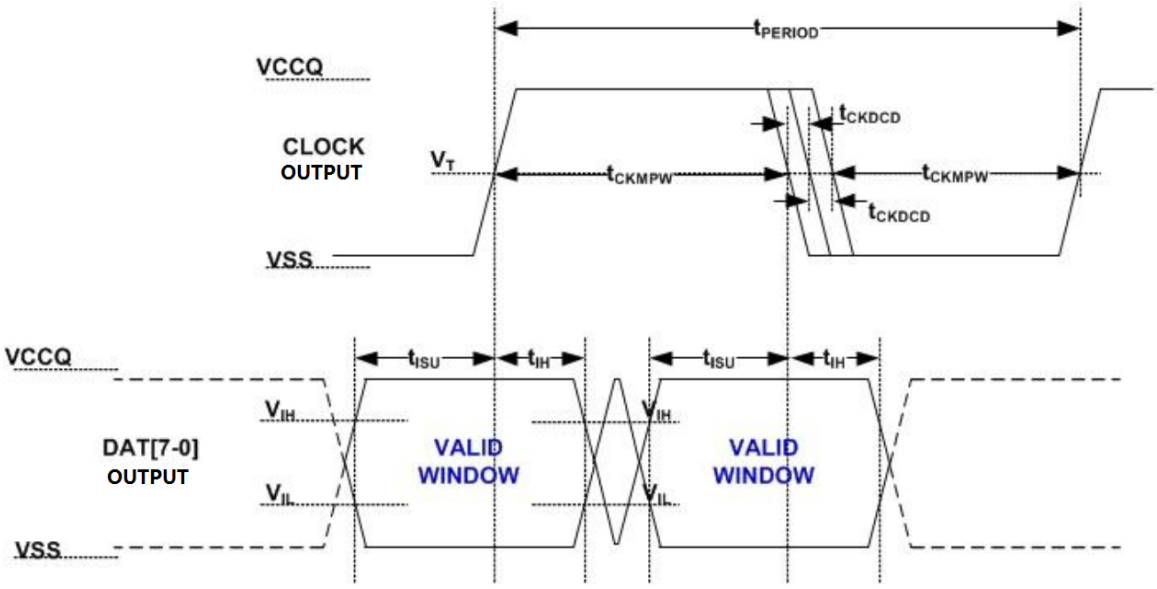

NOTE $V_T = 50\%$ of V_{CCQ}, indicates clock reference point for timing measurements.

Table 5-10 HS400 Timing Specification

Symbol	Parameter	Min	Max	Unit
tPERIOD	Cycle time data transfer mode	5	-	ns
SR	Slew rate	1.125	-	V/ns
tCKDCD	Duty cycle distortion	0	0.3	ns
tCKMPW	Minimum pulse width	2.2	-	ns
tISU	input set-up time	1.4	-	ns
tIH	input hold time	0.8	-	ns

Amlogic Proprietary and Confidential
Copyright © Amlogic. All rights reserved.

Symbol	Parameter	Min	Max	Unit
tISUddr	input set-up time	0.4	-	ns
tIHddr	input hold time	0.4	-	ns

Figure 5-3 EMMC HS200 Data Output Timing

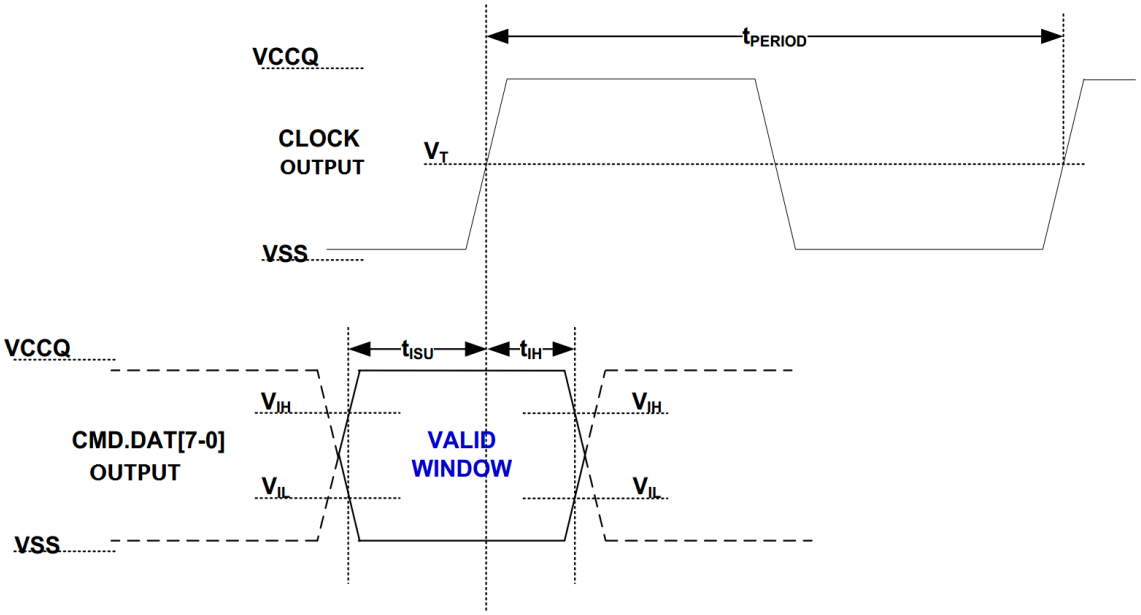

Table 5-11 HS200 Timing Specification

Symbol	Parameter	Min	Max	Unit
tPERIOD	Cycle time data transfer mode	5	-	ns
tISU	output set-up time	1.4	-	ns
tIH	output hold time	0.8	-	ns

Amlogic Proprietary and Confidential
Copyright © Amlogic. All rights reserved.

Figure 5-4 EMMC HS400 Data Input Timing

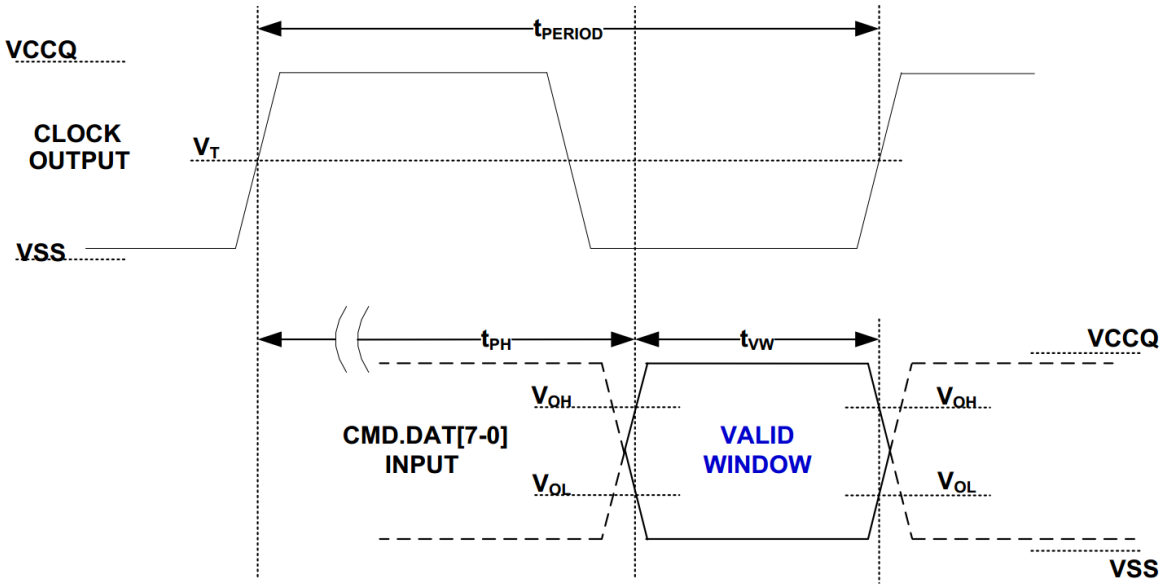

Table 5-12 HS400 Data Input Timing Specification

Symbol	Parameter	Min	Max	Unit
tPERIOD	Cycle time data transfer mode	5	-	ns
SR	Slew rate	1.125	-	V/ns
tCKDCD	Duty cycle distortion	0	0.2	ns
tCKMPW	Minimum pulse width	2	-	ns
tRQ	Input skew	-	0.4	ns
tRQH	input hold skew	-	0.4	ns

Amlogic Proprietary and Confidential
Copyright © Amlogic. All rights reserved.

Figure 5-5 EMMC HS200 Data Input Timing

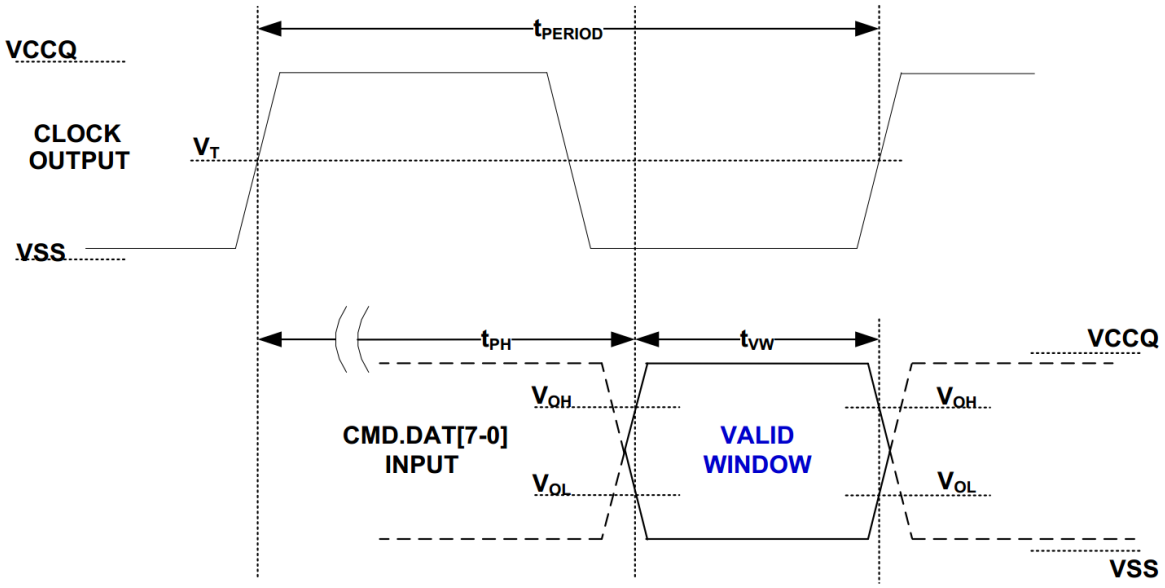

Table 5-13 HS200 Timing Specification

Symbol	Parameter	Min	Max	Unit
tPH	Device output momentary phase from CLK input to CMD or DAT line output. Does not include a longterm temperature drift.	0	2	UI
ΔTPH	Delay variation due to temperature change after tuning. Total allowable shift of output valid window (TVW) from last system Tuning procedure ΔTPH is 2600ps for ΔT from -25 °C to 125 °C during operation.	-350(ΔT=-20deg.C)	1550(ΔT=90deg.C)	ps
tVW	Valid Data Simple window	0.575	-	UI

Figure 5-6 SDIO (SDR104) Clock Signal Timing Diagram

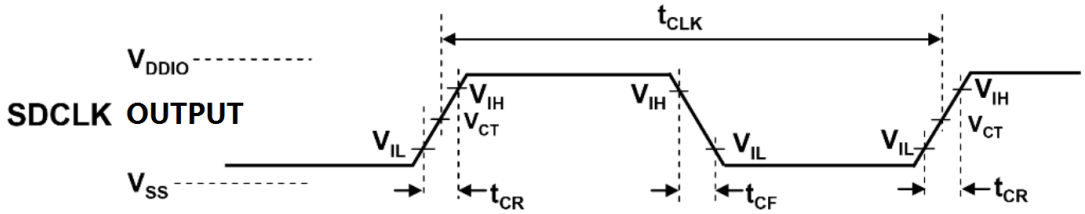

Amlogic Proprietary and Confidential
Copyright © Amlogic. All rights reserved.

Table 5-14 SDIO (SDR104) Clock Timing Specification

Symbol	Parameter (SDR104 Mode)	Min	Max	Unit
tCLK	clock period Data Transfer Mode (PP)	4.8	-	ns
Duty	Clock Duty	30	70	%
tCR	clock rise time	-	0.96	ns
tCF	clock fall time	-	0.96	ns

Figure 5-7 SDIO (SDR104) Output Timing Diagram

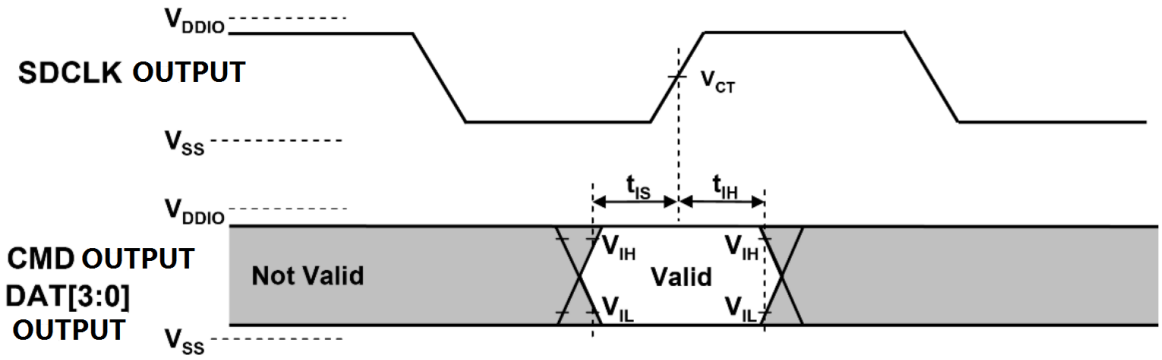

Table 5-15 SDIO (SDR104) Output Timing Specification

Inputs CMD, DAT (referenced to CLK)				
Symbol	**Parameter**	**Min**	**Max**	**Unit**
tIS	input set-up time	1.4	-	ns
tIH	input hold time	0.8	-	ns

Note

SD card interface uses SDIO protocol.

5.6.3 NAND Timing Specification

Nand timing specifications are shown as below.

Amlogic Proprietary and Confidential
Copyright © Amlogic. All rights reserved.

Figure 5-8 Async Waveform for Command/Address/Data Output Timing

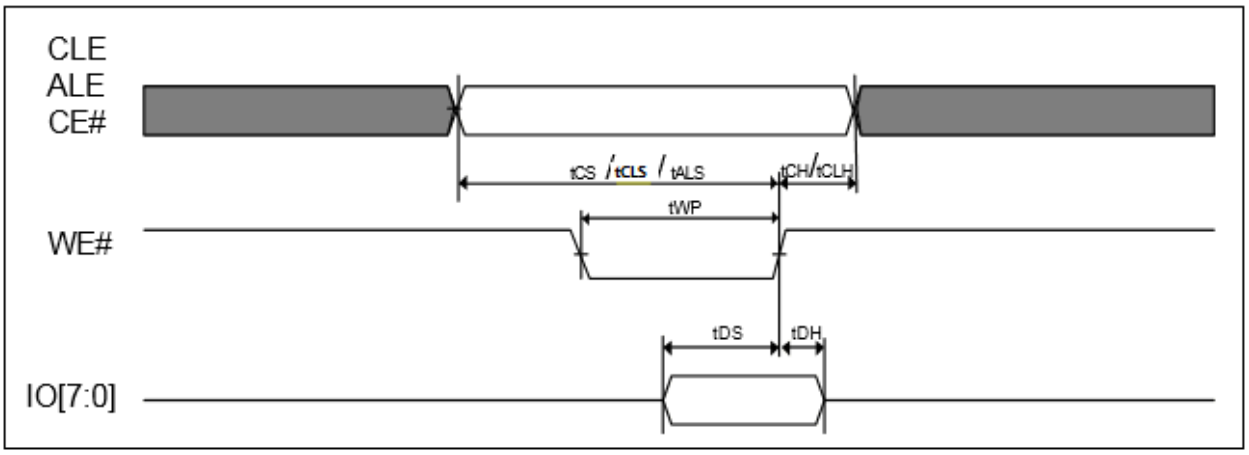

Figure 5-9 Async Waveform for Address Output Cycle

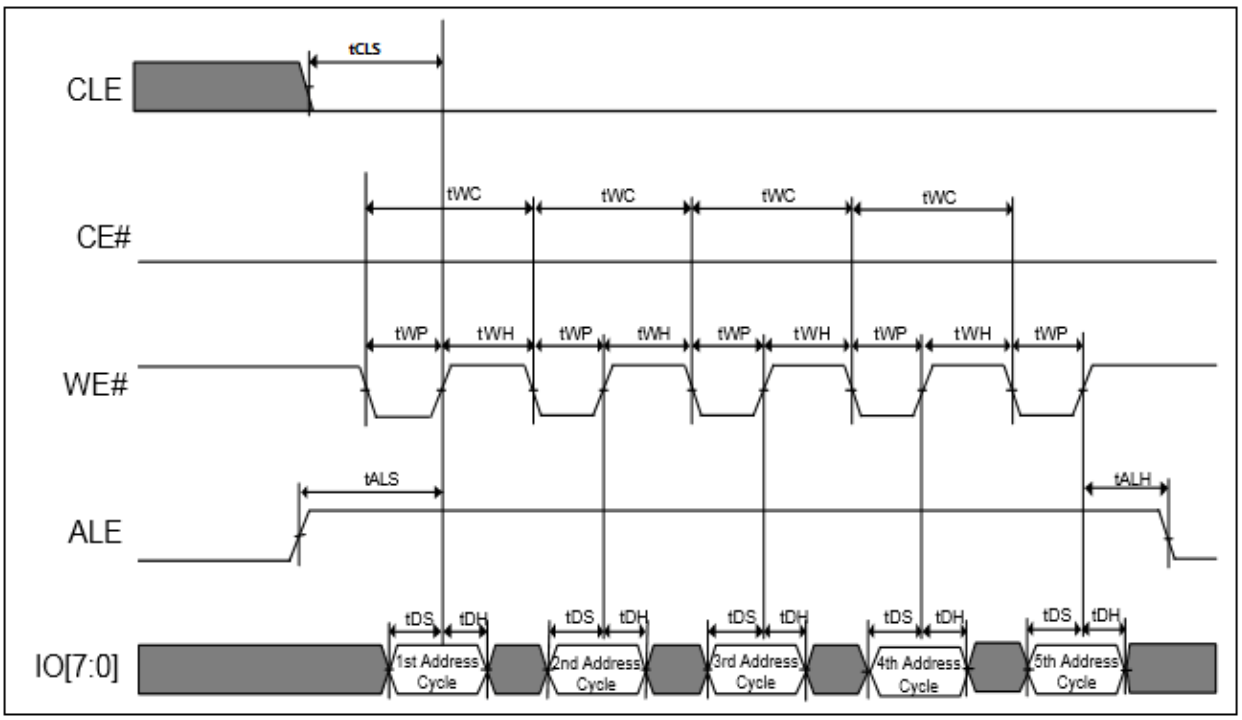

Amlogic Proprietary and Confidential
Copyright © Amlogic. All rights reserved.

Figure 5-10 Async Waveform for Sequential Data Read Cycle(After Read)-EOD Mode

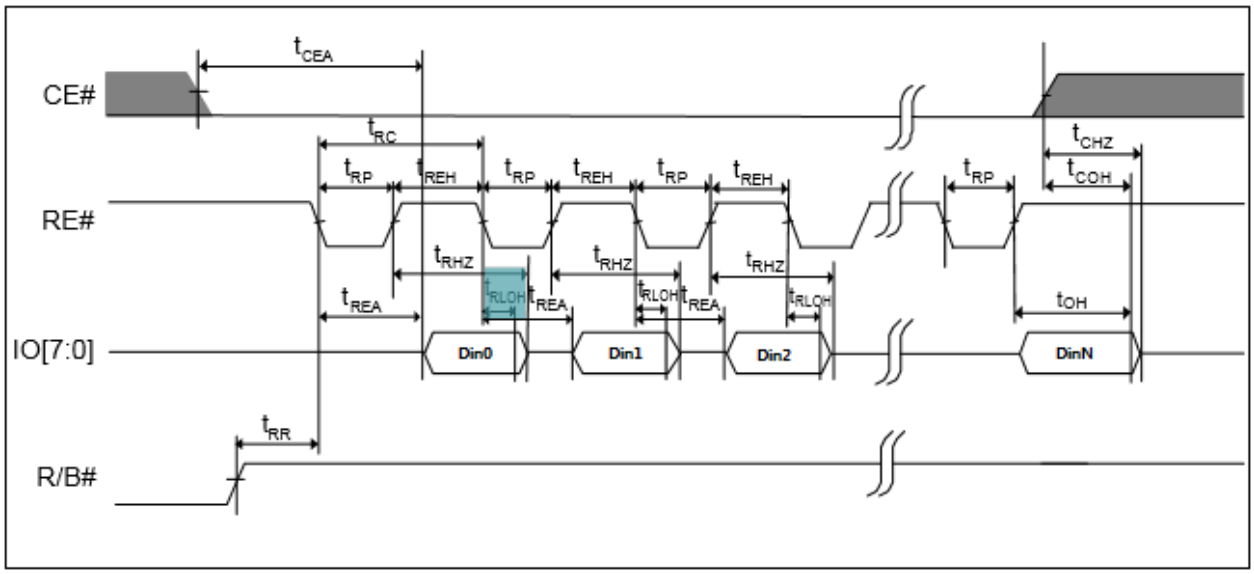

Table 5-16 Nand Timing Specifications

Symbol	Parameter (Asyn-chronous) (mode 5)	Min	Max	Unit
tCLS	CLE setup time	10	-	ns
tCLH	CLE hold time	5	-	ns
tALS	ALE setup	10	-	ns
tALH	ALE hold	5	-	ns
tDS	Data setup time	7	-	ns
tDH	Data hold time	5	-	ns
tWC	WE# cycle time	20	-	ns
tWP	WE# pulse width	10	-	ns
tWH	WE# high lold time	7	-	ns
tREA	RE# access time	-	16	ns
tOH	Data output hold time	15	-	ns
tRLOH	RE#-low to data hold time (EDO)	5	-	ns
tRP	RE# pulse width	10	-	ns
tREH	RE# high hold time	7	-	ns
tRC	RE# cycle time	20	-	ns

Amlogic Proprietary and Confidential
Copyright © Amlogic. All rights reserved.

5.6.4 SPICC Timing Specification

Figure 5-11 SPICC Timing Diagram

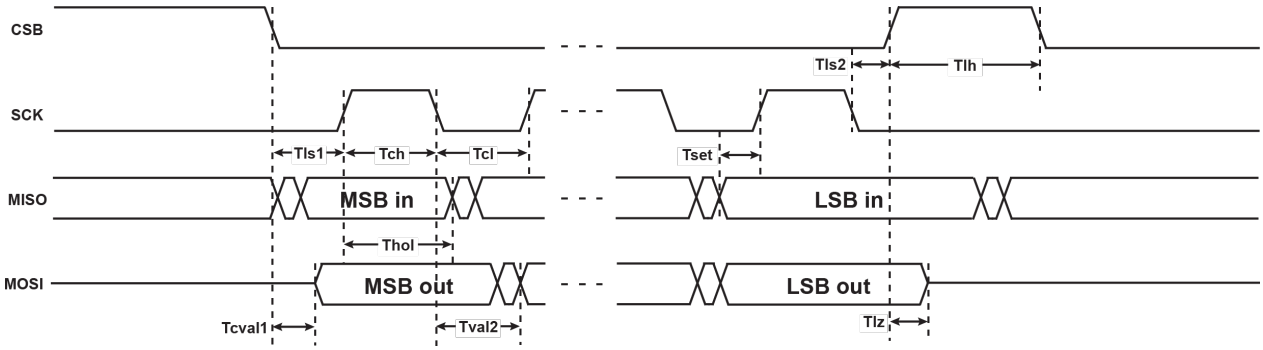

Table 5-17 SPICC Master Timing Specification

Symbol	Description	Min.	Max.	Unit
fCLK	Clock Frequency	1	80	MHz
TCH	Clock high time	5		ns
TCL	Clock low time	5		ns
TLS1	CS fall to First Rising CLK Edge	50		ns
TSET	Data input Setup Time	4		ns
THOL	Data input Hold Time	4		ns
TLH	Minimum idling time between transfers (minimum ss high time)	5		ns

5.6.5 SPIFC Timing Specification

Figure 5-12 SPIFC Serial Input Timing Diagram

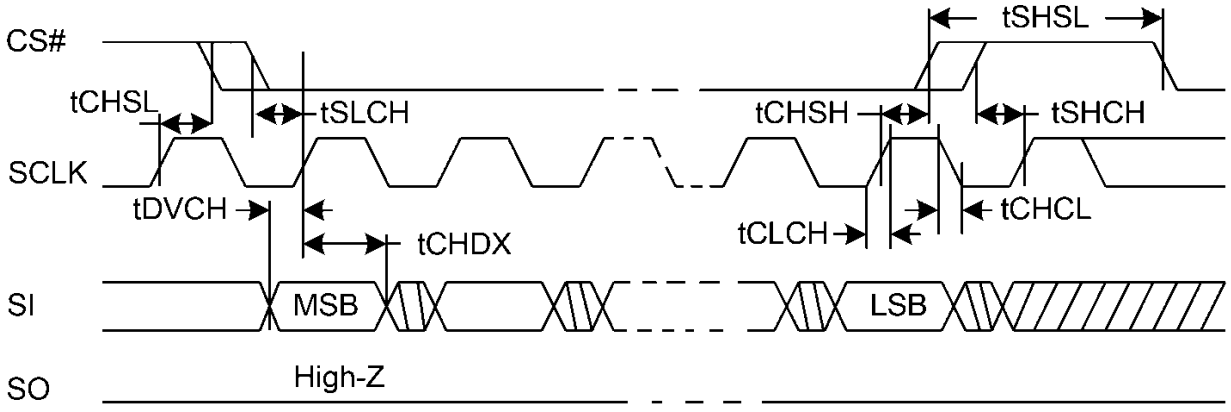

Amlogic Proprietary and Confidential
Copyright © Amlogic. All rights reserved.

Figure 5-13 SPIFC Out Timing Diagram

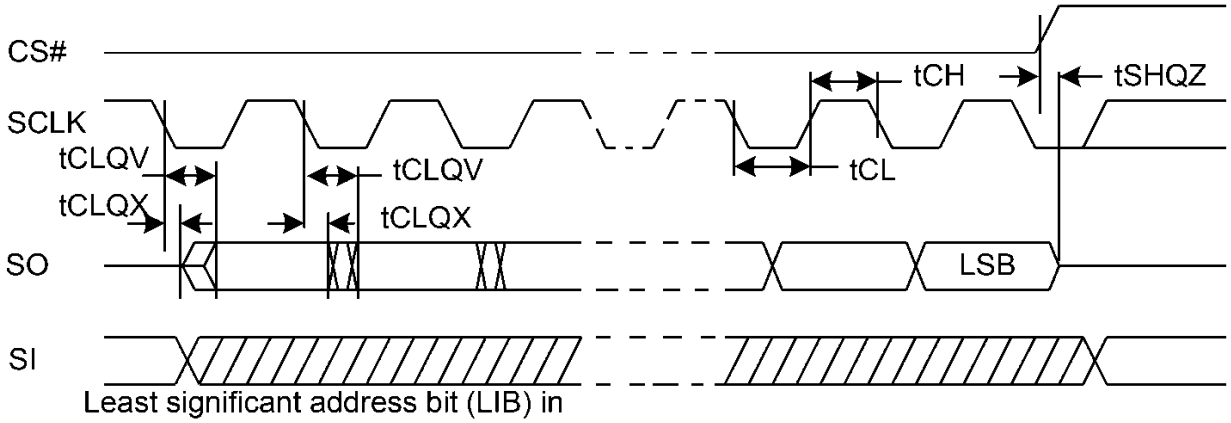

Table 5-18 SPIFC Master Timing Specification

Symbol	Parameter (Clock 41.7MHz)	Min	Max	Unit
fRSCLK	Clock Frequency for READ instructions		50	Mhz
tCH	Clock High Time	8		ns
tCL	Clock Low Time	8		ns
tCLCH	Clock Rise Time (peak to peak)	0.1		V/ns
tCHCL	Clock Fall Time (peak to peak)	0.1		V/ns
tSLCH	CS# Active Setup Time (relative to SCLK)	4	-	ns
tCHSH	CS# Active Hold Time (relative to SCLK)	4	-	ns
tDVCH	Data In Setup Time	2	-	ns
tCHDX	Data In Hold Time	3	-	ns
tSHQZ	Output Disable Time (relative to CS#)		8	ns
tCLQV	Clock Low to Output Valid		6	ns
tCLQX	Output Hold Time	1		ns

5.6.6 Ethernet Timing Specification

Figure 5-14 Management Data Timing Diagram

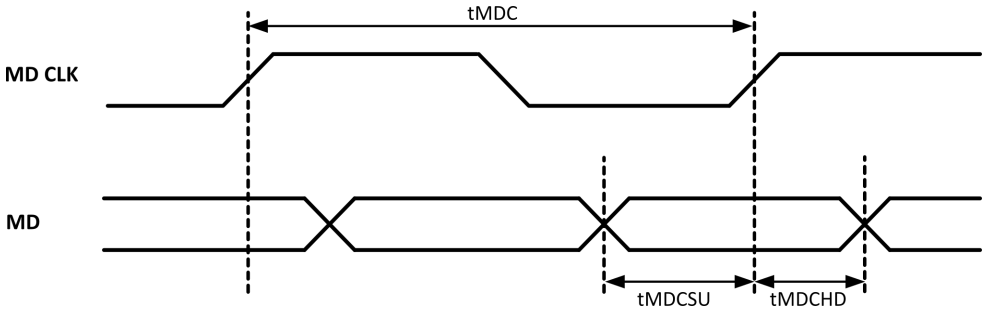

Amlogic Proprietary and Confidential
Copyright © Amlogic. All rights reserved.

Table 5-19 Management Data Timing Specification

Symbol	Description	Min.	Typ.	Max.	Unit	Notes
tMDC	MDC clock Period	400	500		ns	From MAC
tMDCSU	Setup time to rising edge of MDC	10			ns	
tMDCHD	Hold time to rising edge of MDC	10			ns	

Figure 5-15 RMII Timing Diagram

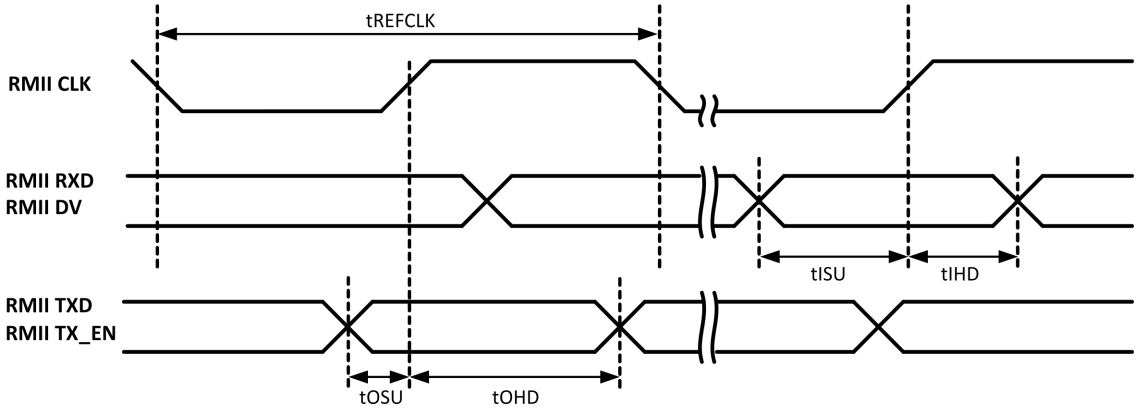

Table 5-20 RMII Timing Specification

Symbol	Description	Min.	Typ.	Max	Unit	Notes
tREFCLK	RMII clock period		20		ns	50MHz from PHY
tOSU	TXD & TX_ EN setup time to rising edge of RMII clock	1.8	10		ns	To PHY
tOHD	TXD & TX_ EN hold time to rising edge of RMII clock	1.4	10		ns	To PHY
tISU	RXD & DV setup time to rising edge of RMII clock	1.0	10		ns	From PHY
tIHD	RXD & DV hold time to rising edge of RMII clock	1.0	10		ns	From PHY

Amlogic Proprietary and Confidential
Copyright © Amlogic. All rights reserved.

Figure 5-16 RGMII Receive Timing Diagram

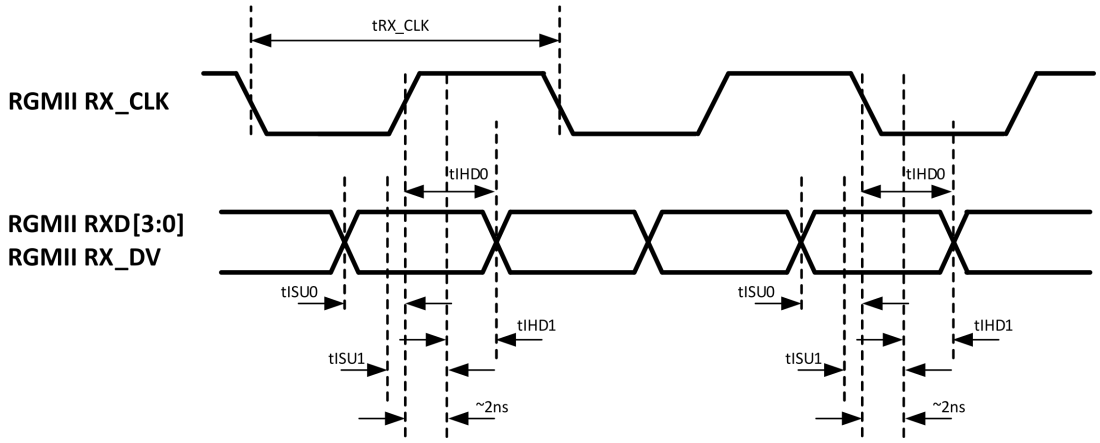

Table 5-21 RGMII Receive Timing Specification

Symbol	Description	Min.	Typ.	Max	Unit	Notes
tRX_CLK	RGMII RX_ CLK clock period		8		ns	125MHz from PHY
tSETUP	RXD[3:0] & RX_DV setup time (PHY internal delay enabled)	1.2			ns	From PHY
tHOLD	RXD[3:0] & RX_DV hold time (PHY internal delay enabled)	1.2			ns	From PHY
tSKEW	RXD[3:0] & RX_DV skew between these 5 signals (PHY internal delay disabled)	-0.5		0.5	ns	From PHY

When PHY internal delay is enabled, check setup/hold timing.

When PHY internal delay is disabled, check signal skew.

Amlogic Proprietary and Confidential
Copyright © Amlogic. All rights reserved.

Figure 5-17 RGMII Transmit Timing Diagram

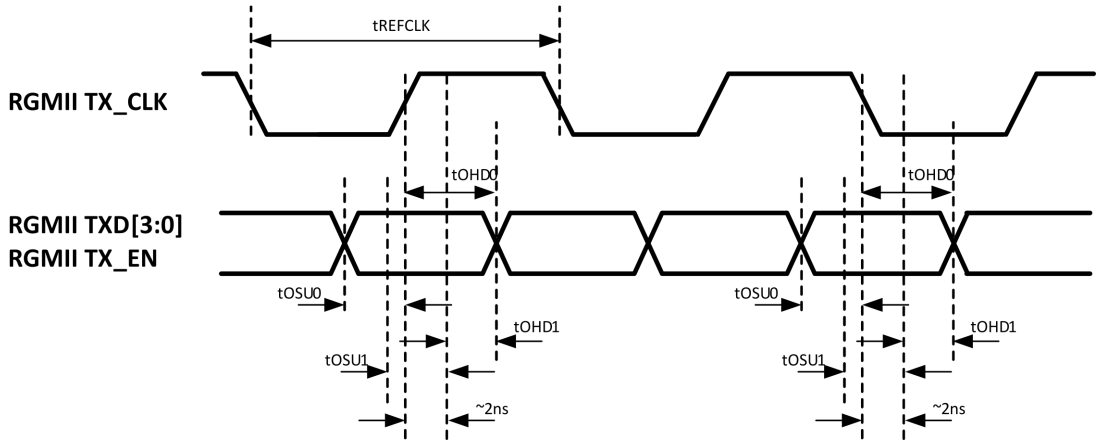

Table 5-22 RGMII Transmit Timing Specification

Symbol	Description	Min.	Typ.	Max	Unit	Notes
tTX_CLK	RGMII TX_ CLK clock period		8		ns	125MHz to PHY
tOSU	TXD & TX_ EN setup time to rising edge of RGMII clock (no clock delay added)	1			ns	From PHY
	TXD & TX_ EN setup time to rising edge of RGMII clock (clock delay added)	-0.9			ns	From PHY
tOHD	RXD & DV hold time to rising edge of RGMII clock (no clock de-lay added)	0.8			ns	From PHY
	RXD & DV hold time to rising edge of RGMII clock (clock delay added)	2.7			ns	From PHY

5.6.7 Audio Timing Specification

There are two modes for the audio I2S/TDM interface: Master mode and Slave mode, as shown below.

Amlogic Proprietary and Confidential
Copyright © Amlogic. All rights reserved.

Figure 5-18 I2S/TDM Timing Diagram, Master Mode

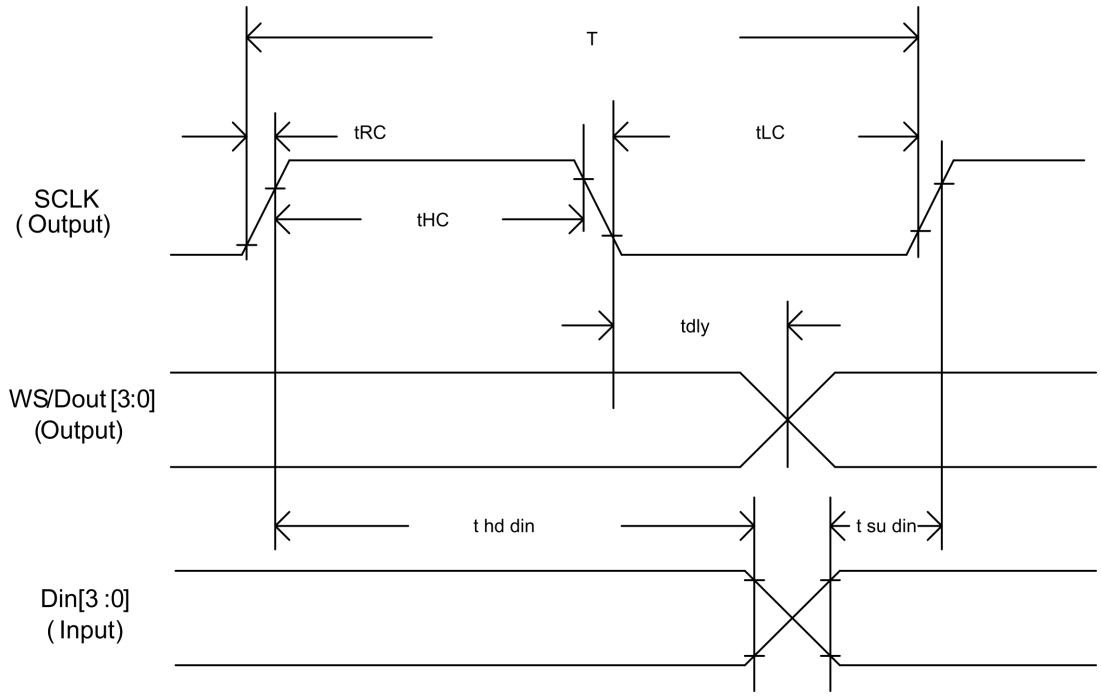

Table 5-23 Audio I2S/TDM Timing Specification, Transmitter, Master Mode

Transmitter (master mode)					
Symbol	**Parameter**	**Min**	**Typ**	**Max**	**Unit**
T	Clock period	10			ns
tHC	High level of SCLK	0.4			T
tLC	Low level of SCLK	0.4			T
tRC	Edge time of SCLK			0.15	T
tdly	Delay from SCLK to WS	-2	3	5	
tsuin	Setup time of Din	4			ns
thdin	Hold time of Din	4			ns

Note

Measure Pointrefers to VIH, ViL parameter of Normal GPIO Specifications.

Amlogic Proprietary and Confidential
Copyright © Amlogic. All rights reserved.

Figure 5-19 2S/TDM Timing Diagram, Slave Mode

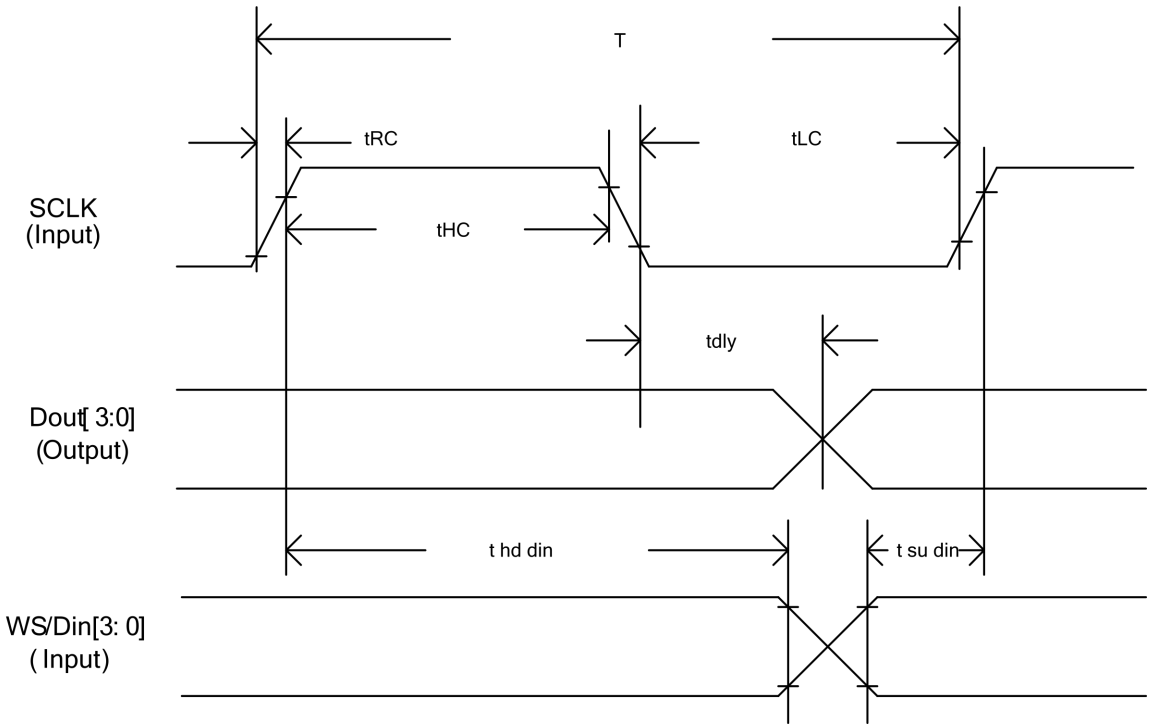

Transmitter (slave mode)					
Symbol	**Parameter**	**Min**	**Typ**	**Max**	**unit**
T(out)	Clock period	40			ns
T(in)	Clock period	10			ns
tHC	High level of SCLK	0.4			T
tLC	Low level of SCLK	0.4			T
tRC	Edge time of SCLK			0.8	ns
tsu in	Setup time of WS/Din	4			ns
thd in	Hold time of WS/ Din	4			ns
tdly	Delay between SCLK and Dout	2	12	15	ns

Note

Measure Pointrefers to VIH, ViL parameter of Normal GPIO Specifications.

Amlogic Proprietary and Confidential
Copyright © Amlogic. All rights reserved.

5.6.8 PDM Timing Specification

Figure 5-20 PDM Timing Diagram

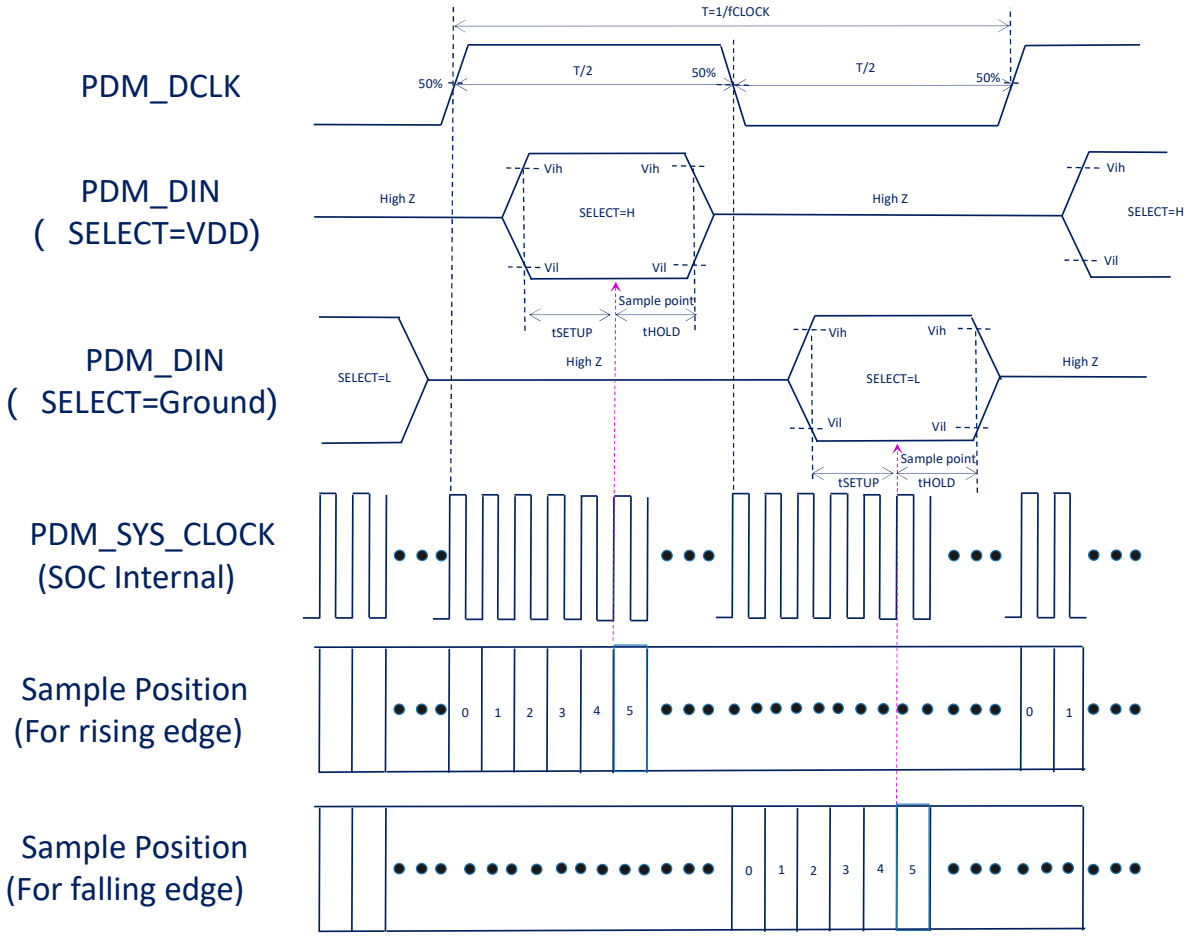

Table 5-24 PDM Timing Specification

Parameter	Symbol	Min.	Typ.	Max.	Units.
PDM clock period	tDCLK	200			ns
PDM clock duty cycle	tHIGH/tLOW	48%		52%	tDCLK
PDM Data setup time	tSETUP	20			ns
PDM Data hold time	tHOLD	20			ns
Sys clock period	tSYSCLK	5	7.5		ns

Note

1. Default PDM_SYS_CLOCK=133MHz.
2. For Sample position, please refer to PDM register PDM_CHAN_CTRL,PDM_CHAN_CTRL1.

Amlogic Proprietary and Confidential
Copyright © Amlogic. All rights reserved.

5.6.9 UART Timing Specification

Figure 5-21 UART Timing Diagram

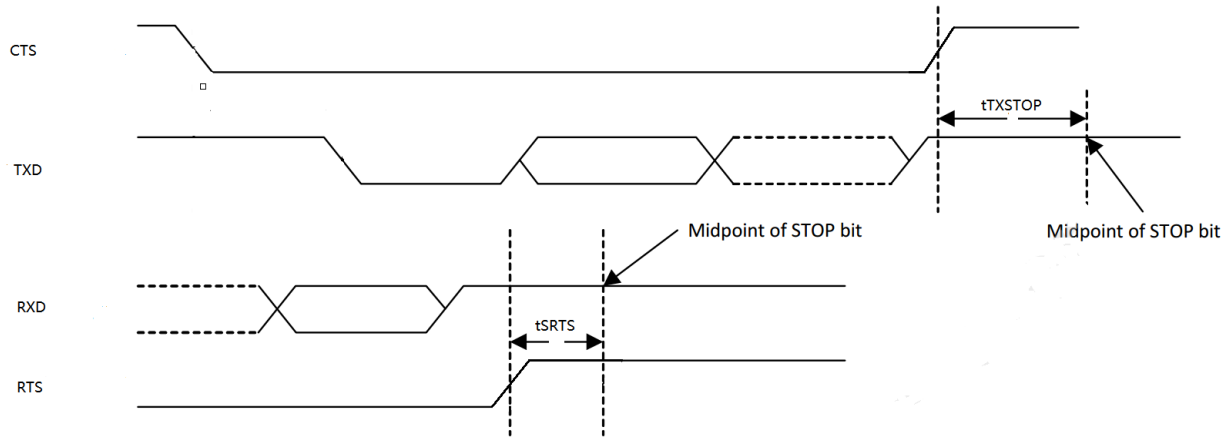

Table 5-25 UART Timing Specification

Parameter	Symbole	Min.	Max.	Units.
Delay time, CTS high before midpoint of stop bit	tTXSTOP	-	0.5	Bit Periods
Delay time, midpoint of stop bit to RTS hgih	tSRTS	-	0.5	Bit Periods

5.7 Recommended Oscillator Electrical Characteristics

The SoC requires the 24MHz oscillator for generating the main clock source.

Symbol	Description	Min.	Typ.	Max.	Unit	Notes
F_o	Nominal Frequency		24		MHz	
$\Delta f/f_o$	Frequency Tolerance	-30		30	ppm	At 25 ℃
		-50		50	ppm	At -20~85 ℃
C_L	Load Capacitance	7.5	12	12.5	pF	
ESR	Equivalent Series Resistance			100	oHm	

Amlogic Proprietary and Confidential
Copyright © Amlogic. All rights reserved.

Note

1. 10ppm Tolerance is preferred if 24MHz XTAL is also driving WIFI module.
2. For user external clock source, please connect input clock output to SYS_OSCIN , let SYS_ OSCOUT floating.
3. The threshold of Xin inverter is around 0.9V (Xin range: -0.45V to +2.1V). Therefore, Following suggestion for input clock.
   - Suggestion 1: Without DC blocking capacitor, use a higher Vpp output TCXO. The high voltage should be higher than 1.35V (VSWING >1.35V, 0V to >1.35V).
   - Suggestion 2: With DC blocking capacitor, re-bias the middle voltage at 0.9V, VSWING >2*0.45V.

5.7.1 Recommended RTC_CLK_IN Electrical Characteristics

Table 5-26 Requirement for RTC_CLK_IN

Symbol	Description	Min.	Typ.	Max.	Unit	Notes
F_o	Nominal Frequency		32.768		KHz	
$\Delta f/f_o$	Frequency Tolerance	-20		20	ppm	At 25 ℃
Parabolic coefficient				-0.04	ppm/℃^{2}	

Note

If RTC_CLK_IN needs to be used for time counting, customers can choose a higher precision clk according to the error range acceptable to the actual application.

5.8 Recommended PDVFS Specification

For the CPU(A53,A73)dynamic voltage and frequency sacling specification is as follows.

freq[MHz]		500	666	1000	1200	1392	1512	1608	1704	1800	1896	2016	2208
Voltage-A73 [mV]	null	820	820	820	820	820	830	850	870	910	940	960	1010
	grp1	820	820	820	820	820	830	850	870	910	940	960	1010
	grp2	800	800	800	800	810	810	830	850	860	890	920	970
	grp3	790	790	790	790	810	810	820	830	850	860	880	920
Voltage-A53 [mV]	null	770	770	770	770	770	810	840	870	910	950	1010	
	grp1	770	770	770	770	770	810	840	870	910	950	1010	
	grp2	760	760	760	760	770	790	800	830	860	900	950	
	grp3	750	750	750	750	770	780	790	810	830	860	920	

Amlogic Proprietary and Confidential
Copyright © Amlogic. All rights reserved.

5.9 Power On Configuration

3 Boot pins are used as power on configuration (POC) pins, to set the booting sequence.

POC setting is latched at the rising edge of reset signal.

3 POC pins are all pull high internal, CPU will try to boot from nand/eMMC first, if fails then try to boot from SD CARD, still fails then try to boot from USB (PC).

External 4.7K ohm pull down resistors can be used to change the POC setting. The resistors should be placed on right location, avoid stubs on high speed signals.

The SoC's power on configuration is listed as following:

Table 5-27 Power On Configuration Pin Table

POC	Boot Pin	Name	Pull low	Pull high
POC_2	GPIOB_2	SPINOR_FIRST	SPI NOR first	Default sequence
POC_4	GPIOB_4	SDCARD_FIRST	SDCARD boot first	Default sequence
POC_5	GPIOB_5	USB_FIRST	USB boot first	Default sequence

Table 5-28 Booting Sequence Diagram

No.	GPIOB_5 POC5	GPIOB_4 POC4	GPIOB_2 POC2	1st	2nd	3rd	4th
1	0	0	0	SD	SPINOR	eMMC	USB
2	0	0	1	SD	eMMC	SPINOR	USB
3	0	1	0	USB	SPINOR	eMMC	SD
4	0	1	1	USB	eMMC	SPINOR	SD
5	1	0	0	SD	SPINOR	eMMC	USB
6	1	0	1	SD	eMMC	SPINOR	USB
7	1	1	0	SPINOR	eMMC	SD	USB
8	1	1	1	eMMC	SPINOR	SD	USB

5.10 Power On Reset

The POR (Power On Reset) monitors VDDIO_AO power voltage and compares it to a threshold Voltage.

POR_OUT pin is low (SOC is reset mode) when VDDIO_AO is below threshold,

Note

1. Place 1nF capacitors on RESET_N Pin.
2. VDDIO_AO power pin is only support 3.3V, not allow to power off in sleep mode.

Amlogic Proprietary and Confidential
Copyright © Amlogic. All rights reserved.

Figure 5-22 POR Wave Diagram

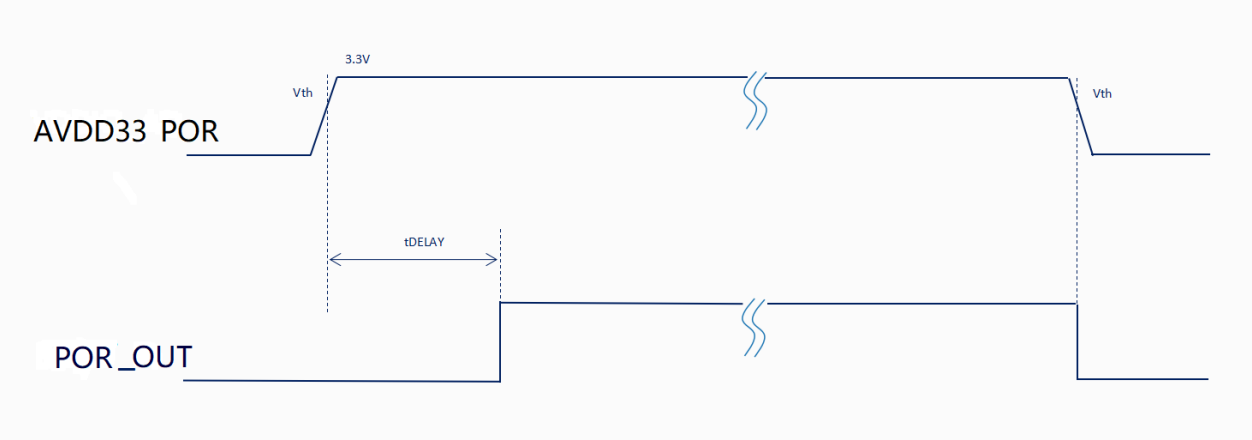

Table 5-29 POR Specifications

Parameter	Symbol	Min.	Typ.	Max.	Unit
Reset threshold for power up	Vth+	-	-	2.9	V
Reset threshold for power down	Vth-	2.5	-	-	V
Reset delay time	tDELAY	109	156	218	ms

5.11 Recommended Power On Sequence

The example of power on sequence is shown in the following figure.

Figure 5-23 Power On Sequence

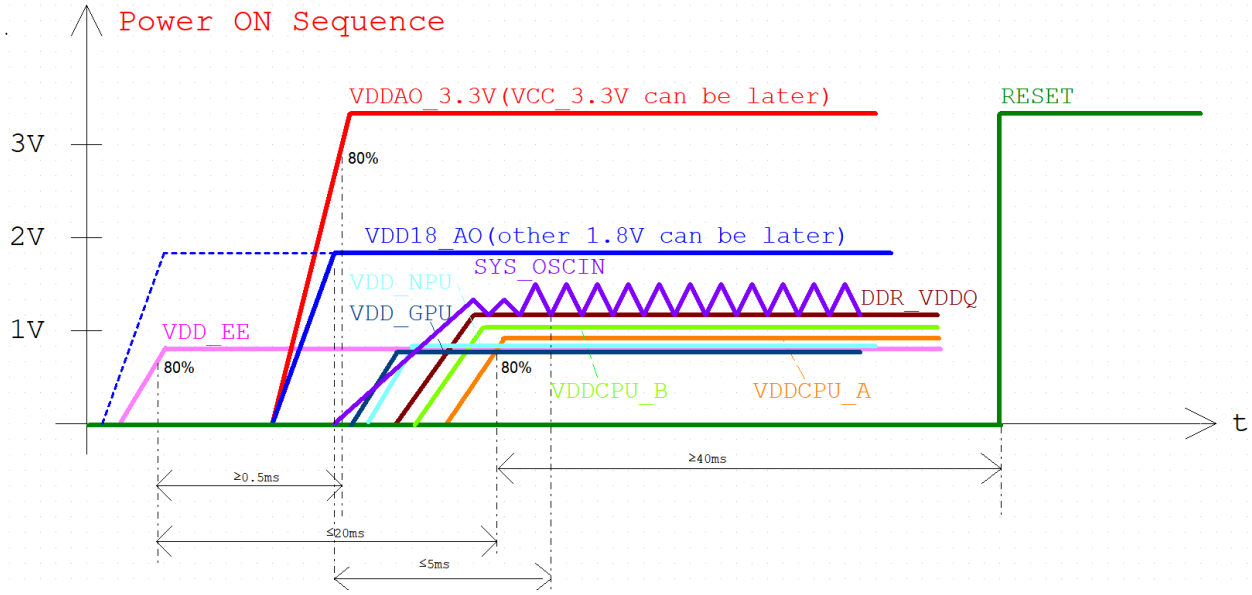

Amlogic Proprietary and Confidential
Copyright © Amlogic. All rights reserved.

Note

1. All test values refer to 80% of typical power voltage.
2. VDDAO_3.3V & VCC_3.3V should ramp up > 0.5ms later than VDD_EE.
3. All power sources should get stable within 20ms (except for DDR_VDDQ and VDD_QLP).
4. No sequence requirement between VDD18_AO and VDD_EE. No sequence requirement between VDDCPU_A & VDDCPU_B & VDD_NPU & VDD_GPU & VDDQ & VDD_QLP & VDD_DDR and other power source.
5. VDDIO_AO18 should ramps up earlier or at the same time with VDDAO_3.3V & VCC3.3V, VDDAO_3.3V & VCC3.3V should never be 2.5V higher than VDD18_AO.
6. In some designs, VDDCPU & VDD_EE are merged to VCC_CORE, the power on sequence should be same as VDD_EE.
7. RESET_n should keep low for at least 30ms after power up (except VDDQ and VDD_QLP).
8. System CLK(SYS_OSCIN pin) should be stable within in 5ms after VDD18_AO is stable.

5.12 Power Consumption

Note

Value listed here is estimated typical max value tested. Enough margin in circuit needs to be reserved.

Symbol	Maximum Current
VDD_DDR	1500
VDD_EE	3000
VDD_GPU	3000
VDD_NPU	3000
VDDCPU_A	4000
VDDCPU_B	2000
VDDQ	1500
VDDQLP	600

Symbol	Typical Current (mA)	Maximum Current (mA)	Note
AVDD_DDR0PLL	12.0		
AVDD_DDR1PLL	12.0		
AVDD08_DP	11.0		
AVDD08_HDMIRX	87.1		
AVDD08_HDMITX	11.1		At 6 Gbps mode
AVDD0V8_CSI	18.0		
AVDD0V8_USB_PCIE	54.0		

Amlogic Proprietary and Confidential
Copyright © Amlogic. All rights reserved.

Symbol	Typical Current (mA)	Maximum Current (mA)	Note
AVDD18_MCLK	4.0		
AVDD18_DDR_DP_PLL	4.7		
AVDD18_PLL	4.7		
AVDD18_SARADC	1.0		
VDD18_AO	3.0		Including VDD18_EFUSE, Max 100mA when Programing EFUSE
AVDD18_USB_PCIE	85.0		
AVDD18_AUDIO	6.6		
AVDD18_CSI	9.0		
AVDD18_ENET	31.0		
AVDD18_HDMIRX_EARCTX	23.5		
AVDD18_HDMITX_EARCRX	22.3		
AVDD18_DP	210.0		
AVDD33_HDMIRX	90.0		Per connected channel
AVDD33_HDMITX	60.0		
AVDD33_POR	0.1		
AVDD33_USB	24.6		
VDDIO			

5.13 Storage and Baking Conditions

The processor is moisture-sensitive device of MSL level 3, defined by IPC/JEDEC J-STD-020. Please follow the storage and backing guidelines.

1. Calculated shelf life in sealed bag: 12 months at <40°C and <90% relative humidity (RH).
2. After bag is opened, devices that will be subjected to reflow solder or other high temperature process must comply with either of the following principles.
   a. Mounted with 168 hours of factory conditions ≤30°C/60% RH
   b. Stored per J-STD-033
3. If the humidity indicator card reads >10%, devices should be baked before mounting.
4. If baking is required, see IPC/JEDEC J-STB-033 for baking process.

Amlogic Proprietary and Confidential
Copyright © Amlogic. All rights reserved.

6 Mechanical Dimensions

The processor comes in a 14.30x16.10 ball matrix FCBGA RoHS package. The mechanical dimensions are shown as the following figures.

Figure 6-1 Dimensions

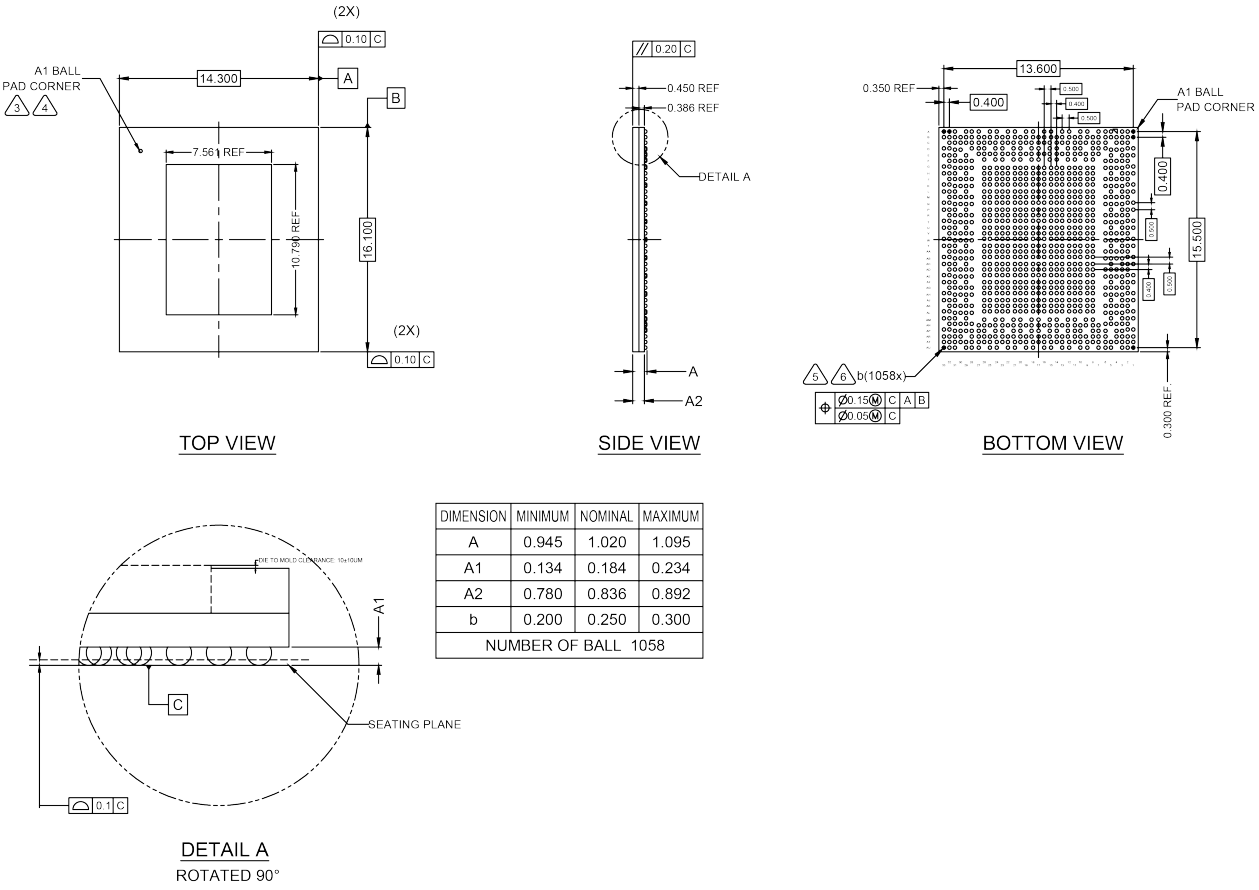

DIMENSION	MINIMUM	NOMINAL	MAXIMUM
A	0.945	1.020	1.095
A1	0.134	0.184	0.234
A2	0.780	0.836	0.892
b	0.200	0.250	0.300
NUMBER OF BALL 1058			

DETAIL A
ROTATED 90°

Amlogic Proprietary and Confidential
Copyright © Amlogic. All rights reserved.

7 System

This chapter describes the system architecture.

7.1 Memory Map

Memory map is listed in the following table.

Domain	REGION (NORMAL)	Start	End
CPU only	ROM_MMU	FFFF8000	FFFFFFFF
	ROM_DFU	FFFF2000	FFFF7FFF
	ROM_MAIN	FFFE0000	FFFF1FFF
	reserved	FFF08000	FFFDFFFF
	gic	FFF00000	FFF07FFF
	reserved	FFE00000	FFEFFFFF
	a53_dbg	FF600000	FFDFFFFF
CAPU	reserved	FF050000	FF5FFFFF
	ge2d	FF040000	FF04FFFF
	vpu	FF000000	FF03FFFF
	a73_dbg	FE800000	FEFFFFFF
	CCI	FE700000	FE7FFFFF
	reserved	FE500000	FE6FFFFF
	reserved	FE480000	FE4FFFFF
	SECTOP	FE440000	FE47FFFF
	mali	FE400000	FE43FFFF
	reserved	FE3C0000	FE3FFFFF
	mipi_isp	FE3B0000	FE3BFFFF
	hdmirx_core	FE3A0000	FE3AFFFF
	hdmirx	FE390000	FE39FFFF
	hdmitx_core	FE380000	FE38FFFF
	ADLA	FE370000	FE37FFFF
	reserved	FE360000	FE36FFFF
	dspb	FE350000	FE35FFFF
	dspa	FE340000	FE34FFFF
	audio	FE330000	FE33FFFF
	dos	FE320000	FE32FFFF
	wave	FE310000	FE31FFFF
	hdmitx	FE300000	FE30FFFF
	reserved	FE0C0000	FE2FFFFF
	reserved	FE0BE000	FE0BFFFF

Amlogic Proprietary and Confidential
Copyright © Amlogic. All rights reserved.

Domain	REGION (NORMAL)	Start	End
	reserved	FE0BC000	FE0BDFFF
	reserved	FE0BA000	FE0BBFFF
	reserved	FE0B8000	FE0B9FFF
	reserved	FE0B6000	FE0B7FFF
	reserved	FE0B4000	FE0B5FFF
	edptx_ctrl1	FE0B2000	FE0B3FFF
	edptx_ctrl0	FE0B0000	FE0B1FFF
	reserved	FE0AE000	FE0AFFFF
	reserved	FE0AC000	FE0ADFFF
	reserved	FE0AA000	FE0ABFFF
	reserved	FE0A8000	FE0A9FFF
	reserved	FE0A6000	FE0A7FFF
	reserved	FE0A4000	FE0A5FFF
	reserved	FE0A2000	FE0A3FFF
	ddr_pll	FE0A0000	FE0A1FFF
	aucpu	FE09E000	FE09FFFF
	aocpu	FE09C000	FE09DFFF
	temp_sensor_hevc	FE09A000	FE09BFFF
	temp_sensor_vpu	FE098000	FE099FFF
	temp_sensor_nna	FE096000	FE097FFF
	temp_sensor_gpu	FE094000	FE095FFF
	axi_sramb	FE092000	FE093FFF
	axi_srama	FE090000	FE091FFF
	CVE	FE08E000	FE08FFFF
	nand_emmc_C	FE08C000	FE08DFFF
	sdio_B	FE08A000	FE08BFFF
	sdio_A	FE088000	FE089FFF
	i2c_m_ao_b	FE086000	FE087FFF
	ir_top	FE084000	FE085FFF
	uart_f	FE082000	FE083FFF
	uart_e	FE080000	FE081FFF
	uart_d	FE07E000	FE07FFFF
	uart_c	FE07C000	FE07DFFF
	uart_b	FE07A000	FE07BFFF
	uart_a	FE078000	FE079FFF
	i2c_m_ao_a	FE076000	FE077FFF

Amlogic Proprietary and Confidential
Copyright © Amlogic. All rights reserved.

Domain	REGION (NORMAL)	Start	End
	mipi_dsi_host a	FE074000	FE075FFF
	mipi_dsi_host b	FE072000	FE073FFF
	i2c_m_f	FE070000	FE071FFF
	i2c_m_e	FE06E000	FE06FFFF
	i2c_m_d	FE06C000	FE06DFFF
	i2c_m_c	FE06A000	FE06BFFF
	i2c_m_b	FE068000	FE069FFF
	i2c_m_a	FE066000	FE067FFF
	i2c_s_a	FE064000	FE065FFF
	usb30_apb	FE062000	FE063FFF
	pwm_ao_cd	FE060000	FE061FFF
	pwm_ao_ab	FE05E000	FE05FFFF
	pwm_ef	FE05C000	FE05DFFF
	pwm_cd	FE05A000	FE05BFFF
	pwm_ab	FE058000	FE059FFF
	spifc	FE056000	FE057FFF
	spicc_2	FE054000	FE055FFF
	spicc_1	FE052000	FE053FFF
	spicc_0	FE050000	FE051FFF
	spicc_5	FE04E000	FE04FFFF
	spicc_4	FE04C000	FE04DFFF
	spicc_3	FE04A000	FE04BFFF
	msr_clk	FE048000	FE049FFF
	aififo	FE046000	FE047FFF
	cec	FE044000	FE045FFF
	RSA	FE042000	FE043FFF
	dewarp	FE040000	FE041FFF
	usb20_phy1	FE03E000	FE03FFFF
	usb20_phy0	FE03C000	FE03DFFF
	usb_comb	FE03A000	FE03BFFF
	Smart Card	FE038000	FE039FFF
	dmc0	FE036000	FE037FFF
	dmc1	FE034000	FE035FFF
	pwm_ao_gh	FE032000	FE033FFF
	pwm_ao_ef	FE030000	FE031FFF
	startup	FE02E000	FE02FFFF

Amlogic Proprietary and Confidential
Copyright © Amlogic. All rights reserved.

Domain	REGION (NORMAL)	Start	End
	pcie_A_ctrl	FE02C000	FE02DFFF
	pcie_apb	FE02A000	FE02BFFF
	eth_phy	FE028000	FE029FFF
	sar_adc	FE026000	FE027FFF
	eth_top	FE024000	FE025FFF
	temp_sensor_a53	FE022000	FE023FFF
	temp_sensor_a73	FE020000	FE021FFF
	hdmi20_aes	FE01E000	FE01FFFF
	reserved	FE01C000	FE01DFFF
	acodec_ctrl	FE01A000	FE01BFFF
	edp_dsi_vx1_dphy	FE018000	FE019FFF
	mipi_dsi_phy1	FE016000	FE017FFF
	mipi_dsi_phy0	FE014000	FE015FFF
	capu	FE012000	FE013FFF
	sys_ctrl	FE010000	FE011FFF
	cpu_ctrl	FE00E000	FE00FFFF
	pwr_ctrl	FE00C000	FE00DFFF
	irq_ctrl	FE00A000	FE00BFFF
	analog_ctrl	FE008000	FE009FFF
	mailbox	FE006000	FE007FFF
	pad_ctrl	FE004000	FE005FFF
	reset_ctrl	FE002000	FE003FFF
	clk_ctrl	FE000000	FE001FFF
	reserved	FDF00000	FDFFFFFF
	usb0(usb3_drd)	FDE00000	FDEFFFFF
	usb1(usb2_drd)	FDD00000	FDDFFFFF
	reserved	FDC10000	FDCFFFFF
	eth	FDC00000	FDC0FFFF
	reserved	FDB00000	FDBFFFFF
	reserved	FD500000	FDAFFFFF
	NIC5_GPV	FD400000	FD4FFFFF
	NIC4_GPV	FD300000	FD3FFFFF
	NIC3_GPV	FD200000	FD2FFFFF
	NIC2_GPV	FD100000	FD1FFFFF
	NIC1_GPV	FD000000	FD0FFFFF
	ddr_top_0	FC000000	FCFFFFFF

Amlogic Proprietary and Confidential
Copyright © Amlogic. All rights reserved.

Domain	REGION (NORMAL)	Start	End
	ddr_top_1	FB000000	FBFFFFFF
	reserved	FA040000	FAFFFFFF
DATA	pcie b	F8000000	F9FFFFFF
	reserved	F7180000	F7FFFFFF
	axi sramb	F7080000	F717FFFF
	axi srama	F7000000	F707FFFF
	pcie a	F5000000	F6FFFFFF
	flash	F1000000	F4FFFFFF

7.2 Power Domain

The following figure shows the power domain of the SoC.

Figure 7-1 Power Domain

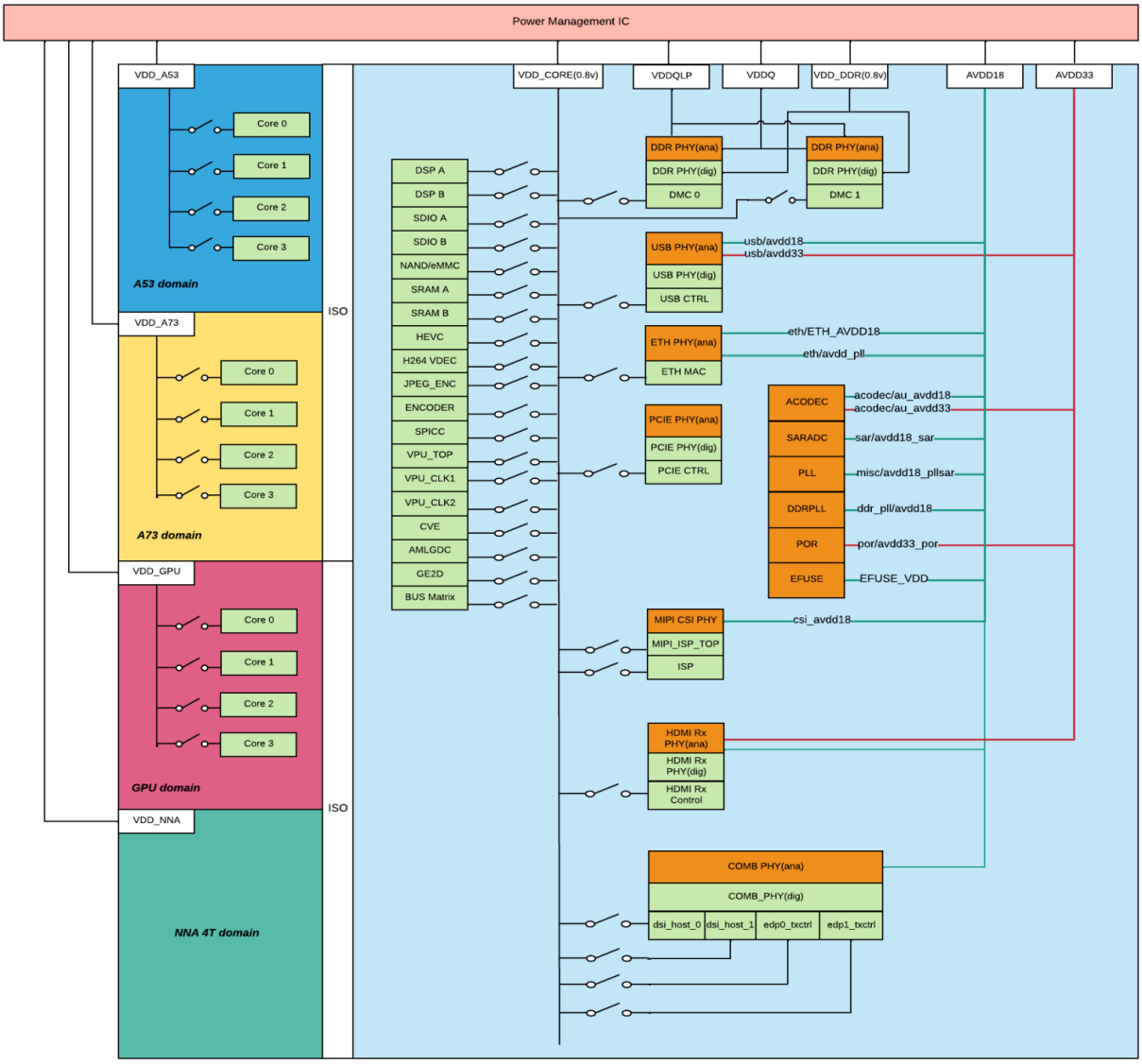

Amlogic Proprietary and Confidential
Copyright © Amlogic. All rights reserved.

The power domain ID is matched to the corresponding register bit, it can be used to set the registers for power switching.

Domain Name	ID
PM_A53_PWR	0
PM_A53_CORE0	1
PM_A53_CORE1	2
PM_A53_CORE2	3
PM_A53_CORE3	4
PM_A73_PWR	5
PM_A73_CORE0	6
PM_A73_CORE1	7
PM_A73_CORE2	8
PM_A73_CORE3	9
PM_DSPA	10
PM_DSPB	11
PM_DOS_HCODEC	24
PM_DOS_HEVC	25
PM_DOS_VDEC	26
PM_DOS_WAVE	27
PM_VPU_HDMI	28
PM_USB_COMB	30
PM_PCIE	31
PM_GE2D	32
PM_HDMIRX	35
PM_VI_CLK1	36
PM_VI_CLK2	37
PM_ETH	39
PM_ISP	41
PM_MIPI_ISP	42
PM_GDC	43
PM_DEWARP	44

Amlogic Proprietary and Confidential
Copyright © Amlogic. All rights reserved.

Domain Name	ID
PM_SDEMMC_A	45
PM_SDEMMC_B	46
PM_SDEMMC_C	47
PM_MALI_SC0	48
PM_MALI_SC1	49
PM_MALI_SC2	50
PM_MALI_SC3	51
PM_MALI_TOP	52
PM_NNA_CORE0	56
PM_NNA_CORE1	57
PM_NNA_CORE2	58
PM_NNA_CORE3	59
PM_NNA_TOP	60
PM_DDR0	62
PM_DDR1	63
PM_DMC0	64
PM_DMC1	65
PM_NOC	66
PM_NIC2	67
PM_NIC3	68
PM_CC1	69
PM_MIPI_DSI0	70
PM_SPICC0	71
PM_SPICC1	72
PM_SPICC2	73
PM_SPICC3	74
PM_SPICC4	75
PM_SPICC5	76
PM_EDP0	77
PM_EDP1	78
PM_MIPI_DSI1	79

Amlogic Proprietary and Confidential
Copyright © Amlogic. All rights reserved.

7.2.1 A73 & A53 Power Domain

The A73/A53 domain is 2-levels power domain. The A73/A53 domain itself consists of 4 CPU cores, a L2 cache controller and a SCU. The A73/A53 CPU boots with the SCU/L2 and each one of cores powered. Each CPU core can be enabled and disabled independently using the control bits described below. The diagram below illustrates the transition to each state.

Figure 7-2 Power on & Power off process

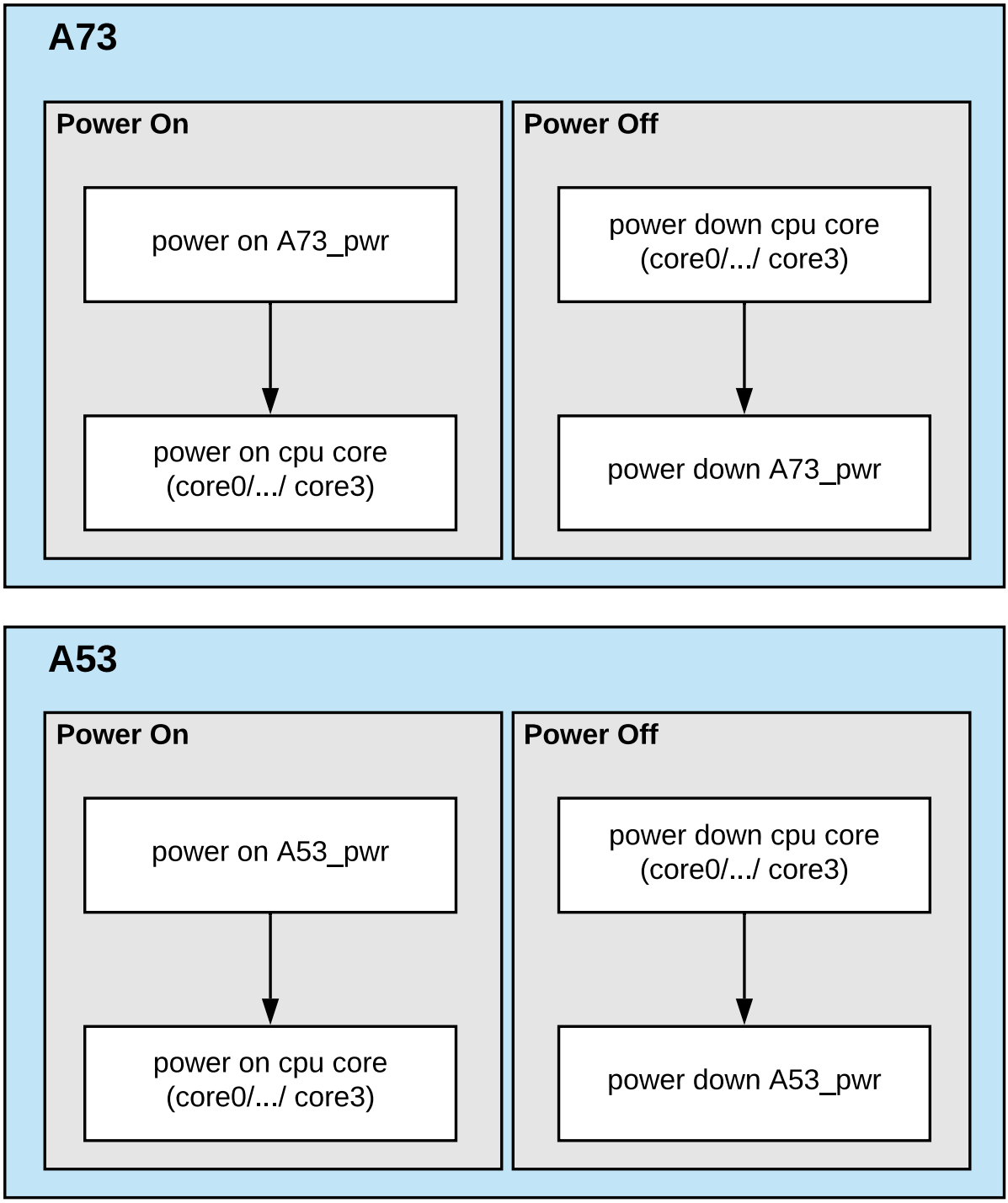

Amlogic Proprietary and Confidential
Copyright © Amlogic. All rights reserved.

7.2.2 General Power Domain

The power domains except A73 and A53 power domain are General Power Domains, they are 1-level power domain.

Power domains can be shut down by software way or hardware way.

7.2.3 Power Switch Sequence

Power switch sequences include several steps of reset, isolation, power switch etc, functions of each step are listed below:

- Reset: Reset or de-reset the whole domain.
- Isolation: Isolate the power domain from exporting unknown state to powered-on domains. Enable or Disable isolation.
- Power switch: Power on/off memories and logics.

Typical Power On Stages

A typical power on process is described below:

1. Keep the reset status of the whole domain;
2. Power on logics with 10us~100us of time delay;
3. Power on memories, with 10us~100us of time delay;
4. Disable isolations;
5. De-assert reset.

In some scenarios, we need to enable the gated-off clocks when domain is powered on. This action is recommended to be done between step 4 and step 5.

Typical Power Off Stages

A typical power off process is described below:

1. Keep the reset status of the whole domain;
2. Enable isolations;
3. Power off memories with 5us~10us of time delay;
4. Power off logics with 5us~10us of time delay;

In some scenarios, we need to gate off clocks when domain is powered down. This action is recommended to be done between step 1 step 2.

We can perform the power switch sequence by software way or hardware way. But not all power domains support hardware power switching.

The following power domains support hardware power switching:

- PM_A73_PWR
- PM_A73_CORE0
- PM_A73_CORE1
- PM_A73_CORE2
- PM_A73_CORE3
- PM_A53_PWR
- PM_A53_CORE0
- PM_A53_CORE1
- PM_A53_CORE2
- PM_A53_CORE3
- PM_DSP_A

Amlogic Proprietary and Confidential
Copyright © Amlogic. All rights reserved.

- PM_DSP_B

Other power domains don’t support hardware power switching.

7.2.4 Power Control

Depends on applications, the power switch sequence can be performed by software power control or by hardware power control.

For the following scenarios, hardware power control is recommended:

- All processors (DSP and CPU) are powered-off, need IRQ awake one of them;
- No processor is powered-on, but still need to power on the domains other than CPU/DSP domains.
- PM_CPU_TOP
- PM_CPU_CORE0
- PM_CPU_CORE1
- PM_DSP_A
- PM_SP_TOP

For other power domains that don’t support hardware power switching, please use software power control scheme.

7.2.4.1 Hardware Power Control

The SOC integrates a hardware logic module to control power switching, shown in below diagram.

- If PWR_CTRL FSM is disabled, the power switching is controlled by register configuration;
- If PWR_CTRL FSM is enabled, the power control will be controlled by PWR_CTRL FSM.

Figure 7-3 Power Control Mux

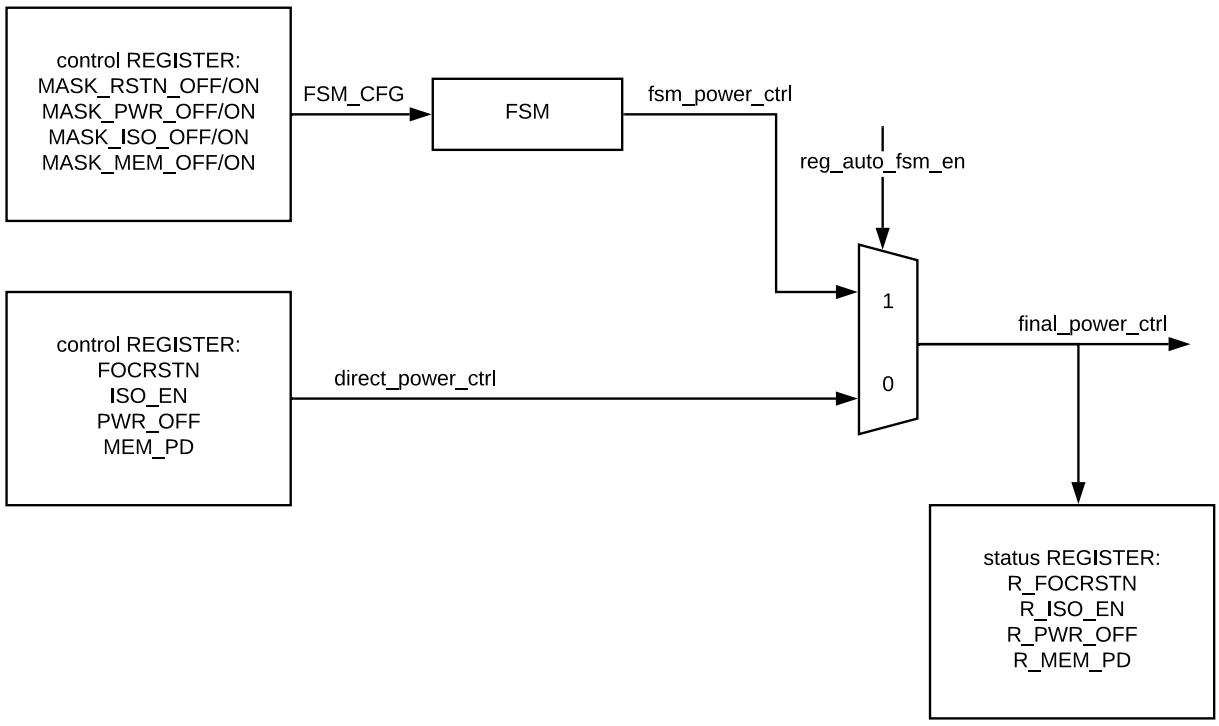

Amlogic Proprietary and Confidential
Copyright © Amlogic. All rights reserved.

PWR_CTRL FSM

The diagram of state machine is illustrated at below.

Every step of power switch is implemented in FSM.

Every step has delay which can be adjusted by registers.

IDLE to OFF_WAIT is controlled by reg_start_pwr_off register. It's the start of domain power-off.

WAIT_IRQ to ON_S0 is controlled by IRQ (3 selections from all the SOC interrupts).

Note

Only one FSM is integrated in power control, if FSM starts, all the modules' power switching will be done at the same time.

Figure 7-4 PWR_CTRL FSM Diagram

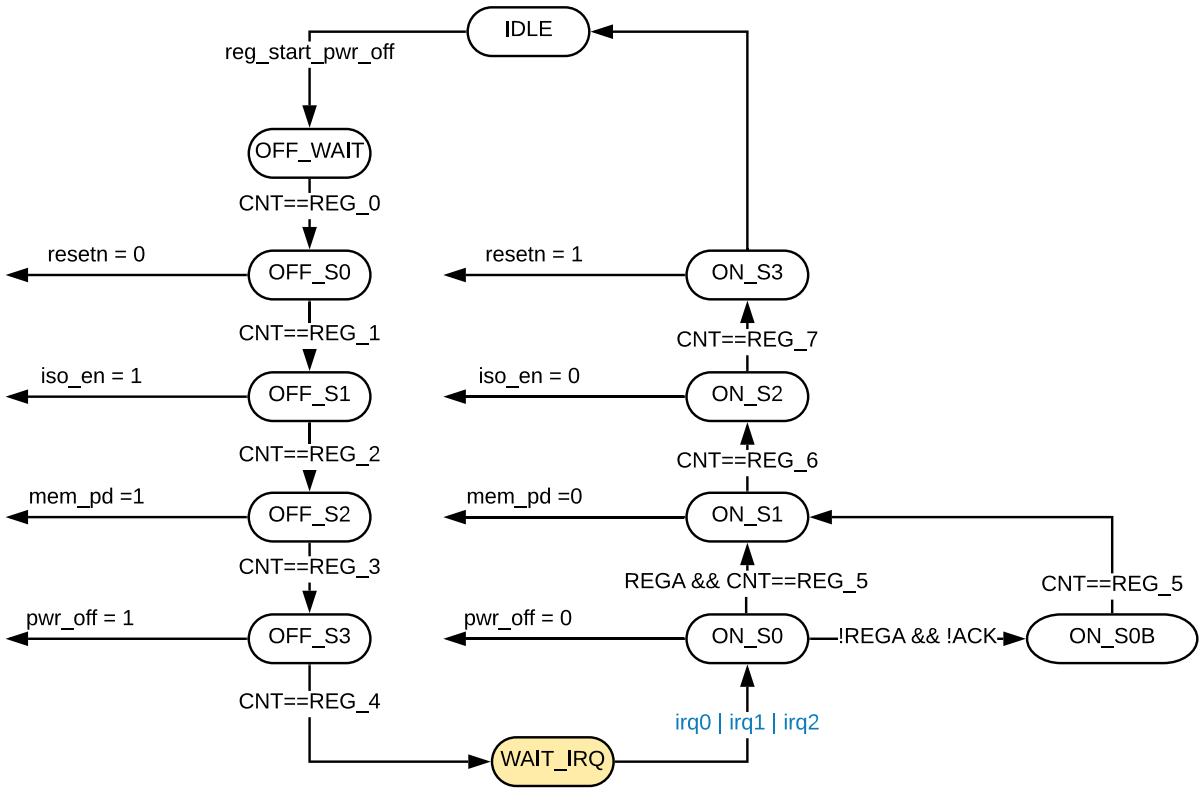

Configuration

Mask registers are used to configure the power switching. They can be overlaid with the current power status based on software registers settings.

When shut off/on one domain by hardware, please configure the steps of power switching sequences in advance. For example, enable reset when PWR_CTRL FSM in OFF_S0, enable iso_en when PWR_CTRL FSM in OFF_S1. FSM will perform the steps following the script. We should build the state transition script before start the state machine. Every power domain has their mask configuration registers. Including:

1. Reset mask register,

Amlogic Proprietary and Confidential
Copyright © Amlogic. All rights reserved.

2. Isolation mask register,
3. Memory pd off mask register,
4. Memory pd on mask register,
5. Power switch mask register.

Switching from Hardware Control to Software Control

Hardware power control is overlaid on the original power state, software power control is not, so if you need to switch to software way when PWR_CTRL FSM is enabled, we should save the previous power state of hardware switching, otherwise the state may be lost and cause power domain switching to the wrong power state unintentionally.

When switching hardware power control to software power control, perform the following:

1. Save power switch register;
2. Save isolation register;
3. Save reset control register.

Transition Delay Setting

PWR_CTRL FSM supports delay configurations between each step. Users can adjust the delay of each step. The delay unit can also be set by register.

3 delay units are supported:

- 1 us
- 10 us
- 100 us

Supported transition delay configurations are listed below:

- OFF_WAIT to OFF_S0: Delay between assert power off and assert reset;
- OFF_S0 to OFF_S1: Delay between assert reset and enable isolation;
- OFF_S1 to OFF_S2: Delay between enable isolation and memory power down;
- OFF_S2 to OFF_S3: Delay between memory power down and enable power switch;
- OFF_S3 to WAIT_IRQ: Delay between power switch and power-off done;
- ON_S0 to ON_S0b: Delay between power on logics and power ack (power ack check is enabled);
- ON_S0b to ON_S1: Delay between power ack and power on memory(power ack check is enabled);
- ON_S0 to ON_S1: Delay between power on logics and power on memory(power ack check is not enabled);
- ON_S1 to ON_S2: Delay between power on memory and disable isolation;
- ON_S2 to ON_S3: Delay between disable isolation and de-assert reset.

Power on IRQ Setting

PWR_CTRL FSM supports all SOC IRQ sources to awake sleep power domains. Any SOC IRQ can awake power domains.

Supports GIC wake interrupts. That means all the interrupts routed to GIC can be used as the awake interrupt.

7.2.4.2 Software Power Control

The processor can perform the power switch sequences by registers.

Below is example code for power switching.

```
void power_switch_to_domains(PM_E domain, uint32_t pwr_ctrl)
{
```


Amlogic Proprietary and Confidential
Copyright © Amlogic. All rights reserved.

```
    if(pwr_ctrl == PWR_ON) {
        st_printf("[PWR]: Power on %s domain.\n", get_domain_name(domain));

        // assert reset
        do_reset(domain, PWR_OFF);

        // Powerup Power Domain
        do_power_switch(domain, PWR_ON);

        delay_us(50);

        // Powerup memories
        do_power_memory(domain, PWR_ON);

        delay_us(100);

        // remove isolations
        do_iso_en(domain, PWR_ON);

// deassert reset
        do_reset(domain, PWR_ON);
    } else {
        st_printf("[PWR]: power off %s domain.\n", get_domain_name(domain));

        // reset
        do_reset(domain, PWR_OFF);

        // add isolation to domain
        do_iso_en(domain, PWR_OFF);

        // Power down memories
        do_power_memory(domain, PWR_OFF);
        delay_us(5);
        // Power off  domain
        do_power_switch(domain, PWR_OFF);
        delay_us(10);
    }
}
```

7.2.5 Register Description

Register Address

- PWRCTRL_PWR_ACK0 0xfe00c000
- PWRCTRL_PWR_ACK1 0xfe00c004
- PWRCTRL_PWR_OFF0 0xfe00c010
- PWRCTRL_PWR_OFF1 0xfe00c014
- PWRCTRL_ISO_EN0 0xfe00c020
- PWRCTRL_ISO_EN1 0xfe00c024
- PWRCTRL_FOCRST0 0xfe00c030
- PWRCTRL_FOCRST1 0xfe00c034
- PWRCTRL_MEM_PD0 0xfe00c040
- PWRCTRL_MEM_PD1 0xfe00c044
- PWRCTRL_MEM_PD2 0xfe00c048
- PWRCTRL_MEM_PD3 0xfe00c04c
- PWRCTRL_MEM_PD4 0xfe00c050
- PWRCTRL_MEM_PD5 0xfe00c054
- PWRCTRL_MEM_PD6 0xfe00c058
- PWRCTRL_MEM_PD7 0xfe00c05c
- PWRCTRL_MEM_PD8 0xfe00c060

Amlogic Proprietary and Confidential
Copyright © Amlogic. All rights reserved.

- PWRCTRL_MEM_PD9 0xfe00c064
- PWRCTRL_MEM_PD10 0xfe00c068
- PWRCTRL_MEM_PD11 0xfe00c06c
- PWRCTRL_MEM_PD12 0xfe00c070
- PWRCTRL_MEM_PD13 0xfe00c074
- PWRCTRL_MEM_PD14 0xfe00c078
- PWRCTRL_MEM_PD15 0xfe00c07c
- PWRCTRL_MEM_PD16 0xfe00c080
- PWRCTRL_MEM_PD17 0xfe00c084
- PWRCTRL_MEM_PD18 0xfe00c088
- PWRCTRL_MEM_PD19 0xfe00c08c
- PWRCTRL_MEM_PD20 0xfe00c090
- PWRCTRL_MEM_PD21 0xfe00c094
- PWRCTRL_MEM_PD22 0xfe00c098
- PWRCTRL_MEM_PD23 0xfe00c09c
- PWRCTRL_MEM_PD24 0xfe00c0a0
- PWRCTRL_MEM_PD25 0xfe00c0a4
- PWRCTRL_IRQ_EN 0xfe00c0c0
- PWRCTRL_IRQ_STS 0xfe00c0c4
- PWRCTRL_CPU0_AUTO_OFF_CTRL0 0xfe00c100
- PWRCTRL_CPU0_AUTO_OFF_CTRL1 0xfe00c104
- PWRCTRL_CPU0_AUTO_OFF_CTRL2 0xfe00c108
- PWRCTRL_CPU0_AUTO_OFF_CTRL3 0xfe00c10c
- PWRCTRL_CPU0_AUTO_OFF_CTRL4 0xfe00c110
- PWRCTRL_CPU0_AUTO_OFF_CTRL5 0xfe00c114
- PWRCTRL_CPU0_TIMER_TH_01 0xfe00c120
- PWRCTRL_CPU0_TIMER_TH_23 0xfe00c124
- PWRCTRL_CPU0_TIMER_TH_45 0xfe00c128
- PWRCTRL_CPU0_TIMER_TH_67 0xfe00c12c
- PWRCTRL_CPU0_TIMER_TH_89 0xfe00c130
- PWRCTRL_CPU0_IRQ_MASK0 0xfe00c140
- PWRCTRL_CPU0_IRQ_MASK1 0xfe00c144
- PWRCTRL_CPU0_IRQ_MASK2 0xfe00c148
- PWRCTRL_CPU0_IRQ_MASK3 0xfe00c14c
- PWRCTRL_CPU0_IRQ_MASK4 0xfe00c150
- PWRCTRL_CPU0_IRQ_MASK5 0xfe00c154
- PWRCTRL_CPU0_IRQ_MASK6 0xfe00c158
- PWRCTRL_CPU0_IRQ_MASK7 0xfe00c15c
- PWRCTRL_CPU0_IRQ_MASK8 0xfe00c160
- PWRCTRL_CPU0_IRQ_MASK9 0xfe00c164
- PWRCTRL_CPU0_IRQ_MASK10 0xfe00c168
- PWRCTRL_CPU0_IRQ_MASK11 0xfe00c16c
- PWRCTRL_CPU0_IRQ_MASK12 0xfe00c170
- PWRCTRL_CPU0_IRQ_MASK13 0xfe00c174

Amlogic Proprietary and Confidential
Copyright © Amlogic. All rights reserved.

- PWRCTRL_CPU0_IRQ_MASK14 0xfe00c178
- PWRCTRL_CPU0_IRQ_MASK15 0xfe00c17c
- PWRCTRL_CPU0_MEMPD_INIT_SET 0xfe00c180
- PWRCTRL_CPU0_MEMPD_OFF_SET 0xfe00c184
- PWRCTRL_CPU0_MEMPD_ON_A_SET 0xfe00c188
- PWRCTRL_CPU0_MEMPD_ON_B_SET 0xfe00c18c
- PWRCTRL_CPU0_MEMPD_ON_C_SET 0xfe00c190
- PWRCTRL_CPU0_MEMPD_ON_D_SET 0xfe00c194
- PWRCTRL_CPU0_MEMPD_STS 0xfe00c198
- PWRCTRL_CPU0_FSM_STS0 0xfe00c19c
- PWRCTRL_CPU0_FSM_STS1 0xfe00c1a0
- PWRCTRL_CPU0_FSM_STS2 0xfe00c1a4
- PWRCTRL_CPU0_FSM_START_OFF 0xfe00c1b4
- PWRCTRL_CPU0_FSM_START_ON 0xfe00c1b8
- PWRCTRL_CPU0_FSM_JUMP 0xfe00c1bc
- PWRCTRL_CPU1_AUTO_OFF_CTRL0 0xfe00c1c0
- PWRCTRL_CPU1_AUTO_OFF_CTRL1 0xfe00c1c4
- PWRCTRL_CPU1_AUTO_OFF_CTRL2 0xfe00c1c8
- PWRCTRL_CPU1_AUTO_OFF_CTRL3 0xfe00c1cc
- PWRCTRL_CPU1_AUTO_OFF_CTRL4 0xfe00c1d0
- PWRCTRL_CPU1_AUTO_OFF_CTRL5 0xfe00c1d4
- PWRCTRL_CPU1_TIMER_TH_01 0xfe00c1e0
- PWRCTRL_CPU1_TIMER_TH_23 0xfe00c1e4
- PWRCTRL_CPU1_TIMER_TH_45 0xfe00c1e8
- PWRCTRL_CPU1_TIMER_TH_67 0xfe00c1ec
- PWRCTRL_CPU1_TIMER_TH_89 0xfe00c1f0
- PWRCTRL_CPU1_IRQ_MASK0 0xfe00c200
- PWRCTRL_CPU1_IRQ_MASK1 0xfe00c204
- PWRCTRL_CPU1_IRQ_MASK2 0xfe00c208
- PWRCTRL_CPU1_IRQ_MASK3 0xfe00c20c
- PWRCTRL_CPU1_IRQ_MASK4 0xfe00c210
- PWRCTRL_CPU1_IRQ_MASK5 0xfe00c214
- PWRCTRL_CPU1_IRQ_MASK6 0xfe00c218
- PWRCTRL_CPU1_IRQ_MASK7 0xfe00c21c
- PWRCTRL_CPU1_IRQ_MASK8 0xfe00c220
- PWRCTRL_CPU1_IRQ_MASK9 0xfe00c224
- PWRCTRL_CPU1_IRQ_MASK10 0xfe00c228
- PWRCTRL_CPU1_IRQ_MASK11 0xfe00c22c
- PWRCTRL_CPU1_IRQ_MASK12 0xfe00c230
- PWRCTRL_CPU1_IRQ_MASK13 0xfe00c234
- PWRCTRL_CPU1_IRQ_MASK14 0xfe00c238
- PWRCTRL_CPU1_IRQ_MASK15 0xfe00c23c
- PWRCTRL_CPU1_MEMPD_INIT_SET 0xfe00c240
- PWRCTRL_CPU1_MEMPD_OFF_SET 0xfe00c244

Amlogic Proprietary and Confidential
Copyright © Amlogic. All rights reserved.

- PWRCTRL_CPU1_MEMPD_ON_A_SET 0xfe00c248
- PWRCTRL_CPU1_MEMPD_ON_B_SET 0xfe00c24c
- PWRCTRL_CPU1_MEMPD_ON_C_SET 0xfe00c250
- PWRCTRL_CPU1_MEMPD_ON_D_SET 0xfe00c254
- PWRCTRL_CPU1_MEMPD_STS 0xfe00c258
- PWRCTRL_CPU1_FSM_STS0 0xfe00c25c
- PWRCTRL_CPU1_FSM_STS1 0xfe00c260
- PWRCTRL_CPU1_FSM_STS2 0xfe00c264
- PWRCTRL_CPU1_FSM_START_OFF 0xfe00c274
- PWRCTRL_CPU1_FSM_START_ON 0xfe00c278
- PWRCTRL_CPU1_FSM_JUMP 0xfe00c27c
- PWRCTRL_CPU2_AUTO_OFF_CTRL0 0xfe00c280
- PWRCTRL_CPU2_AUTO_OFF_CTRL1 0xfe00c284
- PWRCTRL_CPU2_AUTO_OFF_CTRL2 0xfe00c288
- PWRCTRL_CPU2_AUTO_OFF_CTRL3 0xfe00c28c
- PWRCTRL_CPU2_AUTO_OFF_CTRL4 0xfe00c290
- PWRCTRL_CPU2_AUTO_OFF_CTRL5 0xfe00c294
- PWRCTRL_CPU2_TIMER_TH_01 0xfe00c2a0
- PWRCTRL_CPU2_TIMER_TH_23 0xfe00c2a4
- PWRCTRL_CPU2_TIMER_TH_45 0xfe00c2a8
- PWRCTRL_CPU2_TIMER_TH_67 0xfe00c2ac
- PWRCTRL_CPU2_TIMER_TH_89 0xfe00c2b0
- PWRCTRL_CPU2_IRQ_MASK0 0xfe00c2c0
- PWRCTRL_CPU2_IRQ_MASK1 0xfe00c2c4
- PWRCTRL_CPU2_IRQ_MASK2 0xfe00c2c8
- PWRCTRL_CPU2_IRQ_MASK3 0xfe00c2cc
- PWRCTRL_CPU2_IRQ_MASK4 0xfe00c2d0
- PWRCTRL_CPU2_IRQ_MASK5 0xfe00c2d4
- PWRCTRL_CPU2_IRQ_MASK6 0xfe00c2d8
- PWRCTRL_CPU2_IRQ_MASK7 0xfe00c2dc
- PWRCTRL_CPU2_IRQ_MASK8 0xfe00c2e0
- PWRCTRL_CPU2_IRQ_MASK9 0xfe00c2e4
- PWRCTRL_CPU2_IRQ_MASK10 0xfe00c2e8
- PWRCTRL_CPU2_IRQ_MASK11 0xfe00c2ec
- PWRCTRL_CPU2_IRQ_MASK12 0xfe00c2f0
- PWRCTRL_CPU2_IRQ_MASK13 0xfe00c2f4
- PWRCTRL_CPU2_IRQ_MASK14 0xfe00c2f8
- PWRCTRL_CPU2_IRQ_MASK15 0xfe00c2fc
- PWRCTRL_CPU2_MEMPD_INIT_SET 0xfe00c300
- PWRCTRL_CPU2_MEMPD_OFF_SET 0xfe00c304
- PWRCTRL_CPU2_MEMPD_ON_A_SET 0xfe00c308
- PWRCTRL_CPU2_MEMPD_ON_B_SET 0xfe00c30c
- PWRCTRL_CPU2_MEMPD_ON_C_SET 0xfe00c310
- PWRCTRL_CPU2_MEMPD_ON_D_SET 0xfe00c314

Amlogic Proprietary and Confidential
Copyright © Amlogic. All rights reserved.

- PWRCTRL_CPU2_MEMPD_STS 0xfe00c318
- PWRCTRL_CPU2_FSM_STS0 0xfe00c31c
- PWRCTRL_CPU2_FSM_STS1 0xfe00c320
- PWRCTRL_CPU2_FSM_STS2 0xfe00c324
- PWRCTRL_CPU2_FSM_START_OFF 0xfe00c334
- PWRCTRL_CPU2_FSM_START_ON 0xfe00c338
- PWRCTRL_CPU2_FSM_JUMP 0xfe00c33c
- PWRCTRL_CPU3_AUTO_OFF_CTRL0 0xfe00c340
- PWRCTRL_CPU3_AUTO_OFF_CTRL1 0xfe00c344
- PWRCTRL_CPU3_AUTO_OFF_CTRL2 0xfe00c348
- PWRCTRL_CPU3_AUTO_OFF_CTRL3 0xfe00c34c
- PWRCTRL_CPU3_AUTO_OFF_CTRL4 0xfe00c350
- PWRCTRL_CPU3_AUTO_OFF_CTRL5 0xfe00c354
- PWRCTRL_CPU3_TIMER_TH_01 0xfe00c360
- PWRCTRL_CPU3_TIMER_TH_23 0xfe00c364
- PWRCTRL_CPU3_TIMER_TH_45 0xfe00c368
- PWRCTRL_CPU3_TIMER_TH_67 0xfe00c36c
- PWRCTRL_CPU3_TIMER_TH_89 0xfe00c370
- PWRCTRL_CPU3_IRQ_MASK0 0xfe00c380
- PWRCTRL_CPU3_IRQ_MASK1 0xfe00c384
- PWRCTRL_CPU3_IRQ_MASK2 0xfe00c388
- PWRCTRL_CPU3_IRQ_MASK3 0xfe00c38c
- PWRCTRL_CPU3_IRQ_MASK4 0xfe00c390
- PWRCTRL_CPU3_IRQ_MASK5 0xfe00c394
- PWRCTRL_CPU3_IRQ_MASK6 0xfe00c398
- PWRCTRL_CPU3_IRQ_MASK7 0xfe00c39c
- PWRCTRL_CPU3_IRQ_MASK8 0xfe00c3a0
- PWRCTRL_CPU3_IRQ_MASK9 0xfe00c3a4
- PWRCTRL_CPU3_IRQ_MASK10 0xfe00c3a8
- PWRCTRL_CPU3_IRQ_MASK11 0xfe00c3ac
- PWRCTRL_CPU3_IRQ_MASK12 0xfe00c3b0
- PWRCTRL_CPU3_IRQ_MASK13 0xfe00c3b4
- PWRCTRL_CPU3_IRQ_MASK14 0xfe00c3b8
- PWRCTRL_CPU3_IRQ_MASK15 0xfe00c3bc
- PWRCTRL_CPU3_MEMPD_INIT_SET 0xfe00c3c0
- PWRCTRL_CPU3_MEMPD_OFF_SET 0xfe00c3c4
- PWRCTRL_CPU3_MEMPD_ON_A_SET 0xfe00c3c8
- PWRCTRL_CPU3_MEMPD_ON_B_SET 0xfe00c3cc
- PWRCTRL_CPU3_MEMPD_ON_C_SET 0xfe00c3d0
- PWRCTRL_CPU3_MEMPD_ON_D_SET 0xfe00c3d4
- PWRCTRL_CPU3_MEMPD_STS 0xfe00c3d8
- PWRCTRL_CPU3_FSM_STS0 0xfe00c3dc
- PWRCTRL_CPU3_FSM_STS1 0xfe00c3e0
- PWRCTRL_CPU3_FSM_STS2 0xfe00c3e4

Amlogic Proprietary and Confidential
Copyright © Amlogic. All rights reserved.

- PWRCTRL_CPU3_FSM_START_OFF 0xfe00c3f4
- PWRCTRL_CPU3_FSM_START_ON 0xfe00c3f8
- PWRCTRL_CPU3_FSM_JUMP 0xfe00c3fc
- PWRCTRL_CPUTOP_AUTO_OFF_CTRL0 0xfe00c400
- PWRCTRL_CPUTOP_AUTO_OFF_CTRL1 0xfe00c404
- PWRCTRL_CPUTOP_AUTO_OFF_CTRL2 0xfe00c408
- PWRCTRL_CPUTOP_AUTO_OFF_CTRL3 0xfe00c40c
- PWRCTRL_CPUTOP_AUTO_OFF_CTRL4 0xfe00c410
- PWRCTRL_CPUTOP_AUTO_OFF_CTRL5 0xfe00c414
- PWRCTRL_CPUTOP_TIMER_TH_01 0xfe00c420
- PWRCTRL_CPUTOP_TIMER_TH_23 0xfe00c424
- PWRCTRL_CPUTOP_TIMER_TH_45 0xfe00c428
- PWRCTRL_CPUTOP_TIMER_TH_67 0xfe00c42c
- PWRCTRL_CPUTOP_TIMER_TH_89 0xfe00c430
- PWRCTRL_CPUTOP_IRQ_MASK0 0xfe00c440
- PWRCTRL_CPUTOP_IRQ_MASK1 0xfe00c444
- PWRCTRL_CPUTOP_IRQ_MASK2 0xfe00c448
- PWRCTRL_CPUTOP_IRQ_MASK3 0xfe00c44c
- PWRCTRL_CPUTOP_IRQ_MASK4 0xfe00c450
- PWRCTRL_CPUTOP_IRQ_MASK5 0xfe00c454
- PWRCTRL_CPUTOP_IRQ_MASK6 0xfe00c458
- PWRCTRL_CPUTOP_IRQ_MASK7 0xfe00c45c
- PWRCTRL_CPUTOP_IRQ_MASK8 0xfe00c460
- PWRCTRL_CPUTOP_IRQ_MASK9 0xfe00c464
- PWRCTRL_CPUTOP_IRQ_MASK10 0xfe00c468
- PWRCTRL_CPUTOP_IRQ_MASK11 0xfe00c46c
- PWRCTRL_CPUTOP_IRQ_MASK12 0xfe00c470
- PWRCTRL_CPUTOP_IRQ_MASK13 0xfe00c474
- PWRCTRL_CPUTOP_IRQ_MASK14 0xfe00c478
- PWRCTRL_CPUTOP_IRQ_MASK15 0xfe00c47c
- PWRCTRL_CPUTOP_MEMPD_INIT_SET 0xfe00c480
- PWRCTRL_CPUTOP_MEMPD_OFF_SET 0xfe00c484
- PWRCTRL_CPUTOP_MEMPD_ON_A_SET 0xfe00c488
- PWRCTRL_CPUTOP_MEMPD_ON_B_SET 0xfe00c48c
- PWRCTRL_CPUTOP_MEMPD_ON_C_SET 0xfe00c490
- PWRCTRL_CPUTOP_MEMPD_ON_D_SET 0xfe00c494
- PWRCTRL_CPUTOP_MEMPD_STS 0xfe00c498
- PWRCTRL_CPUTOP_FSM_STS0 0xfe00c49c
- PWRCTRL_CPUTOP_FSM_STS1 0xfe00c4a0
- PWRCTRL_CPUTOP_FSM_STS2 0xfe00c4a4
- PWRCTRL_CPUTOP_FSM_START_OFF 0xfe00c4b4
- PWRCTRL_CPUTOP_FSM_START_ON 0xfe00c4b8
- PWRCTRL_CPUTOP_FSM_JUMP 0xfe00c4bc
- PWRCTRL_DSPA_AUTO_OFF_CTRL0 0xfe00c4c0

Amlogic Proprietary and Confidential
Copyright © Amlogic. All rights reserved.

- PWRCTRL_DSPA_AUTO_OFF_CTRL1 0xfe00c4c4
- PWRCTRL_DSPA_AUTO_OFF_CTRL2 0xfe00c4c8
- PWRCTRL_DSPA_AUTO_OFF_CTRL3 0xfe00c4cc
- PWRCTRL_DSPA_AUTO_OFF_CTRL4 0xfe00c4d0
- PWRCTRL_DSPA_AUTO_OFF_CTRL5 0xfe00c4d4
- PWRCTRL_DSPA_TIMER_TH_01 0xfe00c4e0
- PWRCTRL_DSPA_TIMER_TH_23 0xfe00c4e4
- PWRCTRL_DSPA_TIMER_TH_45 0xfe00c4e8
- PWRCTRL_DSPA_TIMER_TH_67 0xfe00c4ec
- PWRCTRL_DSPA_TIMER_TH_89 0xfe00c4f0
- PWRCTRL_DSPA_IRQ_MASK0 0xfe00c500
- PWRCTRL_DSPA_IRQ_MASK1 0xfe00c504
- PWRCTRL_DSPA_IRQ_MASK2 0xfe00c508
- PWRCTRL_DSPA_IRQ_MASK3 0xfe00c50c
- PWRCTRL_DSPA_IRQ_MASK4 0xfe00c510
- PWRCTRL_DSPA_IRQ_MASK5 0xfe00c514
- PWRCTRL_DSPA_IRQ_MASK6 0xfe00c518
- PWRCTRL_DSPA_IRQ_MASK7 0xfe00c51c
- PWRCTRL_DSPA_IRQ_MASK8 0xfe00c520
- PWRCTRL_DSPA_IRQ_MASK9 0xfe00c524
- PWRCTRL_DSPA_IRQ_MASK10 0xfe00c528
- PWRCTRL_DSPA_IRQ_MASK11 0xfe00c52c
- PWRCTRL_DSPA_IRQ_MASK12 0xfe00c530
- PWRCTRL_DSPA_IRQ_MASK13 0xfe00c534
- PWRCTRL_DSPA_IRQ_MASK14 0xfe00c538
- PWRCTRL_DSPA_IRQ_MASK15 0xfe00c53c
- PWRCTRL_DSPA_MEMPD_INIT_SET 0xfe00c540
- PWRCTRL_DSPA_MEMPD_OFF_SET 0xfe00c544
- PWRCTRL_DSPA_MEMPD_ON_A_SET 0xfe00c548
- PWRCTRL_DSPA_MEMPD_ON_B_SET 0xfe00c54c
- PWRCTRL_DSPA_MEMPD_ON_C_SET 0xfe00c550
- PWRCTRL_DSPA_MEMPD_ON_D_SET 0xfe00c554
- PWRCTRL_DSPA_MEMPD_STS 0xfe00c558
- PWRCTRL_DSPA_FSM_STS0 0xfe00c55c
- PWRCTRL_DSPA_FSM_STS1 0xfe00c560
- PWRCTRL_DSPA_FSM_STS2 0xfe00c564
- PWRCTRL_DSPA_FSM_START_OFF 0xfe00c574
- PWRCTRL_DSPA_FSM_START_ON 0xfe00c578
- PWRCTRL_DSPA_FSM_JUMP 0xfe00c57c
- PWRCTRL_DSPB_AUTO_OFF_CTRL0 0xfe00c580
- PWRCTRL_DSPB_AUTO_OFF_CTRL1 0xfe00c584
- PWRCTRL_DSPB_AUTO_OFF_CTRL2 0xfe00c588
- PWRCTRL_DSPB_AUTO_OFF_CTRL3 0xfe00c58c
- PWRCTRL_DSPB_AUTO_OFF_CTRL4 0xfe00c590

Amlogic Proprietary and Confidential
Copyright © Amlogic. All rights reserved.

- PWRCTRL_DSPB_AUTO_OFF_CTRL5 0xfe00c594
- PWRCTRL_DSPB_TIMER_TH_01 0xfe00c5a0
- PWRCTRL_DSPB_TIMER_TH_23 0xfe00c5a4
- PWRCTRL_DSPB_TIMER_TH_45 0xfe00c5a8
- PWRCTRL_DSPB_TIMER_TH_67 0xfe00c5ac
- PWRCTRL_DSPB_TIMER_TH_89 0xfe00c5b0
- PWRCTRL_DSPB_IRQ_MASK0 0xfe00c5c0
- PWRCTRL_DSPB_IRQ_MASK1 0xfe00c5c4
- PWRCTRL_DSPB_IRQ_MASK2 0xfe00c5c8
- PWRCTRL_DSPB_IRQ_MASK3 0xfe00c5cc
- PWRCTRL_DSPB_IRQ_MASK4 0xfe00c5d0
- PWRCTRL_DSPB_IRQ_MASK5 0xfe00c5d4
- PWRCTRL_DSPB_IRQ_MASK6 0xfe00c5d8
- PWRCTRL_DSPB_IRQ_MASK7 0xfe00c5dc
- PWRCTRL_DSPB_IRQ_MASK8 0xfe00c5e0
- PWRCTRL_DSPB_IRQ_MASK9 0xfe00c5e4
- PWRCTRL_DSPB_IRQ_MASK10 0xfe00c5e8
- PWRCTRL_DSPB_IRQ_MASK11 0xfe00c5ec
- PWRCTRL_DSPB_IRQ_MASK12 0xfe00c5f0
- PWRCTRL_DSPB_IRQ_MASK13 0xfe00c5f4
- PWRCTRL_DSPB_IRQ_MASK14 0xfe00c5f8
- PWRCTRL_DSPB_IRQ_MASK15 0xfe00c5fc
- PWRCTRL_DSPB_MEMPD_INIT_SET 0xfe00c600
- PWRCTRL_DSPB_MEMPD_OFF_SET 0xfe00c604
- PWRCTRL_DSPB_MEMPD_ON_A_SET 0xfe00c608
- PWRCTRL_DSPB_MEMPD_ON_B_SET 0xfe00c60c
- PWRCTRL_DSPB_MEMPD_ON_C_SET 0xfe00c610
- PWRCTRL_DSPB_MEMPD_ON_D_SET 0xfe00c614
- PWRCTRL_DSPB_MEMPD_STS 0xfe00c618
- PWRCTRL_DSPB_FSM_STS0 0xfe00c61c
- PWRCTRL_DSPB_FSM_STS1 0xfe00c620
- PWRCTRL_DSPB_FSM_STS2 0xfe00c624
- PWRCTRL_DSPB_FSM_START_OFF 0xfe00c634
- PWRCTRL_DSPB_FSM_START_ON 0xfe00c638
- PWRCTRL_DSPB_FSM_JUMP 0xfe00c63c
- PWRCTRL_A730_AUTO_OFF_CTRL0 0xfe00c640
- PWRCTRL_A730_AUTO_OFF_CTRL1 0xfe00c644
- PWRCTRL_A730_AUTO_OFF_CTRL2 0xfe00c648
- PWRCTRL_A730_AUTO_OFF_CTRL3 0xfe00c64c
- PWRCTRL_A730_AUTO_OFF_CTRL4 0xfe00c650
- PWRCTRL_A730_AUTO_OFF_CTRL5 0xfe00c654
- PWRCTRL_A730_TIMER_TH_01 0xfe00c660
- PWRCTRL_A730_TIMER_TH_23 0xfe00c664
- PWRCTRL_A730_TIMER_TH_45 0xfe00c668

Amlogic Proprietary and Confidential
Copyright © Amlogic. All rights reserved.

- PWRCTRL_A730_TIMER_TH_67 0xfe00c66c
- PWRCTRL_A730_TIMER_TH_89 0xfe00c670
- PWRCTRL_A730_IRQ_MASK0 0xfe00c680
- PWRCTRL_A730_IRQ_MASK1 0xfe00c684
- PWRCTRL_A730_IRQ_MASK2 0xfe00c688
- PWRCTRL_A730_IRQ_MASK3 0xfe00c68c
- PWRCTRL_A730_IRQ_MASK4 0xfe00c690
- PWRCTRL_A730_IRQ_MASK5 0xfe00c694
- PWRCTRL_A730_IRQ_MASK6 0xfe00c698
- PWRCTRL_A730_IRQ_MASK7 0xfe00c69c
- PWRCTRL_A730_IRQ_MASK8 0xfe00c6a0
- PWRCTRL_A730_IRQ_MASK9 0xfe00c6a4
- PWRCTRL_A730_IRQ_MASK10 0xfe00c6a8
- PWRCTRL_A730_IRQ_MASK11 0xfe00c6ac
- PWRCTRL_A730_IRQ_MASK12 0xfe00c6b0
- PWRCTRL_A730_IRQ_MASK13 0xfe00c6b4
- PWRCTRL_A730_IRQ_MASK14 0xfe00c6b8
- PWRCTRL_A730_IRQ_MASK15 0xfe00c6bc
- PWRCTRL_A730_MEMPD_INIT_SET 0xfe00c6c0
- PWRCTRL_A730_MEMPD_OFF_SET 0xfe00c6c4
- PWRCTRL_A730_MEMPD_ON_A_SET 0xfe00c6c8
- PWRCTRL_A730_MEMPD_ON_B_SET 0xfe00c6cc
- PWRCTRL_A730_MEMPD_ON_C_SET 0xfe00c6d0
- PWRCTRL_A730_MEMPD_ON_D_SET 0xfe00c6d4
- PWRCTRL_A730_MEMPD_STS 0xfe00c6d8
- PWRCTRL_A730_FSM_STS0 0xfe00c6dc
- PWRCTRL_A730_FSM_STS1 0xfe00c6e0
- PWRCTRL_A730_FSM_STS2 0xfe00c6e4
- PWRCTRL_A730_FSM_START_OFF 0xfe00c6f4
- PWRCTRL_A730_FSM_START_ON 0xfe00c6f8
- PWRCTRL_A730_FSM_JUMP 0xfe00c6fc
- PWRCTRL_A731_AUTO_OFF_CTRL0 0xfe00c700
- PWRCTRL_A731_AUTO_OFF_CTRL1 0xfe00c704
- PWRCTRL_A731_AUTO_OFF_CTRL2 0xfe00c708
- PWRCTRL_A731_AUTO_OFF_CTRL3 0xfe00c70c
- PWRCTRL_A731_AUTO_OFF_CTRL4 0xfe00c710
- PWRCTRL_A731_AUTO_OFF_CTRL5 0xfe00c714
- PWRCTRL_A731_TIMER_TH_01 0xfe00c720
- PWRCTRL_A731_TIMER_TH_23 0xfe00c724
- PWRCTRL_A731_TIMER_TH_45 0xfe00c728
- PWRCTRL_A731_TIMER_TH_67 0xfe00c72c
- PWRCTRL_A731_TIMER_TH_89 0xfe00c730
- PWRCTRL_A731_IRQ_MASK0 0xfe00c740
- PWRCTRL_A731_IRQ_MASK1 0xfe00c744

Amlogic Proprietary and Confidential
Copyright © Amlogic. All rights reserved.

- PWRCTRL_A731_IRQ_MASK2 0xfe00c748
- PWRCTRL_A731_IRQ_MASK3 0xfe00c74c
- PWRCTRL_A731_IRQ_MASK4 0xfe00c750
- PWRCTRL_A731_IRQ_MASK5 0xfe00c754
- PWRCTRL_A731_IRQ_MASK6 0xfe00c758
- PWRCTRL_A731_IRQ_MASK7 0xfe00c75c
- PWRCTRL_A731_IRQ_MASK8 0xfe00c760
- PWRCTRL_A731_IRQ_MASK9 0xfe00c764
- PWRCTRL_A731_IRQ_MASK10 0xfe00c768
- PWRCTRL_A731_IRQ_MASK11 0xfe00c76c
- PWRCTRL_A731_IRQ_MASK12 0xfe00c770
- PWRCTRL_A731_IRQ_MASK13 0xfe00c774
- PWRCTRL_A731_IRQ_MASK14 0xfe00c778
- PWRCTRL_A731_IRQ_MASK15 0xfe00c77c
- PWRCTRL_A731_MEMPD_INIT_SET 0xfe00c780
- PWRCTRL_A731_MEMPD_OFF_SET 0xfe00c784
- PWRCTRL_A731_MEMPD_ON_A_SET 0xfe00c788
- PWRCTRL_A731_MEMPD_ON_B_SET 0xfe00c78c
- PWRCTRL_A731_MEMPD_ON_C_SET 0xfe00c790
- PWRCTRL_A731_MEMPD_ON_D_SET 0xfe00c794
- PWRCTRL_A731_MEMPD_STS 0xfe00c798
- PWRCTRL_A731_FSM_STS0 0xfe00c79c
- PWRCTRL_A731_FSM_STS1 0xfe00c7a0
- PWRCTRL_A731_FSM_STS2 0xfe00c7a4
- PWRCTRL_A731_FSM_START_OFF 0xfe00c7b4
- PWRCTRL_A731_FSM_START_ON 0xfe00c7b8
- PWRCTRL_A731_FSM_JUMP 0xfe00c7bc
- PWRCTRL_A732_AUTO_OFF_CTRL0 0xfe00c7c0
- PWRCTRL_A732_AUTO_OFF_CTRL1 0xfe00c7c4
- PWRCTRL_A732_AUTO_OFF_CTRL2 0xfe00c7c8
- PWRCTRL_A732_AUTO_OFF_CTRL3 0xfe00c7cc
- PWRCTRL_A732_AUTO_OFF_CTRL4 0xfe00c7d0
- PWRCTRL_A732_AUTO_OFF_CTRL5 0xfe00c7d4
- PWRCTRL_A732_TIMER_TH_01 0xfe00c7e0
- PWRCTRL_A732_TIMER_TH_23 0xfe00c7e4
- PWRCTRL_A732_TIMER_TH_45 0xfe00c7e8
- PWRCTRL_A732_TIMER_TH_67 0xfe00c7ec
- PWRCTRL_A732_TIMER_TH_89 0xfe00c7f0
- PWRCTRL_A732_IRQ_MASK0 0xfe00c800
- PWRCTRL_A732_IRQ_MASK1 0xfe00c804
- PWRCTRL_A732_IRQ_MASK2 0xfe00c808
- PWRCTRL_A732_IRQ_MASK3 0xfe00c80c
- PWRCTRL_A732_IRQ_MASK4 0xfe00c810
- PWRCTRL_A732_IRQ_MASK5 0xfe00c814

Amlogic Proprietary and Confidential
Copyright © Amlogic. All rights reserved.

- PWRCTRL_A732_IRQ_MASK6 0xfe00c818
- PWRCTRL_A732_IRQ_MASK7 0xfe00c81c
- PWRCTRL_A732_IRQ_MASK8 0xfe00c820
- PWRCTRL_A732_IRQ_MASK9 0xfe00c824
- PWRCTRL_A732_IRQ_MASK10 0xfe00c828
- PWRCTRL_A732_IRQ_MASK11 0xfe00c82c
- PWRCTRL_A732_IRQ_MASK12 0xfe00c830
- PWRCTRL_A732_IRQ_MASK13 0xfe00c834
- PWRCTRL_A732_IRQ_MASK14 0xfe00c838
- PWRCTRL_A732_IRQ_MASK15 0xfe00c83c
- PWRCTRL_A732_MEMPD_INIT_SET 0xfe00c840
- PWRCTRL_A732_MEMPD_OFF_SET 0xfe00c844
- PWRCTRL_A732_MEMPD_ON_A_SET 0xfe00c848
- PWRCTRL_A732_MEMPD_ON_B_SET 0xfe00c84c
- PWRCTRL_A732_MEMPD_ON_C_SET 0xfe00c850
- PWRCTRL_A732_MEMPD_ON_D_SET 0xfe00c854
- PWRCTRL_A732_MEMPD_STS 0xfe00c858
- PWRCTRL_A732_FSM_STS0 0xfe00c85c
- PWRCTRL_A732_FSM_STS1 0xfe00c860
- PWRCTRL_A732_FSM_STS2 0xfe00c864
- PWRCTRL_A732_FSM_START_OFF 0xfe00c874
- PWRCTRL_A732_FSM_START_ON 0xfe00c878
- PWRCTRL_A732_FSM_JUMP 0xfe00c87c
- PWRCTRL_A733_AUTO_OFF_CTRL0 0xfe00c880
- PWRCTRL_A733_AUTO_OFF_CTRL1 0xfe00c884
- PWRCTRL_A733_AUTO_OFF_CTRL2 0xfe00c888
- PWRCTRL_A733_AUTO_OFF_CTRL3 0xfe00c88c
- PWRCTRL_A733_AUTO_OFF_CTRL4 0xfe00c890
- PWRCTRL_A733_AUTO_OFF_CTRL5 0xfe00c894
- PWRCTRL_A733_TIMER_TH_01 0xfe00c8a0
- PWRCTRL_A733_TIMER_TH_23 0xfe00c8a4
- PWRCTRL_A733_TIMER_TH_45 0xfe00c8a8
- PWRCTRL_A733_TIMER_TH_67 0xfe00c8ac
- PWRCTRL_A733_TIMER_TH_89 0xfe00c8b0
- PWRCTRL_A733_IRQ_MASK0 0xfe00c8c0
- PWRCTRL_A733_IRQ_MASK1 0xfe00c8c4
- PWRCTRL_A733_IRQ_MASK2 0xfe00c8c8
- PWRCTRL_A733_IRQ_MASK3 0xfe00c8cc
- PWRCTRL_A733_IRQ_MASK4 0xfe00c8d0
- PWRCTRL_A733_IRQ_MASK5 0xfe00c8d4
- PWRCTRL_A733_IRQ_MASK6 0xfe00c8d8
- PWRCTRL_A733_IRQ_MASK7 0xfe00c8dc
- PWRCTRL_A733_IRQ_MASK8 0xfe00c8e0
- PWRCTRL_A733_IRQ_MASK9 0xfe00c8e4

Amlogic Proprietary and Confidential
Copyright © Amlogic. All rights reserved.

- PWRCTRL_A733_IRQ_MASK10 0xfe00c8e8
- PWRCTRL_A733_IRQ_MASK11 0xfe00c8ec
- PWRCTRL_A733_IRQ_MASK12 0xfe00c8f0
- PWRCTRL_A733_IRQ_MASK13 0xfe00c8f4
- PWRCTRL_A733_IRQ_MASK14 0xfe00c8f8
- PWRCTRL_A733_IRQ_MASK15 0xfe00c8fc
- PWRCTRL_A733_MEMPD_INIT_SET 0xfe00c900
- PWRCTRL_A733_MEMPD_OFF_SET 0xfe00c904
- PWRCTRL_A733_MEMPD_ON_A_SET 0xfe00c908
- PWRCTRL_A733_MEMPD_ON_B_SET 0xfe00c90c
- PWRCTRL_A733_MEMPD_ON_C_SET 0xfe00c910
- PWRCTRL_A733_MEMPD_ON_D_SET 0xfe00c914
- PWRCTRL_A733_MEMPD_STS 0xfe00c918
- PWRCTRL_A733_FSM_STS0 0xfe00c91c
- PWRCTRL_A733_FSM_STS1 0xfe00c920
- PWRCTRL_A733_FSM_STS2 0xfe00c924
- PWRCTRL_A733_FSM_START_OFF 0xfe00c934
- PWRCTRL_A733_FSM_START_ON 0xfe00c938
- PWRCTRL_A733_FSM_JUMP 0xfe00c93c
- PWRCTRL_A73TOP_AUTO_OFF_CTRL0 0xfe00c940
- PWRCTRL_A73TOP_AUTO_OFF_CTRL1 0xfe00c944
- PWRCTRL_A73TOP_AUTO_OFF_CTRL2 0xfe00c948
- PWRCTRL_A73TOP_AUTO_OFF_CTRL3 0xfe00c94c
- PWRCTRL_A73TOP_AUTO_OFF_CTRL4 0xfe00c950
- PWRCTRL_A73TOP_AUTO_OFF_CTRL5 0xfe00c954
- PWRCTRL_A73TOP_TIMER_TH_01 0xfe00c960
- PWRCTRL_A73TOP_TIMER_TH_23 0xfe00c964
- PWRCTRL_A73TOP_TIMER_TH_45 0xfe00c968
- PWRCTRL_A73TOP_TIMER_TH_67 0xfe00c96c
- PWRCTRL_A73TOP_TIMER_TH_89 0xfe00c970
- PWRCTRL_A73TOP_IRQ_MASK0 0xfe00c980
- PWRCTRL_A73TOP_IRQ_MASK1 0xfe00c984
- PWRCTRL_A73TOP_IRQ_MASK2 0xfe00c988
- PWRCTRL_A73TOP_IRQ_MASK3 0xfe00c98c
- PWRCTRL_A73TOP_IRQ_MASK4 0xfe00c990
- PWRCTRL_A73TOP_IRQ_MASK5 0xfe00c994
- PWRCTRL_A73TOP_IRQ_MASK6 0xfe00c998
- PWRCTRL_A73TOP_IRQ_MASK7 0xfe00c99c
- PWRCTRL_A73TOP_IRQ_MASK8 0xfe00c9a0
- PWRCTRL_A73TOP_IRQ_MASK9 0xfe00c9a4
- PWRCTRL_A73TOP_IRQ_MASK10 0xfe00c9a8
- PWRCTRL_A73TOP_IRQ_MASK11 0xfe00c9ac
- PWRCTRL_A73TOP_IRQ_MASK12 0xfe00c9b0
- PWRCTRL_A73TOP_IRQ_MASK13 0xfe00c9b4

Amlogic Proprietary and Confidential
Copyright © Amlogic. All rights reserved.

- PWRCTRL_A73TOP_IRQ_MASK14 0xfe00c9b8
- PWRCTRL_A73TOP_IRQ_MASK15 0xfe00c9bc
- PWRCTRL_A73TOP_MEMPD_INIT_SET 0xfe00c9c0
- PWRCTRL_A73TOP_MEMPD_OFF_SET 0xfe00c9c4
- PWRCTRL_A73TOP_MEMPD_ON_A_SET 0xfe00c9c8
- PWRCTRL_A73TOP_MEMPD_ON_B_SET 0xfe00c9cc
- PWRCTRL_A73TOP_MEMPD_ON_C_SET 0xfe00c9d0
- PWRCTRL_A73TOP_MEMPD_ON_D_SET 0xfe00c9d4
- PWRCTRL_A73TOP_MEMPD_STS 0xfe00c9d8
- PWRCTRL_A73TOP_FSM_STS0 0xfe00c9dc
- PWRCTRL_A73TOP_FSM_STS1 0xfe00c9e0
- PWRCTRL_A73TOP_FSM_STS2 0xfe00c9e4
- PWRCTRL_A73TOP_FSM_START_OFF 0xfe00c9f4
- PWRCTRL_A73TOP_FSM_START_ON 0xfe00c9f8
- PWRCTRL_A73TOP_FSM_JUMP 0xfe00c9fc

Register Description

PWRCTRL_PWR_ACK0

Read only, the status of each power domain.

PWRCTRL_ISO_EN0

isolation the interface of each power domain.

PWRCTRL_PWR_OFF0

power off each power domain

Table 7-1 PWRCTRL_PWR_OFF0 Control Bit

Bit	Module	Default
31	DSI1	OFF
30	EDP1	OFF
29	EDP0	OFF
28	SPICC5	OFF
27	SPICC4	OFF
26	SPICC3	OFF
25	SPICC2	OFF
24	SPICC1	
23	SPICC0	OFF
22	DSI0	OFF
21		
20	NIC3	OFF
19	NIC2	ON
18	NOC	ON
17	DMC1	ON

Amlogic Proprietary and Confidential
Copyright © Amlogic. All rights reserved.

Bit	Module	Default
16	DMC0	ON
15	DDR1	ON
14	DDR0	ON
13		
12	NNA	OFF
11	NNA	OFF
10	NNA	OFF
9	NNA	OFF
8	NNA	OFF
7		
6		
5		
4	MALI(iso/ack)	
3	MALI(ack)	
2	MALI(ack)	
1	MALI(ack)	
0	MALI(ack)	

Note

Mali power off/on inside of IP, ISO_EN1[4] is iso_en_mali_top, ACK1[4:0] are pwr_ack_mali[4:0].

PWRCTRL_PWR_ACK1

read only, the status of each power domain.

PWRCTRL_ISO_EN1

isolation the interface of each power domain.

PWRCTRL_PWR_OFF1

power off each power domain

Table 7-2 PWRCTRL_MEM_PD0

Bit(s)	R/W	Default	Description
31:0	R/W	0xFFFF-FFFF	DOS_VDEC

Table 7-3 PWRCTRL_MEM_PD1

Bit(s)	R/W	Default	Description
31:0	R/W	0xFFFF-FFFF	DOS_HCODEC

Amlogic Proprietary and Confidential
Copyright © Amlogic. All rights reserved.

Table 7-4 PWRCTRL_MEM_PD2

Bit(s)	R/W	Default	Description
31:0	R/W	0xFFFF-FFFF	DOS_HEVC

Table 7-5 PWRCTRL_MEM_PD3

Bit(s)	R/W	Default	Description
31:0	R/W	0x00	reserved
25:24	R/W	0x0	NOC
23:0	R/W	0x0000-00	reserved

Table 7-6 PWRCTRL_MEM_PD4

Bit(s)	R/W	Default	Description
31:0	R/W	0xFFFF-FFFF	AUDIO

Table 7-7 PWRCTRL_MEM_PD5

Bit(s)	R/W	Default	Description
31:0	R/W	0xFFFF-FFFF	vpu

Table 7-8 PWRCTRL_MEM_PD6

Bit(s)	R/W	Default	Description
31:0	R/W	0xFFFF-FFFF	vpu

Table 7-9 PWRCTRL_MEM_PD7

Bit(s)	R/W	Default	Description
31:0	R/W	0xFFFF-FFFF	vpu

Table 7-10 PWRCTRL_MEM_PD8

Bit(s)	R/W	Default	Description
31:0	R/W	0xFFFF-FFFF	vpu

Amlogic Proprietary and Confidential
Copyright © Amlogic. All rights reserved.

Table 7-11 PWRCTRL_MEM_PD9

Bit(s)	R/W	Default	Description
31:0	R/W	0xFFFF-FFFF	vpu

Table 7-12 PWRCTRL_MEM_PD10

Bit(s)	R/W	Default	Description
31:0	R/W	0xFFFF-FFFF	vpu

Table 7-13 PWRCTRL_MEM_PD11

Bit(s)	R/W	Default	Description
31:30	R/W	0x0	USBCTRL
29:26	R/W	0xF	PCIECTRL
25:18	R/W	0xFF	GE2D
17:16	R/W	0x0	reserved
15:8	R/W	0xFF	HDMI
7:6	R/W	0x0	reserved
5:4	R/W	0x0	AUCPU
3:2	R/W	0x0	ETH
1:0	R/W	0x0	reserved

Table 7-14 PWRCTRL_MEM_PD12

Bit(s)	R/W	Default	Description
31:16	R/W	0x0	RAMB
15:0	R/W	0x0	RAMA

Table 7-15 PWRCTRL_MEM_PD13

Bit(s)	R/W	Default	Description
31:0	R/W	0xFFFF-FFFF	ISP

Table 7-16 PWRCTRL_MEM_PD14

Bit(s)	R/W	Default	Description
31:0	R/W	0xFFFF-FFFF	ISP

Amlogic Proprietary and Confidential
Copyright © Amlogic. All rights reserved.

Table 7-17 PWRCTRL_MEM_PD15

Bit(s)	R/W	Default	Description
31:0	R/W	0xFFFF-FFFF	ISP

Table 7-18 PWRCTRL_MEM_PD16

Bit(s)	R/W	Default	Description
31:0	R/W	0xFFFF-FFFF	ISP

Table 7-19 PWRCTRL_MEM_PD17

Bit(s)	R/W	Default	Description
31:0	R/W	0xFFFF-FFFF	ISP

Table 7-20 PWRCTRL_MEM_PD18

Bit(s)	R/W	Default	Description
31:30	R/W	0x3	reserved
29:28	R/W	0x3	edp0_txctrl_mem_pd
27:26	R/W	0x3	edp1_txctrl_mem_pd
25:24	R/W	0x3	gdc_mem_pd
23:20	R/W	0xf	dewarp_mem_pd
19:18	R/W	0x3	spicc0_mem_pd
17:16	R/W	0x3	Spicc1_mem_pd
15:14	R/W	0x3	Spicc2_mem_pd
13:12	R/W	0x3	Spicc3_mem_pd
11:10	R/W	0x3	Spicc4_mem_pd
9:8	R/W	0x3	Spicc5_mem_pd
7:6	R/W	0x3	reserved
5:4	R/W	0x0	sdioa_mem_pd
3:2	R/W	0x0	sdiob_mem_pd
1:0	R/W	0x0	emmc_mem_pd

Table 7-21 PWRCTRL_MEM_PD19

Bit(s)	R/W	Default	Description
31:0	R/W	0xFFFF-FFFF	WAVE

Amlogic Proprietary and Confidential
Copyright © Amlogic. All rights reserved.

Table 7-22 PWRCTRL_MEM_PD20

Bit(s)	R/W	Default	Description
31:0	R/W	0xFFFF-FFFF	WAVE

Table 7-23 PWRCTRL_MEM_PD21

Bit(s)	R/W	Default	Description
31:0	R/W	0xFFFF-FFFF	WAVE

Table 7-24 PWRCTRL_MEM_PD22

Bit(s)	R/W	Default	Description
31:0	R/W	0xFFFF-FFFF	anakin_mem_pd

Table 7-25 PWRCTRL_MEM_PD23

Bit(s)	R/W	Default	Description
31:28	R/W	0xF	anakin_mem_pd
27:26	R/W	0x3	dsi_a_mem_pd
25:24	R/W	0x3	dsi_b_mem_pd
23:8	R/W	0xff	reserved
7:6	R/W	0x0	dmc0_mem_pd
5:4	R/W	0x0	dmc1_mem_pd
3:2	R/W	0x0	ddr0_mem_pd
1:0	R/W	0x0	ddr1_mem_pd

Table 7-26 PWRCTRL_MEM_PD24

Bit(s)	R/W	Default	Description
31:0	R/W	0xFFFF-FFFF	hdmirx_mem_pd

For each A73/A53/DSP power domain that needs to power off by itself, so PWR_CTRL contains 7 PWR_FSM which can update the power related signals by hardware.

Amlogic Proprietary and Confidential
Copyright © Amlogic. All rights reserved.

Figure 7-5 PWR_FSM Signal Flow

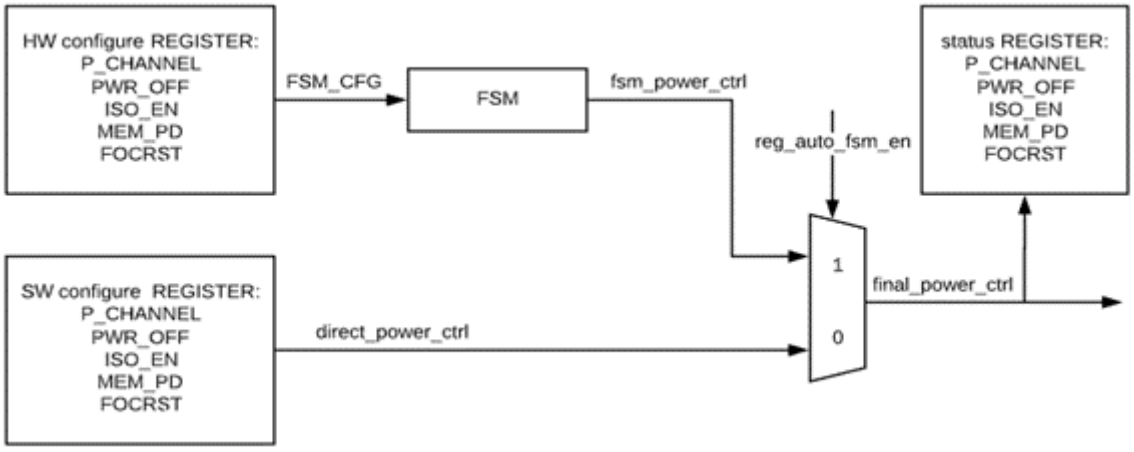

We can turn off/on these 7 cpu/dsp power domains in serial:

1. Turn off cpu_core0
2. Turn off cpu_top
1. Turn on cpu_top
2. Turn on cpu_core0

so all FSM_STS will send to each FSM.

Amlogic Proprietary and Confidential
Copyright © Amlogic. All rights reserved.

Figure 7-6 FSM Function

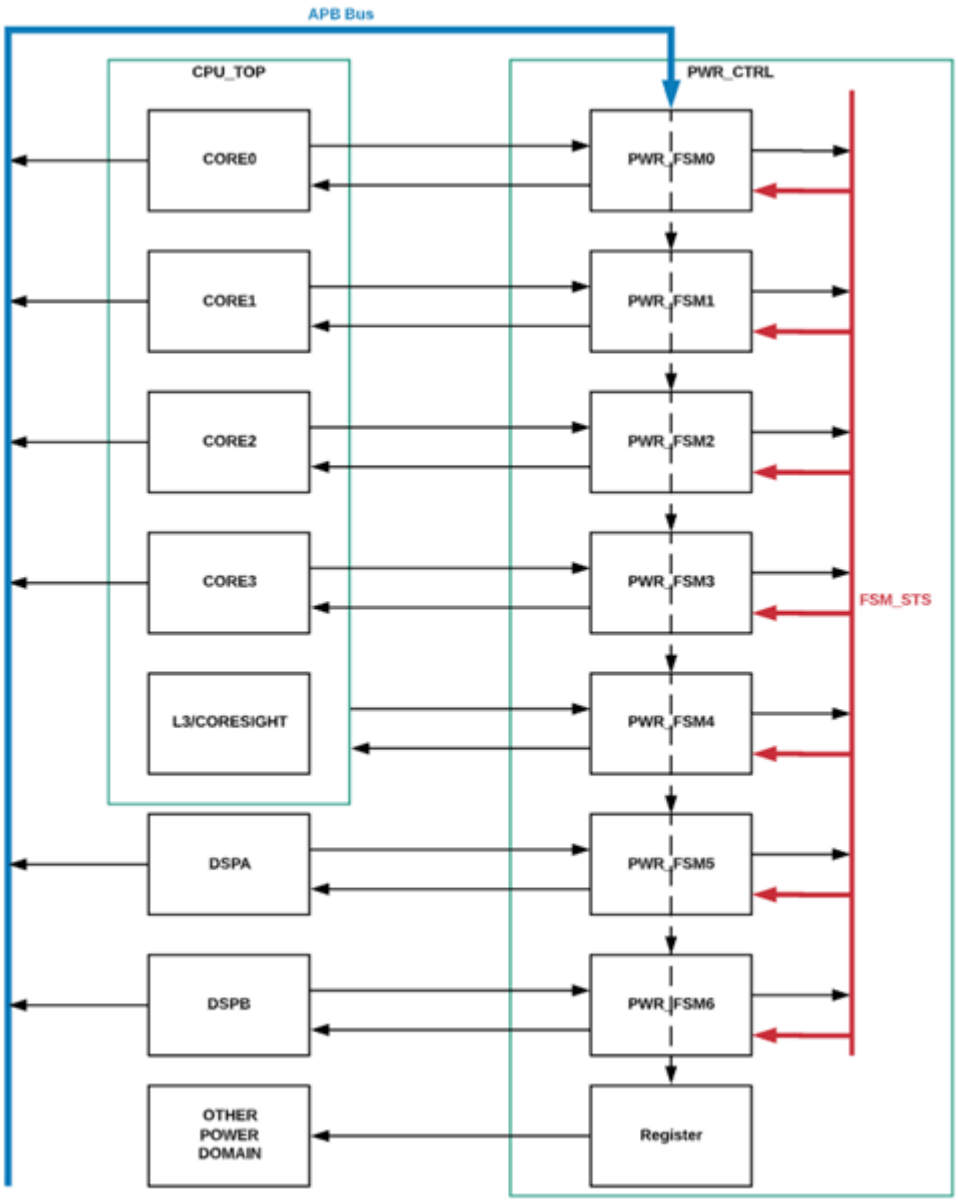

Here's an example of HW(PWR_FSM) work flow:

1. Configure all related register
2. Start_pwr_off
3. Wait for other pwr_fsm status, check is it finished power off flow
4. Start handshake if need;
5. Start power off flow by sequence;
6. Wait for interrupt to start power on;
7. Wait for other pwr_fsm status, check is it finished power on flow;
8. Start power on flow by sequence;
9. Start handshake if need;

Amlogic Proprietary and Confidential
Copyright © Amlogic. All rights reserved.

Figure 7-7 FSM Work Flow Chart

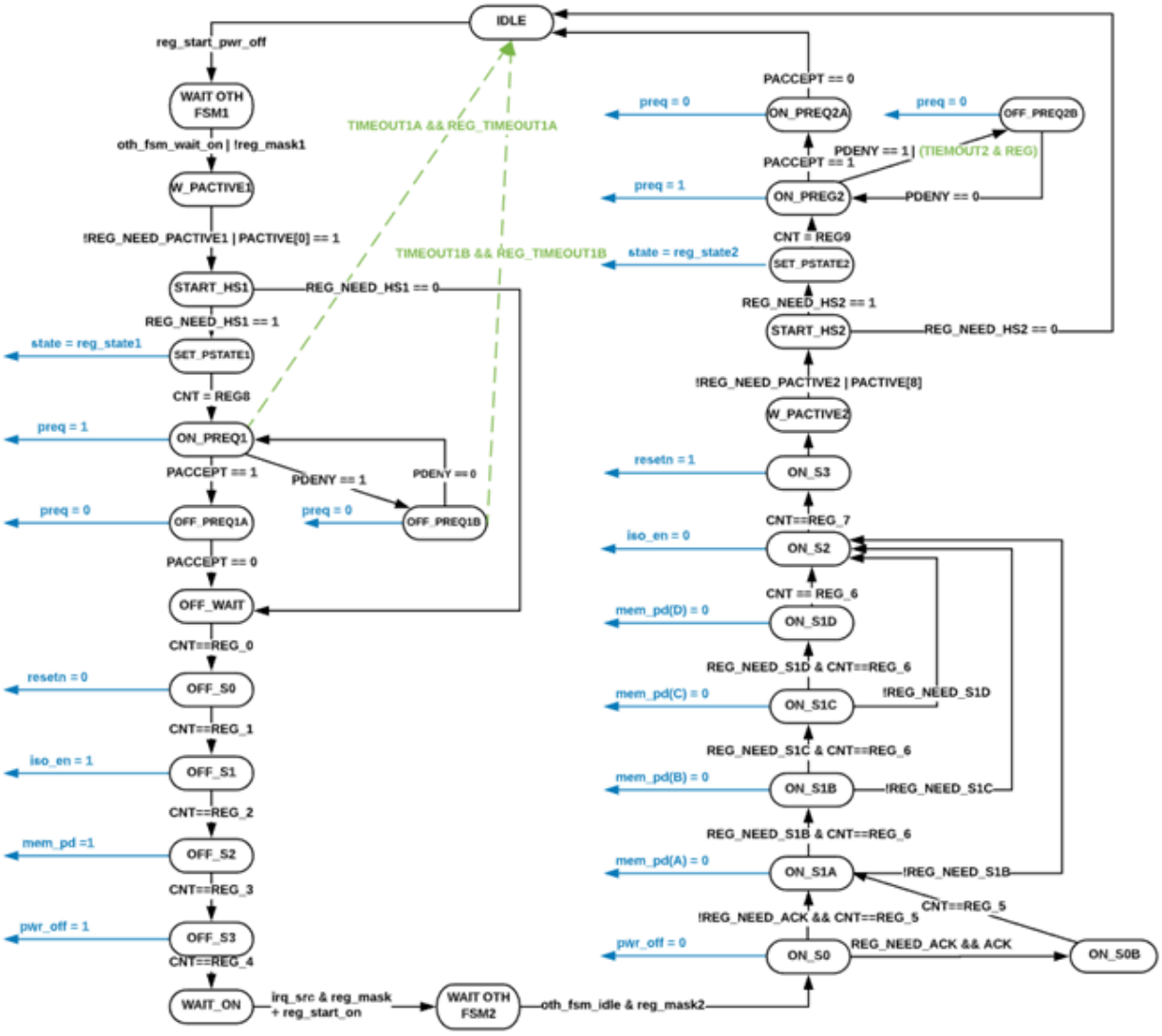

Table 7-27 PWRCTRL_AUTO_OFF_CTRL0

Bits	R/W	Default	Description
31	R/W	0	REG_FSM_EN
30	R/W	0	REG_GATE_ALL_ON; force all clock gate are on;
29	R/W	0	REG_NEED_ACK_EN; set 1 ,ON_S0 will jump to ON_S0B
27	R/W	0	REG_ACK_INV, set 1, will invert PWR_ACK;
25:24	R/W	0	REG_TIMER_CNT_TICK_SEL; 0:timer_tick = sys_clk; 1:timer_tick = 1us; 2:timer_tick = 10us; 3:timer_tick = 100us;
23	R/W	0	REG_NEED_ON_S1B; set 1, ON_S1A will jump to ON_S1B;
22	R/W	0	REG_NEED_ON_S1C; set 1, ON_S1B will jump to ON_S1C;
21	R/W	0	REG_NEED_ON_S1D; set 1, ON_S1C will jump to ON_S1D;

Amlogic Proprietary and Confidential
Copyright © Amlogic. All rights reserved.

Bits	R/W	Default	Description
20	R/W	0	REG_SET_PSTATE; set 1, force pstate = REG_PSTATE;
19	R/W	0	REG_ON_NEED_HS; set 1, START_HS2 will jump to SET_PSTATE2;
18	R/W	0	REG_ON_NEED_PACTIVE; set 1 will force WAIT_PACTIVE2 jump to START_HS2;
17	R/W	0	REG_OFF_NEED_HS; set 1, START_HS1 will jump to SET_PSTATE1;
16	R/W	0	REG_OFF_NEED_PACTIVE; set 1 will force WAIT_PACTIVE1 jump to START_HS1;
11	R/W	0	REG_PWROFF_OFF_SET; PWR_OFF value when FSM_STS = OFF_S3;
10	R/W	0	REG_PWROFF_ON_SET; PWR_OFF value when FSM_STS = ON_S0;
8	R/W	0	REG_PWROFF_INIT_SET; PWR_OFF value when REG_FSM_EN = 0;
7	R/W	0	REG_ISOEN_OFF_SET; ISO_EN value when FSM_STS = OFF_S1;
6	R/W	0	REG_ISOEN_ON_SET; ISO_EN value when FSM_STS = ON_S2;
4	R/W	0	REG_ISOEN_INIT_SET; ISO_EN value when REG_FSM_EN = 0;
3	R/W	0	REG_FOCRST_OFF_SET; FOC_RST value when FSM_STS = OFF_S0;
2	R/W	0	REG_FOCRST_ON_SET; FOC_RST value when FSM_STS = ON_S3;
0	R/W	0	REG_FOCRST_INIT_SET; FOC_RST value when REG_FSM_EN = 0;

Table 7-28 PWRCTRL_*_AUTO_OFF_CTRL1**

Bits	R/W	Default	Description
30:24	R/W	0	reg_timeout_cnt_th_off_b
20:16	R/W	0	reg_fsm_jump_sts
15:8	R/W	0	reg_oth_fsm_on_mask; bit7: reserved; bit6: set 1, FSM_STS will move to ON_S0 when DSPB is IDLE bit5: set 1, FSM_STS will move to ON_S0 when DSPA is IDLE bit4: set 1, FSM_STS will move to ON_S0 when CPU_TOP is IDLE bit3: set 1, FSM_STS will move to ON_S0 when CPU_CORE3 is IDLE bit2: set 1, FSM_STS will move to ON_S0 when CPU_CORE2 is IDLE bit1: set 1, FSM_STS will move to ON_S0 when CPU_CORE1 is IDLE bit0: set 1, FSM_STS will move to ON_S0 when CPU_CORE0 is IDLE
7:0	R/W	0	reg_oth_fsm_off_mask; bit7: reserved; bit6: set 1, FSM_STS will move to WAIT_PACTIVE1 when DSPB is WAIT_ON bit5: set 1, FSM_STS will move to WAIT_PACTIVE1 when DSPA is WAIT_ON bit4: set 1, FSM_STS will move to WAIT_PACTIVE1 when CPU_TOP is WAIT_ON bit3: set 1, FSM_STS will move to WAIT_PACTIVE1 when CPU_CORE3 is WAIT_ON bit2: set 1, FSM_STS will move to WAIT_PACTIVE1 when CPU_CORE2 is WAIT_ON bit1: set 1, FSM_STS will move to WAIT_PACTIVE1 when CPU_CORE1 is WAIT_ON bit0: set 1, FSM_STS will move to WAIT_PACTIVE1 when CPU_CORE0 is WAIT_ON

Amlogic Proprietary and Confidential
Copyright © Amlogic. All rights reserved.

Table 7-29 PWRCTRL_*_AUTO_OFF_CTRL2**

Bits	R/W	Default	Description
31:16	R/W	0	reg_timeout_cnt_th_on_a
15:0	R/W	0	reg_timeout_cnt_th_off_a

Table 7-30 PWRCTRL_*_AUTO_OFF_CTRL3**

Bits	R/W	Default	Description
23:16	R/W	0	PSTATE value when REG_SET_PSATE = 0
15:8	R/W	0	PSTATE value when FSM_STS = SET_PSTATE1
7:0	R/W	0	PSTATE value when FSM_STS = SET_PSTATE2

Table 7-31 PWRCTRL_*_AUTO_OFF_CTRL4**

Bits	R/W	Default	Description
15:8	R/W	0	irq_clr, each bit can clear pwr_fsm internal irq status;
7:0	R/W	0	irq_en, each bit can enable internal irq to system;

Table 7-32 PWRCTRL_*_TIMER_TH_01**

Bits	R/W	Default	Description
31:16	R/W	0	timer count threshold 1; from OFF_S0 to OFF_S1;
15:0	R/W	0	timer count threshold 0; from OFF_WAIT to OFF_S0;

Table 7-33 PWRCTRL_*_TIMER_TH_23**

Bits	R/W	Default	Description
31:16	R/W	0	timer count threshold 3; from OFF_S2 to OFF_S3;
15:0	R/W	0	timer count threshold 2; from OFF_S1 to OFF_S2;

Table 7-34 PWRCTRL_*_TIMER_TH_45**

Bits	R/W	Default	Description
31:16	R/W	0	timer count threshold 5; from ON_S0/S0B to ON_S1A;
15:0	R/W	0	timer count threshold 4; from OFF_S3 to WAIT_ON;

Table 7-35 PWRCTRL_*_TIMER_TH_67**

Bits	R/W	Default	Description
31:16	R/W	0	timer count threshold 7; from ON_S2 to ON_S3;
15:0	R/W	0	timer count threshold 6; from ON_S1A/S1B/S1C/S1D to ON_S1B/S1C/S1D/S2;

Amlogic Proprietary and Confidential
Copyright © Amlogic. All rights reserved.

Table 7-36 PWRCTRL_*_TIMER_TH_89**

Bits	R/W	Default	Description
31:16	R/W	0	timer count threshold 9; from SET_PSTATE2 to ON_PREQ2;
15:0	R/W	0	timer count threshold 8; from SET_PSTATE1 to ON_PREQ1;

Table 7-37 PWRCTRL_*_IRQ_MASK0~7**

Bits	R/W	Default	Description
255:0	R/W	0	each bit: 1: jump to WAIT_OTH_FSM2 by this irq;

Table 7-38 PWRCTRL_*_MEMPD_INIT_SET**

Bits	R/W	Default	Description
31:0	R/W	0	MEMPD value when REG_FSM_EN = 0

Table 7-39 PWRCTRL_*_MEMPD_OFF_SET**

Bits	R/W	Default	Description
31:0	R/W	0	MEMPD value when FSM_STS = OFF_S2

Table 7-40 PWRCTRL_*_MEMPD_ON_A_SET**

Bits	R/W	Default	Description
31:0	R/W	0	MEMPD value when FSM_STS = ON_S1A

Table 7-41 PWRCTRL_*_MEMPD_ON_B_SET**

Bits	R/W	Default	Description
31:0	R/W	0	MEMPD value when FSM_STS = ON_S1B

Table 7-42 PWRCTRL_*_MEMPD_ON_C_SET**

Bits	R/W	Default	Description
31:0	R/W	0	MEMPD value when FSM_STS = ON_S1C

Table 7-43 PWRCTRL_*_MEMPD_ON_D_SET**

Bits	R/W	Default	Description
31:0	R/W	0	MEMPD value when FSM_STS = ON_S1D

Amlogic Proprietary and Confidential
Copyright © Amlogic. All rights reserved.

Table 7-44 PWRCTRL_*_MEMPD_STS**

Bits	R/W	Default	Description
31:0	R	0	final MEM_PD output

Table 7-45 PWRCTRL_*_FSM_STS0**

Bits	R/W	Default	Description

31:24	R	0	FSM_PWR internal irq sts;
			bit7: timeout_cnt_a > reg_timeout_cnt_th_off_a when FSM_STS = OFF_PREQ1;
			bit6: timeout_cnt_a > reg_timeout_cnt_th_on_a when FSM_STS = ON_PREQ1;
			bit5: timeout_cnt_b > reg_timeout_cnt_th_off_b when FSM_STS = OFF_PREQ1B;
			bit4: FSM_STS change to ON_START_HS;
			bit4: FSM_STS change to ON_S1A;
			bit3: FSM_STS change to OFF_WAIT;
			bit2: FSM_STS change to WAIT_ON;
			bit0: FSM_STS change to IDLE;

23:17	R	0	timeout_cnt_b add by FSM sts change: from ON_PREQ1 to OFF_PREQ1B; clear at FSM sts is OFF_PREQ1A and SET_PSTATE1
16:12	R	0	current FSM sts: 0:IDLE 1:WAIT_OTH_FSM1 2:WAIT_PACTIVE1 3:START_HS1 4:SET_PSTATE1 5:ON_PREQ1 6:OFF_PREQ1B 7:OFF_PREQ1A 8:OFF_WAIT 9:OFF_S0 10:OFF_S1 11:OFF_S2 12:OFF_S3 16:WAIT_ON 17:WAIT_OTH_FSM2 18:ON_S0 19:ON_S0B 20:ON_S1A 21:ON_S1B 22:ON_S1C 23:ON_S1D 24:ON_S2 25:ON_S3 26:WAIT_PACTIVE2 27:START_HS2 28:SET_PACTIVE2 29:ON_PREQ2 30:OFF_PREQ2B 31:OFF_PREQ2A
11	R	0	final PREQ output
10	R	0	final PWR_OFF output
9	R	0	final FOC_RST output
8	R	0	final ISO_EN output
7:0	R	0	final PSTATE output

Amlogic Proprietary and Confidential
Copyright © Amlogic. All rights reserved.

Table 7-46 PWRCTRL_*_FSM_STS1**

Bits	R/W	Default	Description
31:16	R	0	timeout_cnt_a add by clock when FSM sts is ON_PREQ1/ON_PREQ2; clear if FSM sts is other sts;
15:0	R	0	r_timer_cnt add by timer_tick; clear if FSM sts changed;

Table 7-47 PWRCTRL_*_FSM_STS2**

Bits	R/W	Default	Description
29:25	R	0	history5
24:20	R	0	history4
19:15	R	0	history3
14:10	R	0	history2
9::5	R	0	history1
4:0	R	0	history0

Table 7-48 PWRCTRL_*_FSM_START_OFF**

Bits	R/W	Default	Description
31:0	W	0	write any value will force FSM start from IDLE to WAIT_OTH_FSM1

Table 7-49 PWRCTRL_*_FSM_START_ON**

Bits	R/W	Default	Description
31:0	W	0	write any value will force FSM start from WAIT_ON to WAIT_OTH_FSM2

Table 7-50 PWRCTRL_*_FSM_JUMP**

Bits	R/W	Default	Description
31:0	W	0	write any value will force FSM jump to reg_fsm_jump_sts

7.3 System Booting

7.3.1 Overview

This part describes the power-on mode configuration of the SoC, which include two portions: Cortex-M3 for security control and A53 + A73 for others.

7.3.2 Power-on Flow Chart

The following figure illustrates the SoC's power on sequence.

Amlogic Proprietary and Confidential
Copyright © Amlogic. All rights reserved.

Figure 7-8 Power-on Flow Chart

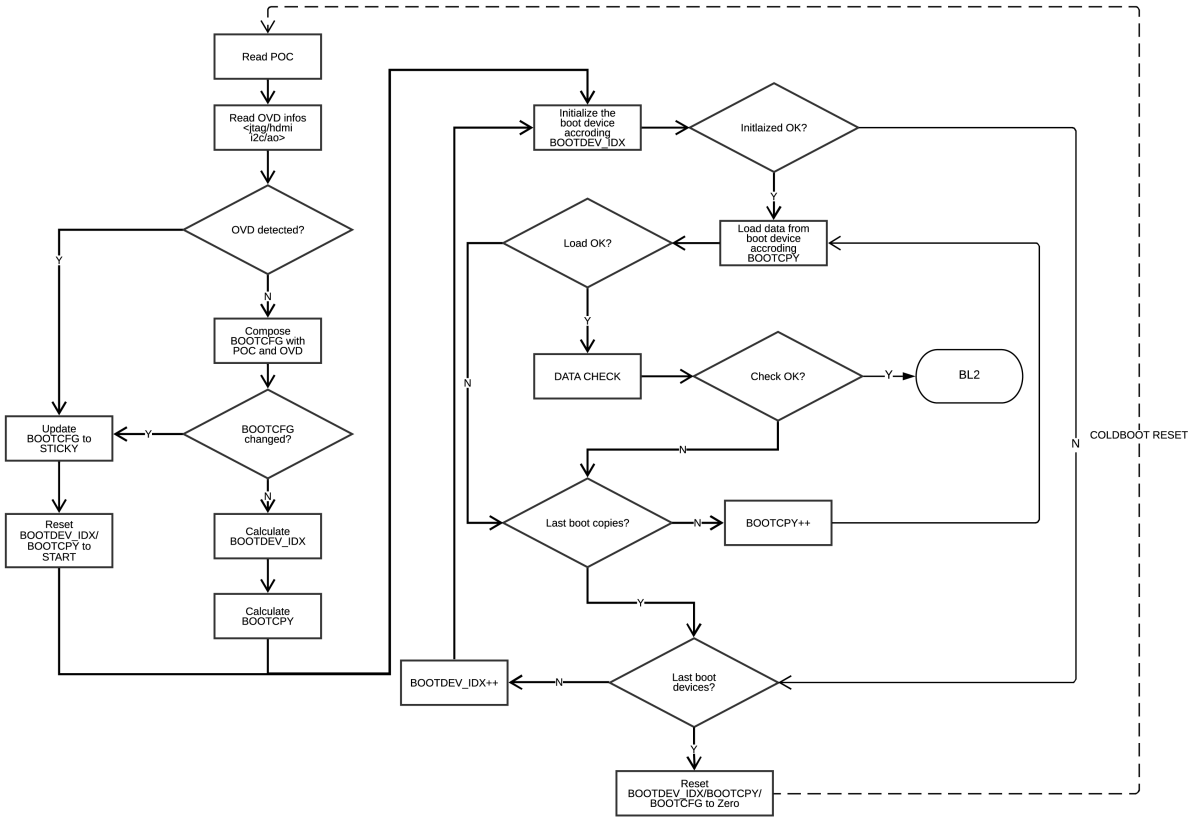

7.4 CPU

7.4.1 Overview

Cortex-A53

The Cortex™-A53 MP subsystem of the chip is a high-performance, low-power, ARM macro cell with an L1 cache subsystem and an L2 cache subsystem that provide full virtual memory capabilities. The Cortex-A53 processor implements the ARMv8 architecture and runs 32-bit ARM instructions and 64 bit ARMv8 instructions. The developers can follow the ARM official reference documents for programming details.

The Cortex-A53 processor features are:

- Pipeline in-order with dynamic branch prediction
- ARM, Thumb and ThumbEE instruction set support
- TrustZone security extensions
- Harvard level 1 memory system with a Memory Management Unit (MMU)
- 128-bit AXI master interface
- ARM CoreSight debug architecture
- Trace support through an Embedded Trace Macro cell (ETMv4) interface
- Intelligent Energy Manager (IEM) support with
  - Asynchronous AXI wrappers

Amlogic Proprietary and Confidential
Copyright © Amlogic. All rights reserved.

- Two voltage domains
- Media Processing Engine (MPE) with NEON technology
- Supports FPU

Cortex-A73

The quad core Cortex™-A73 processor is paired with A73 processor in a big.Little configuration, with each core has L1 instruction and data cache, together with a single shared L2 unified cache with A73. The developers can follow the ARM official reference documents for programming details.

The Cortex-A73 processor features are:

- Armv8-A Architecture
- 1-4x Symmetrical Multiprocessing (SMP) within a single processor cluster, and multiple coherent SMP processor clusters through AMBA 4 ACE technology
- AArch32 for full backward compatibility with Armv7
- AArch64 for 64-bit support and new architectural features
- TrustZone security technology
- NEON advanced SIMD
- DSP & SIMD extensions
- VFPv4 floating point
- trace support through CoreSight SoC-400 interface

7.4.2 Register Description

Register Address

For below registers, the base address is 0xfe00e000.

Each register final address = BASE + address * 4.

The following lists describe the mapping between each register and its address.

- CPUCTRL_SYS_A73_RESET_CNTL 0xfe00e100
- CPUCTRL_SYS_A73_CLK_CTRL0 0xfe00e104
- CPUCTRL_SYS_A73_CLK_CTRL1 0xfe00e108
- CPUCTRL_SYS_A73_CLK_CTRL2 0xfe00e10c
- CPUCTRL_SYS_CPU_RESET_CNTL 0xfe00e140
- CPUCTRL_SYS_CPU_CLK_CTRL0 0xfe00e144
- CPUCTRL_SYS_CPU_CLK_CTRL1 0xfe00e148
- CPUCTRL_SYS_CPU_CLK_RESULT 0xfe00e160
- CPUCTRL_ROM_DISABLE 0xfe00e180
- CPUCTRL_SYS_CPU_PERIPHBASE 0xfe00e200
- CPUCTRL_SYS_CPU_TARGETID 0xfe00e204
- CPUCTRL_SYS_CPU_POR_CFG0 0xfe00e240
- CPUCTRL_SYS_CPU_POR_CFG1 0xfe00e244
- CPUCTRL_SYS_CPU_CFG0 0xfe00e248
- CPUCTRL_SYS_CPU_CFG1 0xfe00e24c
- CPUCTRL_SYS_CPU_CFG2 0xfe00e250
- CPUCTRL_SYS_CPU_CFG3 0xfe00e254
- CPUCTRL_SYS_CPU_CFG4 0xfe00e258

Amlogic Proprietary and Confidential
Copyright © Amlogic. All rights reserved.

- CPUCTRL_SYS_CPU_CFG5 0xfe00e25c
- CPUCTRL_SYS_CPU_CFG6 0xfe00e260
- CPUCTRL_SYS_CPU_CFG7 0xfe00e264
- CPUCTRL_SYS_CPU_CFG8 0xfe00e268
- CPUCTRL_SYS_CPU_CFG9 0xfe00e26c
- CPUCTRL_SYS_CPU_STATUS0 0xfe00e280
- CPUCTRL_SYS_CPU_STATUS1 0xfe00e284
- CPUCTRL_SYS_CPU_STATUS2 0xfe00e288
- CPUCTRL_SYS_CPU_STATUS3 0xfe00e28c
- CPUCTRL_SYS_CPU_STATUS4 0xfe00e290
- CPUCTRL_SYS_CPU_STATUS5 0xfe00e294
- CPUCTRL_SYS_A73_PERIPHBASE 0xfe00e2c0
- CPUCTRL_SYS_A73_POR_CFG0 0xfe00e300
- CPUCTRL_SYS_A73_POR_CFG1 0xfe00e304
- CPUCTRL_SYS_A73_CFG0 0xfe00e308
- CPUCTRL_SYS_A73_CFG1 0xfe00e30c
- CPUCTRL_SYS_A73_CFG2 0xfe00e310
- CPUCTRL_SYS_A73_CFG3 0xfe00e314
- CPUCTRL_SYS_A73_CFG4 0xfe00e318
- CPUCTRL_SYS_A73_CFG5 0xfe00e31c
- CPUCTRL_SYS_A73_CFG6 0xfe00e320
- CPUCTRL_SYS_A73_CFG7 0xfe00e324
- CPUCTRL_SYS_A73_CFG8 0xfe00e328
- CPUCTRL_SYS_A73_CFG9 0xfe00e32c
- CPUCTRL_SYS_A73_STATUS0 0xfe00e340
- CPUCTRL_SYS_A73_STATUS1 0xfe00e344
- CPUCTRL_SYS_A73_STATUS2 0xfe00e348
- CPUCTRL_SYS_A73_STATUS3 0xfe00e34c
- CPUCTRL_SYS_A73_STATUS4 0xfe00e350
- CPUCTRL_SYS_A73_STATUS5 0xfe00e354

A53 CPU CTRL

Table 7-51 CPUCTRL_SYS_CPU_RESET_CNTL

Bit(s)	R/W	Default	Description
31:10	R	0x0	Reserved
9	R/W	0x0	nPRESETDBG soft reset source. 0x0: does not provide soft reset to nPRESETDBG 0x1: provide soft reset to nPRESETDBG
8	R/W	0x0	nL2RESET soft reset source 0x0: does not provide soft reset to nL2RESET 0x1: provide soft reset to nL2RESET

Amlogic Proprietary and Confidential
Copyright © Amlogic. All rights reserved.

Bit(s)	R/W	Default	Description
7:4	R/W	0x0	nCORERESET[3:0] soft reset source 0x0: does not provide soft reset to nCORERESET[3:0] 0x1: provide soft reset to nCORERESET[3:0]
3:0	R/W	0x0	nCPUPORESET[3:0] soft reset source 0x0: does not provide soft reset to nCPUPORESET[3:0] 0x1: provide soft reset to nCPUPORESET[3:0]

Figure 7-9 A53 Clock Source Selection and Divide Control

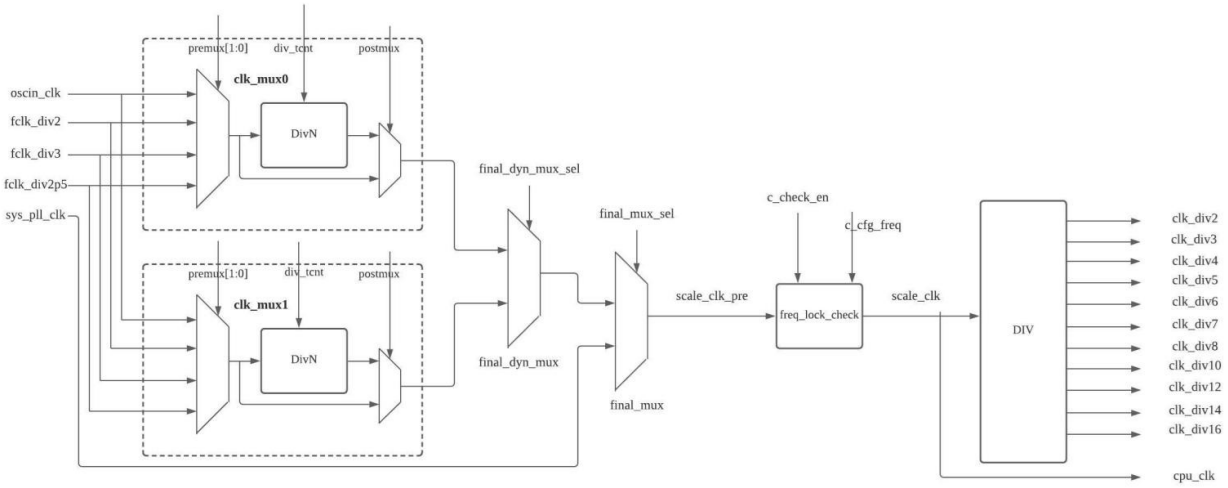

Table 7-52 CPUCTRL_SYS_CPU_CLK_CTRL0

This register controls A53 clock source selection and divide. Refer to the figure above for more details.

Bit(s)	R/W	Default	Description
31:28	R	0x0	Crt sys_cpu_clk_div status {final_mux_sel, final_dyn_mux, busy_cnt,busy}
27	R	0x0	Reserved
26	R/W	0x0	Cortex A53 sys_pll_div: crt_sys_cpu_clk_div clock muxing fsm dyn_enable signal
25:20	R/W	0x0	Clk_mux1: div_tcnt
18	R/W	0x0	Clk_mux1: premux
17:16	R/W	0x0	Clk_mux1: premux
15	R/W	0x0	Cortex A53 sys_pll_div: final mux: clock selection signal mode control. 0x0: use fsm dynamic mux signal to do clock selection. 0x1: directly use register bit[11] to do clock selection.
14	R/W	0x0	Cortex A53 sys_pll_div: Dynamic mux: clock selection signal mode control. 0x0: use fsm dynamic mux signal to do clock selection. 0x1: directly use register bit[10] to do clock selection.
13	R/W	0x0	Cortex A53 sys_pll_div: clk_mux0 clk_mux1 selection signal mode control. 0x0: use fsm dynamic mux signal to do clock selection. 0x1: directly use register bit to do clock selection.

Amlogic Proprietary and Confidential
Copyright © Amlogic. All rights reserved.

Bit(s)	R/W	Default	Description
			This bit affects the clock selection mode of clk_mux0 (pre_mux and post_mux) and clk_mux1(pre_mux and post_mux)
12	R/W	0x0	Cortex A53 sys_pll_div: crt_sys_cpu_clk_div clock muxing fsm force_update_t signal
11	R/W	0x0	Cortex A53 sys_pll_div: final mux selection signal: final_mux_sel
10	R/W	0x0	Cortex A53 sys_pll_div: dynamic mux clock selection signal: final_dyn_mux_sel
9:4	R/W	0x0	Clk_mux0: div_tcnt
3	R/W	0x0	Rev
2	R/W	0x0	Clk_mux0: postmux
1:0	R/W	0x0	Clk_mux0: premux

Figure 7-10 A53 Clocks Selection

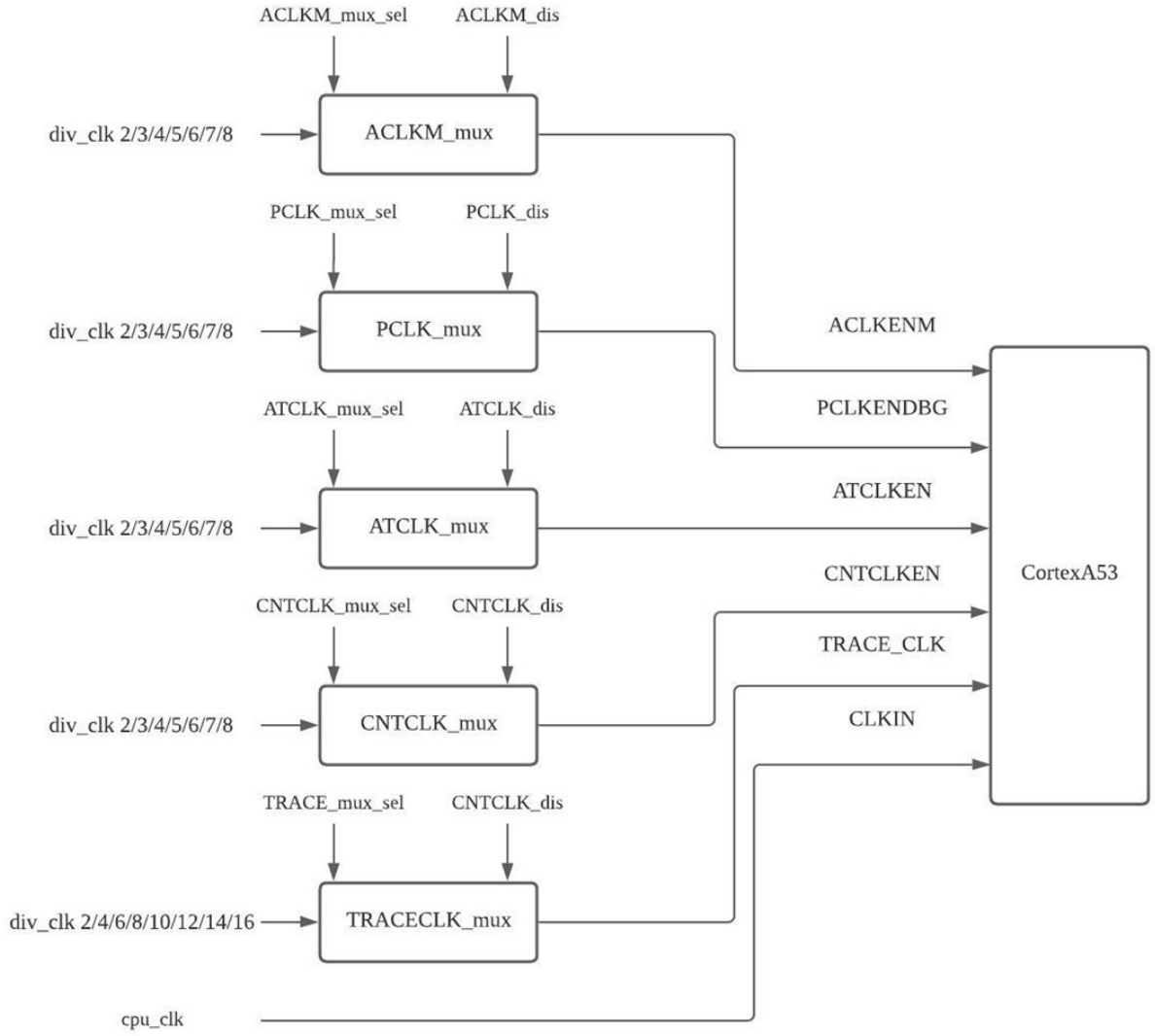

Amlogic Proprietary and Confidential
Copyright © Amlogic. All rights reserved.

Table 7-53 CPUCTRL_SYS_CPU_CLK_CTRL1

This register controls A53 clock selection. Refer to the figure above for more details.

Bit(s)	R/W	Default	Description
31:25	R/W	0x0	Reserved
24	R/W	0x0	Sys_pll_div16_en
23	R/W	0x0	A53 TPIU TRACECLK _dis: Set to 1 to manually disable the A53 TPIU trace_clk when changing the mux selection. Typically this bit is set to 0 since the clock muxes can switch without glithces. This is a “just in case” bit
22:20	R/W	0x5	A53 TPIU TRACECLK_mux_sel: 0x0: cpu clock divided by 2 0x1: cpu clock divided by 4 0x2: cpu clock divided by 6 0x3: cpu clock divided by 8 0x4: cpu clock divided by 10 0x5: cpu clock divided by 12 0x6: cpu clock divided by 14 0x7: cpu clock divided by 16
19	R/W	0	Timestamp CNTCLKEN_dis: Set to 1 to manually disable the Timestamp CNTCLK clock when changing the mux selection. Typically this bit is set to 0 since the clock muxes can switch without glithces. This is a “just in case” bit
18	R/W	0	ACLKM_dis: Set to 1 to manually disable the AXI clock when changing the mux selection. Typically this bit is set to 0 since the clock muxes can switch without glithces. This is a “just in case” bit
17	R/W	0	ATCLK_dis Set to 1 to manually disable the ATB clock when changing the mux selection. Typically this bit is set to 0 since the clock muxes can switch without glithces. This is a “just in case” bit
16	R/W	0	PCLK_dis: Set to 1 to manually disable the APB clock when changing the mux selection. Typically this bit is set to 0 since the clock muxes can switch without glithces. This is a “just in case” bit
15	R/W	0	Timestamp CNTCLK enable: 0x0: disable 0x1: enable
14:12	R/W	0x0	Timestamp CNTCLK_mux_sel: 0x0: cpu clock divided by 2 0x1: cpu clock divided by 3 0x2: cpu clock divided by 4 0x3: cpu clock divided by 5 0x4: cpu clock divided by 6 0x5: cpu clock divided by 7 0x6: cpu clock divided by 8 0x7: no clock
11:9	R/W	0x1	ACLKM_mux_sel: 0x0: cpu clock divided by 2 0x1: cpu clock divided by 3 0x2: cpu clock divided by 4 0x3: cpu clock divided by 5 0x4: cpu clock divided by 6 0x5: cpu clock divided by 7 0x6: cpu clock divided by 8 0x7: no clock
8:6	R/W	0x2	ATCLK_mux_sel: 0x0: cpu clock divided by 2 0x1: cpu clock divided by 3 0x2: cpu clock divided by 4 0x3: cpu clock divided by 5 0x4: cpu clock divided by 6 0x5: cpu clock divided by 7

Amlogic Proprietary and Confidential
Copyright © Amlogic. All rights reserved.

Bit(s)	R/W	Default	Description
			0x6: cpu clock divided by 8 0x7: no clock
5:3	R/W	0x4	PCLK_mux_sel: 0x0: cpu clock divided by 2 0x1: cpu clock divided by 3 0x2: cpu clock divided by 4 0x3: cpu clock divided by 5 0x4: cpu clock divided by 6 0x5: cpu clock divided by 7 0x6: cpu clock divided by 8 0x7: no clock
2	R/W	0x0	Soft reset to the clock divide logic. 0x0: no soft reset 0x1: soft reset clock divide logic
1	R/W	0x0	Sys_cpu_clk_div16_en 0x0: disable 0x1: enable
0	R/W	0x0	DEBUG APB PCLK enable 0x0: disable 0x1: enable

Table 7-54 CPUCTRL_SYS_CPU_CLK_RESULT

Bit(s)	R/W	Default	Description
31:2	R	0x0	Reserved
1	R	0	Cortex A73 cpu clk result
0	R	0	Cortex A53 cpu clk result

Table 7-55 CPUCTRL_ROM_DISABLE

Bit(s)	R/W	Default	Description
15-8	R/W	0xA5	can write only when value is 0xA5 if write to any value except 0xA5, will disable ROM MMU access.
7-0	R/W	0xA5	can write only when value is 0xA5 if write to any value except 0xA5, will disable ROM MAIN access.

Table 7-56 CPUCTRL_SYS_CPU_POR_CFG0

Bit(s)	R/W	Default	Description
31-29	R	0x0	Reserved
28	R/W	0x0	MBISTREQ
27:24	R	0x0	Reserved
23:20	R/W	0x0	CRYPTODISABLE[3:0] Disable the Cryptography Extensions. This pin is sampled only during reset of the processor.
19:16	R/W	0x0	CP15SDISABLE[3:0] Disable write access to some secure CP15 registers.
15:12	R/W	0x0	VINITHI[3:0]

Amlogic Proprietary and Confidential
Copyright © Amlogic. All rights reserved.

Bit(s)	R/W	Default	Description
			Location of the exception vectors at reset. It sets the initial value of the V bit in the CP15 SCTLR register: 0 Exception vectors start at address 0x00000000. 1 Exception vectors start at address 0xFFFF0000. This pin is sampled only during reset of the processor.
11:9	R	0x0	Reserved
8	R/W	0x0	DBGL1RSTDISABLE Disable L1 data cache automatic invalidate on reset functionality: 0 Enable automatic invalidation of L1 data cache on reset. 1 Disable automatic invalidation of L1 data cache on reset. This pin is sampled only during reset of the processor.
7	R/W	0x0	BROADCASTINNER Enable broadcasting of Inner Shareable transactions: 0 Inner Shareable transactions are not broadcast externally. 1 Inner Shareable transactions are broadcast externally. If BROADCASTINNER is tied HIGH, you must also tie BROADCASTOUTER HIGH. This pin is sampled only during reset of the Cortex-A53 processor.
6	R/W	0x0	BROADCASTOUTER Enable broadcasting of outer shareable transactions: 0 Outer Shareable transactions are not broadcast externally. 1 Outer Shareable transactions are broadcast externally. This pin is sampled only during reset of the Cortex-A53 processor.
5	R/W	0x0	BROADCASTCACHEMAINT Enable broadcasting of cache maintenance operations to downstream caches: 0 Cache maintenance operations are not broadcast to downstream caches. 1 Cache maintenance operations are broadcast to downstream caches. This pin is sampled only during reset of the Cortex-A53 processor.
4	R/W	0x0	L2RSTDISABLE Disable automatic L2 cache invalidate at reset: 0 Hardware resets L2 cache. 1 Hardware does not reset L2 cache.
3:0	R/W	0x0	CFGEND[3:0] Endianness configuration at reset. It sets the initial value of the EE bits in the CP15 SCTLR_EL3 and SCTR_S registers: 0 EE bit is LOW. 1 EE bit is HIGH. This pin is sampled only during reset of the processor.

Table 7-57 CPUCTRL_SYS_CPU_POR_CFG1

Bit(s)	R/W	Default	Description
31:11	R	0x1FFF-FF	Reserved
10	R/W	0x1	ACINACTM Snoop interface is inactive and not participating in coherency: 0 Snoop interface is active. 1 Snoop interface is inactive.
9	R/W	0x0	SYSBARDISABLE Disable broadcasting of barriers onto the system bus: 0 Barriers are broadcast onto the system bus. This requires an AMBA4 ACE, or AMBA5 CHI, interconnect. 1 Barriers are not broadcast onto the system bus. This is compatible with an AXI3 interconnect and most AMBA4 interconnects.a This pin is sampled only during reset of the Cortex-A53 processor.

Amlogic Proprietary and Confidential
Copyright © Amlogic. All rights reserved.

Bit(s)	R/W	Default	Description
8	R/W	0x1	GICCDISABLE Globally disables the GIC CPU interface logic and routes the “External” signals directly to the processor: 0 Enable the GIC CPU interface logic. 1 Disable the GIC CPU interface logic and route the legacy nIRQ, nFIQ, nVIRQ, and nVFIQ signals directly to the processor. Drive this signal HIGH when using a legacy interrupt controller such as GIC-400 which does not support GICv3 or GICv4.
7:4	R/W	0xF	AA64nAA32[3:0] Register width state: 0 AArch32. 1 AArch64. This pin is sampled only during reset of the processor.
3:0	R/W	0xF	CFGTE[3:0] Enable T32 exceptions. It sets the initial value of the TE bit in the CP15 SCTLR register: 0 TE bit is LOW. 1 TE bit is HIGH. This pin is sampled only during reset of the processor.

Table 7-58 CPUCTRL_SYS_CPU_CFG0

Bit(s)	R/W	Default	Description
31:24	R/W	0x0	CLUSTERIDAFF2[7:0] Value read in the Cluster ID Affinity Level 2 field, MPIDR bits[23:16], of the CP15 MPIDR register. These pins are sampled only during reset of the processor.
23:16	R/W	0x0	CLUSTERIDAFF1[7:0] Value read in the Cluster ID Affinity Level 1 field, MPIDR bits[15:8], of the CP15 MPIDR register. These pins are sampled only during reset of the processor.
15:4	R	0x0	Reserved
3:0	R/W	0x0	DBGEN[3:0] Invasive debug enable: 0 Not enabled. 1 Enabled.

Table 7-59 CPUCTRL_SYS_CPU_CFG1

Bit(s)	R/W	Default	Description
31:21	R/W	0x0	Reserved
20	R/W	0x0	DBGROMADDRV Debug ROM base address valid. If the debug ROM address cannot be determined, tie this signal LOW. This pin is sampled only during reset of the processor.
19:0	R/W	0x0	DBGROMADDR[31:12] Debug ROM base address. Specifies bits[39:12] of the ROM table physical address. If the address cannot be determined, tie this signal LOW. This pin is sampled only during reset of the processor.

Amlogic Proprietary and Confidential
Copyright © Amlogic. All rights reserved.

Table 7-60 CPUCTRL_SYS_CPU_CFG2

Bit(s)	R/W	Default	Description
31:2	R/W	0x3FFF_8000	RVBARADDR0[31:2] Core 0 Reset Vector Base Address for executing in 64-bit state. These pins are sampled only during reset of the processor.
1:0	R	0x0	Reserved

Table 7-61 CPUCTRL_SYS_CPU_CFG3

Bit(s)	R/W	Default	Description
31:2	R/W	0x3FFF_8000	RVBARADDR1[31:2] Core 1 Reset Vector Base Address for executing in 64-bit state. These pins are sampled only during reset of the processor.
1:0	R	0x0	Reserved

Table 7-62 CPUCTRL_SYS_CPU_CFG4

Bit(s)	R/W	Default	Description
31:2	R/W	0x3FFF_8000	RVBARADDR2[31:2] Core 2 Reset Vector Base Address for executing in 64-bit state. These pins are sampled only during reset of the processor.
1:0	R	0x0	Reserved

Table 7-63 CPUCTRL_SYS_CPU_CFG5

Bit(s)	R/W	Default	Description
31:2	R/W	0x3FFF_8000	RVBARADDR3[31:2] Core 3 Reset Vector Base Address for executing in 64-bit state. These pins are sampled only during reset of the processor.
1:0	R	0x0	Reserved

Table 7-64 CPUCTRL_SYS_CPU_CFG6

Bit(s)	R/W	Default	Description
31:16	R/W	0x0	ICDTDATA[15:0] AXI4 Stream Protocol signal. Distributor to GIC CPU Interface messages. TDATA is the primary payload that is used to provide the data that is passing across the interface.
15	R/W	0x0	ICCTREADY AXI4 Stream Protocol signal. Distributor to GIC CPU Interface messages. TREADY indicates that the slave can accept a transfer in the current cycle.
14:13	R/W	0x0	ICDTDEST[1:0] AXI4 Stream Protocol signal. Distributor to GIC CPU Interface messages. TDEST provides routing information for the data stream.
12	R/W	0x0	ICDTLAST AXI4 Stream Protocol signal. Distributor to GIC CPU Interface messages. TLAST

Amlogic Proprietary and Confidential
Copyright © Amlogic. All rights reserved.

Bit(s)	R/W	Default	Description
			indicates the boundary of a packet.
11	R/W	0x0	ICDTVALID AXI4 Stream Protocol signal. Distributor to GIC CPU Interface messages. TVALID indicates that the master is driving a valid transfer.
10	R/W	0x0	L2FLUSHREQ L2 hardware flush request.
9	R/W	0x0	EVENTI Event input for processor wake-up from WFE state.
8	R/W	0x0	CLREXMONREQ Clearing of the external global exclusive monitor request. When this signal is asserted, it acts as a WFE wake-up event to all the cores in the MPCore device.
7:4	R	0x0	Reserved
3:0	R/W	0x0	EDBGRQ[3:0] External debug request: 0 No external debug request. 1 External debug request. The processor treats the EDBGRQ input as level-sensitive. The EDBGRQ input must be asserted until the processor asserts DBGACK.

Table 7-65 CPUCTRL_SYS_CPU_CFG7

Bit(s)	R/W	Default	Description
31:26	R	0	Reserved
25	R/W	0x1	CNTVALUEB selection 0x0:select CNTVLAUEB from timestamp unit 0x1:select CNTVLAUEB from internal counter
24	R/W	0x1	L2QREQn Indicates that the power controller is ready to enter or exit retention for the L2 data RAMs
23:20	R/W	0xf	NEONQREQn[3:0] Indicates that the power controller is ready to enter or exit retention for the referenced Advanced SIMD and Floating-point block
19:16	R/W	0xF	DBGPWRDUP[3:0] Core powered up 0 Core is powered down. 1 Core is powered up.
15:12	R/W	0xf	CPUQREQn[3:0] Indicates that the power controller is ready to enter or exit retention for the referenced core
11:8	R/W	0xf	nSEI[3:0] System Error Interrupt request. Active-LOW, edge sensitive: 0 Activate SEI request. 1 Do not activate SEI request. Asserting the nSEI input causes one of the following to occur: • Asynchronous Data Abort, if taken to AArch32. The DFSR.FS field is set to indicate an Asynchronous External Abort. • SError interrupt, if taken to AArch64.

Amlogic Proprietary and Confidential
Copyright © Amlogic. All rights reserved.

Bit(s)	R/W	Default	Description
7:4	R/W	0xf	nVSEI[3:0] Virtual FIQ request. Active-LOW, level sensitive, asynchronous FIQ interrupt request: 0 Activate FIQ interrupt. 1 Do not activate FIQ interrupt. The processor treats the nVFIQ input as level-sensitive. The nVFIQ input must be asserted until the processor acknowledges the interrupt. If the GIC is enabled by tying the GICCDISABLE input pin LOW, the nVFIQ input pin must be tied off to HIGH. If the GIC is disabled by tying the GICCDISABLE input pin HIGH, the nVFIQ input pin can be driven by an external GIC in the SoC.
3:0	R/W	0xf	nREI[3:0] RAM Error Interrupt request. Active-LOW, edge sensitive: 0 Activate REI request. Reports an asynchronous RAM error in the system. 1 Do not activate REI request. Asserting the nREI input causes one of the following to occur: • Asynchronous Data Abort, if taken to AArch32. The DFSR.FS field is set to indicate an Asynchronous parity error on memory access. • SError interrupt, if taken to AArch64.

Table 7-66 CPUCTRL_SYS_CPU_CFG8

Bit(s)	R/W	Default	Description
31	R/W	0x0	Coresight DAP component debug power up ack signal source selection: 0x0: use DAP debug power up request as system ack signal to DAP. 0x1: use bit[11] or bit[12] as the debug power up ack signal.
30	R/W	0x0	Coresight DAP component system power up ack signal source selection: 0x0: use DAP system power up request as system ack signal to DAP. 0x1: use bit[11] or bit[12] as the system power up ack signal.
29:13	R	0x0	Reserved
12	R/W	0x0	Connects to Coresight DAP component Power Controller Interface System power on request ack for csyspwrup
11	R/W	0x0	Connects Coresight DAP component Power Controller Interface Debug power on request ack for cdbgpwrup
10	R/W	0x0	Coresight DAP component JTAG ntrst. Normally JTAG trst comes from chip reset not from internally registers.
9:8	R	0x0	Reserved
7:4	R/W	0x0	Coresight DAP component instanceid If multiple serial wire targets with the same target ID might share a connection, instanceid must be driven differently for each target. Drive a unique value on this input if the system contains multiple SWJ-DPs.In other cases, you must tie this input LOW.
3	R/W	0x0	Coresight DAP component debug reset cdbgrst
2	R/W	0x0	Coresight TPIU component tpctl tie-off signal. If tracectl is not connected then this input must be tied LOW. ARM recommends that you do not connect tracectl, and you tie tpctl LOW, unless you must support a legacy Trace Port Adaptor that cannot support formatter operation in continuous mode.
1:0	R	0x0	Reserved

Amlogic Proprietary and Confidential
Copyright © Amlogic. All rights reserved.

Table 7-67 CPUCTRL_SYS_CPU_CFG9

Bit(s)	R/W	Default	Description
31:28	R/W	0xf	Coretex A53 CTI Interrupt ack CTIIRQACK[3:0]
27:14	R/W	0x3fff	Reserved
13:10	R/W	0x0	Coretex A53 channel interface H/S bypass CIHSBYPASS[3:0]
9	R/W	0x1	Coretex A53 channel interface bypass CISBYPASS
8	R/W	0x1	Coresight Debug APB clock enable
7	R/W	0x1	Coresight DAP APB-AP tie off signals. If the APB-AP is connected to a debug bus, you must tie device HIGH
6	R/W	0x1	Drives Coresight CTI component niden Non-Invasive debug enable
5	R/W	0x1	Drives Coresight CTI component dbgen Invasive debug enable
4:0	R/W	0x0f	Coresight TPIU tie off signals. Indicates how many pins of tracedata[31:0] are connected to pins of the soc. 0xf means 16bits.

Table 7-68 CPUCTRL_SYS_CPU_STATUS0

Bit(s)	R/W	Default	Description
31:27	R	0x0	Reserved
26	R	0x0	L2FLUSHDONE L2 hardware flush complete.
25	R	0x0	STANDBYWFIL2 Indicates whether the L2 memory system is in WFI low-power state. This signal is active when the following conditions are met: • All cores are in WFI low-power state, held in reset, or nL2RESET is asserted LOW. • In an ACE configuration, ACINACTM is asserted HIGH. • In a CHI configuration, SINACT is asserted HIGH. • If ACP has been configured, AINACTS is asserted HIGH. • L2 memory system is idle.
24:21	R	0x0	STANDBYWFE[3:0] Indicates whether a core is in WFE low-power state: 0x0 Core not in WFE low-power state. 0x1 Core in WFE low-power state
20:17	R	0x0	STANDBYWFI[3:0] Indicates whether a core is in WFI low-power state: 0x0 Core not in WFI low-power state. 0x1 Core in WFI low-power state. This is the reset condition
16	R	0x0	EXTERRIRQ Error indicator for AXI or CHI transactions with a write response error condition. 0x1 interrupt. 0x0 No interrupt.
15:12	R	0x0	CTIIRQ[3:0] CTI interrupt (active-HIGH). 0x1 interrupt. 0x0 No interrupt.
11:8	R	0x0	VCPUMNTIRQ

Amlogic Proprietary and Confidential
Copyright © Amlogic. All rights reserved.

Bit(s)	R/W	Default	Description
			Virtual CPU interface maintenance interrupt PPI output. 0x1 interrupt. 0x0 No interrupt.
7:4	R	0x0	COMMIRQ[3:0] Communications channel receive or transmit interrupt request. 0x1 interrupt. 0x0 No interrupt.
3:0	R	0x0	PMUIRQ[3:0] PMU interrupt request. 0x1 interrupt. 0x0 No interrupt.

Table 7-69 CPUCTRL_SYS_CPU_STATUS1

Bit(s)	R/W	Default	Description
31:28	R	0x0	DBGNOPWRDWN[3:0] Core no powerdown request 0 Do not request that the core stays powered up. 1 Request that the core stays powered up.
27:24	R	0x0	DBGACK[3:0] Debug acknowledge: 0 External debug request not acknowledged. 1 External debug request acknowledged.
23:20	R	0xf	COMMTX[3:0] Communication transmit channel. Transmit portion of Data Transfer Register empty flag: 0 Full. 1 Empty.
19:16	R	0x0	COMMRX[3:0] Communications channel receive. Receive portion of Data Transfer Register full flag: 0 Empty. 1 Full.
15	R	0x0	Coresight DAP system power up request
14	R	0x0	Coresight DAP debug reset request
13	R	0x0	Coresight timstamp tsforcesync Re-synchronize event indicator. This signal indicates an event that requires all the receivers to re-synchronize to the new tsvalue
12	R	0x0	Coresight DAP component debug power up request. cpwrupreq_cdbgpwrup
11:8	R	0x0	DBGPWRUPREQ[3:0] Core power up request: 0 Do not request that the core is powered up. 1 Request that the core is powered up.
7:4	R	0x0	DBGRSTREQ[3:0] Warm reset request.
3:0	R	0x0	WARMRSTREQ[3:0] Processor warm reset request 0 Do not apply warm reset. 1 Apply warm reset.

Amlogic Proprietary and Confidential
Copyright © Amlogic. All rights reserved.

Table 7-70 CPUCTRL_SYS_CPU_STATUS2

Bit(s)	R/W	Default	Description
31:16	R/W		
15:8	R/W		RDMEMATTR[7:0] Read request memory attributes.
7:0	R/W		WRMEMATTR[7:0] Write request memory attributes.

Table 7-71 CPUCTRL_SYS_CPU_STATUS3

Bit(s)	R/W	Default	Description
31:0	R/W	0	Reserved

Table 7-72 CPUCTRL_SYS_CPU_STATUS4

Bit(s)	R/W	Default	Description
31:7	R	0x0	Reserved
6	R	0x0	CLREXMONACK Clearing of the external global exclusive monitor acknowledge.
5	R	0x0	EVENT0 Event output. Active when a SEV instruction is executed
4	R	0x0	Reserved
3:0	R	0x0	SMPEN[3:0] Indicates whether a core is taking part in coherency.

Table 7-73 CPUCTRL_SYS_CPU_STATUS5

Bit(s)	R/W	Default	Description
31:27	R		Reserved
26:23	R		CPUQACTIVE[3:0] Indicates whether the referenced core is active.
22:19	R		CPUQDENY[3:0] Indicates that the referenced core denies the power controller retention request.
18:15	R		CPUQACCEPTn[3:0] Indicates that the referenced core accepts the power controller retention request.
14:11	R		NEONQACTIVE[3:0] Indicates whether the referenced Advanced SIMD and Floating-point block is active.
10:7	R		NEONQDENY[3:0] Indicates that the referenced Advanced SIMD and Floating-point block denies the power controller retention request.
6:3	R		NEONQACCEPTn[3:0] Indicates that the referenced Advanced SIMD and Floating-point block accepts the power controller retention request.
2	R		L2QACTIVE Indicates that the L2 data RAMs accept the power controller retention request.

Amlogic Proprietary and Confidential
Copyright © Amlogic. All rights reserved.

Bit(s)	R/W	Default	Description
1	R		L2QDENY Indicates that the L2 data RAMs deny the power controller retention request.
0	R		L2QACCEPTn Indicates that the L2 data RAMs accept the power controller retention request.

A73 CPU CTRL

Table 7-74 CPUCTRL_SYS_A73_RESET_CNTL0

Bit(s)	R/W	Default	Description
31:10	R	0x0	Reserved
9	R/W	0x0	nPRESETDBG soft reset source. 0x0: does not provide soft reset to nPRESETDBG 0x1: provide soft reset to nPRESETDBG
8	R/W	0x0	nL2RESET soft reset source 0x0: does not provide soft reset to nL2RESET 0x1: provide soft reset to nL2RESET
7:4	R/W	0x0	nCORERESET[3:0] soft reset source 0x0: does not provide soft reset to nCORERESET[3:0] 0x1: provide soft reset to nCORERESET[3:0]
3:0	R/W	0x0	nCPUPORESET[3:0] soft reset source 0x0: does not provide soft reset to nCPUPORESET[3:0] 0x1: provide soft reset to nCPUPORESET[3:0]

Table 7-75 CPUCTRL_SYS_A73_CLK_CTRL0

Bit(s)	R/W	Default	Description
31:28	R	0x0	Crt sys_cpu_clk_div status {final_mux_sel, final_dyn_mux, busy_cnt,busy}
27	R	0x0	Reserved
26	R/W	0x0	Cortex 73 sys_pll_div: crt_sys_cpu_clk_div clock muxing fsm dyn_enable signal
25:20	R/W	0x0	Clk_mux1: div_tcnt
18	R/W	0x0	Clk_mux1: premux
17:16	R/W	0x0	Clk_mux1: premux
15	R/W	0x0	Cortex A73 sys_pll_div: final mux: clock selection signal mode control. 0x0: use fsm dynamic mux signal to do clock selection. 0x1: directly use register bit[11] to do clock selection.
14	R/W	0x0	Cortex A73 sys_pll_div: Dynamic mux: clock selection signal mode control. 0x0: use fsm dynamic mux signal to do clock selection. 0x1: directly use register bit[10] to do clock selection.
13	R/W	0x0	Cortex A73 sys_pll_div: clk_mux0 clk_mux1 selection signal mode control. 0x0: use fsm dynamic mux signal to do clock selection. 0x1: directly use register bit to do clock selection. This bit affects the clock selection mode of clk_mux0 (pre_mux and post_mux) and clk_mux1(pre_mux and post_mux)
12	R/W	0x0	Cortex A73 sys_pll_div: crt_sys_cpu_clk_div clock muxing fsm force_update_t signal
11	R/W	0x0	Cortex A73 sys_pll_div: final mux selection signal: final_mux_sel

Amlogic Proprietary and Confidential
Copyright © Amlogic. All rights reserved.

Bit(s)	R/W	Default	Description
10	R/W	0x0	Cortex A73 sys_pll_div: dynamic mux clock selection signal: final_dyn_mux_sel
9:4	R/W	0x0	Clk_mux0: div_tcnt
3	R/W	0x0	Rev
2	R/W	0x0	Clk_mux0: postmux
1:0	R/W	0x0	Clk_mux0: premux

Table 7-76 CPUCTRL_SYS_A73_CLK_CTRL1

This register controls A53 clock selection. Refer to Figure 7-10 for more details.

Bit(s)	R/W	Default	Description
31:25	R/W	0x0	Reserved
24	R/W	0x0	Sys_pll_div16_en
23	R/W	0x0	A73 TPIU TRACECLK _dis: Set to 1 to manually disable the A53 TPIU trace_clk when changing the mux selection. Typically this bit is set to 0 since the clock muxes can switch without glithces. This is a “just in case” bit
22:20	R/W	0x5	A73 TPIU TRACECLK_mux_sel: 0x0: cpu clock divided by 2 0x1: cpu clock divided by 4 0x2: cpu clock divided by 6 0x3: cpu clock divided by 8 0x4: cpu clock divided by 10 0x5: cpu clock divided by 12 0x6: cpu clock divided by 14 0x7: cpu clock divided by 16
19	R/W	0	Timestamp CNTCLKEN_dis: Set to 1 to manually disable the Timestamp CNTCLK clock when changing the mux selection. Typically this bit is set to 0 since the clock muxes can switch without glithces. This is a “just in case” bit
18	R/W	0	ACLKM_dis: Set to 1 to manually disable the AXI clock when changing the mux selection. Typically this bit is set to 0 since the clock muxes can switch without glithces. This is a “just in case” bit
17	R/W	0	ATCLK_dis Set to 1 to manually disable the ATB clock when changing the mux selection. Typically this bit is set to 0 since the clock muxes can switch without glithces. This is a “just in case” bit
16	R/W	0	PCLK_dis: Set to 1 to manually disable the APB clock when changing the mux selection. Typically this bit is set to 0 since the clock muxes can switch without glithces. This is a “just in case” bit
15	R/W	0	Timestamp CNTCLK enable: 0x0: disable 0x1: enable
14:12	R/W	0x0	Timestamp CNTCLK_mux_sel: 0x0: cpu clock divided by 2 0x1: cpu clock divided by 3 0x2: cpu clock divided by 4 0x3: cpu clock divided by 5 0x4: cpu clock divided by 6 0x5: cpu clock divided by 7 0x6: cpu clock divided by 8 0x7: no clock
11:9	R/W	0x1	ACLKM_mux_sel: 0x0: cpu clock divided by 2 0x1: cpu clock divided by 3

Amlogic Proprietary and Confidential
Copyright © Amlogic. All rights reserved.

Bit(s)	R/W	Default	Description
			0x2: cpu clock divided by 4 0x3: cpu clock divided by 5 0x4: cpu clock divided by 6 0x5: cpu clock divided by 7 0x6: cpu clock divided by 8 0x7: no clock
8:6	R/W	0x2	ATCLK_mux_sel: 0x0: cpu clock divided by 2 0x1: cpu clock divided by 3 0x2: cpu clock divided by 4 0x3: cpu clock divided by 5 0x4: cpu clock divided by 6 0x5: cpu clock divided by 7 0x6: cpu clock divided by 8 0x7: no clock
5:3	R/W	0x4	PCLK_mux_sel: 0x0: cpu clock divided by 2 0x1: cpu clock divided by 3 0x2: cpu clock divided by 4 0x3: cpu clock divided by 5 0x4: cpu clock divided by 6 0x5: cpu clock divided by 7 0x6: cpu clock divided by 8 0x7: no clock
2	R/W	0x0	Soft reset to the clock divide logic. 0x0: no soft reset 0x1: soft reset clock divide logic
1	R/W	0x0	Sys_cpu_clk_div16_en 0x0: disable 0x1: enable
0	R/W	0x0	DEBUG APB PCLK enable 0x0: disable 0x1: enable

Table 7-77 CPUCTRL_SYS_A73_CLK_CTRL2

Bit(s)	R/W	Default	Description
31:16	R/W	0x0	Reserved
15	R/W	0x0	Core3 CORECLKEN[3] force to 1. Which means divide by 1 of cpu clock
14	R/W	0x0	Core3 CORECLKEN[3] clock disable Set to 1 to manually disable clock when changing the mux selection. Typically this bit is set to 0 since the clock muxes can switch without glithces. This is a “just in case” bit
13:12	R/W	0x0	Core3 CORECLKEN[3] clk_mux: 0x0: cpu clock divided by 1 0x1: cpu clock divided by 2 0x2: cpu clock divided by 3 0x3: cpu clock divided by 4 0x4,0x5,0x6,0x7: no clock
11	R/W	0x0	Core2 CORECLKEN[2] force to 1. Which means divide by 1 of cpu clock
10	R/W	0x0	Core2 CORECLKEN[2] clock disable Set to 1 to manually disable clock when changing the mux selection. Typically this bit is set to 0 since the clock muxes can switch without glithces. This is a “just in case” bit
9:8	R/W	0x0	Core2 CORECLKEN[2] clk_mux: 0x0: cpu clock divided by 1

Amlogic Proprietary and Confidential
Copyright © Amlogic. All rights reserved.

Bit(s)	R/W	Default	Description
			0x1: cpu clock divided by 2 0x2: cpu clock divided by 3 0x3: cpu clock divided by 4 0x4,0x5,0x6,0x7: no clock
7	R/W	0x0	Core1 CORECLKEN[1] force to 1. Which means divide by 1 of cpu clock
6	R/W	0x0	Core1 CORECLKEN[1] clock disable Set to 1 to manually disable clock when changing the mux selection. Typically this bit is set to 0 since the clock muxes can switch without glithces. This is a “just in case” bit
5:4	R/W	0x0	Core1 CORECLKEN[1] clk_mux: 0x0: cpu clock divided by 1 0x1: cpu clock divided by 2 0x2: cpu clock divided by 3 0x3: cpu clock divided by 4 0x4,0x5,0x6,0x7: no clock
3	R/W	0x0	Core0 CORECLKEN[0] force to 1. Which means divide by 1 of cpu clock
2	R/W	0x0	Core0 CORECLKEN[0] clock disable Set to 1 to manually disable clock when changing the mux selection. Typically this bit is set to 0 since the clock muxes can switch without glithces. This is a “just in case” bit
1:0	R/W	0x0	Core0 CORECLKEN[0] clk_mux: 0x0: cpu clock divided by 1 0x1: cpu clock divided by 2 0x2: cpu clock divided by 3 0x3: cpu clock divided by 4 0x4,0x5,0x6,0x7: no clock

Table 7-78 CPUCTRL_SYS_A73_POR_CFG0

Bit(s)	R/W	Default	Description
31-29	R	0x0	Reserved
28	R/W	0x0	MBISTREQ
27:20	R	0x0	Reserved
19:16	R/W	0x0	CRYPTODISABLE[3:0] Disable the Cryptography Extensions. This pin is sampled only during reset of the processor.
15:12	R/W	0x0	VINITHI[3:0] Location of the exception vectors at reset. It sets the initial value of the V bit in the CP15 SCTLR register: 0 Exception vectors start at address 0x00000000. 1 Exception vectors start at address 0xFFFF0000. This pin is sampled only during reset of the processor.
11:10	R	0x0	Reserved
9	R/W	0x0	Enable broadcasting of cache maintenance operations to downstream caches: 0x0 Cache maintenance operations are not broadcast to downstream caches. 0x1 Cache maintenance operations are broadcast to downstream caches. This pin is sampled only during reset of the Cortex-A73 processor. In a bigLITTLE system with Cortex-A73, this pin must be tied to 0 because Cortex-A73 does not support this feature.
8	R/W	0x0	DBGL1RSTDISABLE Disable L1 data cache automatic invalidate on reset functionality: 0 Enable automatic invalidation of L1 data cache on reset. 1 Disable automatic invalidation of L1 data cache on reset. This pin is sampled only during reset of the processor.

Amlogic Proprietary and Confidential
Copyright © Amlogic. All rights reserved.

Bit(s)	R/W	Default	Description
7	R/W	0x0	BROADCASTINNER Enable broadcasting of Inner Shareable transactions: 0 Inner Shareable transactions are not broadcast externally. 1 Inner Shareable transactions are broadcast externally. If BROADCASTINNER is tied HIGH, you must also tie BROADCASTOUTER HIGH. This pin is sampled only during reset of the Cortex-A53 processor.
6	R/W	0x0	BROADCASTOUTER Enable broadcasting of outer shareable transactions: 0 Outer Shareable transactions are not broadcast externally. 1 Outer Shareable transactions are broadcast externally. This pin is sampled only during reset of the Cortex-A53 processor.
5	R/W	0x0	BROADCASTCACHEMAINT Enable broadcasting of cache maintenance operations to downstream caches: 0 Cache maintenance operations are not broadcast to downstream caches. 1 Cache maintenance operations are broadcast to downstream caches. This pin is sampled only during reset of the Cortex-A53 processor.
4	R/W	0x0	L2RSTDISABLE Disable automatic L2 cache invalidate at reset: 0 Hardware resets L2 cache. 1 Hardware does not reset L2 cache.
3:0	R/W	0x0	CFGEND[3:0] Endianness configuration at reset. It sets the initial value of the EE bits in the CP15 SCTLR_EL3 and SCTR_S registers: 0 EE bit is LOW. 1 EE bit is HIGH. This pin is sampled only during reset of the processor.

Table 7-79 CPUCTRL_SYS_A73_POR_CFG1

Bit(s)	R/W	Default	Description
31:11	R	0x1FFF-FF	Reserved
10	R/W	0x1	ACINACTM Snoop interface is inactive and not participating in coherency: 0 Snoop interface is active. 1 Snoop interface is inactive.
9	R/W	0x0	SYSBARDISABLE Disable broadcasting of barriers onto the system bus: 0 Barriers are broadcast onto the system bus. This requires an AMBA4 ACE, or AMBA5 CHI, interconnect. 1 Barriers are not broadcast onto the system bus. This is compatible with an AXI3 interconnect and most AMBA4 interconnects.a This pin is sampled only during reset of the Cortex-A53 processor.
8	R/W	0x1	GICCDISABLE Globally disables the GIC CPU interface logic and routes the “External” signals directly to the processor: 0 Enable the GIC CPU interface logic. 1 Disable the GIC CPU interface logic and route the legacy nIRQ, nFIQ, nVIRQ, and nVFIQ signals directly to the processor. Drive this signal HIGH when using a legacy interrupt controller such as GIC-400 which does not support GICv3 or GICv4.

Amlogic Proprietary and Confidential
Copyright © Amlogic. All rights reserved.

Bit(s)	R/W	Default	Description
7:4	R/W	0xF	AA64nAA32[3:0] Register width state: 0 AArch32. 1 AArch64. This pin is sampled only during reset of the processor.
3:0	R/W	0xF	CFGTE[3:0] Enable T32 exceptions. It sets the initial value of the TE bit in the CP15 SCTLR register: 0 TE bit is LOW. 1 TE bit is HIGH. This pin is sampled only during reset of the processor.

Table 7-80 CPUCTRL_SYS_A73_CFG0

Bit(s)	R/W	Default	Description
31:24	R/W	0x0	CLUSTERIDAFF2[7:0] Value read in the Cluster ID Affinity Level 2 field, MPIDR bits[23:16], of the CP15 MPIDR register. These pins are sampled only during reset of the processor.
23:16	R/W	0x0	CLUSTERIDAFF1[7:0] Value read in the Cluster ID Affinity Level 1 field, MPIDR bits[15:8], of the CP15 MPIDR register. These pins are sampled only during reset of the processor.
15:4	R	0x0	Reserved
3:0	R/W	0x0	DBGEN[3:0] Invasive debug enable: 0 Not enabled. 1 Enabled.

Table 7-81 CPUCTRL_SYS_A73_CFG1

Bit(s)	R/W	Default	Description
31:21	R/W	0x0	Reserved
20	R/W	0x0	DBGROMADDRV Debug ROM base address valid. If the debug ROM address cannot be determined, tie this signal LOW. This pin is sampled only during reset of the processor.
19:0	R/W	0x0	DBGROMADDR[31:12] Debug ROM base address. Specifies bits[39:12] of the ROM table physical address. If the address cannot be determined, tie this signal LOW. This pin is sampled only during reset of the processor.

Table 7-82 CPUCTRL_SYS_A73_CFG2

Bit(s)	R/W	Default	Description
31:2	R/W	0x3FFF_8000	RVBARADDR0[31:2] Core 0 Reset Vector Base Address for executing in 64-bit state. These pins are sampled only during reset of the processor.
1:0	R	0x0	Reserved

Amlogic Proprietary and Confidential
Copyright © Amlogic. All rights reserved.

Table 7-83 CPUCTRL_SYS_A73_CFG3

Bit(s)	R/W	Default	Description
31:2	R/W	0x3FFF_8000	RVBARADDR1[31:2] Core 1 Reset Vector Base Address for executing in 64-bit state. These pins are sampled only during reset of the processor.
1:0	R	0x0	Reserved

Table 7-84 CPUCTRL_SYS_A73_CFG4

Bit(s)	R/W	Default	Description
31:2	R/W	0x3FFF_8000	RVBARADDR2[31:2] Core 2 Reset Vector Base Address for executing in 64-bit state. These pins are sampled only during reset of the processor.
1:0	R	0x0	Reserved

Table 7-85 CPUCTRL_SYS_A73_CFG5

Bit(s)	R/W	Default	Description
31:2	R/W	0x3FFF_8000	RVBARADDR3[31:2] Core 3 Reset Vector Base Address for executing in 64-bit state. These pins are sampled only during reset of the processor.
1:0	R	0x0	Reserved

Table 7-86 CPUCTRL_SYS_A73_CFG6

Bit(s)	R/W	Default	Description
31:16	R/W	0x0	ICDTDATA[15:0] AXI4 Stream Protocol signal. Distributor to GIC CPU Interface messages. TDATA is the primary payload that is used to provide the data that is passing across the interface.
15	R/W	0x0	ICCTREADY AXI4 Stream Protocol signal. Distributor to GIC CPU Interface messages. TREADY indicates that the slave can accept a transfer in the current cycle.
14:13	R/W	0x0	ICDTDEST[1:0] AXI4 Stream Protocol signal. Distributor to GIC CPU Interface messages. TDEST provides routing information for the data stream.
12	R/W	0x0	ICDTLAST AXI4 Stream Protocol signal. Distributor to GIC CPU Interface messages. TLAST indicates the boundary of a packet.
11	R/W	0x0	ICDTVALID AXI4 Stream Protocol signal. Distributor to GIC CPU Interface messages. TVALID indicates that the master is driving a valid transfer.
10	R/W	0x0	L2FLUSHREQ L2 hardware flush request.
9	R/W	0x0	EVENTI Event input for processor wake-up from WFE state.

Amlogic Proprietary and Confidential
Copyright © Amlogic. All rights reserved.

Bit(s)	R/W	Default	Description
8	R/W	0x0	CLREXMONREQ Clearing of the external global exclusive monitor request. When this signal is asserted, it acts as a WFE wake-up event to all the cores in the MPCore device.
7:4	R	0x0	Reserved
3:0	R/W	0x0	EDBGRQ[3:0] External debug request: 0 No external debug request. 1 External debug request. The processor treats the EDBGRQ input as level-sensitive. The EDBGRQ input must be asserted until the processor asserts DBGACK.

Table 7-87 CPUCTRL_SYS_A73_CFG7

Bit(s)	R/W	Default	Description
31:26	R	0	Reserved
25	R/W	0x1	CNTVALUEB selection 0x0:select CNTVLAUEB from timestamp unit 0x1:select CNTVLAUEB from internal counter
24	R/W	0x1	L2QREQn Indicates that the power controller is ready to enter or exit retention for the L2 data RAMs
23:20	R/W	0xf	NEONQREQn[3:0] Indicates that the power controller is ready to enter or exit retention for the referenced Advanced SIMD and Floating-point block
19:16	R/W	0xF	DBGPWRDUP[3:0] Core powered up 0 Core is powered down. 1 Core is powered up.
15:12	R/W	0xf	CPUQREQn[3:0] Indicates that the power controller is ready to enter or exit retention for the referenced core
11:8	R/W	0xf	nSEI[3:0] System Error Interrupt request. Active-LOW, edge sensitive: 0 Activate SEI request. 1 Do not activate SEI request. Asserting the nSEI input causes one of the following to occur: • Asynchronous Data Abort, if taken to AArch32. The DFSR.FS field is set to indicate an Asynchronous External Abort. • SError interrupt, if taken to AArch64.

Amlogic Proprietary and Confidential
Copyright © Amlogic. All rights reserved.

Bit(s)	R/W	Default	Description
7:4	R/W	0xf	nVSEI[3:0] Virtual FIQ request. Active-LOW, level sensitive, asynchronous FIQ interrupt request: 0 Activate FIQ interrupt. 1 Do not activate FIQ interrupt. The processor treats the nVFIQ input as level-sensitive. The nVFIQ input must be asserted until the processor acknowledges the interrupt. If the GIC is enabled by tying the GICCDISABLE input pin LOW, the nVFIQ input pin must be tied off to HIGH. If the GIC is disabled by tying the GICCDISABLE input pin HIGH, the nVFIQ input pin can be driven by an external GIC in the SoC.
3:0	R/W	0xf	nREI[3:0] RAM Error Interrupt request. Active-LOW, edge sensitive: 0 Activate REI request. Reports an asynchronous RAM error in the system. 1 Do not activate REI request. Asserting the nREI input causes one of the following to occur: • Asynchronous Data Abort, if taken to AArch32. The DFSR.FS field is set to indicate an Asynchronous parity error on memory access. • SError interrupt, if taken to AArch64.

Table 7-88 CPUCTRL_SYS_A73_CFG8

Bit(s)	R/W	Default	Description
31	R/W	0x0	Coresight DAP component debug power up ack signal source selection: 0x0: use DAP debug power up request as system ack signal to DAP. 0x1: use bit[11] or bit[12] as the debug power up ack signal.
30	R/W	0x0	Coresight DAP component system power up ack signal source selection: 0x0: use DAP system power up request as system ack signal to DAP. 0x1: use bit[11] or bit[12] as the system power up ack signal.
29:13	R	0x0	Reserved
12	R/W	0x0	Connects to Coresight DAP component Power Controller Interface System power on request ack for csyspwrup
11	R/W	0x0	Connects Coresight DAP component Power Controller Interface Debug power on request ack for cdbgpwrup
10	R/W	0x0	Coresight DAP component JTAG ntrst. Normally JTAG trst comes from chip reset not from internally registers.
9:8	R	0x0	Reserved
7:4	R/W	0x0	Coresight DAP component instanceid If multiple serial wire targets with the same target ID might share a connection, instanceid must be driven differently for each target. Drive a unique value on this input if the system contains multiple SWJ-DPs.In other cases, you must tie this input LOW.
3	R/W	0x0	Coresight DAP component debug reset cdbgrst
2	R/W	0x0	Coresight TPIU component tpctl tie-off signal. If tracectl is not connected then this input must be tied LOW. ARM recommends that you do not connect tracectl, and you tie tpctl LOW, unless you must support a legacy Trace Port Adaptor that cannot support formatter operation in continuous mode.
1:0	R	0x0	Reserved

Amlogic Proprietary and Confidential
Copyright © Amlogic. All rights reserved.

Table 7-89 CPUCTRL_SYS_A73_CFG9

Bit(s)	R/W	Default	Description
31:28	R/W	0xf	Coretex A53 CTI Interrupt ack CTIIRQACK[3:0]
27:14	R/W	0x3fff	Reserved
13:10	R/W	0x0	Coretex A53 channel interface H/S bypass CIHSBYPASS[3:0]
9	R/W	0x1	Coretex A53 channel interface bypass CISBYPASS
8	R/W	0x1	Coresight Debug APB clock enable
7	R/W	0x1	Coresight DAP APB-AP tie off signals. If the APB-AP is connected to a debug bus, you must tie device HIGH
6	R/W	0x1	Drives Coresight CTI component niden Non-Invasive debug enable
5	R/W	0x1	Drives Coresight CTI component dbgen Invasive debug enable
4:0	R/W	0x0f	Coresight TPIU tie off signals. Indicates how many pins of tracedata[31:0] are connected to pins of the soc. 0xf means 16bits.

Table 7-90 CPUCTRL_SYS_A73_STATUS0

Bit(s)	R/W	Default	Description
31:28	R	0x0	Reserved
27	R	0x0	AWAKEUPM
26	R	0x0	L2FLUSHDONE L2 hardware flush complete.
25	R	0x0	STANDBYWFIL2 Indicates whether the L2 memory system is in WFI low-power state. This signal is active when the following conditions are met: • All cores are in WFI low-power state, held in reset, or nL2RESET is asserted LOW. • In an ACE configuration, ACINACTM is asserted HIGH. • In a CHI configuration, SINACT is asserted HIGH. • If ACP has been configured, AINACTS is asserted HIGH. • L2 memory system is idle.
24:21	R	0x0	STANDBYWFE[3:0] Indicates whether a core is in WFE low-power state: 0x0 Core not in WFE low-power state. 0x1 Core in WFE low-power state
20:17	R	0x0	STANDBYWFI[3:0] Indicates whether a core is in WFI low-power state: 0x0 Core not in WFI low-power state. 0x1 Core in WFI low-power state. This is the reset condition
16	R	0x0	AXIERRIRQ Error indicator for AXI or CHI transactions with a write response error condition. 0x1 interrupt. 0x0 No interrupt.
15:12	R	0x0	CTIIRQ[3:0] CTI interrupt (active-HIGH). 0x1 interrupt. 0x0 No interrupt.

Amlogic Proprietary and Confidential
Copyright © Amlogic. All rights reserved.

Bit(s)	R/W	Default	Description
11:8	R	0x0	VCPUMNTIRQ Virtual CPU interface maintenance interrupt PPI output. 0x1 interrupt. 0x0 No interrupt.
7:4	R	0x0	COMMIRQ[3:0] Communications channel receive or transmit interrupt request. 0x1 interrupt. 0x0 No interrupt.
3:0	R	0x0	PMUIRQ[3:0] PMU interrupt request. 0x1 interrupt. 0x0 No interrupt.

Table 7-91 CPUCTRL_SYS_A73_STATUS1

Bit(s)	R/W	Default	Description
31:28	R	0x0	DBGNOPWRDWN[3:0] Core no powerdown request 0 Do not request that the core stays powered up. 1 Request that the core stays powered up.
27:24	R	0x0	DBGACK[3:0] Debug acknowledge: 0 External debug request not acknowledged. 1 External debug request acknowledged.
23:20	R	0xf	COMMTX[3:0] Communication transmit channel. Transmit portion of Data Transfer Register empty flag: 0 Full. 1 Empty.
19:16	R	0x0	COMMRX[3:0] Communications channel receive. Receive portion of Data Transfer Register full flag: 0 Empty. 1 Full.
15	R	0x0	Coresight DAP system power up request
14	R	0x0	Coresight DAP debug reset request
13	R	0x0	Coresight timstamp tsforcesync Re-synchronize event indicator. This signal indicates an event that requires all the receivers to re-synchronize to the new tsvalue
12	R	0x0	Coresight DAP component debug power up request. cpwrupreq_cdbgpwrup
11:8	R	0x0	DBGPWRUPREQ[3:0] Core power up request: 0 Do not request that the core is powered up. 1 Request that the core is powered up.
7:4	R	0x0	DBGRSTREQ[3:0] Warm reset request.
3:0	R	0x0	WARMRSTREQ[3:0] Processor warm reset request 0 Do not apply warm reset. 1 Apply warm reset.

Amlogic Proprietary and Confidential
Copyright © Amlogic. All rights reserved.

Table 7-92 CPUCTRL_SYS_A73_STATUS2

Bit(s)	R/W	Default	Description
31:16	R/W		
15:8	R/W		RDMEMATTR[7:0] Read request memory attributes.
7:0	R/W		WRMEMATTR[7:0] Write request memory attributes.

Table 7-93 CPUCTRL_SYS_A73_STATUS3

Bit(s)	R/W	Default	Description
31:0	R/W	0	Reserved

Table 7-94 CPUCTRL_SYS_A73_STATUS4

Bit(s)	R/W	Default	Description
31:7	R	0x0	Reserved
6	R	0x0	CLREXMONACK Clearing of the external global exclusive monitor acknowledge.
5	R	0x0	EVENT0 Event output. Active when a SEV instruction is executed
4	R	0x0	Reserved
3:0	R	0x0	SMPEN[3:0] Indicates whether a core is taking part in coherency.

Table 7-95 CPUCTRL_SYS_A73_STATUS5

Bit(s)	R/W	Default	Description
31:27	R		Reserved
26:23	R		CPUQACTIVE[3:0] Indicates whether the referenced core is active.
22:19	R		CPUQDENY[3:0] Indicates that the referenced core denies the power controller retention request.
18:15	R		CPUQACCEPTn[3:0] Indicates that the referenced core accepts the power controller retention request.
14:11	R		NEONQACTIVE[3:0] Indicates whether the referenced Advanced SIMD and Floating-point block is active.
10:7	R		NEONQDENY[3:0] Indicates that the referenced Advanced SIMD and Floating-point block denies the power controller retention request.
6:3	R		NEONQACCEPTn[3:0] Indicates that the referenced Advanced SIMD and Floating-point block accepts the power controller retention request.

Amlogic Proprietary and Confidential
Copyright © Amlogic. All rights reserved.

Bit(s)	R/W	Default	Description
2	R		L2QACTIVE Indicates that the L2 data RAMs accept the power controller retention request.
1	R		L2QDENY Indicates that the L2 data RAMs deny the power controller retention request.
0	R		L2QACCEPTn Indicates that the L2 data RAMs accept the power controller retention request.

7.5 GPU

The Mali-G52 MP8 GPU is a hardware accelerator for 2D and 3D graphics system which compatible with the following graphics standards: OpenGL ES 3.2 Vulkan 1.1 and OpenCL 2.0. The developers can follow the ARM and Khronos official reference documents for programming details.

7.6 ADLA

ADLA(Amlogic Deep Learning Accelerator) main features are shown in the following list.

- ADLA HW interface
  - APB bus
    - Bus 32bits
    - Frequency: max 800MHz, asynchronous with core
    - Function: programming ADLA internal registers
  - AXI bus
    - Bus 128 bits
    - Frequency: max 800MHz, asynchronous with core
    - Function: access command queue, input image, intermediate tensors (feature & kernel) and output result from DRAM
  - AXI bus
    - Bus 128 bits
    - Frequency: max 800MHz, asynchronous with core
    - Function: access intermediate tensors (feature & kernel) result from SOC SRAM (AXI SRAM)
  - Interrupt
    - Total 1 bit
    - Level triggered
    - Function: Notify SW workload has been completed
- ADLA performance
  - Frequency: max 800MHz
  - Internal SRAM: 512K bytes
  - @i8/u8 : 2048 MACs for Conv2D + 64 MACs for DepthWise Conv2D
  - @i16: 512 MACs for Conv2D + 16 MACs for DepthWise Conv2D
- ADLA input image format
  - RGB: 3 channels
  - Y: 1 channel

Amlogic Proprietary and Confidential
Copyright © Amlogic. All rights reserved.

  - Width/Height: unlimited
  - Depth: 64K
- ADLA intermediate tensors format
  - Feature: u8/i8/i16
  - Weight: u8/i8/i16
- ADLA support frameworks
  - Tensorflow
  - TensorflowLite
  - ONNX
  - Pytorch
  - Darknet
  - MxNet
  - Caffe
- ADLA SW packages
  - User Mode Driver
  - Kernel Mode Driver
  - Offline Compiler for different frameworks
  - Performance monitor tool
- ADLA supported OP list

Conv2D	Conv2D
	DW_Conv2D
	Fully Connected
	TransPoseConv2D
Activation	Leaky_Relu
	Relu
	Prelu
	Hswish
	Mish
	Sigmoid
	Tanh
	Sin
	Cos
Pool	Max_Pool

Amlogic Proprietary and Confidential
Copyright © Amlogic. All rights reserved.

	Avg_Pool
	ROI_Pool
ElementWise	Mul
	Add
	Sub
	Max
	Min
	Batch_Norm
	Abs
Tensor Manipulate	Concat/Split
	Squeeze
	Reshape
	Transpose/Permte
	ReSizeNearest
	ReSizeBiLnear
	Reorg
	Depth2Space
	Space2Depth
	Batch2Space
	Pad
	Crop
	Reverse
	Shuffle_Channel
	Strided_Slice
	Stack/Unstack
	Reduce_Sum

Amlogic Proprietary and Confidential
Copyright © Amlogic. All rights reserved.

	Reduce_Mean
Voice	LSTM
	GRU
	RNN

7.7 Clock

7.7.1 Overview

The clock and reset unit is an APB slave module that is designed for generating all of the internal and system clocks, resets of chip. The SoC uses an external 24MHz crystal; there are several internal PLLs which generate clock sources, as shown in the following table.

Table 7-96 Clock Source

PLL Type	Frequency	Integer/Fractional	Spread Spectrum
SYS0_PLL	1.6G~3.2G	integer	no
SYS1_PLL	1.6G~3.2G	integer	no
GP0_PLL	3~6G	fractional	Yes
GP1_PLL	1.6G~3.2G	integer	no
HIFI_PLL	3~6G	fractional	Yes
HDMI_RXPLL		fractional	Yes
Fixed PLL		integer	Yes
	MPLL0	fractional	Yes
	MPLL1	fractional	Yes
	MPLL2	fractional	Yes
	MPLL3	fractional	Yes
HDMI_TXPLL	3~6G	fractional	Yes
HDMI_RXPLL	3~6G	INT	No
DDR_PLL	3~6G	fractional	Yes
AUD_DDS	200M	fractional	Yes
TCON_PLL1~3	3~6G	fractional	Yes
PCIE_REF	100M	INT	NO
MCLK_PLL_TOP	74.25M	INT	NO
ETHPLL		fractional	No
USB2PLL		fractional	No

Amlogic Proprietary and Confidential
Copyright © Amlogic. All rights reserved.

Figure 7-11 PLLs Connection

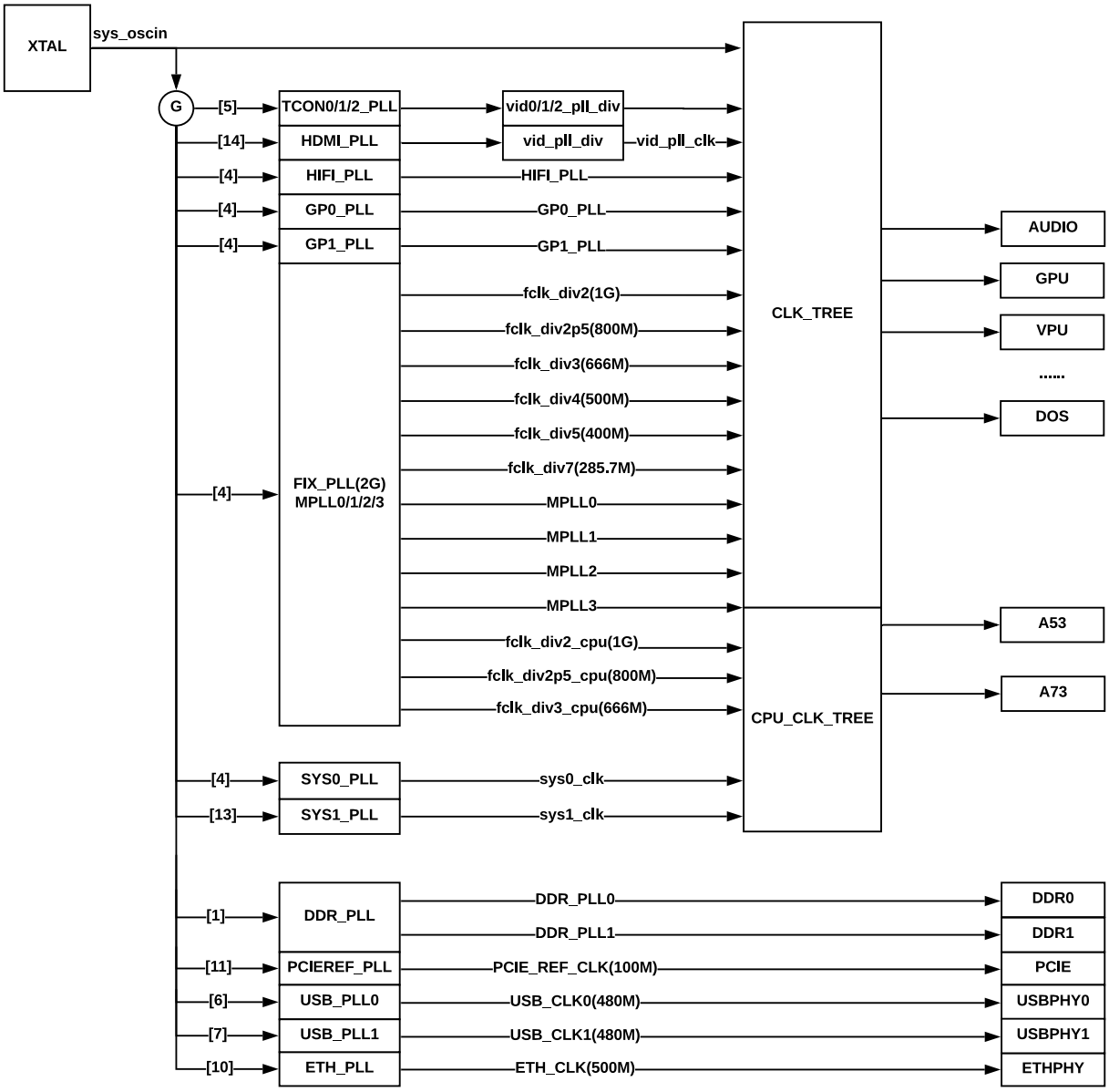

Two cfg mux is a special module for dynamic switch clock frequency.

It can generate two different clock sources by two muxs and divN.

Then selected by a “glitch free mux”.

Amlogic Proprietary and Confidential
Copyright © Amlogic. All rights reserved.

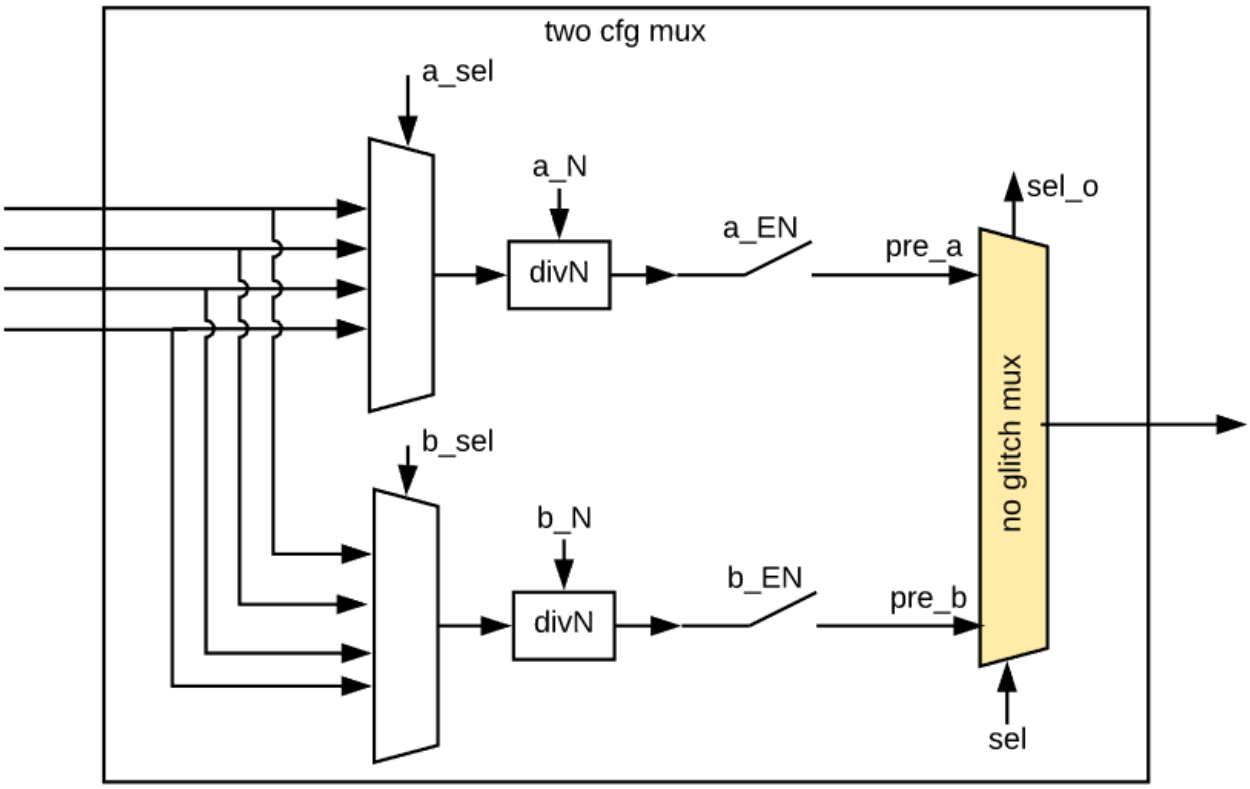

7.7.2 24MHz Crystal Oscillator Layout

Oscillator from XTAL pad will connect all PLLs and some analog modules:

Table 7-97 Xtal & Module Connections

0	xtal
1	cts_rtc_clk
2	sys_pll_div16
3	ddr_dpll_pt_clk
4	vid_pll0_clk
5	gp0_pll_clk
6	gp1_pll_clk
7	hifi_pll_clk
8	pcie_clk_inn
9	pcie1_clk_inp
10	a73_sys_pll_div16
11	mclk_pll_clk
12	cts_msr_clk

Amlogic Proprietary and Confidential
Copyright © Amlogic. All rights reserved.

0	xtal
13	hdmirx_aud_pll_clk
14	hdmirx_aud_pll_clk
15	0
16	AU_DAC1_CLK_TO_GPIO
17	sys_cpu_clk_div16
18	a73_sys_cpu_clk_div16
19	fclk_div2
20	fclk_div2p5
21	fclk_div3
22	fclk_div4
23	fclk_div5
24	fclk_div7
25	mp0_clk_out
26	mp1_clk_out
27	mp2_clk_out
28	mp3_clk_out
29	vid_pll1_clk
30	earcrx_pll_ckout
31	vid_pll2_clk

7.7.3 Frequency Calculation

7.7.3.1 SYS0 1 PLL / GP1 PLL

SYS0 1 PLL / GP1 PLL diagram is shown in the following figure.

Figure 7-12 SYS0 1 PLL / GP1 PLL

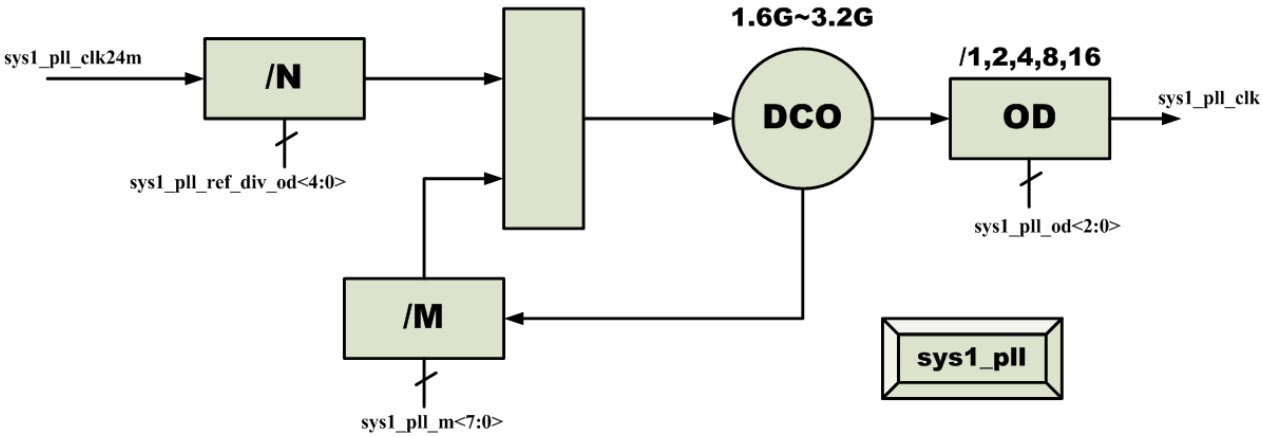

Amlogic Proprietary and Confidential
Copyright © Amlogic. All rights reserved.

Sys1_pll_clk : min=100M, max=3.2G

3 pll share the same core.

Main Function Description:

DCO Cover Range: 1.6G~3.2G

DCO frequency is calculated with the following equation:

$$f_{DCO} = f_{REF} \cdot (M) / N$$

OD control table is as following.

Table 7-98 OD Control

Block	Register	Function
OD	SYS1_PLL_OD<2:0>	000:/1
		001:/2
		010:/4
		011:/8
		100:/16

7.7.3.2 DDR_PLL

DDR_PLL diagram is shown in the following figure.

Figure 7-13 DDR_PLL

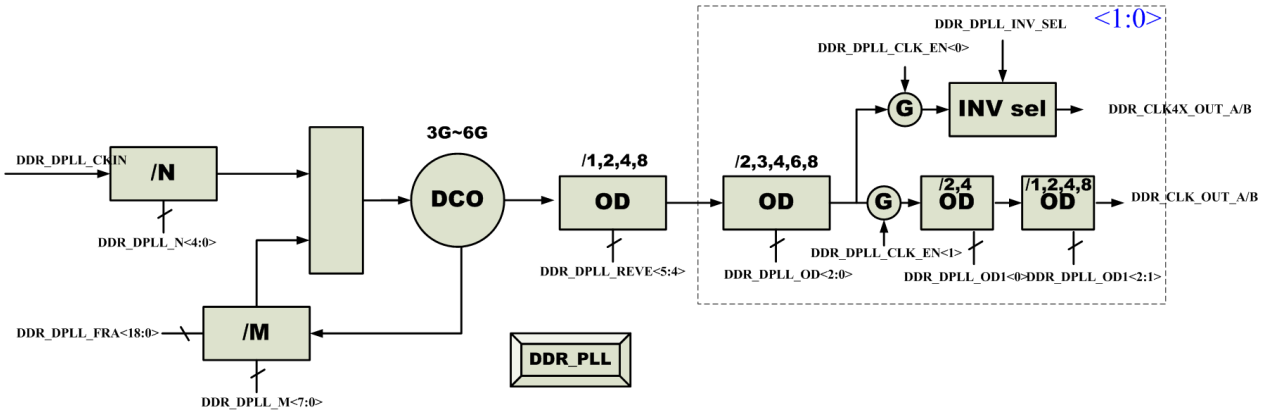

DDR_CLK4X_OUT: max=2.132G. DDR_CLK_OUT:max=1066M

Note

DDR_CLK_OUT_A/B for 2 DDR PHY with 0.25UI phase shift

For application: DDR3/LP DDR3/DDR4/ LP DDR4

OD control table is as following.

Amlogic Proprietary and Confidential
Copyright © Amlogic. All rights reserved.

Table 7-99 OD Control

Block	Register	Function
OD	DDR_DPLL_REVE<5:4> /Cntrl5<5:4>	00: /1
		01: /2
		10: /4
		11: /8
OD	DDR_DPLL_OD<2:0> /Cntrl0<18:16>	000: /2
		001:/3
		010:/4
		011:/6
		100:/8
OD	DDR_DPLL_OD1<0>/Cntrl0<19>	0:/2
		1:/4
OD	DDR_DPLL_OD1<2:1>/Cntrl0<21:20>	00: /1
		01: /2
		10: /4
		11: /8

Clock Type	4G bps	2G bps	1G bps	500M bps
VCO_CLK	4G	4G	4G	4G
DFI_CLK	1G	500M	250M	125M
DDR_CLK	2G	1G	500M	250M
Phase shift for DDR_CLKA DDR_CLKB	0.25T	0.25T	0.25T	0.25T
DDR_DPLL_ REVE<5:4>	00	01	10	11

7.7.3.3 HIFI PLL

HIFI PLL diagram is shown in the following figure.

Amlogic Proprietary and Confidential
Copyright © Amlogic. All rights reserved.

Figure 7-14 HIFI PLL

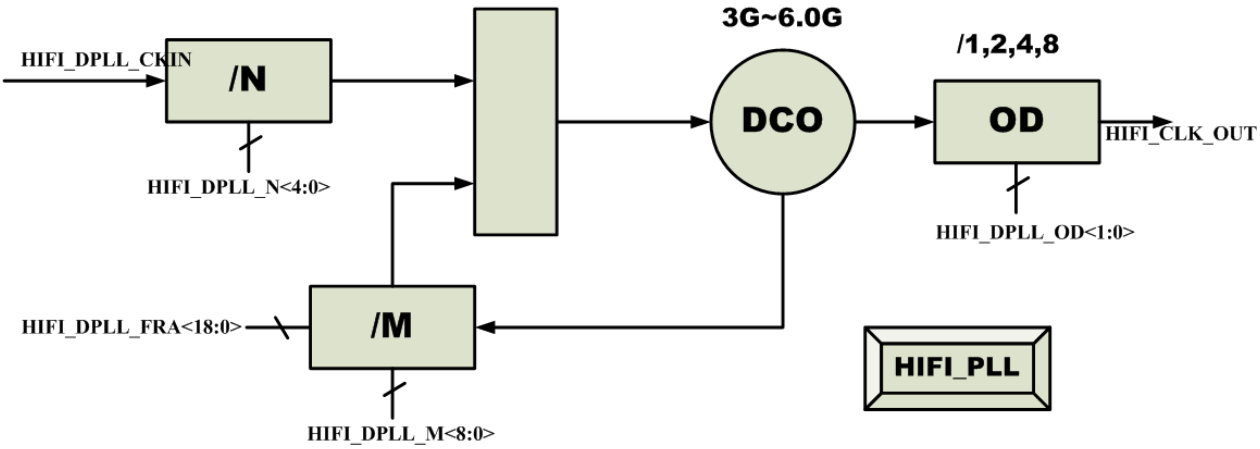

HIFI_CLK_OUT: min=375MHz max=6G

Note

OD add 1/8 option.

DCO frequency is calculated with the following equation:

$$f_{DCO} = f_{REF} \cdot (M + frac)/N$$

OD control table is as following.

Table 7-100 HIFI PLL OD Control

Block	Register	Function
OD	HIFI_DPLL_OD<1:0>	00:/1
		01:/2
		10:/4
		10:/8

Table 7-101 HIFI_DPLL_FRA<18:0>

	Bit18	Bit17	Bit16	Bit15	..	Bit0
Weight	+/-	1	frac= value 16:0 / 100000 100000=17'h186a0			

7.7.3.4 GP0_PLL

GP0_PLL diagram is shown in the following figure.

Amlogic Proprietary and Confidential
Copyright © Amlogic. All rights reserved.

Figure 7-15 GP0_PLL

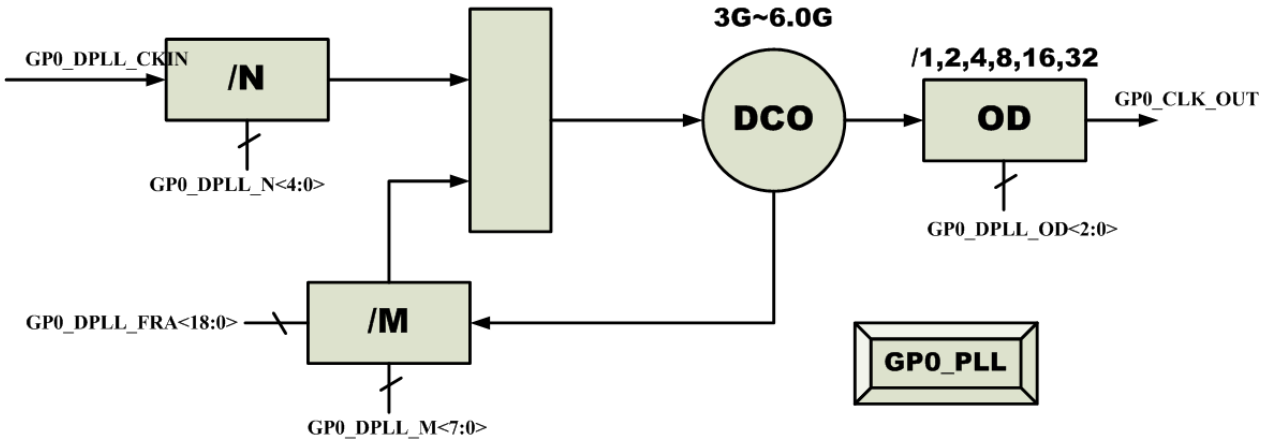

GP0_CLK_OUT: min=375MHz max=6G

DCO frequency is calculated with the following equation:

$$f_{DCO} = f_{REF} \cdot (M + frac)/N$$

OD control table is as following.

Table 7-102 GP0_PLL OD Control

Block	Register	Function
OD	GP0_DPLL_OD<2:0>	000:/1
		001:/2
		010:/4
		011:/8
		100:/16
		101:/32

7.7.3.5 MPLL

MPLL diagram is shown in the following figure.

Amlogic Proprietary and Confidential
Copyright © Amlogic. All rights reserved.

Figure 7-16 MPLL

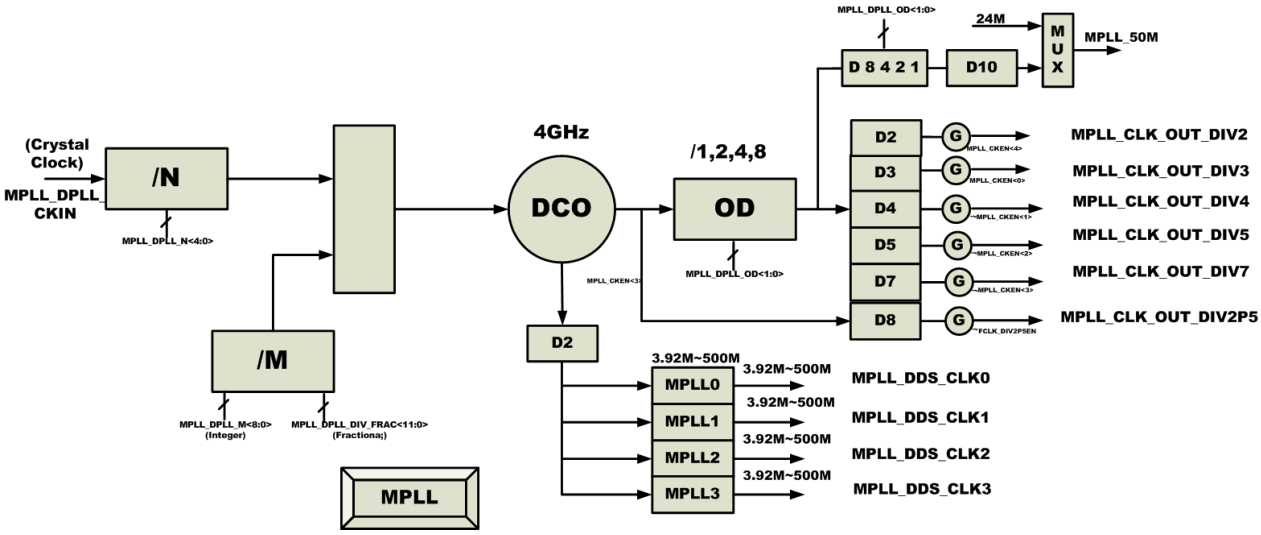

Main Function Description□

DCO Cover Range: 4GHz

For MPLL: in below equation, N>3. MPLL_DDS_CLK0~3 has SSG function

DCO frequency is calculated with the following equation:

$$Fout_2G=Fref*M*OD_FB/N$$

$$MPLL_CLK_OUT2=f(N2_integer, SDM_IN) = \left(\frac{2Ghz}{(N2_integer + \frac{SDM_IN}{16384})}\right)$$

7.7.3.6 PCIE PLL

PCIE PLL diagram is shown in the following figure.

Amlogic Proprietary and Confidential
Copyright © Amlogic. All rights reserved.

Figure 7-17 PCIE PLL

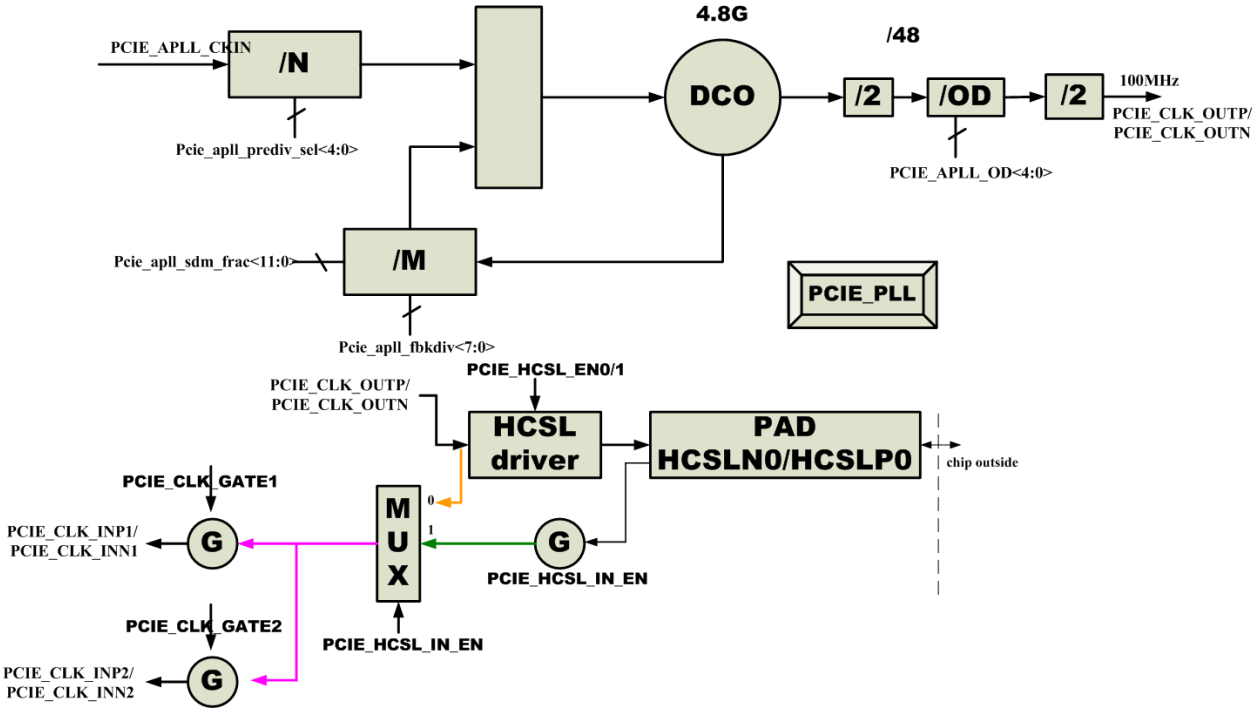

DCO frequency is calculated with the following equation:

$$f_{DCO} = f_{REF} \cdot (M + frac)/N$$

The PCIE PLL fractional value weight table is shown below.

Table 7-103 PCIE PLL OD Control Table

Block	Register	Function
OD	PCIE_APLL_OD<4:0>	OD<4:0>=5'h09 : 1/9

7.7.3.7 HDMI RX PLL

HDMI RX PLL diagram is shown in the following figure.

Amlogic Proprietary and Confidential
Copyright © Amlogic. All rights reserved.

Figure 7-18 HDMI RX PLL

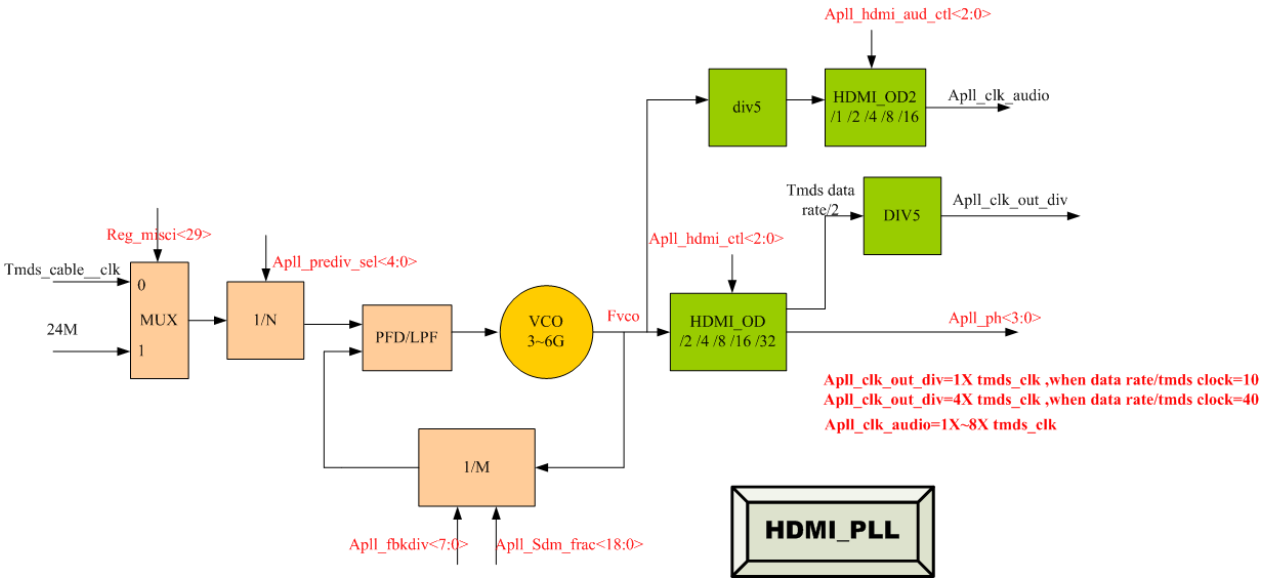

Frac<18:0>:

18 +-	17 1	16 0.5	2^17=131072

OD control table is as following.

Table 7-104 HDMI PLL OD Control

Block	Register	Function
HDMI_OD	Apll_hdmi_ctrl<2:0>	001: /2
		010:/4
		011:/8
		100:/16
		101:/32
HDMI_OD2	Apll_hdmi_aud_ctrl<2:0>	000: /1
		001:/2
		010:/4
		011:/8
		100:/16

7.7.3.8 HDMI TX PLL

HDMI TX PLL diagram is shown in the following figure.

Amlogic Proprietary and Confidential
Copyright © Amlogic. All rights reserved.

Figure 7-19 HDMI TX PLL

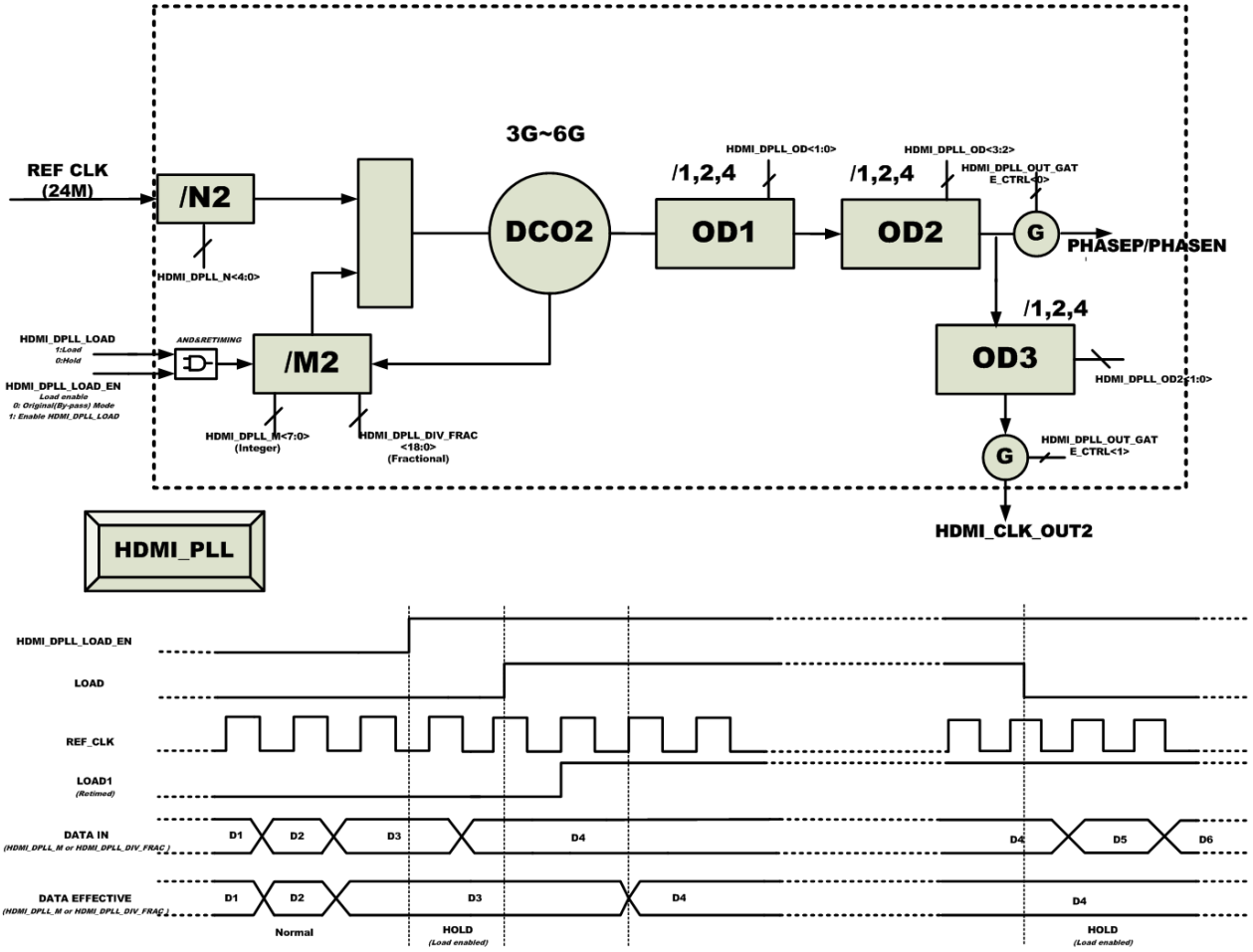

HDMI_CLK_OUT: min=187.5M max=6G.

Frac<18:0>:

18 +-	17 1	16 0.5	2^17=131072

OD control table:

Block	Register	Function
OD1	HDMI_DPLL_OD<1:0>	00: /1
		01:/2
		10:/4
OD2	HDMI_DPLL_OD<3:2>	00: /1
		01:/2
		10:/4
OD3	HDMI_DPLL_OD2<1:0>	00: /1
		01:/2
		10:/4

Amlogic Proprietary and Confidential
Copyright © Amlogic. All rights reserved.

Block	Register	Function
		11:/8

7.7.3.9 ETH PLL

ETH PLL diagram is shown in the following figure.

Figure 7-20 ETH PLL

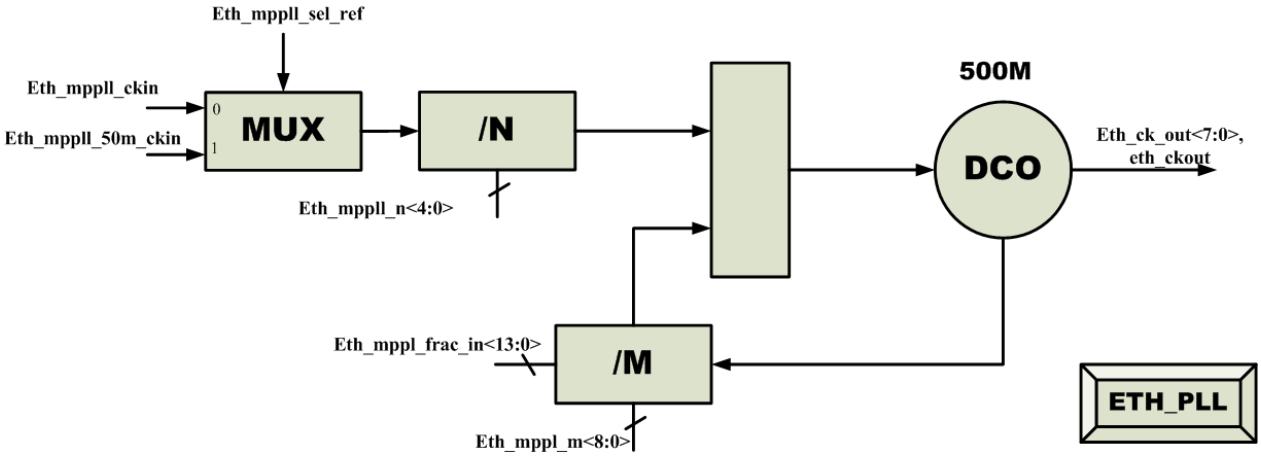

DCO:500Mz

Eth_ck_out<7:0>=eth_ckout=500MHz

$$f_{DCO} = f_{REF} \cdot (M + frac)/N$$

The ETH PLL fractional value weight table is shown below.

Table 7-105 ETH PLL Fractional Value Weight Table

	Bit13	Bit12	Bit11	Bit10	..	Bit0
Weight	1/2	1/2^2	1/2^3	1/2^4	..	1/2^14

7.7.3.10 USB2 PLL

USB2 PLL diagram is shown in the following figure.

Amlogic Proprietary and Confidential
Copyright © Amlogic. All rights reserved.

Figure 7-21 USB2 PLL

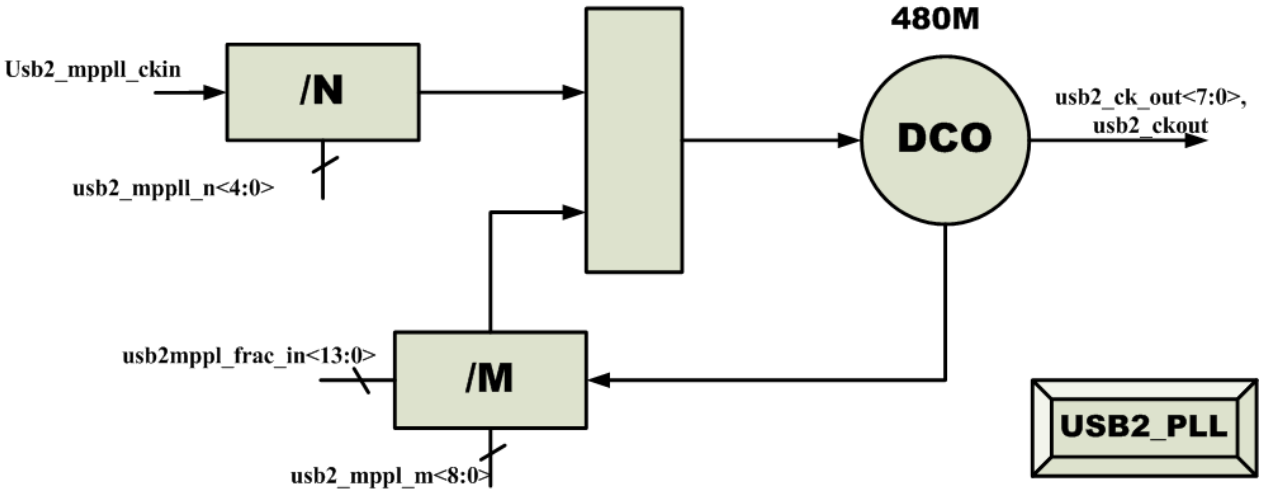

DCO frequency is 480M.

Eth_ck_out<7:0>=eth_ckout=480MHz

$$f_{DCO} = f_{REF} \cdot (M + frac)/N$$

The USB PLL fractional value weight table is shown below.

Table 7-106 USB PLL Fractional Value Weight Table

	Bit13	Bit12	Bit11	Bit10	..	Bit0
Weight	1/2	1/2^2	1/2^3	1/2^4	..	1/2^14

7.7.3.11 TCON PLL

TCON PLL diagram is shown in the following figure.

Amlogic Proprietary and Confidential
Copyright © Amlogic. All rights reserved.

Figure 7-22 TCON PLL

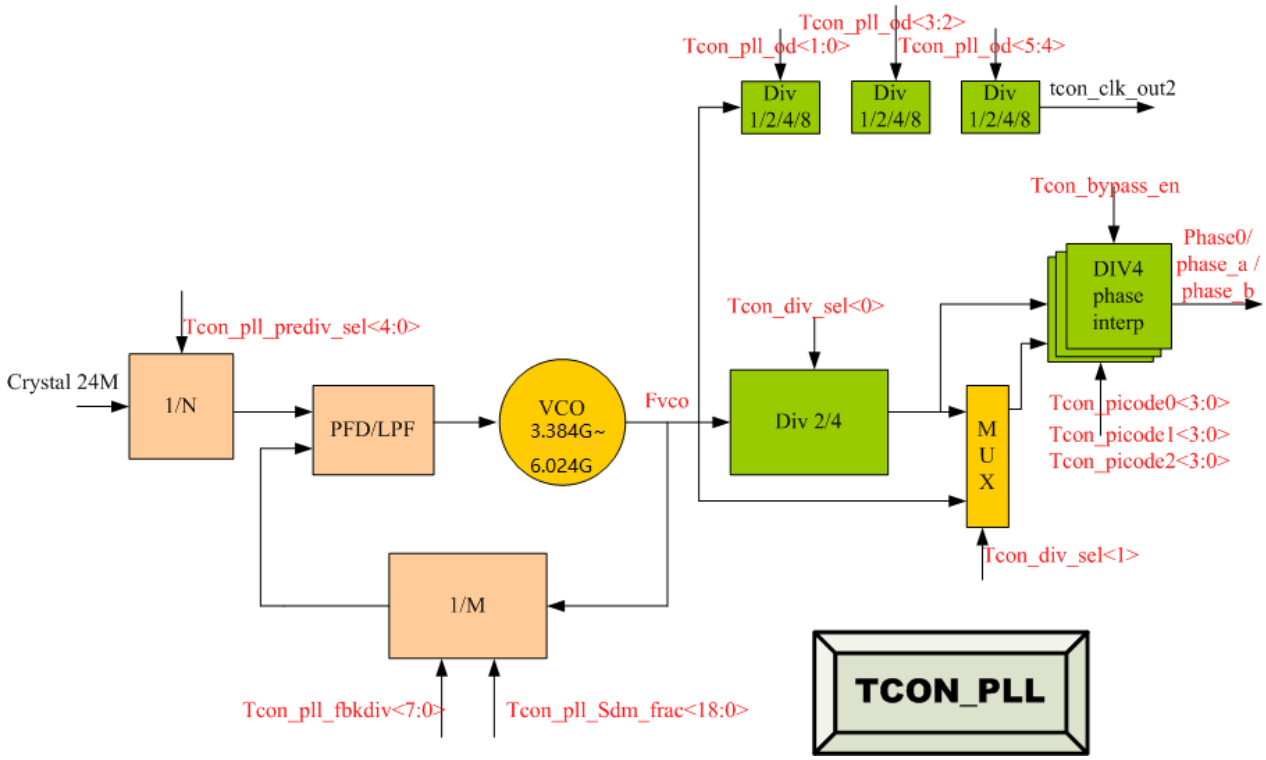

Wire	Register	Function
Tcon_pll_od<5:0>	tcon_pll_ctrl0<24:19>	00:/1
		01:/2
		10:/4
		11:/8
Tcon_bypass_en	tcon_pll_ctrl0<16>	0: /4
		1:/1
Tcon_div_sel<0>	tcon_pll_ctrl1<21>	0:/2
		1:/4
Tcon_div_sel<1>	tcon_pll_ctrl1<22>	0:from div2/4
		1:from vco

Amlogic Proprietary and Confidential
Copyright © Amlogic. All rights reserved.

7.7.3.12 AUD DDS

Figure 7-23 AUD DDS PLL

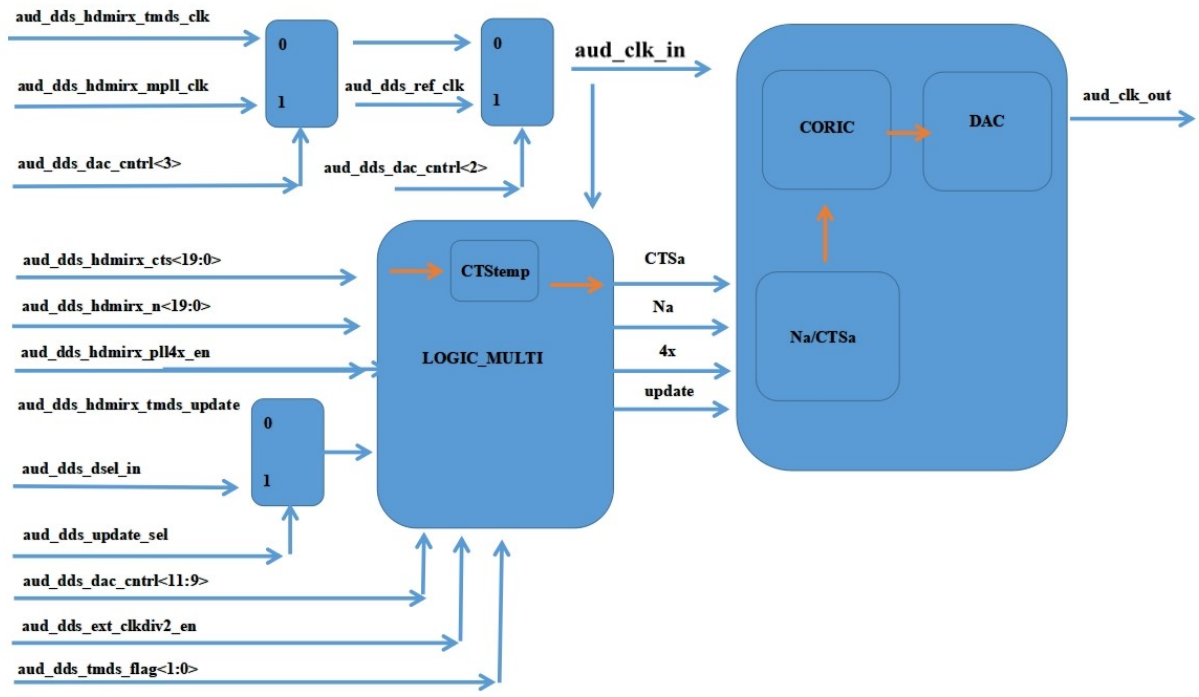

Main function:

aud_clk_out=Na/CTSa *aud_clk_in;

Setting:

- **Na:**

  aud_dds_ext_clkdiv2_en=0 ， Na=aud_dds_hdmirx_n<19:0>

  aud_dds_ext_clkdiv2_en=1 ， Na=aud_dds_hdmirx_n<19:0> *2 ;

- **CTSa:**
  - aud_dds_tmds_flag<1:0>=2’b0 , CTStemp=aud_dds_hdmirx_cts<19:0>;
  - aud_dds_tmds_flag<1:0>=2’b1 , CTStemp=aud_dds_hdmirx_cts<19:0>*2;
  - aud_dds_tmds_flag<1:0>=2’b10 , CTStemp=aud_dds_hdmirx_cts<19:0>*4;
  - aud_dds_tmds_flag<1:0>=2’b11 , CTStemp=aud_dds_hdmirx_cts<19:0>*8;
  -
  - aud_dds_dac_cntrl<11:9> =3’b0 , CTSa= CTStemp
  - aud_dds_dac_cntrl<11:9> =3’b1 , CTSa= CTStemp*40
  - aud_dds_dac_cntrl<11:9> =3’b010 , CTSa= CTStemp*4
  - aud_dds_dac_cntrl<11:9> =3’b011 , CTSa= CTStemp*8
  - aud_dds_dac_cntrl<11:9> =3’b100 , CTSa= CTStemp*5
  - aud_dds_dac_cntrl<11:9> =3’b101 , CTSa= CTStemp*10
  - aud_dds_dac_cntrl<11:9> =3’b110 , CTSa= CTStemp*16
  - aud_dds_dac_cntrl<11:9> =3’b111 , CTSa= CTStemp*20

Amlogic Proprietary and Confidential
Copyright © Amlogic. All rights reserved.

7.7.3.13 MCLK_PLL_TOP

Figure 7-24 MCLK_PLL_TOP PLL

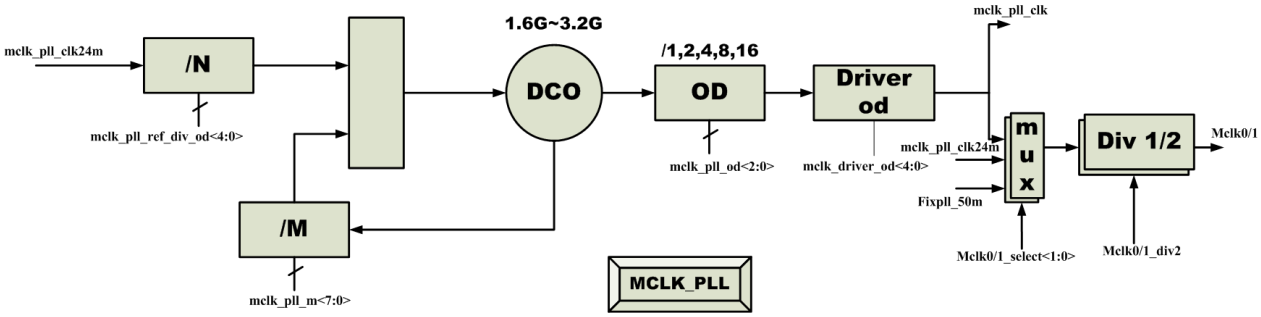

Register	Function
Mclk_pll_od	000: /1
	001:/2
	010:/4
	011:/8
	100:16
Mclk_driver_od	N=div N
Mclk0/1_select<1:0>	00:/mclk_pll_clk 01:/24M 10:fixpll_50m
Mclk0/1_div2	0: div1 1:div2

7.7.4 Clock Measure

Clock source is as follows:

Table 7-107 Clock Measure Source

No.	Clock Measure Source
222	cts_enc0_clk
221	cts_enc1_clk
220	cts_enc2_clk
219	cts_enc0_if_clk
218	am_ring_osc_clk_out[32]
217	am_ring_osc_clk_out[31]
216	am_ring_osc_clk_out[30]
215	am_ring_osc_clk_out[29]
214	am_ring_osc_clk_out[28]

Amlogic Proprietary and Confidential
Copyright © Amlogic. All rights reserved.

No.	Clock Measure Source
213	am_ring_osc_clk_out[27]
212	am_ring_osc_clk_out[26]
211	am_ring_osc_clk_out[25]
210	am_ring_osc_clk_out[24]
209	am_ring_osc_clk_out[23]
208	am_ring_osc_clk_out[22]
207	am_ring_osc_clk_out[21]
206	am_ring_osc_clk_out[20]
205	vid_pll2_div_clk_out
204	vid_pll1_div_clk_out
203	mipi_csi_phy0__clk_out
202	mipi_csi_phy1__clk_out
201	mipi_csi_phy2__clk_out
200	mipi_csi_phy3__clk_out
199	am_ring_osc_clk_out[19]
198	am_ring_osc_clk_out[18]
197	am_ring_osc_clk_out[17]
196	am_ring_osc_clk_out[16]
195	am_ring_osc_clk_out[15]
194	am_ring_osc_clk_out[14]
193	am_ring_osc_clk_out[13]
192	am_ring_osc_clk_out[12]
191	am_ring_osc_clk_out[11]
190	am_ring_osc_clk_out[10]
189	am_ring_osc_clk_out[9]
188	am_ring_osc_clk_out[8]
187	am_ring_osc_clk_out[7]
186	am_ring_osc_clk_out[6]
185	am_ring_osc_clk_out[5]
184	am_ring_osc_clk_out[4]
183	am_ring_osc_clk_out[3]
182	am_ring_osc_clk_out[2]

Amlogic Proprietary and Confidential
Copyright © Amlogic. All rights reserved.

No.	Clock Measure Source
181	am_ring_osc_clk_out[1]
180	am_ring_osc_clk_out[0]
179	rng_ring_3
178	rng_ring_2
177	rng_ring_1
176	rng_ring_0
175	
174	
173	a73_sys_cpu_clk_div16
172	a73_sys_pll_div16
171	mclk_pll_clk
170	cts_ACLKM
169	pwm_a_clk
168	pwm_b_clk
167	pwm_c_clk
166	pwm_d_clk
165	pwm_e_clk
164	pwm_f_clk
163	pwm_ao_a_clk
162	pwm_ao_b_clk
161	pwm_ao_c_clk
160	pwm_ao_d_clk
159	pwm_ao_e_clk
158	pwm_ao_f_clk
157	pwm_ao_g_clk
156	pwm_ao_h_clk
155	
154	
153	
152	
151	
150	
149	

Amlogic Proprietary and Confidential
Copyright © Amlogic. All rights reserved.

No.	Clock Measure Source
148	earcrx_pll_dmac_ck
147	audio_resampleb_clk
146	audio_pdm_dclk
145	audio_spdifin_mst_clk
144	audio_spdifout_mst_clk
143	audio_spdifoutb_mst_clk
142	audio_pdm_sysclk
141	audio_resamplea_clk
140	audio_tdmin_a_sclk
139	audio_tdmin_b_sclk
138	audio_tdmin_c_sclk
137	audio_tdmin_lb_sclk
136	audio_tdmout_a_sclk
135	audio_tdmout_b_sclk
134	audio_tdmout_c_sclk
133	audio_locker_in_clk
132	audio_locker_out_clk
131	acodec_dac_clk_x128
130	audio_vad_clk
129	
128	
127	
126	
125	
124	ts_nna_clk
123	ts_a53_clk
122	ts_a73_clk
121	cts_ts_clk(temp sensor)
120	
119	cts_anakin_clk
118	cts_spicc_0_clk
117	cts_spicc_1_clk
116	i_gpio_msr

Amlogic Proprietary and Confidential
Copyright © Amlogic. All rights reserved.

No.	Clock Measure Source
115	cts_sd_emmc_clk_A
114	cts_sd_emmc_clk_B
113	cts_sd_emmc_clk_C
112	
111	cts_sar_adc_clk
110	cts_sc_clk(smartcard)
109	cts_dsi0_phy_clk
108	cts_dsi1_phy_clk
107	
106	
105	hdmirx_dsd_clk
104	hdmirx_aud_clk
103	hdmirx_vid_clk
102	cts_hdmirx_meter_clk
101	cts_hdmirx_acr_ref_clk
100	cts_hdmirx_aud_pll_clk
99	cts_hevcf_clk
98	cts_hevcb_clk
97	cts_hcodec_clk
96	cts_wave521_bclk
95	cts_wave521_cclk
94	cts_wave521_aclk
93	cts_vdec_clk
92	
91	
90	
89	
88	
87	cts_spicc_2_clk
86	cts_spicc_3_clk
85	cts_spicc_4_clk
84	cts_spicc_5_clk
83	cts_hdmi_tx_pnx_clk

Amlogic Proprietary and Confidential
Copyright © Amlogic. All rights reserved.

No.	Clock Measure Source
82	cts_hdmitx_aud_clk
81	cts_hdmitx_200m_clk
80	cts_hdmitx_prif_clk
79	
78	cts_hdmitx_fe_clk
77	cts_hdmitx_sys_clk
76	HDMITX_TMDS_CLK
75	
74	
73	cts_mipi_isp_clk
72	cts_mipi_csi_phy_clk
71	
70	cts_dsi_a_meas_clk
69	cts_aud_sck
68	cts_aud_pll_clk
67	cts_ge2d_clk
66	cts_vapbclk
65	cts_vid_lock_clk
64	cts_vpu_clkc
61	cts_vpu_clk
63	cts_vpu_clkb_tmp
62	cts_vpu_clkb
60	cts_vdin_meas_clk
59	cts_hdmi_tx_pixel_clk
58	lcd_an_clk_ph3
57	lcd_an_clk_ph2
56	mod_tcon_clko
55	cts_vpu_clk_buf
54	cts_vdac_clk
53	
52	
51	hdmi_vid_pll_clk
50	vid_pll0_div_clk_out

Amlogic Proprietary and Confidential
Copyright © Amlogic. All rights reserved.

No.	Clock Measure Source
49	cts_hdmirx_hdcp2x_eclk
48	cts_hdmirx_cfg_clk
47	cts_hdmirx_2m_clk
46	cts_hdmirx_5m_clk
45	hdmirx_apll_clk_audio
44	hdmirx_cable_clk
43	hdmirx_tmds_clk
42	hdmirx_apll_clk_out_div
41	cts_dsi_b_meas_clk
40	ephy_test_clk
39	eth_phy_plltxclk
38	eth_phy_rxclk
37	co_tx_clk
36	co_rx_clk
35	mod_eth_rx_clk_rmii
34	co_clkin_to_mac
33	cts_eth_clk_rmii
32	cts_eth_clk125Mhz
31	mod_eth_tx_clk
30	mod_eth_phy_ref_clk
29	cts_gdc_clk
28	cts_amlgdc_clk
27	paie1_clk_inn
26	paie1_clk_inp
25	earcrx_pll_ckout
24	ddr0_dpll_pt_clk
23	sys_pll_div16
22	eth_mppll_50m_ckout
21	gp1_pll_clk
20	gp0_pll_clk
19	hifi_pll_clk
18	mpll_clk_test_out

Amlogic Proprietary and Confidential
Copyright © Amlogic. All rights reserved.

No.	Clock Measure Source
17	pcie_clk_inn
16	pcie_clk_inp
15	mpll_clk_50m
14	mp3_clk_out
13	mp2_clk_out
12	mp1_clk_out
11	mp0_clk_out
10	fclk_div5
9	
8	cts_cecb_clk
7	cts_ceca_clk
6	sys_cpu_clk_div16
5	cts_mali_clk
4	cts_dspb_clk
3	cts_dspa_clk
2	cts_rtc_clk
1	cts_axi_clk
0	cts_sys_clk

Register Address

For below registers the base address is 0xfe048000.

Each register final address = BASE + address * 4.

The following lists describe the mapping between each MSR_CLK register and its address.

- MSR_CLK_REG0 0xfe048000
- MSR_CLK_REG1 0xfe048004
- MSR_CLK_REG2 0xfe048008
- MSR_CLK_REG3 0xfe04800c
- MSR_CLK_REG4 0xfe048010
- MSR_CLK_REG5 0xfe048014
- MSR_CLK_DUTY 0xfe048018

Amlogic Proprietary and Confidential
Copyright © Amlogic. All rights reserved.

Register Description

Table 7-108 MSR_CLK_DUTY

Bit(s)	R/W	Default	Description
31-16	R	0	DUTY_CNT_HIGH: This value represents the HIGH-count during duty cycle measurements
15-0	R	0	DUTY_CNT_LOW: This value represents the LOW-count during duty cycle measurements

Table 7-109 MSR_CLK_REG0

Bit(s)	R/W	Default	Description
31	R	0	BUSY: If this bit is set to 1, then the measure logic is busy
30-29	R	0	PROCESS_COUNT: This is a counter that simply increments every time a measurement is started
28	R	0	Limit Error
27-20	R/W	0	MSR_CLK_MUX_SEL: Selects the clock to measure. See example C-code
19	R/W	0	CLK_EN: The incoming clock is gated to prevent glitches from entering the measurement logic. Set this bit to 1 once the external clock has been established and is stable.
18	RW	0	One_shot_enable
17	R/W	0	CONT_EN: Set this bit to 1 to enable continuous frequency measurements
16	R/W	0	ENABLE: This is a general enable to enable the clock measurement circuit. If CONT_EN is set to 1 above, then the circuit will continually measure. If CONT_EN is set to 0, then the circuit will make one measurement. To restart another measurement, you must set ENABLE low then high.
15-0	R/W	0	MSR_TIME: This value establishes the gate time of the measurement with a 1uS resolution. The measurement module will count I2S MCLK clocks for N uS

Table 7-110 MSR_CLK_REG1

Bit(s)	R/W	Default	Description
31	R	0	DCYCLE_MSR_DONE: If this bit is set to 1, then the duty cycle measurement is done
30	R/W	0	unused
29	R/W	0	DCYCLE_ENABLE: Set this bit to enable start a duty cycle measurement
28	R/W	0	DCYCLE_CLK_EN: Set this bit to enable the high-frequency duty cycle clock
27-20	R/W	0	DCYCLE_TCNT: This value represents the number of uS to measure. This value should be less than 252.
19-0	R/W	0	unused

Table 7-111 MSR_CLK_REG2

Bit(s)	R/W	Default	Description
19-0	R	0	MEASURED_VALUE: This is the count of cycles measured during the programmed gate time.

Amlogic Proprietary and Confidential
Copyright © Amlogic. All rights reserved.

Table 7-112 MSR_CLK_REG3

Bit(s)	R/W	Default	Description
19-0	R	0	Min_exp

Table 7-113 MSR_CLK_REG4

Bit(s)	R/W	Default	Description
19-0	R	0	Max_exp

Table 7-114 MSR_CLK_REG5

Bit(s)	R/W	Default	Description
0	R	0	Start_p

7.7.5 Register Description

Register Address

For below registers, the base address is FE000000.

Each register final address = BASE + address * 4.

The following lists describe the mapping between each register and its address.

- CLKCTRL_OSCIN_CTRL 0xfe000004
- CLKCTRL_RTC_BY_OSCIN_CTRL0 0xfe000008
- CLKCTRL_RTC_BY_OSCIN_CTRL1 0xfe00000c
- CLKCTRL_RTC_CTRL 0xfe000010
- CLKCTRL_CHECK_CLK_RESULT 0xfe000014
- CLKCTRL_MBIST_ATSPEED_CTRL 0xfe000018
- CLKCTRL_LOCK_BIT_REG0 0xfe000020
- CLKCTRL_LOCK_BIT_REG1 0xfe000024
- CLKCTRL_LOCK_BIT_REG2 0xfe000028
- CLKCTRL_LOCK_BIT_REG3 0xfe00002c
- CLKCTRL_PROT_BIT_REG0 0xfe000030
- CLKCTRL_PROT_BIT_REG1 0xfe000034
- CLKCTRL_PROT_BIT_REG2 0xfe000038
- CLKCTRL_PROT_BIT_REG3 0xfe00003c
- CLKCTRL_SYS_CLK_CTRL0 0xfe000040
- CLKCTRL_SYS_CLK_EN0_REG0 0xfe000044
- CLKCTRL_SYS_CLK_EN0_REG1 0xfe000048
- CLKCTRL_SYS_CLK_EN0_REG2 0xfe00004c
- CLKCTRL_SYS_CLK_EN0_REG3 0xfe000050
- CLKCTRL_SYS_CLK_EN1_REG0 0xfe000054
- CLKCTRL_SYS_CLK_EN1_REG1 0xfe000058
- CLKCTRL_SYS_CLK_EN1_REG2 0xfe00005c

Amlogic Proprietary and Confidential
Copyright © Amlogic. All rights reserved.

- CLKCTRL_SYS_CLK_EN1_REG3 0xfe000060
- CLKCTRL_SYS_CLK_VPU_EN0 0xfe000064
- CLKCTRL_SYS_CLK_VPU_EN1 0xfe000068
- CLKCTRL_AXI_CLK_CTRL0 0xfe00006c
- CLKCTRL_TST_CTRL0 0xfe000080
- CLKCTRL_TST_CTRL1 0xfe000084
- CLKCTRL_CECA_CTRL0 0xfe000088
- CLKCTRL_CECA_CTRL1 0xfe00008c
- CLKCTRL_CECB_CTRL0 0xfe000090
- CLKCTRL_CECB_CTRL1 0xfe000094
- CLKCTRL_SC_CLK_CTRL 0xfe000098
- CLKCTRL_DSPA_CLK_CTRL0 0xfe00009c
- CLKCTRL_DSPB_CLK_CTRL0 0xfe0000a0
- CLKCTRL_CLK12_24_CTRL 0xfe0000a8
- CLKCTRL_ANAKIN_CLK_CTRL 0xfe0000ac
- CLKCTRL_GDC_CLK_CTRL 0xfe0000b0
- CLKCTRL_AMLGDC_CLK_CTRL 0xfe0000b4
- CLKCTRL_VID_CLK0_CTRL 0xfe0000c0
- CLKCTRL_VID_CLK0_CTRL2 0xfe0000c4
- CLKCTRL_VID_CLK0_DIV 0xfe0000c8
- CLKCTRL_VIID_CLK0_DIV 0xfe0000cc
- CLKCTRL_VIID_CLK0_CTRL 0xfe0000d0
- CLKCTRL_ENC0_HDMI_CLK_CTRL 0xfe0000d4
- CLKCTRL_ENC2_HDMI_CLK_CTRL 0xfe0000d8
- CLKCTRL_ENC_HDMI_CLK_CTRL 0xfe0000dc
- CLKCTRL_HDMI_CLK_CTRL 0xfe0000e0
- CLKCTRL_VID_PLL_CLK0_DIV 0xfe0000e4
- CLKCTRL_VPU_CLK_CTRL 0xfe0000e8
- CLKCTRL_VPU_CLKB_CTRL 0xfe0000ec
- CLKCTRL_VPU_CLKC_CTRL 0xfe0000f0
- CLKCTRL_VID_LOCK_CLK_CTRL 0xfe0000f4
- CLKCTRL_VDIN_MEAS_CLK_CTRL 0xfe0000f8
- CLKCTRL_VAPBCLK_CTRL 0xfe0000fc
- CLKCTRL_MIPIDSI_PHY_CLK_CTRL 0xfe000104
- CLKCTRL_MIPI_CSI_PHY_CLK_CTRL 0xfe00010c
- CLKCTRL_MIPI_ISP_CLK_CTRL 0xfe000110
- CLKCTRL_WAVE420L_CLK_CTRL 0xfe000114
- CLKCTRL_WAVE420L_CLK_CTRL2 0xfe000118
- CLKCTRL_HTX_CLK_CTRL0 0xfe00011c
- CLKCTRL_HTX_CLK_CTRL1 0xfe000120
- CLKCTRL_HRX_CLK_CTRL0 0xfe000128
- CLKCTRL_HRX_CLK_CTRL1 0xfe00012c
- CLKCTRL_HRX_CLK_CTRL2 0xfe000130
- CLKCTRL_HRX_CLK_CTRL3 0xfe000134

Amlogic Proprietary and Confidential
Copyright © Amlogic. All rights reserved.

- CLKCTRL_VDEC_CLK_CTRL 0xfe000140
- CLKCTRL_VDEC2_CLK_CTRL 0xfe000144
- CLKCTRL_VDEC3_CLK_CTRL 0xfe000148
- CLKCTRL_VDEC4_CLK_CTRL 0xfe00014c
- CLKCTRL_WAVE521_CLK_CTRL 0xfe000150
- CLKCTRL_WAVE521_CLK_CTRL2 0xfe000154
- CLKCTRL_TS_CLK_CTRL 0xfe000158
- CLKCTRL_MALI_CLK_CTRL 0xfe00015c
- CLKCTRL_VIPNANOQ_CLK_CTRL 0xfe000160
- CLKCTRL_ETH_CLK_CTRL 0xfe000164
- CLKCTRL_NAND_CLK_CTRL 0xfe000168
- CLKCTRL_SD_EMMC_CLK_CTRL 0xfe00016c
- CLKCTRL_BT656_CLK_CTRL 0xfe000170
- CLKCTRL_SPICC_CLK_CTRL 0xfe000174
- CLKCTRL_GEN_CLK_CTRL 0xfe000178
- CLKCTRL_SAR_CLK_CTRL0 0xfe00017c
- CLKCTRL_PWM_CLK_AB_CTRL 0xfe000180
- CLKCTRL_PWM_CLK_CD_CTRL 0xfe000184
- CLKCTRL_PWM_CLK_EF_CTRL 0xfe000188
- CLKCTRL_PWM_CLK_AO_AB_CTRL 0xfe0001a0
- CLKCTRL_PWM_CLK_AO_CD_CTRL 0xfe0001a4
- CLKCTRL_PWM_CLK_AO_EF_CTRL 0xfe0001a8
- CLKCTRL_PWM_CLK_AO_GH_CTRL 0xfe0001ac
- CLKCTRL_SPICC_CLK_CTRL1 0xfe0001c0
- CLKCTRL_SPICC_CLK_CTRL2 0xfe0001c4
- CLKCTRL_VID_CLK1_CTRL 0xfe0001cc
- CLKCTRL_VID_CLK1_CTRL2 0xfe0001d0
- CLKCTRL_VID_CLK1_DIV 0xfe0001d4
- CLKCTRL_VIID_CLK1_DIV 0xfe0001d8
- CLKCTRL_VIID_CLK1_CTRL 0xfe0001dc
- CLKCTRL_VID_CLK2_CTRL 0xfe0001e0
- CLKCTRL_VID_CLK2_CTRL2 0xfe0001e4
- CLKCTRL_VID_CLK2_DIV 0xfe0001e8
- CLKCTRL_VIID_CLK2_DIV 0xfe0001ec
- CLKCTRL_VIID_CLK2_CTRL 0xfe0001f0
- CLKCTRL_VID_PLL_CLK1_DIV 0xfe0001f4
- CLKCTRL_VID_PLL_CLK2_DIV 0xfe0001f8
- CLKCTRL_MIPI_DSI_MEAS_CLK_CTRL 0xfe000200
- CLKCTRL_HDMI_VID_PLL_CLK_DIV 0xfe000204
- CLKCTRL_TIMESTAMP_CTRL 0xfe000400
- CLKCTRL_TIMESTAMP_CTRL1 0xfe000404
- CLKCTRL_TIMESTAMP_CTRL2 0xfe00040c
- CLKCTRL_TIMESTAMP_RD0 0xfe000410
- CLKCTRL_TIMESTAMP_RD1 0xfe000414

Amlogic Proprietary and Confidential
Copyright © Amlogic. All rights reserved.

- CLKCTRL_TIMEBASE_CTRL0 0xfe000418
- CLKCTRL_TIMEBASE_CTRL1 0xfe00041c
- CLKCTRL_EFUSE_CPU_CFG01 0xfe000480
- CLKCTRL_EFUSE_CPU_CFG2 0xfe000484
- CLKCTRL_EFUSE_ENCP_CFG0 0xfe000488
- CLKCTRL_EFUSE_MALI_CFG01 0xfe00048c
- CLKCTRL_EFUSE_HEVCB_CFG01 0xfe000490
- CLKCTRL_EFUSE_HEVCB_CFG2 0xfe000494
- CLKCTRL_EFUSE_LOCK 0xfe000498
- CLKCTRL_EFUSE_A73_CFG01 0xfe00049c
- CLKCTRL_EFUSE_A73_CFG2 0xfe0004a0

Register Description

Osc from XTAL pad will connect all PLL and some analog modules:

And it will gated by reg_oscin_ctrl;

Table 7-115 CLKCTRL_OSCIN_CTRL

Bit(s)	R/W	Default	Description
14	R/W	1	clock gate en; xtal -> HDMIPLL
13	R/W	1	Clock gate en Xtal -> sys1
12	R/W	1	clock gate en; xtal -> EARC
11	R/W	1	clock gate en; xtal -> PCIE_REFCLK_PLL
10	R/W	1	clock gate en; xtal -> ETH_PLL
9	R/W	1	clock gate en; xtal -> PCIECTRL/USBCTRL
8	R/W	1	clock gate en; xtal -> MCLK_PLL
7	R/W	1	clock gate en; xtal -> USB_PLL1
6	R/W	1	clock gate en; xtal -> USB_PLL0
5	R/W	1	clock gate en; xtal -> TCON0/1/2PLL
4	R/W	1	clock gate en; xtal -> PLL_TOP(FIXPLL/HIFIPLL/SYS0PLL/GP0PLL/GP1PLL)
3	R/W	1	Clock gate en: Xtal -> aud pll
1	R/W	1	clock gate en; xtal -> DDR_PLL

There are 4 vid_pll_clk used, as below table.

Amlogic Proprietary and Confidential
Copyright © Amlogic. All rights reserved.

Table 7-116 vid_pll_clk List

PLL source	Generate Clock	Control Register	Register Address
HDMI_PLL	hdmi_vid_pll_clk	CLKCTRL_VID_PLL_ CLK_DIV	0xfe000204
TCON_PLL0	vid_pll0_div_clk_out	COMBO_DPHY_VID_ PLL0_DIV	0xfe018008
TCON_PLL1	vid_pll1_div_clk_out	COMBO_DPHY_VID_ PLL1_DIV	0xfe01800c
TCON_PLL2	vid_pll2_div_clk_out	COMBO_DPHY_VID_ PLL2_DIV	0xfe018010

Table 7-117 CLKCTRL_VID_PLL_CLK_DIV/COMBO_DPHY_VID_PLL0/1/2_DIV

Bit(s)	R/W	Default	Description
31~24	R	0	RESERVED
23~20	R/W	0	Reserved
19	R/W	0	CLK_FINAL_EN
18	R/W	0	CLK_DIV1
17~16	R/W	0	CLK_SEL
15	R/W	0	SET_PRESET
14-0	R/W	0	SHIFT_PRESET

RTC clock is a low frequency clock which needn’t PLL.

it can generated by XTAL of from PAD.

Table 7-118 CLKCTRL_RTC_BY_OSCIN_CTRL0

Bit(s)	R/W	Default	Description
31	R/W	1	clock in gate en
30	R/W	1	clock out gate en
28	R/W	0	0: freq_out = freq_in / N0; 1: freq_out = freq_in/((N0*M0+N1*M1)/(M0+M1)) Because XTAL is 24MHz only, so it can’t generate some frequency like 32768Hz. If need 24KHz, set N0=1000 and this bit = 0, then rtc_clk = 24M/1000= 24KHz. If need 32768Hz, set N0=733, N1=732, M0 =2, M1=3, and this bit=1, then rtc_clk = 24M/(733*2+732*3)*(2+3)= 32768.9787Hz
23:12	R/W	‘d731	clock div N1, if you want div8, set to 7
11:0	R/W	‘d732	clock div N0, if you want div8, set to 7

Table 7-119 CLKCTRL_RTC_BY_OSCIN_CTRL1

Bit(s)	R/W	Default	Description
24	R/W	1	1: force clock_out = clock_in
23:12	R/W	‘d10	clock div M1, if you want div8, set to 7
11:0	R/W	‘d7	clock div M0, if you want div8, set to 7

Amlogic Proprietary and Confidential
Copyright © Amlogic. All rights reserved.

Table 7-120 CLKCTRL_RTC_CTRL

Bit(s)	R/W	Default	Description
31	R	0	mux1 sel o
30	R	0	mux0b sel o
29	R	0	mux0a sel o
1:0	R/W	0	cts_rtc_clk source select: 0: oscin; 1:rtc from oscin div(N0/N1); 2:rtc from PAD; 3:off;

Table 7-121 CLKCTRL_CHECK_CLK_RESULT

Bit(s)	R/W	Default	Description
2	R	0	cts_encp_clk frequency check result
1	R	0	cts_hevcb_clk frequency check result
0	R	0	cts_mali_clk frequency check result

Table 7-122 CLKCTRL_MBIST_ATSPEED_CTRL

Bit(s)	R/W	Default	Description
0	R/W	0	0: mbist clk will select oscine; 1: mbist clk will select cts_***_clk;

lock/prot are two different register, they all can lock one clk_ctrl register by different bit, the difference of lock/prot is lock can write 1 only and prot can write both 0 and 1.

Table 7-123 CLKCTRL_LOCK/PROT_BIT_REG0~3

bit	Reg0	Reg1	Reg2	Reg3
0	CLKCTRL_OSCIN_ CTRL	CLKCTRL_VIID_CLK_ CTRL	CLKCTRL_SYS_CLK_ EN1_REG1	
1		CLKCTRL_VIID_CLK_ DIV	CLKCTRL_SYS_CLK_ EN1_REG2	
2		CLKCTRL_VID_LOCK_ CLK_CTRL	CLKCTRL_SYS_CLK_ EN1_REG3	
3			CLKCTRL_RTC_BY_ OSCIN_CTRL0	
4			CLKCTRL_RTC_BY_ OSCIN_CTRL1	
5		CLKCTRL_SPICC_ CLK_CTRL	CLKCTRL_RTC_CTRL	
6		CLKCTRL_PWM_CLK_ AB_CTRL	CLKCTRL_RAMA_ CLK_CTRL0	
7	CLKCTRL_SC_CLK_ CTRL	CLKCTRL_PWM_CLK_ CD_CTRL	CLKCTRL_CLK12_24_ CTRL	

Amlogic Proprietary and Confidential
Copyright © Amlogic. All rights reserved.

bit	Reg0	Reg1	Reg2	Reg3
8	CLKCTRL_CECA_ CTRL0	CLKCTRL_PWM_CLK_ EF_CTRL	CLKCTRL_ANAKIN_ CLK_CTRL	
9	CLKCTRL_CECA_ CTRL1		CLKCTRL_SPICC_ CLK_CTRL1	
10	CLKCTRL_CECB_ CTRL0		CLKCTRL_SPICC_ CLK_CTRL2	
11	CLKCTRL_CECB_ CTRL1	CLKCTRL_ETH_CLK_ CTRL	CLKCTRL_	
12	CLKCTRL_TST_CTRL0		CLKCTRL_GDC_CLK_ CTRL	
13	CLKCTRL_TST_CTRL1	CLKCTRL_TS_CLK_ CTRL	CLKCTRL_AMLGDC_ CLK_CTRL	
14	CLKCTRL_MALI_CLK_ CTRL	CLKCTRL_TIME-STAMP_CTRL	CLKCTRL_MIPI_DSI_ MEAS_CLK_CTRL	
15	CLKCTRL_VDEC_ CLK_CTRL	CLKCTRL_TIME-STAMP_CTRL1	CLKCTRL_PWM_CLK_ AO_AB_CTRL	
16	CLKCTRL_VDEC2_ CLK_CTRL	CLKCTRL_TIME-STAMP_CTRL2	CLKCTRL_PWM_CLK_ AO_CD_CTRL	
17	CLKCTRL_VDEC3_ CLK_CTRL	CLKCTRL_TIMEBASE_ CTRL0	CLKCTRL_PWM_CLK_ AO_EF_CTRL	
18	CLKCTRL_VDEC4_ CLK_CTRL	CLKCTRL_TIMEBASE_ CTRL1	CLKCTRL_PWM_CLK_ AO_GH_CTRL	
19	CLKCTRL_MIPI_ISP_ CLK_CTRL	CLKCTRL_SAR_CLK_ CTRL0	CLKCTRL_VID_CLK0_ CTRL	
20	CLKCTRL_MIPI_CSI_ PHY_CLK_CTRL	CLKCTRL_DSPA_CLK_ CTRL0	CLKCTRL_VID_CLK0_ CTRL2	
21	CLKCTRL_VPU_CLK_ CTRL	CLKCTRL_DSPB_CLK_ CTRL0	CLKCTRL_VID_CLK0_ DIV	
22	CLKCTRL_VPU_ CLKC_CTRL	CLKCTRL_SYS_CLK_ CTRL0	CLKCTRL_VID_CLK1_ CTRL	
23	CLKCTRL_VAPBCLK_ CTRL	CLKCTRL_AXI_CLK_ CTRL0	CLKCTRL_VID_CLK1_ CTRL2	
24	CLKCTRL_VPU_CLKB_ CTRL	CLKCTRL_MBIST_AT-SPEED_CTRL	CLKCTRL_VID_CLK1_ DIV	
25	CLKCTRL_GEN_CLK_ CTRL	CLKCTRL_SYS_CLK_ VPU_EN0	CLKCTRL_VID_CLK2_ CTRL	
26	CLKCTRL_MIPIDSI_ PHY_CLK_CTRL	CLKCTRL_SYS_CLK_ VPU_EN1	CLKCTRL_VID_CLK2_ CTRL2	
27	CLKCTRL_VDIN_ MEAS_CLK_CTRL	CLKCTRL_SYS_CLK_ EN0_REG0	CLKCTRL_VID_CLK2_ DIV	
28	CLKCTRL_NAND_ CLK_CTRL	CLKCTRL_SYS_CLK_ EN0_REG1	CLKCTRL_HDMI_CLK_ CTRL	
29	CLKCTRL_SD_EMMC_ CLK_CTRL	CLKCTRL_SYS_CLK_ EN0_REG2	CLKCTRL_ENC_HDMI_ CLK_CTRL	
30	CLKCTRL_WAVE521_ CLK_CTRL	CLKCTRL_SYS_CLK_ EN0_REG3	CLKCTRL_ENC0_ HDMI_CLK_CTRL	

Amlogic Proprietary and Confidential
Copyright © Amlogic. All rights reserved.

bit	Reg0	Reg1	Reg2	Reg3
31	CLKCTRL_WAVE521_ CLK_CTRL2	CLKCTRL_SYS_CLK_ EN1_REG0	CLKCTRL_ENC2_ HDMI_CLK_CTRL	
96				CLKCTRL_HTX_CLK_ CTRL0
97				CLKCTRL_HTX_CLK_ CTRL1
98				CLKCTRL_HRX_CLK_ CTRL0
99				CLKCTRL_HRX_CLK_ CTRL1
100				CLKCTRL_HRX_CLK_ CTRL2
101				CLKCTRL_HRX_CLK_ CTRL3
102				CLKCTRL_VIID_CLK1_ CTRL
103				CLKCTRL_VIID_CLK1_ DIV
104				CLKCTRL_VIID_CLK2_ CTRL
105				CLKCTRL_VIID_CLK2_ DIV
106				CLKCTRL_HDMI_VID_ PLL_CLK_DIV

SYS_CLK is a system level clock, most of control bus and some data bus worked on this clock domain.

Table 7-124 CLKCTRL_SYS_CLK_CTRL0

Bit(s)	R/W	Default	Description
31	R	0	no glitch mux sel out, if it's not equal to sel in for long time, mean the FSM is dead because no clock in
29	R/W	0	pre_b clock gate en
28:26	R/W	0	pre_b source select: 0:cts_oscin_clk; 1:fclk_div2; 2:fclk_div3; 3:fclk_div4 4:fclk_div5 5:axi_clk_frcpu 7:cts_rtc_clk
25:16	R/W	0	pre_b div N, if you want div8, set to 7
15	R/W	0	no gilitch mux sel in 0: select pre_a; 1: select pre_b;
13	R/W	1	pre_a clock gate en

Amlogic Proprietary and Confidential
Copyright © Amlogic. All rights reserved.

Bit(s)	R/W	Default	Description
12:10	R/W	0	pre_a source select: 0:cts_oscin_clk; 1:fclk_div2; 2:fclk_div3; 3:fclk_div4 4:fclk_div5 5:axi_clk_frcpu 7:cts_rtc_clk
9:0	R/W	0	pre_a div N, if you want div8, set to 7

Each bit will enabled one user, if some bits are not defined, mean they are reserved.

En0 equivalent to en1.

Table 7-125 CLKCTRL_SYS_CLK_EN0_REG0~3/ CLKCTRL_SYS_CLK_EN1_REG0~3

bit	user	bit	user	bit	user	bit	user
127		95	Ts_gpu	63	i2c_m_b	31	ir_ctrl
126		94	gic	62	i2c_m_a	30	msr_clk
125		93		61	I2c_ao_b	29	spifc
124		92	sar_adc	60	I2c_m_ao_a	28	acodec
123		91		59	pciephy	27	smart-card
122		90		58	usb	26	sdemmc-C
121		89	vpu_intr	57		25	sdemmcB
120		88		56	pcie	24	sdemm-cA
119		87		55		23	Am2axi2
118		86	dspb	54	spicc1	22	Am2axi1
117		85	dspa	53	spicc0	21	Am2axi0
116		84	A73_pclk_sys_cpu_apb	52	ge2d	20	Ampipe_eth
115		83	Pclk_Sys_cpu_apb	51		19	ampipe_nand
114		82	rsa	50		18	deswarp
113		81	Mipi_isp_pclk	49	Spicc_5	17	gdc
112		80		48	ts_a53	16	cec
111		79		47	ts_a73	15	
110		78		46	Spicc_4	14	aucpu
109		77		45	Spicc_3	13	aocpu
108		76		44	Spicc_2	12	
107		75	mmc_pclk	43	aififo	11	

Amlogic Proprietary and Confidential
Copyright © Amlogic. All rights reserved.

106		74		42	uart_f	10	
105	pwm_ef	73	Hdmirx_ pclk	41	uart_e	9	
104	pwm_cd	72		40	uart_d	8	
103	pwm_ab	71	Hdmi20_ ace_clk	39	uart_c	7	
102	Pwm_ao_ gh	70		38	uart_b	6	mali
101	Pwm_ao_ef	69	i2c_s_a	37	uart_a	5	
100	Pwm_ao_ cd	68	hdmitx_pclk	36		4	ethphy
99	Pwm_ao_ ab	67	i2c_m_f	35	eth	3	mipi_dsi_b
98	Ts_hevc	66	i2c_m_e	34		2	mipi_dsi_a
97	Ts_vpu	65	i2c_m_d	33		1	dos
96	Ts_nna	64	i2c_m_c	32	audio	0	ddr

Table 7-126 CLKCTRL_SYS_CLK_VPU_EN0/ CLKCTRL_SYS_CLK_VPU_EN1 the same as CLKCTRL_SYS_CLK_EN0 & EN1, but it's connect to VPU and gate clock internal.

Bit(s)	R/W	Default	Description
0	R/W	1	TODO

Table 7-127 CLKCTRL_AXI_CLK_CTRL0

Bit(s)	R/W	Default	Description
31	R	0	no glitch mux sel out, if it's not equal to sel in for long time, mean the FSM is dead because no clock in
29	R/W	0	pre_b clock gate en
28:26	R/W	0	pre_b source select: 0:cts_oscin_clk; 1:fclk_div2; 2:fclk_div3; 3:fclk_div4 4:fclk_div5 5:axi_clk_frcpu 7:cts_rtc_clk
25:16	R/W	0	pre_b div N, if you want div8, set to 7
15	R/W	0	no gilitch mux sel in 0: select pre_a; 1: select pre_b;
13	R/W	1	pre_a clock gate en

Amlogic Proprietary and Confidential
Copyright © Amlogic. All rights reserved.

Bit(s)	R/W	Default	Description
12:10	R/W	0	pre_a source select: 0:cts_oscin_clk; 1:fclk_div2; 2:fclk_div3; 3:fclk_div4 4:fclk_div5 5:axi_clk_frcpu 7:cts_rtc_clk
9:0	R/W	0	pre_a div N, if you want div8, set to 7

There are 4 test sources can connect to PINMUX.

Each pin can select by 2bits of CLKCTRL_TST_CTRL0/1.

The test sources are listed as blow:

Table 7-128 CLKCTRL_TST_CTRL0/1

Test Source	Select	Default	src0	src1
TEST_OUT22	CTRL1[13:12]	3	nna[1]	
TEST_OUT21	CTRL1[11:10]	3	nna[0]	
TEST_OUT20	CTRL1[9:8]	3	rama	
TEST_OUT19	CTRL1[7:6]	3	ramb	
TEST_OUT18	CTRL1[5:4]	3	isp	
TEST_OUT17	CTRL1[3:2]	3	ddr1	
TEST_OUT16	CTRL1[1:0]	3	ddr0	
TEST_OUT15	CTRL0[31:30]	3	dos_wave[2]	
TEST_OUT14	CTRL0[29:28]	3	dos_wave[1]	
TEST_OUT13	CTRL0[27:26]	3	dos_wave[0]	
TEST_OUT12	CTRL0[25:24]	3	dos[3]	
TEST_OUT11	CTRL0[23:22]	3	dos[2]	
TEST_OUT10	CTRL0[21:20]	3	dos[1]	
TEST_OUT9	CTRL0[19:18]	3	dos[0]	A73[4]
TEST_OUT8	CTRL0[17:16]	3	vpu[2]	A73[3]
TEST_OUT7	CTRL0[15:14]	3	vpu[1]	A73[2]
TEST_OUT6	CTRL0[13:12]	3	vpu[0]	A73[1]
TEST_OUT5	CTRL0[11:10]	3	gpu[2]	A73[0]
TEST_OUT4	CTRL0[9:8]	3	gpu[1]	A53[4]
TEST_OUT3	CTRL0[7:6]	3	gpu[0]	A53[3]
TEST_OUT2	CTRL0[5:4]	3	dmc1	A53[2]
TEST_OUT1	CTRL0[3:2]	3	dmc0	A53[1]
TEST_OUT0	CTRL0[1:0]	3	dsp	A53[0]

Amlogic Proprietary and Confidential
Copyright © Amlogic. All rights reserved.

Table 7-129 CLKCTRL_CECA/B_CLK_CTRL0

Bit(s)	R/W	Default	Description
31	R/W	0	Gclk_in: 0:disable clk in;1:enable clk in;
30	R/W	0	Gclk_out: 0:disable clk out; 1: enable clk out;
29-28	R/W	0	Div_list_max: 0:only use clk_div0; 1:use clk_div0/clk_div1 in turn;
27-24	R/W	0	Reserved
23-12	R/W	0	Div_tcnt1: freq_clk_div1 = freq_clk_in/div_tcnt1;
11-0	R/W	0	Div_tcnt0: freq_clk_div0 = freq_clk_in/div_tcnt0;

Table 7-130 CLKCTRL_CECA/B_CLK_CTRL1

Bit(s)	R/W	Default	Description
31	R/W	0	clk_sel for cts_cec_clk 0: from clock divider 1: from cts_rtc_clk
30-25	R	0	Reserved
24	R/W	0	Divide_by_1: 1: clk_out = clk_in; 0: clk_out = clk_div0 or 1;
23-12	R/W	0	Cycle_tcnt1 After Cycle_tcnt1 times clk_div1, clk_out will equal clk_div0; Need set div_list_max = 1;
11-0	R/W	0	Cycle_tcnt0 After Cycle_tcnt0 times clk_div, clk_out will equal clk_div1; Need set div_list_max = 1;

Table 7-131 CLKCTRL_SC_CLK_CTRL

Bit(s)	R/W	Default	Description
Bit(s)	R/W	Default	Description
10:9	R/W	0	clk_sel for cts_sc_clk(smart card) 0: from fclk_div4; 1: from fclk_div3; 2: from fclk_div5; 3: from cts_oscin_clk;
8	R/W	0	clock enable
7:0	R/W	0	div N, if you want div8, set to 7
31	R	0	no glitch mux sel out, if it's not equal to sel in for long time, mean the FSM is dead because no clock in
29	R/W	0	pre_b clock gate en
28:26	R/W	0	pre_b source select: 0:cts_oscin_clk; 1:fclk_div2; 2:fclk_div3; 3:fclk_div4; 4:fclk_div5;

Amlogic Proprietary and Confidential
Copyright © Amlogic. All rights reserved.

Bit(s)	R/W	Default	Description
Bit(s)	R/W	Default	Description
			5:axi_clk_frcpu; 6:fclk_div7; 7:cts_rtc_clk;
25:16	R/W	0	pre_b div N, if you want div8, set to 7
15	R/W	0	no gilitch mux sel in 0: select pre_a; 1: select pre_b;
13	R/W	0	pre_a clock gate en
12:10	R/W	0	pre_a source select: 0:cts_oscin_clk; 1:fclk_div2; 2:fclk_div3; 3:fclk_div4; 4:fclk_div5; 5:axi_clk_frcpu; 6:fclk_div7; 7:cts_rtc_clk;
9:0	R/W	0	pre_a div N, if you want div8, set to 7

Table 7-132 CLKCTRL_DSPA/B_CLK_CTRL0

Bit(s)	R/W	Default	Description
31	R	0	no glitch mux sel out, if it's not equal to sel in for long time, mean the FSM is dead because no clock in
29	R/W	0	pre_b clock gate en
28:26	R/W	0	pre_b source select: 0:cts_oscin_clk; 1:fclk_div2p5; 2:fclk_div3; 3:fclk_div5 4:hifi_pll 5:fclk_div4 6:fclk_div7 7:cts_rtc_clk
25:16	R/W	0	pre_b div N, if you want div8, set to 7
15	R/W	0	no gilitch mux sel in 0: select pre_a; 1: select pre_b;
13	R/W	0	pre_a clock gate en
12:10	R/W	0	pre_a source select: 0:cts_oscin_clk; 1:fclk_div2p5; 2:fclk_div3; 3:fclk_div5 4:hifi_pll 5:fclk_div4 6:fclk_div7 7:cts_rtc_clk
9:0	R/W	0	pre_a div N, if you want div8, set to 7

Amlogic Proprietary and Confidential
Copyright © Amlogic. All rights reserved.

Table 7-133 CLKCTRL_CLK12_24_CTRL

Bit(s)	R/W	Default	Description
19~13	R/	0	RESERVED

12	R/W	0	crt_clk25_en; for CLK25M(refer to pinmux define)
			set 1 :CLK25M = 2GHz/ clk25_div;
			set 0 : CLK25M = 0;

11	R/W	0	crt_clk24_en; for CLK12M_24M(refer to pinmux define)
			set 1 :CLK12M_24M = 24M;
			set 0 : CLK12M_24M = 0;

10	R/W	0	clk24_div2_en; for CLK12M_24M(refer to pinmux define)
			need set crt_clk24_en = 1 first;
			set 1 :CLK12M_24M = 12M;
			set 0 : CLK12M_24M = 24M;

7:0	R/W	0	clk25_div; for CLK25M(refer to pinmux define) if need 8, set as 7; if set 0, will div2; etc: set 79, CLK25M = 2000MHz/80=25MHz;

Table 7-134 CLKCTRL_VID_CLK_DIV/CTRL/CTRL2 + CLKCTRL_VIID_CLK_DIV/CTRL +CLKCTRL_HDMI_CLK_CTRL

Bit(s)	R/W	Default	Description
31-21	R/W	0	TCON_CLK0_CTRL
20	R/W	0	CLK_EN1
19	R/W	0	CLK_EN0
18-16	R/W	0	CLK_IN_SEL
15	R/W	0	SOFT_RESET
14	R/W	0	PH23_ENABLE
13	R/W	0	DIV12_PH23
12-5	R/W	0	UNUSED
4	R/W	0	DIV12_EN
3	R/W	0	DIV6_EN
2	R/W	0	DIV4_EN
1	R/W	0	DIV2_EN
0	R/W	0	DIV1_EN

Table 7-135 CLKCTRL_VID_CLK1/2_CTRL2

Bit(s)	R/W	Default	Description
31-17	R/W	0	
15-9	R/W	0	Reserved
10	R/W	1	Gclk_hdmi_tx_pnx_clk
9	R/W	1	Gclk_hdmi_tx_fe_clk
8	R/W	0	Atv demod vdac gated clock control

Amlogic Proprietary and Confidential
Copyright © Amlogic. All rights reserved.

Bit(s)	R/W	Default	Description
7	R/W	1	LCD_AN_CLK_PHY2 gated clock control. 1 = enable
6	R/W	1	LCD_AN_CLK_PH3 gated clock control
5	R/W	1	HDMI_TX_PIXEL_CLK gated clock control
4	R/W	1	VDAC_clk gated clock control
3	R/W	1	ENCL gated clock control
2	R/W	1	ENCP gated clock control
1	R/W	1	ENCT gated clock control
0	R/W	1	ENCI gated clock control

Table 7-136 CLKCTRL_VID_CLK0_CTRL2

Bit(s)	R/W	Default	Description
31-17	R/W	0	
16	R/W	0	Cts_enc0_if_clk div 0:div1 1:div2
15-9	R/W	0	Reserved
10	R/W	1	Gclk_hdmi_tx_pnx_clk
9	R/W	1	Gclk_hdmi_tx_fe_clk
8	R/W	0	Atv demod vdac gated clock control
7	R/W	1	LCD_AN_CLK_PHY2 gated clock control. 1 = enable
6	R/W	1	LCD_AN_CLK_PH3 gated clock control
5	R/W	1	HDMI_TX_PIXEL_CLK gated clock control
4	R/W	1	VDAC_clk gated clock control
3	R/W	1	ENCL gated clock control
2	R/W	1	ENCP gated clock control
1	R/W	1	ENCT gated clock control
0	R/W	1	ENCI gated clock control

Table 7-137 CLKCTRL_VID_CLK0/1/2_DIV

Bit(s)	R/W	Default	Description
31-28	R/W	0	ENCI_CLK_SEL
27-24	R/W	0	ENCP_CLK_SEL
23-20	R/W	0	ENCT_CLK_SEL
19-18	R/W	0	UNUSED
17	R/W	0	CLK_DIV_RESET
16	R/W	0	CLK_DIV_EN

Amlogic Proprietary and Confidential
Copyright © Amlogic. All rights reserved.

Bit(s)	R/W	Default	Description
15-8	R/W	1	XD1
7-0	R/W	1	XD0

Table 7-138 CLKCTRL_VIID_CLK0/1/2_CTRL

Bit(s)	R/W	Default	Description
31-20	R/W	0	Unused
19	R/W	0	V2_cntl_clk_en0
18-16	R/W	0	V2_cntl_clk_in_sel
15	R/W	0	V2_cntl_soft_reset
14-5	R/W	0	Unused
4	R/W	0	V2_cntl_div12_en
3	R/W	0	V2_cntl_div6_en
2	R/W	0	V2_cntl_div4_en
1	R/W	0	V2_cntl_div2_en
0	R/W	0	V2_cntl_div1_en

Table 7-139 CLKCTRL_VIID_CLK0/1/2_DIV

Bit(s)	R/W	Default	Description
31-28	R/W	0	DAC0_CLK_SEL
27-24	R/W	0	DAC1_CLK_SEL
23-20	R/W	0	DAC2_CLK_SEL
19	R/W	0	Select adc_pll_clk_b2 to be cts_clk_vdac
18	R/W	0	Unused
17	R/W	0	V2_cntl_clk_div_reset
16	R/W	0	V2_cntl_clk_div_en
15-12	R/W	0	Encl_clk_sel
14-8	R/W	0	Unused
7-0	R/W	0	V2_cntl_xd0

Table 7-140 CLKCTRL_HDMI_CLK_CTRL

Bit(s)	R/W	Default	Description
31-20	R/W	0	Reserved
19~16	R/W	0	Reserved
15~11	R/W	0	Reserved
10~9	R/W	0	CLK_SEL: 0:oscin; 1:fclk_div4;

Amlogic Proprietary and Confidential
Copyright © Amlogic. All rights reserved.

Bit(s)	R/W	Default	Description
			2:fclk_div3; 3:fclk_div5;
8	R/W	0	CLK_EN:
7	R/W	0	Reserved
6-0	R/W	0	div N, if you want div8, set to 7

Table 7-141 CLKCTRL_VID_LOCK_CLK_CTRL

Bit(s)	R/W	Default	Description
31~10	R/W	0	reserved
9-8	R/W	0	Clk_sel: 0:cts_oscin_clk 1:cts_encl_clk 2:cts_enci_clk 3:cts_encp_clk
7	R/W	0	Clk_en
6-0	R/W	0	div N, if you want div8, set to 7

Table 7-142 CLKCTRL_ETH_CLK_CTRL

Bit(s)	R/W	Default	Description
16	R/W	0	invert clk_rmii_pad_i
13	R/W	0	invert clk_rmii_pad_o
12	R/W	0	clk_rmii_pad_o; 0: rmii_clk; 1: rmii_div2;
11:9	R/W	0	rmii_clk; clk_sel; 0: fclk_div2; 7: clk_rmii_pad_i;
8	R/W	0	rmii_clk; clk_en
7	R/W	0	eth_clk125M; clk_en;
6:0	R/W	0	rmii_clk; div N, if you want div8, set to 7

This following clock is generated for temp sensor.

Table 7-143 CLKCTRL_TS_CLK_CTRL

Bit(s)	R/W	Default	Description
8	R/W	0	cts_ts_clk clk_en
7:0	R/W	0	cts_ts_clk div N, if you want div8, set to 7

Amlogic Proprietary and Confidential
Copyright © Amlogic. All rights reserved.

Table 7-144 CLKCTRL_MALI_CLK_CTRL

Bit(s)	R/W	Default	Description
31	R/W	0	final mux; 0: select mux_a; 1: select mux_b;
30-28	R/W	0	Reserved
27~25	R/W	0	mux_b CLK_SEL: 0: cts_oscin_clk 1: gp0_pll 2: hifi_pll 3: fclk_div2p5 4: fclk_div3 5: fclk_div4 6: fclk_div5 7: fclk_div7
24	R/W	0	mux_b CLK_EN:
23	R/W	0	Reserved
22~16	R/W	0	mux_b div N, if you want div8, set to 7:
15~12	R/W	0	Reserved
11~9	R/W	0	mux_a CLK_SEL: 0: cts_oscin_clk 1: gp0_pll 2: hifi_pll 3: fclk_div2p5 4: fclk_div3 5: fclk_div4 6: fclk_div5 7: fclk_div7
8	R/W	0	mux_a CLK_EN:
7	R/W	0	Reserved
6-0	R/W	0	mux_a div N, if you want div8, set to 7:

CLKCTRL_VDEC/2/3/4_CLK_CTRL

Table 7-145 CLKCTRL_VDEC_CLK_CTRL

Bit(s)	R/W	Default	Description
31-28	R/W	0	Reserved
27~25	R/W	0	cts_hcodec_clk, mux_a CLK_SEL: 0:fclk_div2p5; 1:fclk_div3; 2:fclk_div4; 3:fclk_div5; 4:fclk_div7; 5:hifi_pll; 6:gp0pll; 7:oscin;
24	R/W	0	cts_hcodec_clk, mux_a

Amlogic Proprietary and Confidential
Copyright © Amlogic. All rights reserved.

Bit(s)	R/W	Default	Description
			CLK_EN:
23	R/W	0	Reserved
22~16	R/W	0	cts_hcodec_clk, mux_a div N, if you want div8, set to 7:
15~12	R/W	0	Reserved
11~9	R/W	0	cts_vdec_clk, mux_a CLK_SEL: 0:fclk_div2p5; 1:fclk_div3; 2:fclk_div4; 3:fclk_div5; 4:fclk_div7; 5:hifi_pll; 6:gp0pll; 7:oscin;
8	R/W	0	cts_vdec_clk, mux_a CLK_EN:
7	R/W	0	Reserved
6-0	R/W	0	cts_vdec_clk, mux_a div N, if you want div8, set to 7:

Table 7-146 *CLKCTRL_VDEC2_CLK_CTRL

Bit(s)	R/W	Default	Description
31-28	R/W	0	Reserved
27~25	R/W	0	cts_hevcb_clk, mux_a: 0:fclk_div2p5; 1:fclk_div3; 2:fclk_div4; 3:fclk_div5; 4:fclk_div7; 5:hifi_pll; 6:gp0pll; 7:oscin;
24	R/W	0	cts_hevcb_clk, mux_a: CLK_EN:
23	R/W	0	Reserved
22~16	R/W	0	cts_hevcb_clk, mux_a: div N, if you want div8, set to 7:
15~12			Reserved
11~9	R/W	0	cts_hevcf_clk, mux_a: CLK_SEL: 0:fclk_div2p5; 1:fclk_div3; 2:fclk_div4; 3:fclk_div5; 4:fclk_div7; 5:hifi_pll; 6:gp0pll; 7:oscin;
8	R/W	0	cts_hevcf_clk, mux_a: CLK_EN:

Amlogic Proprietary and Confidential
Copyright © Amlogic. All rights reserved.

Bit(s)	R/W	Default	Description
7	R/W	0	Reserved
6-0	R/W	0	cts_hevcf_clk, mux_a: div N, if you want div8, set to 7:

Table 7-147 CLKCTRL_VDEC3_CLK_CTRL

Bit(s)	R/W	Default	Description
31	R/W	1	cts_hcodec_clk 0: sel mux_a; 1: sel mux_b;
27~25	R/W	0	cts_hcodec_clk, mux_b CLK_SEL: 0:fclk_div2p5; 1:fclk_div3; 2:fclk_div4; 3:fclk_div5; 4:fclk_div7; 5:hifi_pll; 6:gp0pll; 7:oscin;
24	R/W	0	cts_hcodec_clk, mux_b CLK_EN:
23	R/W	0	Reserved
22~16	R/W	0	cts_hcodec_clk, mux_b div N, if you want div8, set to 7:
15	R/W	1	cts_vdec_clk 0: sel mux_a 1: sel mux_b
11~9	R/W	0	cts_vdec_clk, mux_b CLK_SEL: 0:fclk_div2p5; 1:fclk_div3; 2:fclk_div4; 3:fclk_div5; 4:fclk_div7; 5:hifi_pll; 6:gp0pll; 7:oscin;
8	R/W	0	cts_vdec_clk, mux_b CLK_EN:
7	R/W	0	Reserved
6-0	R/W	0	cts_vdec_clk, mux_b div N, if you want div8, set to 7:

Table 7-148 CLKCTRL_VDEC4_CLK_CTRL

Bit(s)	R/W	Default	Description
31	R/W	1	cts_hevcb_clk 0: use mux_a 1: use mux_b
27~25	R/W	0	cts_hevcb_clk, mux_b: CLK_SEL:

Amlogic Proprietary and Confidential
Copyright © Amlogic. All rights reserved.

Bit(s)	R/W	Default	Description
			0:fclk_div2p5; 1:fclk_div3; 2:fclk_div4; 3:fclk_div5; 4:fclk_div7; 5:hifi_pll; 6:gp0pll; 7:oscin;
24	R/W	0	cts_hevcb_clk, mux_b: CLK_EN:
23	R/W	0	Reserved
22~16	R/W	0	cts_hevcb_clk, mux_b: div N, if you want div8, set to 7:
15	R/W	1	cts_hevcf_clk: 0: use mux_a; 1: use mux_b;
11~9	R/W	0	cts_hevcf_clk, mux_b: CLK_SEL: 0:fclk_div2p5; 1:fclk_div3; 2:fclk_div4; 3:fclk_div5; 4:fclk_div7; 5:hifi_pll; 6:gp0pll; 7:oscin;
8	R/W	0	cts_hevcf_clk, mux_b: CLK_EN:
7	R/W	0	Reserved
6-0	R/W	0	cts_hevcf_clk, mux_b: div N, if you want div8, set to 7:

Table 7-149 CLKCTRL_WAVE521_CLK_CTRL

Bit(s)	R/W	Default	Description
27:25	R/W	0	Wave521_cclk clk_sel; 0:oscin; 1:fclk_div4; 2:fclk_div3; 3:fclk_div5; 4:fclk_div7; 5:mpll2; 6:mpll3; 7:gp0pll;
24	R/W	0	Wave521_cclk clk_en
22:16	R/W	0	Wave521_cclk div N, if you want div8, set to 7
11:9	R/W	0	Wave521_bclk clk_sel; 0:oscin; 1:fclk_div4; 2:fclk_div3; 3:fclk_div5; 4:fclk_div7; 5:mpll2; 6:mpll3; 7:gp0pll;

Amlogic Proprietary and Confidential
Copyright © Amlogic. All rights reserved.

Bit(s)	R/W	Default	Description
8	R/W	0	Wave521_bclk clk_en
6:0	R/W	0	Wave521_bclk div N, if you want div8, set to 7

Table 7-150 CLKCTRL_WAVE521_CLK_CTRL2

Bit(s)	R/W	Default	Description
11:9	R/W	0	Wave521_aclk clk_sel; 0:oscin; 1:fclk_div4; 2:fclk_div3; 3:fclk_div5; 4:fclk_div7; 5:mpll2; 6:mpll3; 7:gp0pll;
8	R/W	0	Wave521_aclk clk_en
6:0	R/W	0	Wave521_aclk div N, if you want div8, set to 7

Table 7-151 CLKCTRL_VPU_CLK_CTRL

Bit(s)	R/W	Default	Description
31	R/W	0	Final mux sel 0: use mux_a 1: use mux_b
30-29	R/W	0	Reserved
27~25	R/W	0	mux_b CLK_SEL: 0:fclk_div3; 1:fclk_div4; 2:fclk_div5; 3:fclk_div7; 4:mpll1; 5:vid_pll; 6:hifi_pll; 7:gp0_pll;
24	R/W	0	mux_b CLK_EN:
23	R/W	0	Reserved
22~16	R/W	0	mux_b div N, if you want div8, set to 7:
11~9	R/W	0	mux_a CLK_SEL: 0:fclk_div3; 1:fclk_div4; 2:fclk_div5; 3:fclk_div7; 4:mpll1; 5:vid_pll; 6:hifi_pll; 7:gp0_pll;
8	R/W	0	mux_a CLK_EN:
7	R/W	0	Reserved
6-0	R/W	0	mux_a div N, if you want div8, set to 7:

Amlogic Proprietary and Confidential
Copyright © Amlogic. All rights reserved.

Table 7-152 CLKCTRL_VPU_CLKB_CTRL

Bit(s)	R/W	Default	Description
31-25	R/W	0	Reserved
24	R/W	0	Cts_vpu_clkb_tmp en
21-20	R/W	0	Cts_vpu_clkb_tmp sel 0:cts_vpu_clk 1:fclk_div4 2:fclk_div5 3:fclk_div7
19-16	R/W	0	Cts_vpu_clkb_tmp div
9	R/W	0	Vpu_clkb_latch_en
8	R/W	0	Vpu_clkb_en
7-0	R/W	0	Vpu_clkb_div

Table 7-153 CLKCTRL_VPU_CLKC_CTRL

Bit(s)	R/W	Default	Description
31	R/W	1	Final mux sel 0:mux_a 1:mux_b
30-29	R/W	0	Reserved
27~25	R/W	0	mux_b CLK_SEL: 0:fclk_div4; 1:fclk_div3; 2:fclk_div5; 3:fclk_div7; 4:mpll1; 5:vid_pll; 6:mpll2; 7:gp0pll;
24	R/W	0	mux_b CLK_EN:
23	R/W	0	Reserved
22~16	R/W	0	mux_b div N, if you want div8, set to 7:
15~12			
11~9	R/W	0	mux_a CLK_SEL: 0:fclk_div4; 1:fclk_div3; 2:fclk_div5; 3:fclk_div7; 4:mpll1; 5:vid_pll; 6:mpll2; 7:gp0pll;
8	R/W	0	mux_a CLK_EN:
7	R/W	0	Reserved
6-0	R/W	0	mux_a div N, if you want div8, set to 7:

Amlogic Proprietary and Confidential
Copyright © Amlogic. All rights reserved.

Table 7-154 CLKCTRL_VAPBCLK_CTRL

Bit(s)	R/W	Default	Description
31	R/W	0	Final mux sel 0:mux_a 1:mux_b
30	R/W	0	cts_ge2d_clk enable
29	R/W	0	Reserved
27~25	R/W	0	mux_b CLK_SEL: 0:fclk_div4; 1:fclk_div3; 2:fclk_div5; 3:fclk_div7; 4:mpll1; 5:vid_pll; 6:mpll2; 7:fclk_div2p5;
24	R/W	0	mux_b CLK_EN:
23	R/W	0	Reserved
22~16	R/W	0	mux_b div N, if you want div8, set to 7:
15~12			
11~9	R/W	0	mux_a CLK_SEL: 0:fclk_div4; 1:fclk_div3; 2:fclk_div5; 3:fclk_div7; 4:mpll1; 5:vid_pll; 6:mpll2; 7:fclk_div2p5;
8	R/W	0	mux_a CLK_EN:
7	R/W	0	Reserved
6-0	R/W	0	mux_a div N, if you want div8, set to 7:

Table 7-155 CLKCTRL_HDCP22_CTRL

Bit(s)	R/W	Default	Description
26-25	R/W	0	cts_hdcp22_skpclk Clk_sel: 0:cts_oscin_clk 1:fclk_div4 2:fclk_div3 3:fclk_div5
24	R/W	0	cts_hdcp22_skpclk Clk_en
22:16	R/W	0	cts_hdcp22_skpclk div N, if you want div8, set to 7
10:9	R/W	0	cts_hdcp22_esmclk Clk_sel: 0:fclk_div7 1:fclk_div4 2:fclk_div3

Amlogic Proprietary and Confidential
Copyright © Amlogic. All rights reserved.

Bit(s)	R/W	Default	Description
			3:fclk_div5
8	R/W	0	cts_hdcp22_esmclk Clk_en
6:0	R/W	0	cts_hdcp22_esmclk div N, if you want div8, set to 7

Table 7-156 CLKCTRL_VDIN_MEAS_CLK_CTRL

Bit(s)	R/W	Default	Description
11-9	R/W	0	cts_vdin_meas_clk CLK_SEL: 0:oscin; 1:fclk_div4; 2:fclk_div3; 3:fclk_div5; 4:vid_pll;
8	R/W	0	cts_vdin_meas_clk CLK_EN:
6:0	R/W	0	cts_vdin_meas_clk div N, if you want div8, set to 7

Table 7-157 CLKCTRL_NAND_CLK_CTRL

Bit(s)	R/W	Default	Description
31-12	R/W	0	unused
11-9	R/W	0	CLK_SEL: 0:cts_oscin_clk 1:fclk_div2 2:fclk_div3 3:hifi_pll_clk 4:fclk_div2p5 5:mp2_clk_out 6:mp3_clk_out 7:gp0_pll_clk
8			Reserved
7	R/W	1	CLK_EN:
6-0	R/W	0	div N, if you want div8, set to 7

Table 7-158 CLKCTRL_SD_EMMC_CLK_CTRL

Bit(s)	R/W	Default	Description
31-28	R/W	0	unused
27-25	R/W	0	Sd_emmc_B_CLK_SEL: 0:cts_oscin_clk 1:fclk_div2 2:fclk_div3 3:hifi_pll_clk 4:fclk_div2p5 5:mp2_clk_out 6:mp3_clk_out 7:gp0_pll_clk

Amlogic Proprietary and Confidential
Copyright © Amlogic. All rights reserved.

Bit(s)	R/W	Default	Description
24	R/W		Reserved
23	R/W	1	Sd_emmc_B_CLK_EN:
22-16	R/W	0	Sd_emmc_B_CLK div N, if you want div8, set to 7
15-12	R/W	0	reseverd
11-9	R/W	0	Sd_emmc_A_CLK_SEL: 0:cts_oscin_clk 1:fclk_div2 2:fclk_div3 3:hifi_pll_clk 4:fclk_div2p5 5:mp2_clk_out 6:mp3_clk_out 7:gp0_pll_clk
8	R/W		Reserved
7	R/W	1	Sd_emmc_A_CLK_EN:
6-0	R/W	0	Sd_emmc_A_CLK div N, if you want div8, set to 7

Table 7-159 CLKCTRL_SPICC_CLK_CTRL

Bit(s)	R/W	Default	Description
25:23	R/W	0	spicc_1_clk clk_sel 0:osc; 1:sys_clk; 2:fclk_div4; 3:fclk_div3; 4:fclk_div2; 5:fclk_div5; 6:fclk_div7; 7:gp0_pll;
22	R/W	0	spicc_1_clk clk_en
21:16	R/W	0	spicc_1_clk div N, if you want div8, set to 7
9:7	R/W	0	spicc_0_clk clk_sel 0:osc; 1:sys_clk; 2:fclk_div4; 3:fclk_div3; 4:fclk_div2; 5:fclk_div5; 6:fclk_div7; 7:gp0_pll;
6	R/W	0	spicc_0_clk clk_en
5:0	R/W	0	spicc_0_clk div N, if you want div8, set to 7

Amlogic Proprietary and Confidential
Copyright © Amlogic. All rights reserved.

Table 7-160 CLKCTRL_PWM_CLK_(AO_)_CTRL**

Bit(s)	R/W	Default	Description
26:25	R/W	0	cts_pwm_j/h/f/d/b_clk clk_sel: 0: osin 1: vid_pll 2: fclk_div4 3: fclk_fiv3
24	R/W	0	cts_pwm_j/h/f/d/b_clk clk_en
23:16	R/W	0	cts_pwm_j/h/f/d/b_clk div N, if you want div8, set to 7
10:9	R/W	0	cts_pwm_i/g/e/c/a_clk clk_sel: 0: osin 1: vid_pll 2: fclk_div4 3: fclk_fiv3
8	R/W	0	cts_pwm_i/g/e/c/a_clk clk_en
7:0	R/W	0	cts_pwm_i/g/e/c/a_clk div N, if you want div8, set to 7

Table 7-161 CLKCTRL_SAR_CLK_CTRL0

Bit(s)	R/W	Default	Description
10:9	R/W	0	clk_sel: 0: osin 1: cts_sys_clkl
8	R/W	0	clk_en
7:0	R/W	0	div N, if you want div8, set to 7

Amlogic Proprietary and Confidential
Copyright © Amlogic. All rights reserved.

Table 7-162 CLKCTRL_GEN_CLK_CTRL

Bit(s)	R/W	Default	Description
16:12	R/W	0	gen_clk source select 0: cts_oscin_clk; 1:cts_rtc_clk; 2:sys_pll_div16; 3:ddr_pll_div32 4: vid_pll 5: gp0_pll 6: gp1_pll 7: hifi_pll 8: pcie_ref_pll_n 9: pcie_ref_pll_p 12:clk_msr_src(select from all internal clock except PLLs); 16: ACODEC_DAC1 17: sys_cpu_clk_div16 19: fclk_div2 20: fclk_div2p5 21: fclk_div3 22: fclk_div4 23: fclk_div5 24: fclk_div7 25: mpll0 26: mpll1 27: mpll2 28: mpll3
11	R/W	0	gen_clk gate en
10:0	R/W	0	gen_clk div N, if you want div8, set to 7

Table 7-163 CLKCTRL_TIMESTAMP_CTRL0

Bit(s)	R/W	Default	Description
14	R/W	0	1: hold count val;
13	R/W	0	1: force count val = {ctrl2,ctrl1}
12	R/W	1	enable
11:10	R/W	0	clk source sel: 0:cts_oscin_clk; 1:cts_rtc_clk; 2:cts_sys_clk; 3:axi_clk;
9	R/W	1	clk gate en
8:0	R/W	23	clk div N, if you want div8, set to 7

Table 7-164 CLKCTRL_TIMESTAMP_CTRL1

Bit(s)	R/W	Default	Description
31-0	R/W	0	force value[31:0]

Table 7-165 CLKCTRL_TIMESTAMP_CTRL2

Bit(s)	R/W	Default	Description
31-0	R/W	0	force value[63:32]

Amlogic Proprietary and Confidential
Copyright © Amlogic. All rights reserved.

Table 7-166 CLKCTRL_TIMESTAMP_VAL0

Bit(s)	R/W	Default	Description
31-0	R/W	0	count val [31:0], need update by write any value first

Table 7-167 CLKCTRL_TIMESTAMP_VAL1

Bit(s)	R/W	Default	Description
31-0	R	0	count val [63:32], need update by write val0 register any value first

Table 7-168 CLKCTRL_TIMEBASE_CTRL0

Bit(s)	R/W	Default	Description
31:24	R/W	0	N1, if you want div8, set to 8
23:19	R/W	0	N2, if you want div8, set to 8
18	R/W	0	1: enable xtal(24M) tick
17	R/W	1	Crystal clock enable.
16	R/W	0	Soft Reset
15:14	R/W	0	1MS_TICK: 0 = use (100US_TICK/10), 1 = hold to 1, 2 = use counter1, 3 = use counter 2
13:12	R/W	0	100US_TICK: 0 = use (10US_TICK/10), 1 = hold to 1, 2 = use counter1, 3 = use counter 2
11:10	R/W	0	10US_TICK: 0 = use (1US_TICK/10), 1 = hold to 1, 2 = use counter1, 3 = use counter 2
9:8	R/W	0	1US_TICK: 0 = use (Crystal/XTAL_DIV), 1 = hold to 1, 2 = use counter1, 3 = use counter 2
7:6	R/W	0	XTAL_DIV3_TICK: 0 = use Crystal/3, 1 = hold to 1, 2 = use counter1, 3 = use counter 2
5:0	R/W	24	XTAL_DIV, if you want div24000, set to 24

Table 7-169 CLKCTRL_TIMEBASE_CTRL1

Bit(s)	R/W	Default	Description
1	R/W	0	1: sync xtal_div2 by fall edge of xtal;
0	R/W	0	1: enable xtal_div2(12M) tick

Table 7-170 CLKCTRL_EFUSE_CPU_CFG01

Bit(s)	R/W	Default	Description
31:16	R/W	0xffff	efuse lock a53 clk cfg1; cfg1 must < cfg0;
15:0	R/W	0xffff	efuse lock a53 clk cfg0;

Amlogic Proprietary and Confidential
Copyright © Amlogic. All rights reserved.

Table 7-171 CLKCTRL_EFUSE_CPU_CFG2

Bit(s)	R/W	Default	Description
15:0	R/W	0xffff	efuse lock a53 clk cfg2; cfg2 must < cfg1;

Table 7-172 CLKCTRL_EFUSE_ENCP_CFG0

Bit(s)	R/W	Default	Description
15:0	R/W	0xffff	efuse lock cts_encp_clk cfg0

Table 7-173 CLKCTRL_EFUSE_MALI_CFG01

Bit(s)	R/W	Default	Description
31:16	R/W	0xffff	efuse lock cts_mali_clk cfg1, cfg1 must < cfg0
15:0	R/W	0xffff	efuse lock cts_mali_clk cfg0

Table 7-174 CLKCTRL_EFUSE_HEVCB_CFG01

Bit(s)	R/W	Default	Description
31:16	R/W	0xffff	efuse lock cts_hevcb_clk cfg1, cfg1 must < cfg0
15:0	R/W	0xffff	efuse lock cts_hevcb_clk cfg0

Table 7-175 CLKCTRL_EFUSE_HEVCB_CFG2

Bit(s)	R/W	Default	Description
15:0	R/W	0xffff	efuse lock cts_hevcb_clk cfg2, cfg2 must < cfg1

Table 7-176 CLKCTRL_EFUSE_A73_CFG01

Bit(s)	R/W	Default	Description
31:16	R/W	0xffff	efuse lock a73 clk cfg1; cfg1 must < cfg0;
15:0	R/W	0xffff	efuse lock a73 clk cfg0;

Table 7-177 CLKCTRL_EFUSE_A73_CFG2

Bit(s)	R/W	Default	Description
15:0	R/W	0xffff	efuse lock a73 clk cfg2; cfg2 must < cfg1;

Table 7-178 CLKCTRL_EFUSE_LOCK

Bit(s)	R/W	Default	Description
3	R/W	0	lock EFUSE_HEVCB_CFG01/2
2	R/W	0	lock EFUSE_MALI_CFG01

Amlogic Proprietary and Confidential
Copyright © Amlogic. All rights reserved.

Bit(s)	R/W	Default	Description
1	R/W	0	lock EFUSE_ENCP_CFG0
0	R/W	0	lock EFUSE_CPU_CFG01/2

Table 7-179 CLKCTRL_MIPI_ISP_PHY_CLK_CTRL

Bit(s)	R/W	Default	Description
31	R	1	mux sel out,
24	R/W	0	Mux1 clock gate en
27:25	R/W	0	Mux1 source select: 0:cts_oscin_clk; 1:gp0_pll_clk; 2:mp1_clk; 3:mp2_clk 4:fclk_div3 5:fclk_div4 6:fclk_div5 7:fclk_div7
22:16	R/W	0	Mux1 div N, if you want div8, set to 7
8	R/W	1	Mux0 clock gate en
11:9	R/W	0	Mux0 source select: 0:cts_oscin_clk; 1:gp0_pll_clk; 2:mp1_clk; 3:mp2_clk 4:fclk_div3 5:fclk_div4 6:fclk_div5 7:fclk_div7
6:0	R/W	0	Mux0 div N, if you want div8, set to 7

Table 7-180 CLKCTRL_MIPIDSI_PHY_CLK_CTRL

Bit(s)	R/W	Default	Description
27-25	R/W	0	cts_dsi1_phy_clkl: 0:vid_pll1_clk 1:gp1_pll_clk 2:hifi_pll 3:mp1_clk 4:fclk_div2 5:fclk_div2p5 6:fclk_div3 7:fclk_div7
24	R/W	0	cts_dsi1_phy_clklClk_en
22:16	R/W	0	cts_dsi1_phy_clkl div N, if you want div8, set to 7
14:12	R/W	0	cts_dsi0_phy_clkl: 0:vid_pll1_clk 1:gp1_pll_clk 2:hifi_pll 3:mp1_clk 4:fclk_div2 5:fclk_div2p5

Amlogic Proprietary and Confidential
Copyright © Amlogic. All rights reserved.

Bit(s)	R/W	Default	Description
			6:fclk_div3 7:fclk_div7
8	R/W	0	cts_dsi0_phy_clkl Clk_en
6:0	R/W	0	cts_dsi0_phy_clkl div N, if you want div8, set to 7

Table 7-181 CLKCTRL_ANAKIN_CLK_CTRL

Bit(s)	R/W	Default	Description
31	R/W	1	Final_mux_sel
30	R/W	0	Clk_en
27-25	R/W	0	cts_anakin_clkl: 0:fclk_div4 1:fclk_div3 2:fclk_div5 3fclk_div2 4:mp1_clk 5:vid_pll1_clk 6mp2_clk 7:fclk_div2p5
24	R/W	0	cts_anakin_mux1_Clk_en
22:16	R/W	0	cts_anakin_mux1_Clk div N, if you want div8, set to 7
11:9	R/W	0	cts_anakin_clkl: 0:fclk_div4 1:fclk_div3 2:fclk_div5 3fclk_div2 4:mp1_clk 5:vid_pll1_clk 6mp2_clk 7:fclk_div2p5
8	R/W	0	cts_anakin_mux0_Clk_en
6:0	R/W	0	cts_anakin_mux0_Clk div N, if you want div8, set to 7

Table 7-182 CLKCTRL_GDC_CLK_CTRL

Bit(s)	R/W	Default	Description
31	R/W	1	Final_mux_sel
30	R/W	0	Clk_en
27-25	R/W	0	cts_gdc_clkl: 0:fclk_div4 1:fclk_div3 2:fclk_div5 3fclk_div2 4:mp1_clk 5:vid_pll1_clk 6mp2_clk 7:fclk_div2p5

Amlogic Proprietary and Confidential
Copyright © Amlogic. All rights reserved.

Bit(s)	R/W	Default	Description
24	R/W	0	cts_gdc_mux1_Clk_en
22:16	R/W	0	cts_gdc_mux1_Clk div N, if you want div8, set to 7
11:9	R/W	0	cts_gdc_clkl: 0:fclk_div4 1:fclk_div3 2:fclk_div5 3fclk_div2 4:mp1_clk 5:vid_pll1_clk 6mp2_clk 7:fclk_div2p5
8	R/W	0	cts_gdc_mux0_Clk_en
6:0	R/W	0	cts_gdc_mux0_Clk div N, if you want div8, set to 7

Table 7-183 CLKCTRL_AMLGDC_CLK_CTRL

Bit(s)	R/W	Default	Description
31	R/W	1	Final_mux_sel
30	R/W	0	Clk_en
27-25	R/W	0	cts_amlgdc_clkl: 0:fclk_div4 1:fclk_div3 2:fclk_div5 3fclk_div2 4:mp1_clk 5:vid_pll1_clk 6mp2_clk 7:fclk_div2p5
24	R/W	0	cts_amlgdc_mux1_Clk_en
22:16	R/W	0	cts_amlgdc_mux1_Clk div N, if you want div8, set to 7
11:9	R/W	0	cts_amlgdc_clkl: 0:fclk_div4 1:fclk_div3 2:fclk_div5 3fclk_div2 4:mp1_clk 5:vid_pll1_clk 6mp2_clk 7:fclk_div2p5
8	R/W	0	cts_amlgdc_mux0_Clk_en
6:0	R/W	0	cts_amlgdc_mux0_Clk div N, if you want div8, set to 7

Amlogic Proprietary and Confidential
Copyright © Amlogic. All rights reserved.

Table 7-184 CLKCTRL_MIPI_DSI_MEAS_CLK_CTRL

Bit(s)	R/W	Default	Description
23-21	R/W	0	cts_mipi_dsi_b_meas_clkl: 0:oscin 1:fclk_div4 2:fclk_div3 3fclk_div5 4:vid_pll0_clk 5:gp0 6fclk_div2 7:fclk_div7
20	R/W	0	cts_mipi_dsi_b_meas_mux1_Clk_en
18:12	R/W	0	cts_mipi_dsi_b_meas_mux1_Clk div N, if you want div8, set to 7
11:9	R/W	0	cts_mipi_dsi_a_meas_clkl: 0:oscin 1:fclk_div4 2:fclk_div3 3fclk_div5 4:vid_pll0_clk 5:gp0 6fclk_div2 7:fclk_div7
8	R/W	0	cts_mipi_dsi_a_meas_mux0_Clk_en
6:0	R/W	0	cts_mipi_dsi_a_meas_mux0_Clk div N, if you want div8, set to 7

Table 7-185 CLKCTRL_ENC_HDMI_CLK_CTRL

Bit(s)	R/W	Default	Description
22:21	R/W	0	cts_hdmi_tx_pnx_clkl: 0:enc0_hdmi_tx_pnx_clk 1:0 2:enc2_hdmi_tx_pnx_clk 30
20	R/W	0	cts_hdmi_tx_pnx_Clk_en
19:16	R/W	0	cts_hdmi_tx_pnx_Clk div N, if you want div8, set to 7
14:13	R/W	0	cts_hdmi_tx_fe_clkl: 0:enc0_hdmi_tx_fe_clk 1:0 2:enc2_hdmi_tx_fe_clk 30
12	R/W	0	cts_hdmi_tx_fe_Clk_en
11:8	R/W	0	cts_hdmi_tx_fe_Clk div N, if you want div8, set to 7
6:5	R/W	0	cts_hdmi_tx_pixel_clkl: 0:enc0_hdmi_tx_pixel_clk 1:0 2:enc2_hdmi_tx_pixel_clk 30

Amlogic Proprietary and Confidential
Copyright © Amlogic. All rights reserved.

Bit(s)	R/W	Default	Description
4	R/W	0	cts_hdmi_tx_pixel_Clk_en
3:0	R/W	0	cts_hdmi_tx_pixel_Clk div N, if you want div8, set to 7

Table 7-186 CLKCTRL_ENC0/2_HDMI_CLK_CTRL

Bit(s)	R/W	Default	Description
27:24	R/W	0	hdmi_tx_pnx_Clk sel
23:20	R/W	0	hdmi_tx_fe_Clk sel
19:16	R/W	0	hdmi_tx_pixel_Clk sel
15:0	RW	0	unused

Table 7-187 CLKCTRL_HTX_CLK_CTRL

Bit(s)	R/W	Default	Description
26:25	R/W	0	cts_hdmitx_200m_clkl: 0:oscin 1:fclk_div4 2:fclk_div3 3fclk_div5
24	R/W	0	cts_hdmitx_200m_Clk_en
22:16	R/W	0	cts_hdmitx_200m_Clk div N, if you want div8, set to 7
10:9	R/W	0	cts_hdmitx_prifl_clkl: 0:oscin 1:fclk_div4 2:fclk_div3 3fclk_div5
8	R/W	0	cts_hdmitx_prif_Clk_en
6:0	R/W	0	cts_hdmitx_prif_Clk div N, if you want div8, set to 7

Table 7-188 CLKCTRL_HTX_CLK_CTRL1

Bit(s)	R/W	Default	Description
10:9	R/W	0	cts_hdmitx_aud_clkl: 0:oscin 1:fclk_div4 2:fclk_div3 3fclk_div5
8	R/W	0	cts_hdmitx_aud_Clk_en
6:0	R/W	0	cts_hdmitx_aud_Clk div N, if you want div8, set to 7

Amlogic Proprietary and Confidential
Copyright © Amlogic. All rights reserved.

Table 7-189 CLKCTRL_HRX_CLK_CTRL

Bit(s)	R/W	Default	Description
26:25	R/W	0	cts_hdmirx_2m_clkl: 0:oscin 1:fclk_div4 2:fclk_div3 3fclk_div5
24	R/W	0	cts_hdmirx_2m_Clk_en
22:16	R/W	0	cts_hdmirx_2m_Clk div N, if you want div8, set to 7
10:9	R/W	0	cts_hdmirx_5m_clkl: 0:oscin 1:fclk_div4 2:fclk_div3 3fclk_div5
8	R/W	0	cts_hdmirx_5m_Clk_en
6:0	R/W	0	cts_hdmirx_5m_Clk div N, if you want div8, set to 7

Table 7-190 CLKCTRL_HRX_CLK_CTRL1

Bit(s)	R/W	Default	Description
26:25	R/W	0	cts_hdmirx_hdcp2x_eclkl: 0:oscin 1:fclk_div4 2:fclk_div3 3fclk_div5
24	R/W	0	cts_hdmirx_hdcp2x_eclk_en
22:16	R/W	0	cts_hdmirx_hdcp2x_eclk div N, if you want div8, set to 7
10:9	R/W	0	cts_hdmirx_cfg_clkl: 0:oscin 1:fclk_div4 2:fclk_div3 3fclk_div5
8	R/W	0	cts_hdmirx_cfg_Clk_en
6:0	R/W	0	cts_hdmirx_cfg_Clk div N, if you want div8, set to 7

Table 7-191 CLKCTRL_HRX_CLK_CTRL2

Bit(s)	R/W	Default	Description
26:25	R/W	0	cts_hdmirx_acr_ref_clkl: 0:oscin 1:fclk_div4 2:fclk_div3 3fclk_div5
24	R/W	0	cts_hdmirx_acr_ref_Clk_en
22:16	R/W	0	cts_hdmirx_acr_ref_Clk div N, if you want div8, set to 7

Amlogic Proprietary and Confidential
Copyright © Amlogic. All rights reserved.

Bit(s)	R/W	Default	Description
10:9	R/W	0	cts_hdmirx_aud_pll_clkl: 0:oscin 1:fclk_div4 2:fclk_div3 3fclk_div5
8	R/W	0	cts_hdmirx_aud_pll_Clk_en
6:0	R/W	0	cts_hdmirx_aud_pll_Clk div N, if you want div8, set to 7

Table 7-192 CLKCTRL_HRX_CLK_CTRL3

Bit(s)	R/W	Default	Description
10:9	R/W	0	cts_hdmirx_meter_clkl: 0:oscin 1:fclk_div4 2:fclk_div3 3fclk_div5
8	R/W	0	cts_hdmirx_meter_Clk_en
6:0	R/W	0	cts_hdmirx_meter_Clk div N, if you want div8, set to 7

Table 7-193 CLKCTRL_HDMI_VID_PLL_CLK_DIV

Bit(s)	R/W	Default	Description
25	R/W	0	Reg_vid_pll2_clk_sel_hdmi
24	R/W	0	Reg_vid_pll0_clk_sel_hdmi

Table 7-194 CLKCTRL_MIPI_ISP_CLK_CTRL

Bit(s)	R/W	Default	Description
11:9	R/W	0	cts_pwm_i/g/e/c/a_clk clk_sel: 0: osin 1: fclk_div4 2: fclk_div3 3: fclk_fiv5 4:fclk_div7 5:mp2_clk_out 6:mp3_clk_out 7:gp1_pll_clk
8	R/W	0	Cts_mipi_isp_clk clk_en
6:0	R/W	0	cts_nipi_isp_clk div N, if you want div8, set to 7

7.8 Reset

Amlogic Proprietary and Confidential
Copyright © Amlogic. All rights reserved.

7.8.1 Overview

Reset

This module is control module level reset which is shown in the following diagram as “REG/SEC_ REG”, and the control of watchdog is also shown.

Figure 7-25 Reset Design

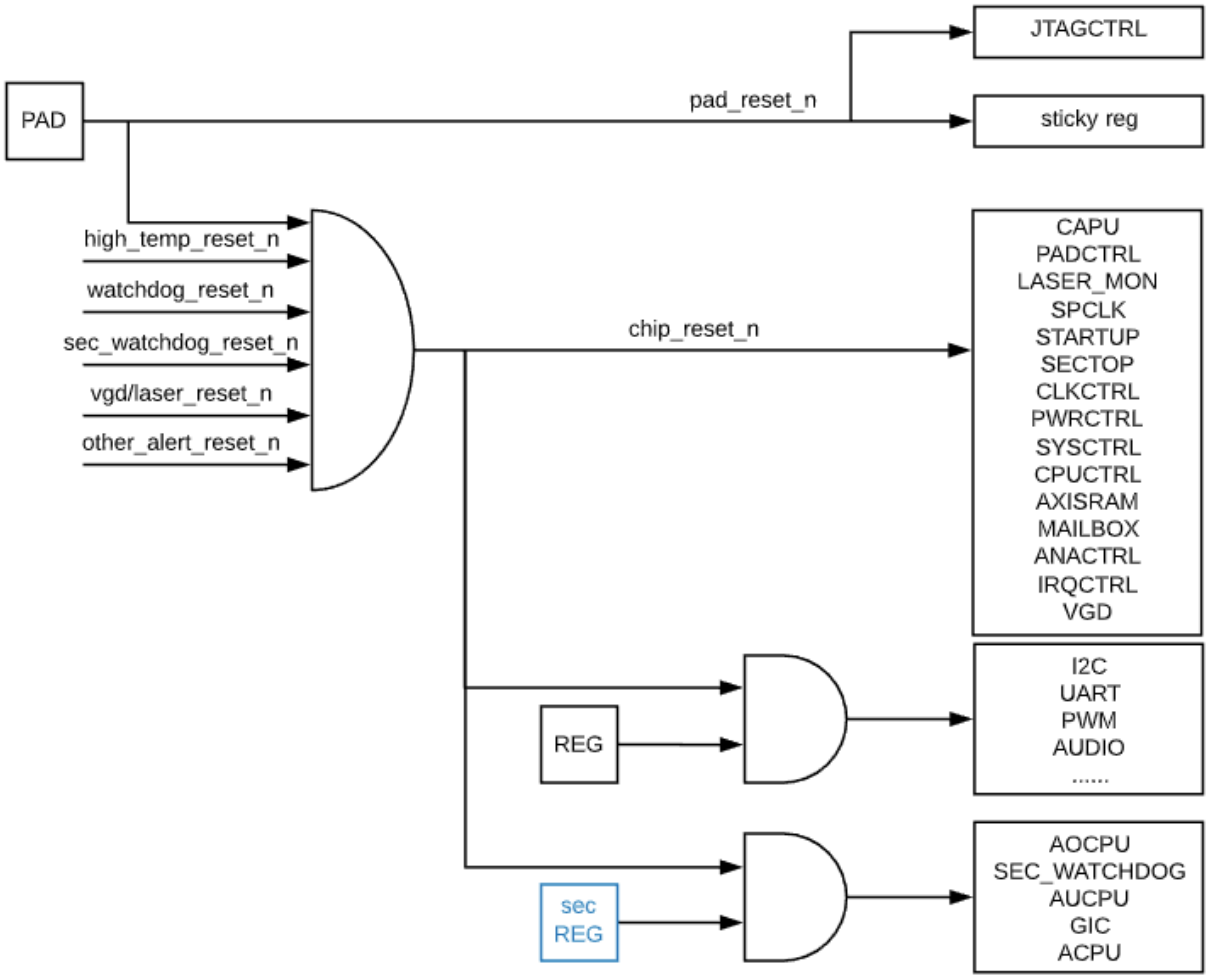

RESETn_module is low active.

RESETn_module = (~RESET_reg & RESET_LEVEL) | RESET_MASK;

If set RESET_reg = 1, will reset the module.

RESET_reg is an auto-recover register which will recover to 0 after some cycles.

If set RESET_LEVEL = 0, will keep RESETn_module as low, mean the module will keep at reset status.

If set RESET_MASK = 1, will keep RESETn_module as high, mean the module will never be reset.

Watchdog

There are two watchdogs, one can be used in non-secure mode, and the other can only be used in secure mode.

The time tick used by watchdog is based on sys_clk or osc_clk.

Amlogic Proprietary and Confidential
Copyright © Amlogic. All rights reserved.

There are 3 features that can be enabled separately after time out:

- Generate interrupt (can be enabled independently)
- Reset the chip (can be enabled independently)
- Generate gpio output (pulse or level, controlled by register)

Figure 7-26 Watchdog Design

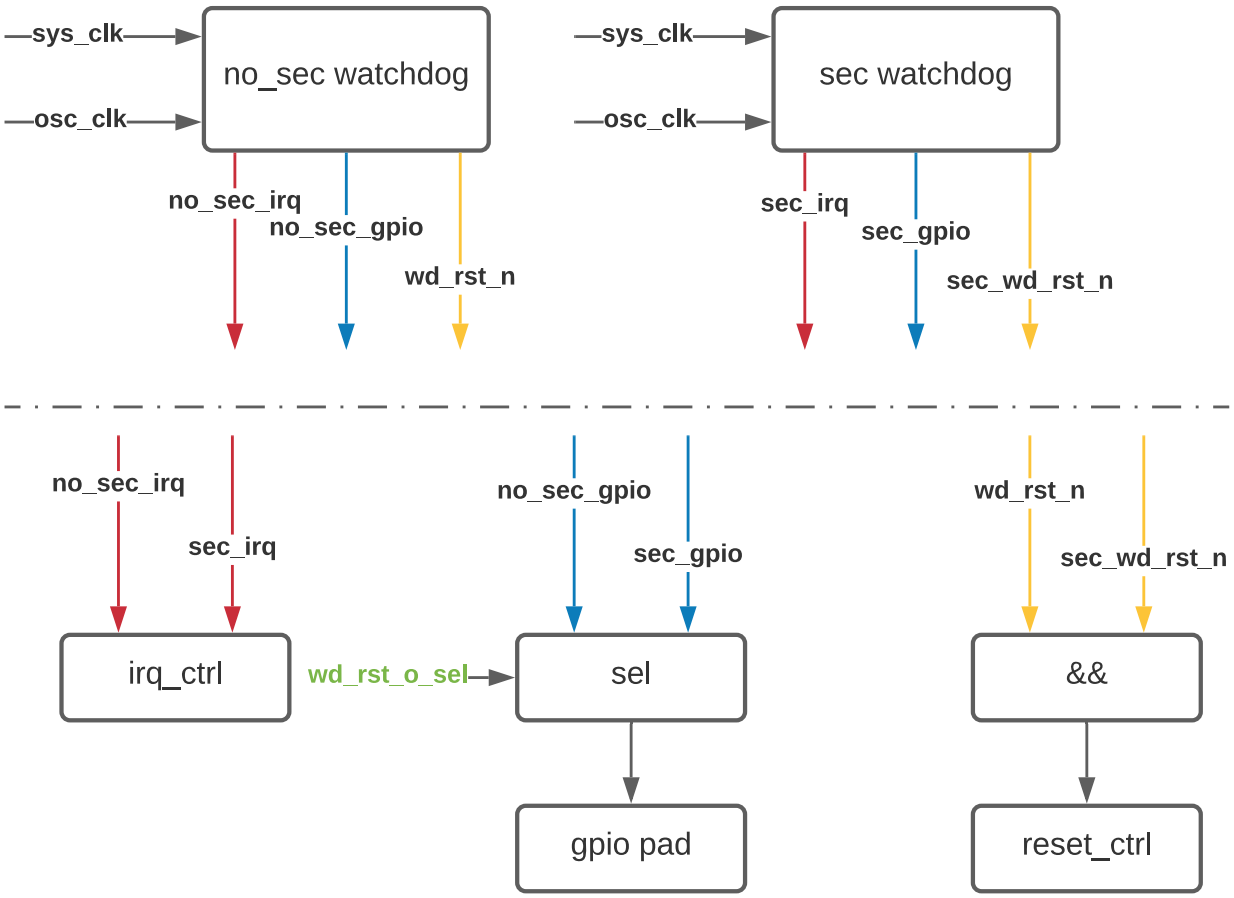

7.8.2 Register Description

Register Address

For below registers, the base address is 0xfe002000.

Each register final address = BASE + address * 4.

The following lists describe the mapping between each RESET_CTRL register and its address.

- RESETCTRL_RESET0 0xfe002000
- RESETCTRL_RESET1 0xfe002004
- RESETCTRL_RESET2 0xfe002008
- RESETCTRL_RESET3 0xfe00200c
- RESETCTRL_RESET4 0xfe002010
- RESETCTRL_RESET5 0xfe002014
- RESETCTRL_RESET6 0xfe002018

Amlogic Proprietary and Confidential
Copyright © Amlogic. All rights reserved.

- RESETCTRL_RESET0_LEVEL 0xfe002040
- RESETCTRL_RESET1_LEVEL 0xfe002044
- RESETCTRL_RESET2_LEVEL 0xfe002048
- RESETCTRL_RESET3_LEVEL 0xfe00204c
- RESETCTRL_RESET4_LEVEL 0xfe002050
- RESETCTRL_RESET5_LEVEL 0xfe002054
- RESETCTRL_RESET6_LEVEL 0xfe002058
- RESETCTRL_RESET0_MASK 0xfe002080
- RESETCTRL_RESET1_MASK 0xfe002084
- RESETCTRL_RESET2_MASK 0xfe002088
- RESETCTRL_RESET3_MASK 0xfe00208c
- RESETCTRL_RESET4_MASK 0xfe002090
- RESETCTRL_RESET5_MASK 0xfe002094
- RESETCTRL_RESET6_MASK 0xfe002098
- RESETCTRL_RESET_HOLD_CYC 0xfe0020c0
- RESETCTRL_WATCHDOG_CTRL0 0xfe002100
- RESETCTRL_WATCHDOG_CTRL1 0xfe002104
- RESETCTRL_WATCHDOG_CNT 0xfe002108
- RESETCTRL_WATCHDOG_CLR 0xfe00210c
- RESETCTRL_SEC_WATCHDOG_CTRL0 0xfe002110
- RESETCTRL_SEC_WATCHDOG_CTRL1 0xfe002114
- RESETCTRL_SEC_WATCHDOG_CNT 0xfe002118
- RESETCTRL_SEC_WATCHDOG_CLR 0xfe00211c
- RESETCTRL_SEC_RESET0 0xfe002140
- RESETCTRL_SEC_RESET1 0xfe002144
- RESETCTRL_SEC_RESET2 0xfe002148
- RESETCTRL_SEC_RESET0_LEVEL 0xfe002180
- RESETCTRL_SEC_RESET1_LEVEL 0xfe002184
- RESETCTRL_SEC_RESET2_LEVEL 0xfe002188
- RESETCTRL_SEC_RESET0_MASK 0xfe0021c0
- RESETCTRL_SEC_RESET1_MASK 0xfe0021c4
- RESETCTRL_SEC_RESET2_MASK 0xfe0021c8
- RESETCTRL_RESET0_LOCK 0xfe002200
- RESETCTRL_RESET1_LOCK 0xfe002204
- RESETCTRL_RESET2_LOCK 0xfe002208
- RESETCTRL_RESET3_LOCK 0xfe00220c
- RESETCTRL_RESET4_LOCK 0xfe002210
- RESETCTRL_RESET5_LOCK 0xfe002214
- RESETCTRL_RESET6_LOCK 0xfe002218
- RESETCTRL_SEC_RESET0_LOCK 0xfe002220
- RESETCTRL_SEC_RESET1_LOCK 0xfe002224
- RESETCTRL_SEC_RESET2_LOCK 0xfe002228
- RESETCTRL_RESET0_PROT 0xfe002240
- RESETCTRL_RESET1_PROT 0xfe002244

Amlogic Proprietary and Confidential
Copyright © Amlogic. All rights reserved.

- RESETCTRL_RESET2_PROT 0xfe002248
- RESETCTRL_RESET3_PROT 0xfe00224c
- RESETCTRL_RESET4_PROT 0xfe002250
- RESETCTRL_RESET5_PROT 0xfe002254
- RESETCTRL_RESET6_PROT 0xfe002258
- RESETCTRL_SEC_RESET0_PROT 0xfe002260
- RESETCTRL_SEC_RESET1_PROT 0xfe002264
- RESETCTRL_SEC_RESET2_PROT 0xfe002268

Register Description

Table 7-195 RESETCTRL_RESET0~6

RESET_reg, write each bit to 1 can reset related module, the reset will auto-cover to 0 by HW.

*mean it can reset by power control signals because it need keep reset when power off/on.

bit	reg_reset0_n	reg_reset1_n	reg_reset2_n	reg_reset3_n	reg_reset4_n	reg_reset5_n	reg_reset6_n	reg_sec_reset0_n	reg_sec_reset1_n	reg_sec_reset2_n
31	venc*	mipi_dsi_b_host*		brg_cci*	ts_hevc	brg_nic4_all	brg_am2axi2			
30	viu*	mipi_dsi_a_host*		brg_adb_a53	ts_vpu	brg_nic4_main	brg_am2axi1			
29	hdmitx*	mipi_dsi0_phy		brg_adb_a73	ts_nna	brg_nic4_clk81	brg_am2axi0			
28	rdma*	mipi_dsi1_phy		brg_adb_mali0	ts_gpu	brg_nic4_vapb		vpu_sec		
27	venc1*	edp0_pipeline	watchdog	brg_adb_mali1	i2c_m_ao_b	brg_nic4_dspa	brg_ampipe_eth	dspb_sec		
26	venc2*	edp1_pipeline	afifo	mipi_isp*	sd_emmc_C*	brg_nic4_dspb	brg_ampipe_nand	dspa_sec		
25	vdac*		cec		sd_emmc_B*			isp_sec		
24	venc0*	ddr1	acodec		sd_emmc_A*			dewarp_sec		
23	vid_lock*	pcie1_apb			i2c_m_ao_a			gdc_sec		

Amlogic Proprietary and Confidential
Copyright © Amlogic. All rights reserved.

bit	reg_reset0_n	reg_reset1_n	reg_reset2_n	reg_reset3_n	reg_reset4_n	reg_reset5_n	reg_reset6_n	reg_sec_reset0_n	reg_sec_reset1_n	reg_sec_reset2_n
22	hdmitxphy	pcie1_phy			i2c_m_f	brg_nic5_vpu		ge2d_sec		
21	ge2d*	dsi_lvds_edp_top			i2c_m_e	brg_nic3_all*		mali_sec		
20	vdi6*	combo_dphy_chan1			i2c_m_d	brg_nic3_main*		wave*		
19	vid_pll_div	combo_dphy_chan0	bt		i2c_m_c	brg_nic3_amlgdc*		hevc*		
18	vcbus*	edp1_ctrl*	sar_adc		i2c_m_b	brg_nic3_gdc*		vdec*		
17	brg_vcbus_dec	edp0_ctrl*	spifc		i2c_m_a	brg_nic3_ge2d*		hcodec*		
16	hdmitx_capb3*	eth*	msr_clk		i2c_s_a	brg_nic3_hcodec*		gic		
15		anakin*			uart_f	brg_nic3_hevcb*			sys_cpu_3*	a73_sys_cpu_3*
14	dewarp*	pcie_apb			uart_e	brg_nic3_hevcf*			sys_cpu_2*	a73_sys_cpu_2*
13	hdmirx_apb*	pcie_phy			uart_d	brg_nic3_vdec*	brg_frisp0_pipel		sys_cpu_1*	a73_sys_cpu_1*
12	hdmirx*	pcie_A*			uart_c	brg_nic3_wave*	brg_frisp1_pipel	aucpu_dma	sys_cpu_0*	a73_sys_cpu_0*
11	hdmi20_aes	i_dspa	rsa		uart_b	brg_nic2_all*	brg_frisp2_pipel	aucpu_sys	sys_cpu_core_3*	a73_sys_cpu_core_3*
10	gdc*	i_dspb*	spicc_1*		uart_a	brg_nic2_hdmi*	brg_frisp3_pipel	aucpu_por	sys_cpu_core_2*	a73_sys_cpu_core_2*

Amlogic Proprietary and Confidential
Copyright © Amlogic. All rights reserved.

bit	reg_reset0_n	reg_reset1_n	reg_reset2_n	reg_reset3_n	reg_reset4_n	reg_reset5_n	reg_reset6_n	reg_sec_reset0_n	reg_sec_reset1_n	reg_sec_reset2_n
9	u2phy21	i_debuga*	spicc_0*			brg_nic2_main*	brg_nnatonoc_pipel	aucpu_all	sys_cpu_core_1*	a73_sys_cpu_core_1*
8	u2phy20	i_debugb*	smart_card			brg_nic2_sys*	brg_nic2tonoc_pipel	sec_watchdog	sys_cpu_core_0*	a73_sys_cpu_core_0*
7	u3drd_pipe0*	combo_dphy_chan2	spicc_5*				brg_nic3tonoc_pipel		sys_pll_div*	a73_sys_pll_div*
6	u3drd*	dos	spicc_4*		pwm_ef		brg_nic4tonoc_pipel		Psys_cpu_capb3*	a73_Psys_cpu_capb3*
5	u2drd*	dos_capb3	spicc_3*		pwm_cd		brg_vputonoc_pipel		rom_boot	
4	usb*	ddr	spicc_2*	brg_nic5_gpv	pwm_ab		brg_sectonic4_pipel		sys_cpu_axi*	a73_sys_cpu_axi*
3		ddr_apb	ts_a53	brg_nic4_gpv	pwm_ao_gh	brg_noc_all*	brg_hdmirxtonic2_pipel		sys_cpu_l2*	a73_sys_cpu_l2*
2		mali*	ts_a73	brg_nic3_gpv	pwm_ao_ef	brg_noc_main*	brg_nic2tonic4_pipel	aocpu_por	sys_cpu_p*	a73_sys_cpu_p*
1		mali_capb3*	ir_ctrl	brg_nic2_gpv	pwm_ao_cd	brg_noc_ddr0*	brg_hevcf_dmc_pipel	aocpu_core	sys_cpu_mbist*	a73_sys_cpu_mbist*
0		audio	device_mmc_arb	brg_nic1_gpv	pwm_ao_ab	brg_noc_ddr1*	brg_vdec_pipel	aocpu		

Amlogic Proprietary and Confidential
Copyright © Amlogic. All rights reserved.

RESETCTRL_SEC_RESET0

Write each bit to 1 can reset related module, the reset will auto-recover to 0 by HW.

RESETCTRL_RESET0~6_LEVEL

Write each bit to 0 will hold reset as 1.

The list refer to resetctrl_reset0~6

RESETCTRL_SEC_RESET0_LEVEL

Write each bit to 0 will hold reset as 1.

Refer to resetctrl_sec_reset0

RESETCTRL_RESET0~6_MASK

Write each bit to 1 will hold reset as 0.

The list refer to resetctrl_reset0~6

RESETCTRL_SEC_RESET0_MASK

Write each bit to 1 will hold reset as 0.

The list refer to resetctrl_sec_reset0

RESETCTRL_RESET0~6_LOCK

Each bit can write 1 only

Write each bit to 1 will lock reg reset/level/mask.

The list refer to resetctrl_reset0~6

RESETCTRL_SEC_RESET0_LOCK

Each bit can write 1 only

Write each bit to 1 will lock reg reset/level/mask.

The list refer to resetctrl_sec_reset0

RESETCTRL_RESET0~6_PROT

Write each bit to 1 will protect(can’t write) reg reset/level/mask.

The list refer to resetctrl_reset0~6

RESETCTRL_SEC_RESET0_PROT

Write each bit to 1 will protect(can’t write) reg reset/level/mask.

The list refer to resetctrl_sec_reset0

Table 7-196 RESETCTRL_RESET_HOLD_CYC

Bit(s)	R/W	Default	Description
4:0	R/W	3	the cycle number of auto-recover

Table 7-197 RESETCTRL_WATCHDOG_CTRL0

Bit(s)	R/W	Default	Description
31	R	0	watchdog status(RESET value)
27	R/W	0	the RESET OUT value when watchdog_en = 0; high active;
25	R/W	0	Clk_div_en

Amlogic Proprietary and Confidential
Copyright © Amlogic. All rights reserved.

Bit(s)	R/W	Default	Description
24	R/W	1	Clk_en
23	R/W	0	Interrupt_en
22	R/W	0	reset_n_en
19	R/W	0	Clk_sel 0: cts_oscin_clk; 1:cts_sys_clk;
18	R/W	0	Watchdog_en
17-0	R/W	23999	Clk_div_tcnt

Table 7-198 RESETCTRL_WATCHDOG_CTRL1

Bit(s)	R/W	Default	Description
17	R/W	0	Gpio_pulse
16	R/W	0	Gpio_polarity
15-0	R/W	0	Gpio_pulse_tcnt

Table 7-199 RESETCTRL_WATCHDOG_CNT

Bit(s)	R/W	Default	Description
31-16	R	0	Watchdog count read
15-0	R/W	0	Watchdog_count set

Table 7-200 RESETCTRL_WATCHDOG_CLR

Bit(s)	R/W	Default	Description
31:0	W	0	write any value will clear watchdog status

RESETCTRL_SEC_WATCHDOG_CTRL0

The description/function is same as RESETCTRL_WATCHDOG_CTRL0, access permission is different, it can be only accessed in secure mode.

RESETCTRL_SEC_WATCHDOG_CTRL1

The description/function is same as RESETCTRL_WATCHDOG_CTRL1, access permission is different, it can be only accessed in secure mode

RESETCTRL_SEC_WATCHDOG_CNT

The description/function is same as RESETCTRL_WATCHDOG_CNT, access permission is different, it can be only accessed in secure mode

RESETCTRL_SEC_WATCHDOG_CLR

The description/function is same as RESETCTRL_WATCHDOG_CLR, access permission is different, it can be only accessed in secure mode

7.9 GPIO

Amlogic Proprietary and Confidential
Copyright © Amlogic. All rights reserved.

7.9.1 Overview

The SOC has a number of multi-function digital I/O pads that can be multiplexed to a number of internal resources (e.g. PWM generators, SDIO controllers). When a digital I/O is not being used for any specific purpose, it is converted to a general purpose GPIO pin. A GPIO pin can be statically set to high/low logical levels. The structure of a GPIO is given below.

Figure 7-27 GPIO Structure

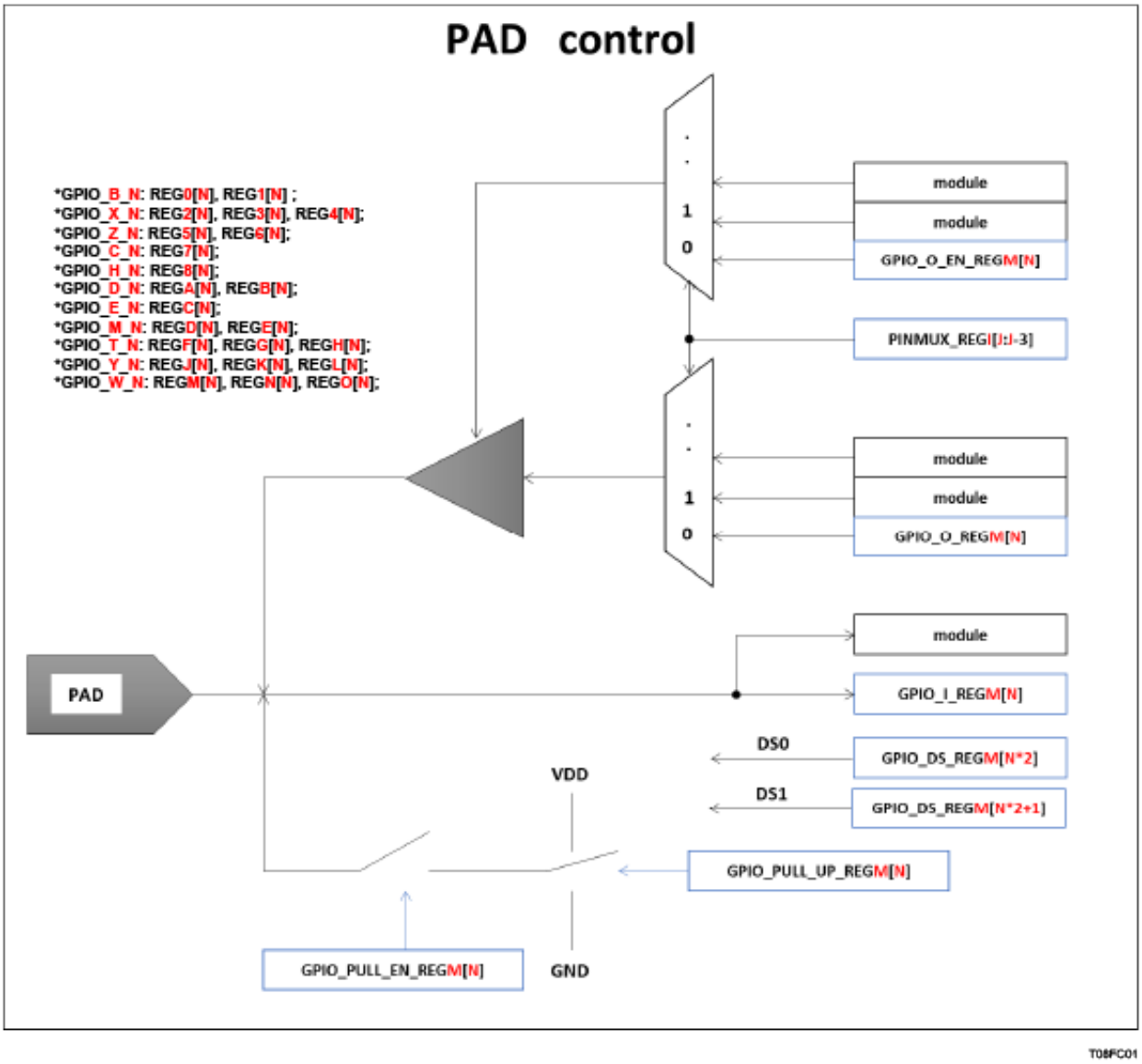

7.9.2 GPIO Multiplex Function

The GPIO multiplex functions are shown in the sections below, where the RegNN[MM] corresponds to CBUS registers defined in the following table.

The base address is 0xfe004000 for the PAD control registers.

The final address is calculated as: final address = base address + offset*4.

Amlogic Proprietary and Confidential
Copyright © Amlogic. All rights reserved.

Table 7-201 GPIOW_x Multi-Function Pin

Pin Name	Control Register	Control Bit	Func1	Func2	Func3
GPIOW_0	PADCTRL_PIN_MUX_REGM	3:0	HDMIRX_A_HPD		
GPIOW_1		7:4	HDMIRX_A_5VDET		
GPIOW_2		11:8	HDMIRX_A_SDA	UART_AO_A_TX	HDMITX_SDA
GPIOW_3		15:12	HDMIRX_A_SCL	UART_AO_A_RX	HDMITX_SCL
GPIOW_4		19:16	HDMIRX_C_HPD		
GPIOW_5		23:20	HDMIRX_C_5VDET		
GPIOW_6		27:24	HDMIRX_C_SDA	UART_AO_A_TX	
GPIOW_7		31:28	HDMIRX_C_SCL	UART_AO_A_RX	
GPIOW_8	PADCTRL_PIN_MUX_REGN	3:0	HDMIRX_B_HPD		
GPIOW_9		7:4	HDMIRX_B_5VDET		
GPIOW_10		11:8	HDMIRX_B_SDA	UART_AO_A_TX	
GPIOW_11		15:12	HDMIRX_B_SCL	UART_AO_A_RX	
GPIOW_12		19:16	CEC_A		
GPIOW_13		23:20	HDMITX_SDA		
GPIOW_14		27:24	HDMITX_SCL		
GPIOW_15		31:28	HDMITX_HPD_IN		
GPIOW_16	PADCTRL_PIN_MUX_REGO	3:0	CEC_B		

Table 7-202 GPIOD_x Multi-Function Pin

Pin Name	Control Register	Control Bit	Func1	Func2	Func3	Func4
GPIOD_0	PADCTRL_PIN_MUX_REGA	3:0	UART_AO_A_TX			
GPIOD_1		7:4	UART_AO_A_RX			
GPIOD_2		11:8	I2CM_AO_A_SCL	I2CS_AO_SCL	UART_AO_B_TX	
GPIOD_3		15:12	I2CM_AO_A_SDA	I2CS_AO_SDA	UART_AO_B_RX	
GPIOD_4		19:16	IR_OUT	RTC_CLK_IN	UART_AO_B_CTS	

Amlogic Proprietary and Confidential
Copyright © Amlogic. All rights reserved.

Pin Name	Control Register	Control Bit	Func1	Func2	Func3	Func4
GPIOD_5		23:20	IR_IN	PWM_AO_H		
GPIOD_6		27:24	JTAG_A_CLK	PWM_AO_C	PWM_AO_C_HIZ	IR_OUT
GPIOD_7		31:28	JTAG_A_TMS	PWM_AO_G	PWM_AO_G_HIZ	
GPIOD_8	PADCTRL_PIN_MUX_REGB	3:0	JTAG_A_TDI	SPDIF_OUT		
GPIOD_9		7:4	JTAG_A_TDO	SPDIF_IN		
GPIOD_10		11:8	GEN_CLK_OUT	PWM_AO_H	UART_AO_B_RTS	
GPIOD_11		15:12	PWM_AO_G			
GPIOD_12		19:16	WD_RSTO			

Table 7-203 GPIOE_x Multi-Function Pin

Pin Name	Control Register	Control Bit	Func1	Func2	Func3
GPIOE_0	PADCTRL_PIN_MUX_REGC	3:0	PWM_AO_A	I2CM_AO_A_SCL	
GPIOE_1		7:4	PWM_AO_B	I2CM_AO_A_SDA	
GPIOE_2		11:8	PWM_AO_C	CLK25M	
GPIOE_3		15:12	PWM_AO_D	I2CM_AO_B_SCL	
GPIOE_4		19:16	PWM_AO_E	I2CM_AO_B_SDA	CLK12M_24M
GPIOE_5		23:20	PWM_AO_F	RTC_CLK_OUT	
GPIOE_6		27:24	PWM_AO_G		

Table 7-204 GPIOB_x Multi-Function Pin

Pin Name	Control Register	Control Bit	Func1	Func2
GPIOB_0	PADCTRL_PIN_MUX_REG0	3:0	EMMC_D0	
GPIOB_1		7:4	EMMC_D1	
GPIOB_2		11:8	EMMC_D2	
GPIOB_3		15:12	EMMC_D3	SPIF_HOLD
GPIOB_4		19:16	EMMC_D4	SPIF_MO
GPIOB_5		23:20	EMMC_D5	SPIF_MI
GPIOB_6		27:24	EMMC_D6	SPIF_CLK
GPIOB_7		31:28	EMMC_D7	SPIF_WP
GPIOB_8	PADCTRL_PIN_MUX_REG1	3:0	EMMC_CLK	

Amlogic Proprietary and Confidential
Copyright © Amlogic. All rights reserved.

Pin Name	Control Register	Control Bit	Func1	Func2
GPIOB_9		7:4		
GPIOB_10		11:8	EMMC_CMD	
GPIOB_11		15:12	EMMC_DS	
GPIOB_12		19:16		SPIF_CS

Table 7-205 GPIOC_x Multi-Function Pin

Pin Name	Control Register	Control Bit	Func1	Func2	Func3
GPIOC_0	PADCTRL_PIN_MUX_REG7	3:0	SDCARD_D0	JTAG_B_TDO	SPI_B_MOSI
GPIOC_1		7:4	SDCARD_D1	JTAG_B_TDI	SPI_B_MISO
GPIOC_2		11:8	SDCARD_D2	UART_AO_A_RX	SPI_B_SCLK
GPIOC_3		15:12	SDCARD_D3	UART_AO_A_TX	SPI_B_SS0
GPIOC_4		19:16	SDCARD_CLK	JTAG_B_CLK	
GPIOC_5		23:20	SDCARD_CMD	JTAG_B_TMS	
GPIOC_6		27:24	GEN_CLK_OUT		

Table 7-206 GPIOZ_x Multi-Function Pin

Pin Name	Control Register	Control Bit	Func1	Func2	Func3	Func4
GPIOZ_0	PADCTRL_PIN_MUX_REG5	3:0	ETH_MDIO	ISO7816_CLK		SPI_E_MOSI
GPIOZ_1		7:4	ETH_MDC	ISO7816_DATA		SPI_E_MISO
GPIOZ_2		11:8	ETH_RGMII_RX_CLK	TSIN_B_VALID		SPI_E_SCLK
GPIOZ_3		15:12	ETH_RX_DV	TSIN_B_SOP		SPI_E_SS0
GPIOZ_4		19:16	ETH_RXD0	TSIN_B_DIN0		SPI_F_MOSI
GPIOZ_5		23:20	ETH_RXD1	TSIN_B_CLK		SPI_F_MISO
GPIOZ_6		27:24	ETH_RXD2_RGMII	TSIN_B_FAIL	TSIN_C_VALID	SPI_F_SCLK
GPIOZ_7		31:28	ETH_RXD3_RGMII	TSIN_B_DIN1	TSIN_C_SOP	SPI_F_SS0
GPIOZ_8	PADCTRL_PIN_MUX_REG6	3:0	ETH_RGMII_TX_CLK	TSIN_B_DIN2	TSIN_C_DIN0	
GPIOZ_9		7:4	ETH_TXEN	TSIN_B_DIN3	TSIN_C_CLK	
GPIOZ_10		11:8	ETH_TXD0	TSIN_B_DIN4	TSIN_D_VALID	
GPIOZ_11		15:12	ETH_TXD1	TSIN_B_DIN5	TSIN_D_SOP	

Amlogic Proprietary and Confidential
Copyright © Amlogic. All rights reserved.

Pin Name	Control Register	Control Bit	Func1	Func2	Func3	Func4
GPIOZ_12		19:16	ETH_TXD2_ RGMII	TSIN_B_DIN6	TSIN_D_ DIN0	
GPIOZ_13		23:20	ETH_TXD3_ RGMII	TSIN_B_DIN7	TSIN_D_CLK	

Table 7-207 GPIOH_x Multi-Function Pin

Pin Name	Control Register	Control Bit	Func1	Func2	Func3
GPIOH_0	PADCTRL_PIN_ MUX_REG8	3:0	MIC_MUTE_ KEY		
GPIOH_1		7:4	Mic_Mute_LED	PWM_VS	
GPIOH_2		11:8	I2CM_D_SCL	UART_F_TX	PCIECK_REQN
GPIOH_3		15:12	I2CM_D_SDA	UART_F_RX	
GPIOH_4		19:16	I2CM_E_SCL	UART_F_CTS	
GPIOH_5		23:20	I2CM_E_SDA	UART_F_RTS	
GPIOH_6		27:24	ETH_LINK_LED	I2CM_A_SDA	
GPIOH_7		31:28	ETH_ACT_LED	I2CM_A_SCL	

Table 7-208 GPIOM_x Multi-Function Pin

Pin Name	Control Register	Control Bit	Func1	Func2
GPIOM_0	PADCTRL_PIN_ MUX_REGD	3:0	TDM_D12	PDM_DIN1
GPIOM_1		7:4	TDM_D13	PDM_DIN2
GPIOM_2		11:8	TDM_D14	PDM_DIN3
GPIOM_3		15:12	TDM_D15	PDM_DCLK
GPIOM_4		19:16	TDM_SCLK3	PDM_DIN0
GPIOM_5		23:20	TDM_FS3	PDM_DIN1
GPIOM_6		27:24	I2CM_D_SCL	
GPIOM_7		31:28	I2CM_D_SDA	
GPIOM_8	PADCTRL_PIN_ MUX_REGE	3:0	SPI_B_MOSI	UART_D_TX
GPIOM_9		7:4	SPI_B_MISO	UART_D_RX
GPIOM_10		11:8	SPI_B_SCLK	UART_D_CTS
GPIOM_11		15:12	SPI_B_SS0	UART_D_RTS
GPIOM_12		19:16	SPI_B_SS1	I2CM_C_SCL
GPIOM_13		23:20	SPI_B_SS2	I2CM_C_SDA

Amlogic Proprietary and Confidential
Copyright © Amlogic. All rights reserved.

Table 7-209 GPIOX_x Multi-Function Pin

Pin Name	Control Register	Control Bit	Func1	Func2
GPIOX_0	PADCTRL_PIN_MUX_REG2	3:0	SDIO_D0	
GPIOX_1		7:4	SDIO_D1	
GPIOX_2		11:8	SDIO_D2	
GPIOX_3		15:12	SDIO_D3	
GPIOX_4		19:16	SDIO_CLK	
GPIOX_5		23:20	SDIO_CMD	
GPIOX_6		27:24	PWM_B	
GPIOX_7		31:28	PWM_C	
GPIOX_8	PADCTRL_PIN_MUX_REG3	3:0	TDM_D0	
GPIOX_9		7:4	TDM_D1	
GPIOX_10		11:8	TDM_FS0	
GPIOX_11		15:12	TDM_SCLK0	
GPIOX_12		19:16	UART_C_TX	
GPIOX_13		23:20	UART_C_RX	
GPIOX_14		27:24	UART_C_CTS	CLK12M_24M
GPIOX_15		31:28	UART_C_RTS	
GPIOX_16	PADCTRL_PIN_MUX_REG4	3:0	PWM_A	
GPIOX_17		7:4	I2CM_C_SDA	
GPIOX_18		11:8	I2CM_C_SCL	
GPIOX_19		15:12	PWM_D	

Table 7-210 GPIOT_x Multi-Function Pin

Pin Name	Control Register	Control Bit	Func1	Func2	Func3
GPIOT_0	PADCTRL_PIN_MUX_REGF	3:0	MCLK_1		
GPIOT_1		7:4	TDM_SCLK1		
GPIOT_2		11:8	TDM_FS1		
GPIOT_3		15:12	TDM_D2	SPDIF_IN	
GPIOT_4		19:16	TDM_D3	SPDIF_OUT	
GPIOT_5		23:20	TDM_D4	ISO7816_CLK	
GPIOT_6		27:24	TDM_D5	ISO7816_DATA	SPI_D_MOSI
GPIOT_7		31:28	TDM_D6	TSIN_A_SOP	SPI_D_MISO
GPIOT_8	PADCTRL_PIN_MUX_REGG	3:0	TDM_D7	TSIN_A_DIN0	SPI_D_SCLK
GPIOT_9		7:4	TDM_D8	TSIN_A_CLK	SPI_D_SS0
GPIOT_10		11:8	TDM_D9	TSIN_A_VALID	

Amlogic Proprietary and Confidential
Copyright © Amlogic. All rights reserved.

Pin Name	Control Register	Control Bit	Func1	Func2	Func3
GPIOT_11		15:12	TDM_D10		
GPIOT_12		19:16	TDM_D11		
GPIOT_13		23:20	MCLK_2		
GPIOT_14		27:24	TDM_SCLK2		
GPIOT_15		31:28	TDM_FS2		
GPIOT_16	PADCTRL_PIN_MUX_REGH	3:0	I2CM_B_SCL		
GPIOT_17		7:4	I2CM_B_SDA		
GPIOT_18		11:8	SPI_A_MOSI		
GPIOT_19		15:12	SPI_A_MISO		
GPIOT_20		19:16	SPI_A_SCLK	I2CM_A_SCL	
GPIOT_21		23:20	SPI_A_SS0	I2CM_A_SDA	
GPIOT_22		27:24	SPI_A_SS1	I2CM_C_SCL	
GPIOT_23		31:28	SPI_A_SS2	I2CM_C_SDA	

Table 7-211 GPIOY_x Multi-Function Pin

Pin Name	Control Register	Control Bit	Func1	Func2	Func3	Func4
GPIOY_0	PADCTRL_PIN_MUX_REGJ	3:0	SPI_C_MOSI			
GPIOY_1		7:4	SPI_C_MISO		PWM_E	
GPIOY_2		11:8	SPI_C_SCLK			
GPIOY_3		15:12	SPI_C_SS0			
GPIOY_4		19:16	SPI_C_SS1	TSIN_C_SOP	HSYNC	
GPIOY_5		23:20	SPI_C_SS2	TSIN_C_DIN0	VSYNC	
GPIOY_6		27:24	UART_E_TX	TSIN_C_CLK		
GPIOY_7		31:28	UART_E_RX	TSIN_C_VALID		
GPIOY_8	PADCTRL_PIN_MUX_REGK	3:0	UART_E_CTS	TSIN_D_SOP	PWM_F	
GPIOY_9		7:4	UART_E_RTS	TSIN_D_DIN0	3D_SYNC_OUT	
GPIOY_10		11:8	UART_D_CTS	TSIN_D_CLK	VX1_A_HTPDN	eDP_A_HPD
GPIOY_11		15:12	UART_D_RTS	TSIN_D_VALID	VX1_B_HTPDN	eDP_B_HPD
GPIOY_12		19:16	UART_D_TX		VX1_A_LOCKN	
GPIOY_13		23:20	UART_D_RX		VX1_B_LOCKN	
GPIOY_14		27:24			PWM_VS	

Amlogic Proprietary and Confidential
Copyright © Amlogic. All rights reserved.

Pin Name	Control Register	Control Bit	Func1	Func2	Func3	Func4
GPIOY_15		31:28	I2CM_E_SCL			
GPIOY_16	PADCTRL_ PIN_MUX_ REGL	3:0	I2CM_E_SDA			
GPIOY_17		7:4	I2CM_F_SCL			
GPIOY_18		11:8	I2CM_F_SDA	PCIECK_ REQN		

7.9.3 Register Description

7.9.3.1 Pin MUX Registers

Register Address

The following lists describe the mapping between each register and its address.

- PADCTRL_PIN_MUX_REG0 0xfe004000
- PADCTRL_PIN_MUX_REG1 0xfe004004
- PADCTRL_PIN_MUX_REG2 0xfe004008
- PADCTRL_PIN_MUX_REG3 0xfe00400c
- PADCTRL_PIN_MUX_REG4 0xfe004010
- PADCTRL_PIN_MUX_REG5 0xfe004014
- PADCTRL_PIN_MUX_REG6 0xfe004018
- PADCTRL_PIN_MUX_REG7 0xfe00401c
- PADCTRL_PIN_MUX_REG8 0xfe004020
- PADCTRL_PIN_MUX_REG9 0xfe004024
- PADCTRL_PIN_MUX_REGA 0xfe004028
- PADCTRL_PIN_MUX_REGB 0xfe00402c
- PADCTRL_PIN_MUX_REGC 0xfe004030
- PADCTRL_PIN_MUX_REGD 0xfe004034
- PADCTRL_PIN_MUX_REGE 0xfe004038
- PADCTRL_PIN_MUX_REGF 0xfe00403c
- PADCTRL_PIN_MUX_REGG 0xfe004040
- PADCTRL_PIN_MUX_REGH 0xfe004044
- PADCTRL_PIN_MUX_REGI 0xfe004048
- PADCTRL_PIN_MUX_REGJ 0xfe00404c
- PADCTRL_PIN_MUX_REGK 0xfe004050
- PADCTRL_PIN_MUX_REGL 0xfe004054
- PADCTRL_PIN_MUX_REGM 0xfe004058
- PADCTRL_PIN_MUX_REGN 0xfe00405c
- PADCTRL_PIN_MUX_REGO 0xfe004060

Amlogic Proprietary and Confidential
Copyright © Amlogic. All rights reserved.

Register Description

Table 7-212 PADCTRL_PIN_MUX_REG0

Bit(s)	R/W	Default	Description
31:28	R/W	0	gpioB_7_sel
27:24	R/W	0	gpioB_6_sel
23:20	R/W	0	gpioB_5_sel
19:16	R/W	0	gpioB_4_sel
15:12	R/W	0	gpioB_3_sel
11:8	R/W	0	gpioB_2_sel
7:4	R/W	0	gpioB_1_sel
3:0	R/W	0	gpioB_0_sel

Table 7-213 PADCTRL_PIN_MUX_REG1

Bit(s)	R/W	Default	Description
19:16	R/W	0	gpioB_12_sel
15:12	R/W	0	gpioB_11_sel
11:8	R/W	0	gpioB_10_sel
7:4	R/W	0	gpioB_9_sel
3:0	R/W	0	gpioB_8_sel

Table 7-214 PADCTRL_PIN_MUX_REG2

Bit(s)	R/W	Default	Description
31:28	R/W	0	gpioX_7_sel
27:24	R/W	0	gpioX_6_sel
23:20	R/W	0	gpioX_5_sel
19:16	R/W	0	gpioX_4_sel
15:12	R/W	0	gpioX_3_sel
11:8	R/W	0	gpioX_2_sel
7:4	R/W	0	gpioX_1_sel
3:0	R/W	0	gpioX_0_sel

Table 7-215 PADCTRL_PIN_MUX_REG3

Bit(s)	R/W	Default	Description
31:28	R/W	0	gpioX_15_sel
27:24	R/W	0	gpioX_14_sel
23:20	R/W	0	gpioX_13_sel

Amlogic Proprietary and Confidential
Copyright © Amlogic. All rights reserved.

Bit(s)	R/W	Default	Description
19:16	R/W	0	gpioX_12_sel
15:12	R/W	0	gpioX_11_sel
11:8	R/W	0	gpioX_10_sel
7:4	R/W	0	gpioX_9_sel
3:0	R/W	0	gpioX_8_sel

Table 7-216 PADCTRL_PIN_MUX_REG4

Bit(s)	R/W	Default	Description
15:12	R/W	0	gpioX_19_sel
11:8	R/W	0	gpioX_18_sel
7:4	R/W	0	gpioX_17_sel
3:0	R/W	0	gpioX_16_sel

Table 7-217 PADCTRL_PIN_MUX_REG5

Bit(s)	R/W	Default	Description
31:28	R/W	0	gpioZ_7_sel
27:24	R/W	0	gpioZ_6_sel
23:20	R/W	0	gpioZ_5_sel
19:16	R/W	0	gpioZ_4_sel
15:12	R/W	0	gpioZ_3_sel
11:8	R/W	0	gpioZ_2_sel
7:4	R/W	0	gpioZ_1_sel
3:0	R/W	0	gpioZ_0_sel

Table 7-218 PADCTRL_PIN_MUX_REG6

Bit(s)	R/W	Default	Description
23:20	R/W	0	gpioZ_13_sel
19:16	R/W	0	gpioZ_12_sel
15:12	R/W	0	gpioZ_11_sel
11:8	R/W	0	gpioZ_10_sel
7:4	R/W	0	gpioZ_9_sel
3:0	R/W	0	gpioZ_8_sel

Amlogic Proprietary and Confidential
Copyright © Amlogic. All rights reserved.

Table 7-219 PADCTRL_PIN_MUX_REG7

Bit(s)	R/W	Default	Description
27:24	R/W	0	gpioC_6_sel
23:20	R/W	2	gpioC_5_sel
19:16	R/W	2	gpioC_4_sel
15:12	R/W	0	gpioC_3_sel
11:8	R/W	0	gpioC_2_sel
7:4	R/W	2	gpioC_1_sel
3:0	R/W	2	gpioC_0_sel

Table 7-220 PADCTRL_PIN_MUX_REG8

Bit(s)	R/W	Default	Description
31:28	R/W	0	gpioH_7_sel
27:24	R/W	0	gpioH_6_sel
23:20	R/W	0	gpioH_5_sel
19:16	R/W	0	gpioH_4_sel
15:12	R/W	0	gpioH_3_sel
11:8	R/W	0	gpioH_2_sel
7:4	R/W	0	gpioH_1_sel
3:0	R/W	0	gpioH_0_sel

Table 7-221 PADCTRL_PIN_MUX_REGA

Bit(s)	R/W	Default	Description
31:28	R/W	0	gpioD_7_sel
27:24	R/W	0	gpioD_6_sel
23:20	R/W	0	gpioD_5_sel
19:16	R/W	0	gpioD_4_sel
15:12	R/W	0	gpioD_3_sel
11:8	R/W	0	gpioD_2_sel
7:4	R/W	0	gpioD_1_sel
3:0	R/W	0	gpioD_0_sel

Table 7-222 PADCTRL_PIN_MUX_REGB

Bit(s)	R/W	Default	Description
19:16	R/W	0	gpioD_12_sel
15:12	R/W	0	gpioD_11_sel

Amlogic Proprietary and Confidential
Copyright © Amlogic. All rights reserved.

Bit(s)	R/W	Default	Description
11:8	R/W	0	gpioD_10_sel
7:4	R/W	0	gpioD_9_sel
3:0	R/W	0	gpioD_8_sel

Table 7-223 PADCTRL_PIN_MUX_REGC

Bit(s)	R/W	Default	Description
27:24	R/W	0	gpioE_6_sel
23:20	R/W	0	gpioE_5_sel
19:16	R/W	0	gpioE_4_sel
15:12	R/W	0	gpioE_3_sel
11:8	R/W	0	gpioE_2_sel
7:4	R/W	0	gpioE_1_sel
3:0	R/W	0	gpioE_0_sel

Table 7-224 PADCTRL_PIN_MUX_REGD

Bit(s)	R/W	Default	Description
31:28	R/W	0	gpioM_7_sel
27:24	R/W	0	gpioM_6_sel
23:20	R/W	0	gpioM_5_sel
19:16	R/W	0	gpioM_4_sel
15:12	R/W	0	gpioM_3_sel
11:8	R/W	0	gpioM_2_sel
7:4	R/W	0	gpioM_1_sel
3:0	R/W	0	gpioM_0_sel

Table 7-225 PADCTRL_PIN_MUX_REGE

Bit(s)	R/W	Default	Description
23:20	R/W	0	gpioM_13_sel
19:16	R/W	0	gpioM_12_sel
15:12	R/W	0	gpioM_11_sel
11:8	R/W	0	gpioM_10_sel
7:4	R/W	0	gpioM_9_sel
3:0	R/W	0	gpioM_8_sel

Amlogic Proprietary and Confidential
Copyright © Amlogic. All rights reserved.

Table 7-226 PADCTRL_PIN_MUX_REGF

Bit(s)	R/W	Default	Description
31:28	R/W	0	gpioT_7_sel
27:24	R/W	0	gpioT_6_sel
23:20	R/W	0	gpioT_5_sel
19:16	R/W	0	gpioT_4_sel
15:12	R/W	0	gpioT_3_sel
11:8	R/W	0	gpioT_2_sel
7:4	R/W	0	gpioT_1_sel
3:0	R/W	0	gpioT_0_sel

Table 7-227 PADCTRL_PIN_MUX_REGG

Bit(s)	R/W	Default	Description
31:28	R/W	0	gpioT_15_sel
27:24	R/W	0	gpioT_14_sel
23:20	R/W	0	gpioT_13_sel
19:16	R/W	0	gpioT_12_sel
15:12	R/W	0	gpioT_11_sel
11:8	R/W	0	gpioT_10_sel
7:4	R/W	0	gpioT_9_sel
3:0	R/W	0	gpioT_8_sel

Table 7-228 PADCTRL_PIN_MUX_REGH

Bit(s)	R/W	Default	Description
31:28	R/W	0	gpioT_23_sel
27:24	R/W	0	gpioT_22_sel
23:20	R/W	0	gpioT_21_sel
19:16	R/W	0	gpioT_20_sel
15:12	R/W	0	gpioT_19_sel
11:8	R/W	0	gpioT_18_sel
7:4	R/W	0	gpioT_17_sel
3:0	R/W	0	gpioT_16_sel

Amlogic Proprietary and Confidential
Copyright © Amlogic. All rights reserved.

Table 7-229 PADCTRL_PIN_MUX_REGJ

Bit(s)	R/W	Default	Description
31:28	R/W	0	gpioY_7_sel
27:24	R/W	0	gpioY_6_sel
23:20	R/W	0	gpioY_5_sel
19:16	R/W	0	gpioY_4_sel
15:12	R/W	0	gpioY_3_sel
11:8	R/W	0	gpioY_2_sel
7:4	R/W	0	gpioY_1_sel
3:0	R/W	0	gpioY_0_sel

Table 7-230 PADCTRL_PIN_MUX_REGK

Bit(s)	R/W	Default	Description
31:28	R/W	0	gpioY_15_sel
27:24	R/W	0	gpioY_14_sel
23:20	R/W	0	gpioY_13_sel
19:16	R/W	0	gpioY_12_sel
15:12	R/W	0	gpioY_11_sel
11:8	R/W	0	gpioY_10_sel
7:4	R/W	0	gpioY_9_sel
3:0	R/W	0	gpioY_7_sel

Table 7-231 PADCTRL_PIN_MUX_REGL

Bit(s)	R/W	Default	Description
11:8	R/W	0	gpioY_18_sel
7:4	R/W	0	gpioY_17_sel
3:0	R/W	0	gpioY_16_sel

Table 7-232 PADCTRL_PIN_MUX_REGM

Bit(s)	R/W	Default	Description
31:28	R/W	0	gpioW_7_sel
27:24	R/W	0	gpioW_6_sel
23:20	R/W	0	gpioW_5_sel
19:16	R/W	0	gpioW_4_sel
15:12	R/W	0	gpioW_3_sel
11:8	R/W	0	gpioW_2_sel

Amlogic Proprietary and Confidential
Copyright © Amlogic. All rights reserved.

Bit(s)	R/W	Default	Description
7:4	R/W	0	gpioW_1_sel
3:0	R/W	0	gpioW_0_sel

Table 7-233 PADCTRL_PIN_MUX_REGN

Bit(s)	R/W	Default	Description
31:28	R/W	0	gpioM_15_sel
27:24	R/W	0	gpioM_14_sel
23:20	R/W	0	gpioM_13_sel
19:16	R/W	0	gpioM_12_sel
15:12	R/W	0	gpioM_11_sel
11:8	R/W	0	gpioM_10_sel
7:4	R/W	0	gpioM_9_sel
3:0	R/W	0	gpioM_7_sel

Table 7-234 PADCTRL_PIN_MUX_REGO

Bit(s)	R/W	Default	Description
3:0	R/W	0	gpioM_16_sel

7.9.3.2 PADCTRL_GPIOx Registers

Register Address

The following lists describe the mapping between each register and its address.

- PADCTRL_GPIO_IRQ_CTRL0 0xfe004080
- PADCTRL_GPIO_IRQ_CTRL1 0xfe004084
- PADCTRL_GPIO_IRQ_CTRL2 0xfe004088
- PADCTRL_GPIO_IRQ_CTRL3 0xfe00408c
- PADCTRL_GPIO_IRQ_CTRL4 0xfe004090
- PADCTRL_GPIO_IRQ_CTRL5 0xfe004094
- PADCTRL_GPIO_IRQ_CTRL6 0xfe004098
- PADCTRL_GPIO_IRQ_CTRL7 0xfe00409c
- PADCTRL_GPIOD_I 0xfe0040c0
- PADCTRL_GPIOD_O 0xfe0040c4
- PADCTRL_GPIOD_OEN 0xfe0040c8
- PADCTRL_GPIOD_PULL_EN 0xfe0040cc
- PADCTRL_GPIOD_PULL_UP 0xfe0040d0
- PADCTRL_GPIOD_LOCK 0xfe0040d4
- PADCTRL_GPIOD_PROT 0xfe0040d8

Amlogic Proprietary and Confidential
Copyright © Amlogic. All rights reserved.

- PADCTRL_GPIOD_DS 0xfe0040dc
- PADCTRL_GPIOE_I 0xfe0040e0
- PADCTRL_GPIOE_O 0xfe0040e4
- PADCTRL_GPIOE_OEN 0xfe0040e8
- PADCTRL_GPIOE_PULL_EN 0xfe0040ec
- PADCTRL_GPIOE_PULL_UP 0xfe0040f0
- PADCTRL_GPIOE_LOCK 0xfe0040f4
- PADCTRL_GPIOE_PROT 0xfe0040f8
- PADCTRL_GPIOE_DS 0xfe0040fc
- PADCTRL_GPIOZ_I 0xfe004100
- PADCTRL_GPIOZ_O 0xfe004104
- PADCTRL_GPIOZ_OEN 0xfe004108
- PADCTRL_GPIOZ_PULL_EN 0xfe00410c
- PADCTRL_GPIOZ_PULL_UP 0xfe004110
- PADCTRL_GPIOZ_LOCK 0xfe004114
- PADCTRL_GPIOZ_PROT 0xfe004118
- PADCTRL_GPIOZ_DS 0xfe00411c
- PADCTRL_GPIOH_I 0xfe004120
- PADCTRL_GPIOH_O 0xfe004124
- PADCTRL_GPIOH_OEN 0xfe004128
- PADCTRL_GPIOH_PULL_EN 0xfe00412c
- PADCTRL_GPIOH_PULL_UP 0xfe004130
- PADCTRL_GPIOH_LOCK 0xfe004134
- PADCTRL_GPIOH_PROT 0xfe004138
- PADCTRL_GPIOH_DS 0xfe00413c
- PADCTRL_GPIOC_I 0xfe004140
- PADCTRL_GPIOC_O 0xfe004144
- PADCTRL_GPIOC_OEN 0xfe004148
- PADCTRL_GPIOC_PULL_EN 0xfe00414c
- PADCTRL_GPIOC_PULL_UP 0xfe004150
- PADCTRL_GPIOC_LOCK 0xfe004154
- PADCTRL_GPIOC_PROT 0xfe004158
- PADCTRL_GPIOC_DS 0xfe00415c
- PADCTRL_GPIOB_I 0xfe004160
- PADCTRL_GPIOB_O 0xfe004164
- PADCTRL_GPIOB_OEN 0xfe004168
- PADCTRL_GPIOB_PULL_EN 0xfe00416c
- PADCTRL_GPIOB_PULL_UP 0xfe004170
- PADCTRL_GPIOB_LOCK 0xfe004174
- PADCTRL_GPIOB_PROT 0xfe004178
- PADCTRL_GPIOB_DS 0xfe00417c
- PADCTRL_GPIOX_I 0xfe004180
- PADCTRL_GPIOX_O 0xfe004184
- PADCTRL_GPIOX_OEN 0xfe004188

Amlogic Proprietary and Confidential
Copyright © Amlogic. All rights reserved.

- PADCTRL_GPIOX_PULL_EN 0xfe00418c
- PADCTRL_GPIOX_PULL_UP 0xfe004190
- PADCTRL_GPIOX_LOCK 0xfe004194
- PADCTRL_GPIOX_PROT 0xfe004198
- PADCTRL_GPIOX_DS 0xfe00419c
- PADCTRL_GPIOX_DS_EXT 0xfe0041a0
- PADCTRL_GPIOT_I 0xfe0041c0
- PADCTRL_GPIOT_O 0xfe0041c4
- PADCTRL_GPIOT_OEN 0xfe0041c8
- PADCTRL_GPIOT_PULL_EN 0xfe0041cc
- PADCTRL_GPIOT_PULL_UP 0xfe0041d0
- PADCTRL_GPIOT_LOCK 0xfe0041d4
- PADCTRL_GPIOT_PROT 0xfe0041d8
- PADCTRL_GPIOT_DS 0xfe0041dc
- PADCTRL_GPIOT_DS_EXT 0xfe0041e0
- PADCTRL_GPIOY_I 0xfe004200
- PADCTRL_GPIOY_O 0xfe004204
- PADCTRL_GPIOY_OEN 0xfe004208
- PADCTRL_GPIOY_PULL_EN 0xfe00420c
- PADCTRL_GPIOY_PULL_UP 0xfe004210
- PADCTRL_GPIOY_LOCK 0xfe004214
- PADCTRL_GPIOY_PROT 0xfe004218
- PADCTRL_GPIOY_DS 0xfe00421c
- PADCTRL_GPIOY_DS_EXT 0xfe004220
- PADCTRL_GPIOW_I 0xfe004240
- PADCTRL_GPIOW_O 0xfe004244
- PADCTRL_GPIOW_OEN 0xfe004248
- PADCTRL_GPIOW_PULL_EN 0xfe00424c
- PADCTRL_GPIOW_PULL_UP 0xfe004250
- PADCTRL_GPIOW_LOCK 0xfe004254
- PADCTRL_GPIOW_PROT 0xfe004258
- PADCTRL_GPIOW_DS 0xfe00425c
- PADCTRL_GPIOW_DS_EXT 0xfe004260
- PADCTRL_GPIOM_I 0xfe004280
- PADCTRL_GPIOM_O 0xfe004284
- PADCTRL_GPIOM_OEN 0xfe004288
- PADCTRL_GPIOM_PULL_EN 0xfe00428c
- PADCTRL_GPIOM_PULL_UP 0xfe004290
- PADCTRL_GPIOM_LOCK 0xfe004294
- PADCTRL_GPIOM_PROT 0xfe004298
- PADCTRL_GPIOM_DS 0xfe00429c

Amlogic Proprietary and Confidential
Copyright © Amlogic. All rights reserved.

Register Description

Table 7-235 PADCTRL_GPIO_IRQ_CTRL0

Bit(s)	R/W	Default	Description
31	R/W	0	gpio_irq_en
23:12	R/W	0	gpio_edge_en[11:0] if enable, will generate irq by fall edge or rise edge of gpio
11:0	R/W	0	gpio_intr_pol[11:0] 0: rise edge; 1: fall edge;

Table 7-236 gpio src list

#	src	#	src	#	src	#	src	#	src
159		127	gpioM_12	95	gpioT_4	63	gpioD_6	31	gpioX_11
158		126	gpioM_11	94	gpioT_3	62	gpioD_5	30	gpioX_10
157		125	gpioM_10	93	gpioT_2	61	gpioD_4	29	gpioX_9
156	test_n_i	124	gpioM_9	92	gpioT_1	60	gpioD_3	28	gpioX_8
155	gpioH_7	123	gpioM_8	91	gpioT_0	59	gpioD_2	27	gpioX_7
154	gpioH_6	122	gpioM_7	90	gpioZ_13	58	gpioD_1	26	gpioX_6
153	gpioH_5	121	gpioM_6	89	gpioZ_12	57	gpioD_0	25	gpioX_5
152	gpioH_4	120	gpioM_5	88	gpioZ_11	56	gpioW_16	24	gpioX_4
151	gpioH_3	119	gpioM_4	87	gpioZ_10	55	gpioW_15	23	gpioX_3
150	gpioH_2	118	gpioM_3	86	gpioZ_9	54	gpioW_14	22	gpioX_2
149	gpioH_1	117	gpioM_2	85	gpioZ_8	53	gpioW_13	21	gpioX_1
148	gpioH_0	116	gpioM_1	84	gpioZ_7	52	gpioW_12	20	gpioX_0
147	gpioY_18	115	gpioM_0	83	gpioZ_6	51	gpioW_11	19	gpioC_6
146	gpioY_17	114	gpioT_23	82	gpioZ_5	50	gpioW_10	18	gpioC_5
145	gpioY_16	113	gpioT_22	81	gpioZ_4	49	gpioW_9	17	gpioC_4
144	gpioY_15	112	gpioT_21	80	gpioZ_3	48	gpioW_8	16	gpioC_3

Amlogic Proprietary and Confidential
Copyright © Amlogic. All rights reserved.

#	src	#	src	#	src	#	src	#	src
143	gpioY_14	111	gpioT_20	79	gpioZ_2	47	gpioW_7	15	gpioC_2
142	gpioY_13	110	gpioT_19	78	gpioZ_1	46	gpioW_6	14	gpioC_1
141	gpioY_12	109	gpioT_18	77	gpioZ_0	45	gpioW_5	13	gpioC_0
140	gpioY_11	108	gpioT_17	76	gpioE_6	44	gpioW_4	12	gpioB_12
139	gpioY_10	107	gpioT_16	75	gpioE_5	43	gpioW_3	11	gpioB_11
138	gpioY_9	106	gpioT_15	74	gpioE_4	42	gpioW_2	10	gpioB_10
137	gpioY_8	105	gpioT_14	73	gpioE_3	41	gpioW_1	9	gpioB_9
136	gpioY_7	104	gpioT_13	72	gpioE_2	40	gpioW_0	8	gpioB_8
135	gpioY_6	103	gpioT_12	71	gpioE_1	39	gpioX_19	7	gpioB_7
134	gpioY_5	102	gpioT_11	70	gpioE_0	38	gpioX_18	6	gpioB_6
133	gpioY_4	101	gpioT_10	69	gpioD_12	37	gpioX_17	5	gpioB_5
132	gpioY_3	100	gpioT_9	68	gpioD_11	36	gpioX_16	4	gpioB_4
131	gpioY_2	99	gpioT_8	67	gpioD_10	35	gpioX_15	3	gpioB_3
130	gpioY_1	98	gpioT_7	66	gpioD_9	34	gpioX_14	2	gpioB_2
129	gpioY_0	97	gpioT_6	65	gpioD_8	33	gpioX_13	1	gpioB_1
128	gpioM_13	96	gpioT_5	64	gpioD_7	32	gpioX_12	0	gpioB_0

Table 7-237 PADCTRL_GPIO_IRQ_CTRL1

Bit(s)	R/W	Default	Description
27	R/W	0	gpio_irq1 in filter clk select: 0:8M; 1:cts_sys_clk;
26:24	R/W	0	gpio_irq1 in filter cycle count;
23:16	R/W	0	gpio_irq1; source select; from gpio src list
11	R/W	0	gpio_irq0 in filter clk select:

Amlogic Proprietary and Confidential
Copyright © Amlogic. All rights reserved.

Bit(s)	R/W	Default	Description
			0:8M; 1:cts_sys_clk;
10:8	R/W	0	gpio_irq0 in filter cycle count;
7:0	R/W	0	gpio_irq0; source select; from gpio src list

Table 7-238 PADCTRL_GPIO_IRQ_CTRL2

Bit(s)	R/W	Default	Description
27	R/W	0	gpio_irq3 in filter clk select: 0:8M; 1:cts_sys_clk;
26:24	R/W	0	gpio_irq3 in filter cycle count;
23:16	R/W	0	gpio_irq3; source select; from gpio src list
11	R/W	0	gpio_irq2 in filter clk select: 0:8M; 1:cts_sys_clk;
10:8	R/W	0	gpio_irq2 in filter cycle count;
7:0	R/W	0	gpio_irq2; source select; from gpio src list

Table 7-239 PADCTRL_GPIO_IRQ_CTRL3

Bit(s)	R/W	Default	Description
27	R/W	0	gpio_irq5 in filter clk select: 0:8M; 1:cts_sys_clk;
26:24	R/W	0	gpio_irq5 in filter cycle count;
23:16	R/W	0	gpio_irq5; source select; from gpio src list
11	R/W	0	gpio_irq4 in filter clk select: 0:8M; 1:cts_sys_clk;
10:8	R/W	0	gpio_irq4 in filter cycle count;
7:0	R/W	0	gpio_irq4; source select; from gpio src list

Amlogic Proprietary and Confidential
Copyright © Amlogic. All rights reserved.

Table 7-240 PADCTRL_GPIO_IRQ_CTRL4

Bit(s)	R/W	Default	Description
27	R/W	0	gpio_irq7 in filter clk select: 0:8M; 1:cts_sys_clk;
26:24	R/W	0	gpio_irq7 in filter cycle count;
23:16	R/W	0	gpio_irq7; source select; from gpio src list
11	R/W	0	gpio_irq6 in filter clk select: 0:8M; 1:cts_sys_clk;
10:8	R/W	0	gpio_irq6 in filter cycle count;
7:0	R/W	0	gpio_irq6; source select; from gpio src list

Table 7-241 PADCTRL_GPIO_IRQ_CTRL5

Bit(s)	R/W	Default	Description
27	R/W	0	gpio_irq9 in filter clk select: 0:8M; 1:cts_sys_clk;
26:24	R/W	0	gpio_irq9 in filter cycle count;
23:16	R/W	0	gpio_irq9; source select; from gpio src list
11	R/W	0	gpio_irq8 in filter clk select: 0:8M; 1:cts_sys_clk;
10:8	R/W	0	gpio_irq8 in filter cycle count;
7:0	R/W	0	gpio_irq8; source select; from gpio src list

Table 7-242 PADCTRL_GPIO_IRQ_CTRL6

Bit(s)	R/W	Default	Description
27	R/W	0	gpio_irq11 in filter clk select: 0:8M; 1:cts_sys_clk;
26:24	R/W	0	gpio_irq11 in filter cycle count;
23:16	R/W	0	gpio_irq11; source select; from gpio src list

Amlogic Proprietary and Confidential
Copyright © Amlogic. All rights reserved.

Bit(s)	R/W	Default	Description
11	R/W	0	gpio_irq10 in filter clk select: 0:8M; 1:cts_sys_clk;
10:8	R/W	0	gpio_irq10 in filter cycle count;
7:0	R/W	0	gpio_irq10; source select; from gpio src list

Table 7-243 PADCTRL_GPIO_IRQ_CTRL7

Bit(s)	R/W	Default	Description
11:0	R/W	0	gpio_both_edge_en[11:0] if enable, will generate irq by both fall edge and rise edge of gpio

Table 7-244 PADCTRL_GPIOZ_I

Bit(s)	R/W	Default	Description
13:0	R	0	

Table 7-245 PADCTRL_GPIOZ_O

Bit(s)	R/W	Default	Description
13:0	R/W	0x3FFF	

Table 7-246 PADCTRL_GPIOZ_OEN

Bit(s)	R/W	Default	Description
13:0	R/W	0x3FFF	

Table 7-247 PADCTRL_GPIOZ_PULL_EN

Bit(s)	R/W	Default	Description
13:0	R/W	0x3FFF	

Table 7-248 PADCTRL_GPIOZ_PULL_UP

Bit(s)	R/W	Default	Description
13:0	R/W	0x01FF	

Table 7-249 PADCTRL_GPIOZ_DS

Bit(s)	R/W	Default	Description
31:0	R/W	0xFFE_AAAA	

Amlogic Proprietary and Confidential
Copyright © Amlogic. All rights reserved.

Table 7-250 PADCTRL_GPIOZ_LOCK

Bit(s)	R/W	Default	Description
13:0	R/W	0x0	each bit can lock one pad's oen/pullen/pullup/ds bit0 lock gpio*_0 bit1 lock gpio*_1 … can write 1 only

Table 7-251 PADCTRL_GPIOZ_PROT

Bit(s)	R/W	Default	Description
13:0	R/W	0x0	each bit can lock one pad's oen/pullen/pullup/ds bit0 lock gpio*_0 bit1 lock gpio*_1 … can write 0 or 1

Table 7-252 PADCTRL_GPIOX_I

Bit(s)	R/W	Default	Description
19:0	R	0	

Table 7-253 PADCTRL_GPIOX_O

Bit(s)	R/W	Default	Description
19:0	R/W	0xF_FFFF	

Table 7-254 PADCTRL_GPIOX_OEN

Bit(s)	R/W	Default	Description
19:0	R/W	0xF_FFFF	

Table 7-255 PADCTRL_GPIOX_PULL_EN

Bit(s)	R/W	Default	Description
19:0	R/W	0x7_FFFF	

Table 7-256 PADCTRL_GPIOX_PULL_UP

Bit(s)	R/W	Default	Description
19:0	R/W	0x5_FFBF	

Amlogic Proprietary and Confidential
Copyright © Amlogic. All rights reserved.

Table 7-257 PADCTRL_GPIOX_DS

Bit(s)	R/W	Default	Description
31:0	R/W	0xAAA-A_AAAA	

Table 7-258 PADCTRL_GPIOX_DS_EXT

Bit(s)	R/W	Default	Description
7:0	R/W	0xAA	

Table 7-259 PADCTRL_GPIOX_LOCK

Bit(s)	R/W	Default	Description
19:0	R/W	0x0	each bit can lock one pad's oen/pullen/pullup/ds bit0 lock gpio*_0 bit1 lock gpio*_1 … can write 1 only

Table 7-260 PADCTRL_GPIOX_PROT

Bit(s)	R/W	Default	Description
19:0	R/W	0x0	each bit can lock one pad's oen/pullen/pullup/ds bit0 lock gpio*_0 bit1 lock gpio*_1 … can write 0 or 1

Table 7-261 PADCTRL_GPIOH_I

Bit(s)	R/W	Default	Description
7:0	R	0	

Table 7-262 PADCTRL_GPIOH_O

Bit(s)	R/W	Default	Description
7:0	R/W	0x1FF	

Table 7-263 PADCTRL_GPIOH_OEN

Bit(s)	R/W	Default	Description
7:0	R/W	0x1FF	

Table 7-264 PADCTRL_GPIOH_PULL_EN

Bit(s)	R/W	Default	Description
7:0	R/W	0x3D	

Amlogic Proprietary and Confidential
Copyright © Amlogic. All rights reserved.

Table 7-265 PADCTRL_GPIOH_PULL_UP

Bit(s)	R/W	Default	Description
7:0	R/W	0x09	

Table 7-266 PADCTRL_GPIOH_DS

Bit(s)	R/W	Default	Description
15:0	R/W	0xAAAA	

Table 7-267 PADCTRL_GPIOH_LOCK

Bit(s)	R/W	Default	Description
7:0	R/W	0x0	each bit can lock one pad's oen/pullen/pullup/ds bit0 lock gpio*_0 bit1 lock gpio*_1 … can write 1 only

Table 7-268 PADCTRL_GPIOH_PROT

Bit(s)	R/W	Default	Description
7:0	R/W	0x0	each bit can lock one pad's oen/pullen/pullup/ds bit0 lock gpio*_0 bit1 lock gpio*_1 … can write 0 or 1

Table 7-269 PADCTRL_GPIOD_I

Bit(s)	R/W	Default	Description
12:0	R	0	

Table 7-270 PADCTRL_GPIOD_O

Bit(s)	R/W	Default	Description
12:0	R/W	0x1FFF	

Table 7-271 PADCTRL_GPIOD_OEN

Bit(s)	R/W	Default	Description
12:0	R/W	0x1FFF	

Amlogic Proprietary and Confidential
Copyright © Amlogic. All rights reserved.

Table 7-272 PADCTRL_GPIOD_PULL_EN

Bit(s)	R/W	Default	Description
12:0	R/W	0xFFF	

Table 7-273 PADCTRL_GPIOD_PULL_UP

Bit(s)	R/W	Default	Description
12:0	R/W	0x42F	

Table 7-274 PADCTRL_GPIOD_DS

Bit(s)	R/W	Default	Description
25:0	R/W	0x2AA_AAAA	

Table 7-275 PADCTRL_GPIOD_LOCK

Bit(s)	R/W	Default	Description
12:0	R/W	0x0	each bit can lock one pad's oen/pullen/pullup/ds bit0 lock gpio*_0 bit1 lock gpio*_1 … can write 1 only

Table 7-276 PADCTRL_GPIOD_PROT

Bit(s)	R/W	Default	Description
12:	R/W	0x0	each bit can lock one pad's oen/pullen/pullup/ds bit0 lock gpio*_0 bit1 lock gpio*_1 … can write 0 or 1

Table 7-277 PADCTRL_GPIOE_I

Bit(s)	R/W	Default	Description
6:0	R	0	

Table 7-278 PADCTRL_GPIOE_O

Bit(s)	R/W	Default	Description
6:0	R/W	0x7F	

Table 7-279 PADCTRL_GPIOE_OEN

Bit(s)	R/W	Default	Description
6:0	R/W	0x7F	

Amlogic Proprietary and Confidential
Copyright © Amlogic. All rights reserved.

Table 7-280 PADCTRL_GPIOE_PULL_EN

Bit(s)	R/W	Default	Description
6:0	R/W	0x4	

Table 7-281 PADCTRL_GPIOE_PULL_UP

Bit(s)	R/W	Default	Description
6:0	R/W	0x0	

Table 7-282 PADCTRL_GPIOE_DS

Bit(s)	R/W	Default	Description
13:0	R/W	0x3FFF	

Table 7-283 PADCTRL_GPIOE_LOCK

Bit(s)	R/W	Default	Description
6:0	R/W	0x0	each bit can lock one pad's oen/pullen/pullup/ds bit0 lock gpio*_0 bit1 lock gpio*_1 … can write 1 only

Table 7-284 PADCTRL_GPIOE_PROT

Bit(s)	R/W	Default	Description
6:0	R/W	0x0	each bit can lock one pad's oen/pullen/pullup/ds bit0 lock gpio*_0 bit1 lock gpio*_1 … can write 0 or 1

Table 7-285 PADCTRL_GPIOC_I

Bit(s)	R/W	Default	Description
6:0	R	0	

Table 7-286 PADCTRL_GPIOC_O

Bit(s)	R/W	Default	Description
6:0	R/W	0x7FF	

Amlogic Proprietary and Confidential
Copyright © Amlogic. All rights reserved.

Table 7-287 PADCTRL_GPIOC_OEN

Bit(s)	R/W	Default	Description
6:0	R/W	0x7FF	

Table 7-288 PADCTRL_GPIOC_PULL_EN

Bit(s)	R/W	Default	Description
6:0	R/W	0x7F	

Table 7-289 PADCTRL_GPIOC_PULL_UP

Bit(s)	R/W	Default	Description
6:0	R/W	0x7F	

Table 7-290 PADCTRL_GPIOC_DS

Bit(s)	R/W	Default	Description
13:0	R/W	0x3FFF	

Table 7-291 PADCTRL_GPIOC_LOCK

Bit(s)	R/W	Default	Description
6:0	R/W	0x0	each bit can lock one pad’s oen/pullen/pullup/ds bit0 lock gpio*_0 bit1 lock gpio*_1 … can write 1 only

Table 7-292 PADCTRL_GPIOC_PROT

Bit(s)	R/W	Default	Description
6:0	R/W	0x0	each bit can lock one pad’s oen/pullen/pullup/ds bit0 lock gpio*_0 bit1 lock gpio*_1 … can write 0 or 1

Table 7-293 PADCTRL_GPIOB_I

Bit(s)	R/W	Default	Description
13:0	R	0	

Table 7-294 PADCTRL_GPIOB_O

Bit(s)	R/W	Default	Description
13:0	R/W	0x3FFF	

Amlogic Proprietary and Confidential
Copyright © Amlogic. All rights reserved.

Table 7-295 PADCTRL_GPIOB_OEN

Bit(s)	R/W	Default	Description
13:0	R/W	0x3FFF	

Table 7-296 PADCTRL_GPIOB_PULL_EN

Bit(s)	R/W	Default	Description
13:0	R/W	0x1FFF	

Table 7-297 PADCTRL_GPIOB_PULL_UP

Bit(s)	R/W	Default	Description
13:0	R/W	0x15FF	

Table 7-298 PADCTRL_GPIOB_DS

Bit(s)	R/W	Default	Description
25:0	R/W	0x3FF_FFFF	

Table 7-299 PADCTRL_GPIOB_LOCK

Bit(s)	R/W	Default	Description
13:0	R/W	0x0	each bit can lock one pad’s oen/pullen/pullup/ds bit0 lock gpio*_0 bit1 lock gpio*_1 … can write 1 only

Table 7-300 PADCTRL_GPIOB_PROT

Bit(s)	R/W	Default	Description
13:0	R/W	0x0	each bit can lock one pad’s oen/pullen/pullup/ds bit0 lock gpio*_0 bit1 lock gpio*_1 … can write 0 or 1

Table 7-301 PADCTRL_GPIOX_I

Bit(s)	R/W	Default	Description
19:0	R	0	

Table 7-302 PADCTRL_GPIOT_O

Bit(s)	R/W	Default	Description
23:0	R/W	0xFF_FFFF	

Amlogic Proprietary and Confidential
Copyright © Amlogic. All rights reserved.

Table 7-303 PADCTRL_GPIOT_OEN

Bit(s)	R/W	Default	Description
23:0	R/W	0xFF_FFFF	

Table 7-304 PADCTRL_GPIOT_PULL_EN

Bit(s)	R/W	Default	Description
23:0	R/W	0xFF_FFFF	

Table 7-305 PADCTRL_GPIOT_PULL_UP

Bit(s)	R/W	Default	Description
23:0	R/W	0x0	

Table 7-306 PADCTRL_GPIOT_DS

Bit(s)	R/W	Default	Description
31:0	R/W	0xBEA-A_AAAF	

Table 7-307 PADCTRL_GPIOT_DS_EXT

Bit(s)	R/W	Default	Description
15:0	R/W	0xABAA	

Table 7-308 PADCTRL_GPIOT_LOCK

Bit(s)	R/W	Default	Description
23:0	R/W	0x0	each bit can lock one pad’s oen/pullen/pullup/ds bit0 lock gpio*_0 bit1 lock gpio*_1 … can write 1 only

Table 7-309 PADCTRL_GPIOT_PROT

Bit(s)	R/W	Default	Description
23:0	R/W	0x0	each bit can lock one pad’s oen/pullen/pullup/ds bit0 lock gpio*_0 bit1 lock gpio*_1 … can write 0 or 1

Amlogic Proprietary and Confidential
Copyright © Amlogic. All rights reserved.

Table 7-310 PADCTRL_GPIOM_I

Bit(s)	R/W	Default	Description
13:0	R	0	

Table 7-311 PADCTRL_GPIOM_O

Bit(s)	R/W	Default	Description
13:0	R/W	0x3FFF	

Table 7-312 PADCTRL_GPIOM_OEN

Bit(s)	R/W	Default	Description
13:0	R/W	0x3FFF	

Table 7-313 PADCTRL_GPIOM_PULL_EN

Bit(s)	R/W	Default	Description
13:0	R/W	0x3FFF	

Table 7-314 PADCTRL_GPIOM_PULL_UP

Bit(s)	R/W	Default	Description
13:0	R/W	0x30C0	

Table 7-315 PADCTRL_GPIOM_DS

Bit(s)	R/W	Default	Description
27:0	R/W	0xABA_ ABAA	

Table 7-316 PADCTRL_GPIOM_LOCK

Bit(s)	R/W	Default	Description
13:0	R/W	0x0	each bit can lock one pad’s oen/pullen/pullup/ds bit0 lock gpio*_0 bit1 lock gpio*_1 … can write 1 only

Table 7-317 PADCTRL_GPIOM_PROT

Bit(s)	R/W	Default	Description
13:0	R/W	0x0	each bit can lock one pad’s oen/pullen/pullup/ds bit0 lock gpio*_0 bit1 lock gpio*_1 … can write 0 or 1

Amlogic Proprietary and Confidential
Copyright © Amlogic. All rights reserved.

Table 7-318 PADCTRL_GPIOY_I

Bit(s)	R/W	Default	Description
18:0	R	0	

Table 7-319 PADCTRL_GPIOY_O

Bit(s)	R/W	Default	Description
18:0	R/W	0x7_FFFF	

Table 7-320 PADCTRL_GPIOY_OEN

Bit(s)	R/W	Default	Description
18:0	R/W	0x7_FFFF	

Table 7-321 PADCTRL_GPIOY_PULL_EN

Bit(s)	R/W	Default	Description
18:0	R/W	0x7_FFFF	

Table 7-322 PADCTRL_GPIOY_PULL_UP

Bit(s)	R/W	Default	Description
18:0	R/W	0x6_BC78	

Table 7-323 PADCTRL_GPIOY_DS

Bit(s)	R/W	Default	Description
31:0	R/W	0xAAA-A_AABA	

Table 7-324 PADCTRL_GPIOY_DS_EXT

Bit(s)	R/W	Default	Description
5:0	R/W	0x2A	

Amlogic Proprietary and Confidential
Copyright © Amlogic. All rights reserved.

Table 7-325 PADCTRL_GPIOY_LOCK

Bit(s)	R/W	Default	Description
18:0	R/W	0x0	each bit can lock one pad's oen/pullen/pullup/ds bit0 lock gpio*_0 bit1 lock gpio*_1 … can write 1 only

Table 7-326 PADCTRL_GPIOY_PROT

Bit(s)	R/W	Default	Description
18:0	R/W	0x0	each bit can lock one pad's oen/pullen/pullup/ds bit0 lock gpio*_0 bit1 lock gpio*_1 … can write 0 or 1

Table 7-327 PADCTRL_GPIOW_I

Bit(s)	R/W	Default	Description
16:0	R	0	

Table 7-328 PADCTRL_GPIOW_O

Bit(s)	R/W	Default	Description
16:0	R/W	0x1_FFFF	

Table 7-329 PADCTRL_GPIOW_OEN

Bit(s)	R/W	Default	Description
16:0	R/W	0x1_FFFF	

Table 7-330 PADCTRL_GPIOW_PULL_EN

Bit(s)	R/W	Default	Description
16:0	R/W	0x1_FFFF	

Table 7-331 PADCTRL_GPIOW_PULL_UP

Bit(s)	R/W	Default	Description
16:0	R/W	0x0	

Amlogic Proprietary and Confidential
Copyright © Amlogic. All rights reserved.

Table 7-332 PADCTRL_GPIOW_DS

Bit(s)	R/W	Default	Description
31:0	R/W	0xAAA-A_AAAA	

Table 7-333 PADCTRL_GPIOW_DS_EXT

Bit(s)	R/W	Default	Description
1:0	R/W	0x2	

Table 7-334 PADCTRL_GPIOW_LOCK

Bit(s)	R/W	Default	Description
16:0	R/W	0x0	each bit can lock one pad's oen/pullen/pullup/ds bit0 lock gpio*_0 bit1 lock gpio*_1 … can write 1 only

Table 7-335 PADCTRL_GPIOW_PROT

Bit(s)	R/W	Default	Description
15:0	R/W	0x0	each bit can lock one pad's oen/pullen/pullup/ds bit0 lock gpio*_0 bit1 lock gpio*_1 … can write 0 or 1

7.9.3.3 PADCTRL_LOCK/PROT_PIN_MUX Registers

Register Address

The following lists describe the mapping between each register and its address.

- PADCTRL_LOCK_PIN_MUX0 0xfe004340
- PADCTRL_LOCK_PIN_MUX1 0xfe004344
- PADCTRL_LOCK_PIN_MUX2 0xfe004348
- PADCTRL_LOCK_PIN_MUX3 0xfe00434c
- PADCTRL_LOCK_PIN_MUX4 0xfe004350
- PADCTRL_LOCK_PIN_MUX5 0xfe004354
- PADCTRL_LOCK_PIN_MUX6 0xfe004358
- PADCTRL_PROT_PIN_MUX0 0xfe004360
- PADCTRL_PROT_PIN_MUX1 0xfe004364
- PADCTRL_PROT_PIN_MUX2 0xfe004368
- PADCTRL_PROT_PIN_MUX3 0xfe00436c
- PADCTRL_PROT_PIN_MUX4 0xfe004370
- PADCTRL_PROT_PIN_MUX5 0xfe004374
- PADCTRL_PROT_PIN_MUX6 0xfe004378

Amlogic Proprietary and Confidential
Copyright © Amlogic. All rights reserved.

Register Description

For the following registers, lock and prot are two different registers which can lock one pin_mux_sel, the difference is that lock can write 1 only; prot can write 0 or 1;

Table 7-336 PADCTRL_LOCK/PROT_PIN_MUX_REG0

Bit(s)	R/W	Default	Description
31	R/W	0	lock gpioX_15
…	R/W	0	…
16	R/W	0	lock gpioX_0
12	R/W	0	lock gpioB_12
…	R/W	0	…
0	R/W	0	lock gpioB_0

Table 7-337 PADCTRL_LOCK/PROT_PIN_MUX_REG1

Bit(s)	R/W	Default	Description
30	R/W	0	lock gpioC_6
…	R/W	0	…
24	R/W	0	lock gpioC_0
21	R/W	0	lock gpioZ_13
…	R/W	0	…
8	R/W	0	lock gpioZ_0
3	R/W	0	lock gpioX_19
…	R/W	0	…
0	R/W	0	lock gpioX_16

Table 7-338 PADCTRL_LOCK/PROT_PIN_MUX_REG2

Bit(s)	R/W	Default	Description
28	R/W	0	lock gpioH_12
…	R/W	0	…
15	R/W	0	lock gpioD_0
7	R/W	0	lock gpioH_7
…	R/W	0	…
0	R/W	0	lock gpioH_0

Table 7-339 PADCTRL_LOCK/PROT_PIN_MUX_REG3

Bit(s)	R/W	Default	Description
31	R/W	0	lock gpioT_7
…	R/W	0	…

Amlogic Proprietary and Confidential
Copyright © Amlogic. All rights reserved.

Bit(s)	R/W	Default	Description
24	R/W	0	lock gpioT_0
21	R/W	0	lock gpioM_13
…	R/W	0	…
8	R/W	0	lock gpioM_0
6	R/W	0	lock gpioE_6
…	R/W	0	…
0	R/W	0	lock gpioE_0

Table 7-340 PADCTRL_LOCK/PROT_PIN_MUX_REG4

Bit(s)	R/W	Default	Description
31	R/W	0	lock gpioY_7
…	R/W	0	…
24	R/W	0	lock gpioY_0
15	R/W	0	lock gpioT_23
…	R/W	0	…
0	R/W	0	lock gpioT_0

Table 7-341 PADCTRL_LOCK/PROT_PIN_MUX_REG5

Bit(s)	R/W	Default	Description
31	R/W	0	lock gpioW_15
…	R/W	0	…
15	R/W	0	lock gpioW_0
10	R/W	0	lock gpioY_18
…	R/W	0	…
0	R/W	0	lock gpioY_8

Table 7-342 PADCTRL_LOCK/PROT_PIN_MUX_REG6

Bit(s)	R/W	Default	Description
0	R/W	0	lock gpioW_16

7.9.3.4 Other PADCTRL Registers

Register Address

The following lists describe the mapping between each register and its address.

- PADCTRL_WORLD_SYNC_CTRL0 0xfe0040a0

Amlogic Proprietary and Confidential
Copyright © Amlogic. All rights reserved.

- PADCTRL_GPIO_MSR_CTRL0 0xfe0040a4
- PADCTRL_MISC_CTRL0 0xfe0040a8
- PADCTRL_WD_RSTO_CTRL 0xfe0040ac
- PADCTRL_BL_CTRL 0xfe0040b0
- PADCTRL_UART_DISABLE_CTRL 0xfe0040b4
- PADCTRL_TESTN_I 0xfe0042c0
- PADCTRL_TESTN_O 0xfe0042c4
- PADCTRL_TESTN_OEN 0xfe0042c8
- PADCTRL_TESTN_PULL_EN 0xfe0042cc
- PADCTRL_TESTN_PULL_UP 0xfe0042d0
- PADCTRL_TESTN_LOCK 0xfe0042d4
- PADCTRL_TESTN_PROT 0xfe0042d8
- PADCTRL_TESTN_DS 0xfe0042dc
- PADCTRL_MUTE_CTRL 0xfe004380
- PADCTRL_MUTE_TDM_DISA 0xfe004384
- PADCTRL_DEBUG_SEL 0xfe004388

Register Description

Table 7-343 PADCTRL_WORLDSYNC_CTRL0

Bit(s)	R/W	Default	Description
8	R/W	0	world_sync_i enable
7:0	R/W	0	source select; from gpio src list

Table 7-344 PADCTRL_GPIO_MSR_CTRL0

Bit(s)	R/W	Default	Description
8	R/W	0	gpio_msr enable
7:0	R/W	0	source select; from gpio src list

Table 7-345 PADCTRL_MISC_CTRL0

Bit(s)	R/W	Default	Description
4	R/W	0x0	1: enable PWR_ON signal from PWR_CTRL to gpioD_10
1	R/W	0x0	1: select JTAG_TDI/TMS/TCK from PAD_JTAG_A
0	R/W	0x0	1: enable PWR_ON signal from PWR_CTRL to TEST_N; need set PADCTRL_ TESTN_O to 1 first.

Table 7-346 PADCTRL_TESTN_I

Bit(s)	R/W	Default	Description
0	R	0	

Amlogic Proprietary and Confidential
Copyright © Amlogic. All rights reserved.

Table 7-347 PADCTRL_TESTN_O

Bit(s)	R/W	Default	Description
0	R/W	0	

Table 7-348 PADCTRL_TESTN_OEN

Bit(s)	R/W	Default	Description
0	R/W	1	

Table 7-349 PADCTRL_TESTN_PULL_EN

Bit(s)	R/W	Default	Description
0	R/W	1	

Table 7-350 PADCTRL_TESTN_PULL_UP

Bit(s)	R/W	Default	Description
0	R/W	1	

Table 7-351 PADCTRL_TESTN_DS

Bit(s)	R/W	Default	Description
1:0	R/W	2	

Table 7-352 PADCTRL_TESTN_LOCK

Bit(s)	R/W	Default	Description
0	R/W	0x0	each bit can lock one pad’s oen/pullen/pullup/ds bit0 lock gpio*_0 bit1 lock gpio*_1 … can write 1 only

Table 7-353 PADCTRL_TESTN_PROT

Bit(s)	R/W	Default	Description
0	R/W	0x0	each bit can lock one pad’s oen/pullen/pullup/ds bit0 lock gpio*_0 bit1 lock gpio*_1 … can write 0 or 1

Table 7-354 PADCTRL_MUTE_CTRL

Bit(s)	R/W	Default	Description
31	R/W	0	lock_pinmux_key, if 1 will lock gpioE_2_sel as 5, input mute_key only
30	R/W	0	lock_pinmux_en, if 1 will lock gpioD_2_sel as 5, output mute_en only

Amlogic Proprietary and Confidential
Copyright © Amlogic. All rights reserved.

Bit(s)	R/W	Default	Description
29	R/W	0	mute_mode: 0: detect mute_key as level; 1: detect mute_key as pulse;
17:16	R/W	0	mute_mask[1:0]; bit1: mute acodec bit0: mute pdm;
11:8	R/W	0	filter_stable[3:0]; for captured data, if bit(stable+1)=1 and bit(stable to 0) are all 0, that's mean detected one pulse.
7:0	R/W	0	filter_period[7:0], unit is ms, will capture mute_key when cnt=period;

Table 7-355 PADCTRL_MUTE_TDM_DISA

Bit(s)	R/W	Default	Description
31	R/W	0	mute TDM_D31 to 1
…	R/W	0	…
1	R/W	0	mute TDM_D1 to 1
0	R/W	0	mute TDM_D0 to 1

Table 7-356 PADCTRL_UART_DISABLE_CTRL

Bit(s)	R/W	Default	Description
13	R/W	0	uart_F_rx disable
12	R/W	0	uart_E_rx disable
11	R/W	0	uart_D_rx disable
10	R/W	0	uart_C_rx disable
9	R/W	0	uart_B_rx disable
8	R/W	0	uart_A_rx disable
5	R/W	0	uart_F_tx disable
4	R/W	0	uart_E_tx disable
3	R/W	0	uart_D_tx disable
2	R/W	0	uart_C_tx disable
1	R/W	0	uart_B_tx disable
0	R/W	0	uart_A_tx disable

Amlogic Proprietary and Confidential
Copyright © Amlogic. All rights reserved.

Table 7-357 PADCTRL_DEBUG_SEL

Bit(s)	R/W	Default	Description
16	R/W	0x0	1: enable debug_in to eth_debug_in;
3:0	R/W	0x0	debug out sel: 1:sel eth_debug_out; 2:sel ap trace;debug_o_17=trace_clk;debug_o_16=trace_ctrl;debug_o_15_0= trace_out; 4:sel earcrx_ana_o; 5:sel earcrx_dig_o; 6:sel acodec_debug_bus; 7:sel earctx_debug_dig_o; 8:sel isp_debug_dig_o 9:sel htx_debug_gpio

Table 7-358 PADCTRL_CCI_REG

Bit(s)	R/W	Default	Description
31	R/W	0	pwr_on_cci value before fsm in P_WAIT_OTP
30	R/W	0	isp_en_ccivalue before fsm in P_WAIT_OTP
29	R/W	0	foc_rst_cci value before fsm in P_PROD_MODE
19:0	R/W	0	cci mem_pd

Table 7-359 PADCTRL_WD_RST0_CTRL

Bit(s)	R/W	Default	Description
1:0	WR	0	wd_rst_o_sel ,gpio single output sel : 00 : sec_wd_gpio | wd_gpio 01:sec_wd_gpio&wd_gpio 10:sec_wd_gpio 11:wd_gpio

Table 7-360 PADCTRL_BL_CTRL

Bit(s)	R/W	Default	Description
3:2	WR	0	mod_3d_sync_out_sel ,gpio single output sel : 00:mod_3d_sync_out_0 01:mod_3d_sync_out_1 10:mod_3d_sync_out_2 11:0
1:0	WR	0	mod_pwm_vs sel ,gpio single output sel : 00:mod_pwm_vs_0 01:mod_pwm_vs_1 10:mod_pwm_vs_2 11:0

7.10 Interrupt Control

Amlogic Proprietary and Confidential
Copyright © Amlogic. All rights reserved.

7.10.1 Overview

Generic Interrupt Controller (GIC) is a centralized resource that supports and manages interrupts in a system. For more details about GIC, please refer to the ARM GIC Architecture Specification.

The irq_ctrl function includes following aspects:

- collect all irq source together and sync it;
- add invert or latch if needed;
- send to different destination after masked;
- all registers are TEE W/R only except REG_CLR;
- all registers can be locked except REG_CLR;

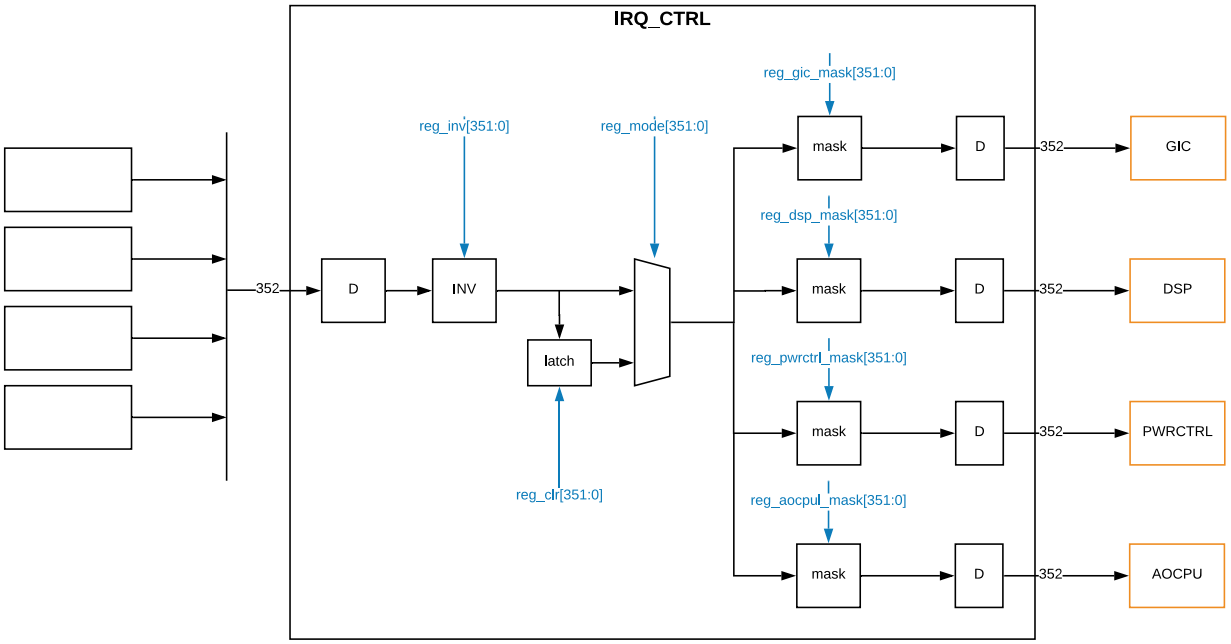

7.10.2 Interrupt Source

There are 351 interrupt sources in the chip. The control Bits of interrupts are listed in the following table.

GIC Bit	Interrupt Source
351	reg_soft_irq[7]
350	reg_soft_irq[6]
349	reg_soft_irq[5]
348	reg_soft_irq[4]
347	reg_soft_irq[3]
346	reg_soft_irq[2]
345	reg_soft_irq[1]
344	reg_soft_irq[0]
343	1'b0
342	ddr1_phy_irq

GIC Bit	Interrupt Source
341	ddr_phy_irq
340	eth_phy_irq_or
339	dmc1_sec_irq
338	dmc1_test_irq
337	dmc1_prot_irq
336	dmc1_mon_irq
335	dmc_sec_irq
334	dmc_test_irq
333	dmc_prot_irq
332	dmc_mon_irq

GIC Bit	Interrupt Source
331	i2c_m_ao_b_irq
330	i2c_m_ao_a_irq
329	eth_qos_irq[9]
328	eth_qos_irq[8]
327	eth_qos_irq[7]
326	eth_qos_irq[6]
325	eth_qos_irq[5]
324	eth_qos_irq[4]
323	eth_qos_irq[3]
322	eth_qos_irq[2]

Amlogic Proprietary and Confidential
Copyright © Amlogic. All rights reserved.

GIC Bit	Interrupt Source
321	eth_qos_irq[1]
320	eth_qos_irq[0]
319	mipi_isp_irq[31]
318	mipi_isp_irq[30]
317	mipi_isp_irq[29]
316	mipi_isp_irq[28]
315	mipi_isp_irq[27]
314	mipi_isp_irq[26]
313	mipi_isp_irq[25]
312	mipi_isp_irq[24]
311	mipi_isp_irq[23]
310	mipi_isp_irq[22]
309	mipi_isp_irq[21]
308	mipi_isp_irq[20]
307	mipi_isp_irq[19]
306	mipi_isp_irq[18]
305	mipi_isp_irq[17]
304	mipi_isp_irq[16]
303	mipi_isp_irq[15]
302	mipi_isp_irq[14]
301	mipi_isp_irq[13]
300	mipi_isp_irq[12]
299	mipi_isp_irq[11]
298	mipi_isp_irq[10]
297	mipi_isp_irq[9]
296	mipi_isp_irq[8]
295	mipi_isp_irq[7]
294	mipi_isp_irq[6]
293	mipi_isp_irq[5]
292	mipi_isp_irq[4]
291	mipi_isp_irq[3]
290	mipi_isp_irq[2]
289	mipi_isp_irq[1]
288	mipi_isp_irq[0]
287	1'b0
286	1'b0
285	1'b0

GIC Bit	Interrupt Source
284	ldim_done_int
283	venc1_vx1_int
282	venc0_vx1_int
281	usb_iddig_irq1
280	usb_vbusdig_irq1
279	a73_nIRQOUT[3]
278	a73_nIRQOUT[2]
277	a73_nIRQOUT[1]
276	a73_nIRQOUT[0]
275	a73_nFIQOUT[3]
274	a73_nFIQOUT[2]
273	a73_nFIQOUT[1]
272	a73_nFIQOUT[0]
271	1'b0
270	A73_ STANDBYWFIL2
269	A73_L2FLUSHDONE
268	A73IRQ[8]
267	A73IRQ[7]
266	A73IRQ[6]
265	A73IRQ[5]
264	A73IRQ[4]
263	A73IRQ[3]
262	A73IRQ[2]
261	A73IRQ[1]
260	A73IRQ[0]
259	A73_STANDBYWFI [3]
258	A73_STANDBYWFI [2]
257	A73_STANDBYWFI [1]
256	A73_STANDBYWFI [0]
255	assist_mbox_irq_ee [3]
254	assist_mbox_irq_ee [2]
253	assist_mbox_irq_ee [1]
252	assist_mbox_irq_ee [0]

GIC Bit	Interrupt Source
251	mbox_irq[3]
250	mbox_irq[2]
249	mbox_irq[1]
248	mbox_irq[0]
247	nIRQOUT[3:0][3]
246	nIRQOUT[3:0][2]
245	nIRQOUT[3:0][1]
244	nIRQOUT[3:0][0]
243	nFIQOUT[3:0][3]
242	nFIQOUT[3:0][2]
241	nFIQOUT[3:0][1]
240	nFIQOUT[3:0][0]
239	mbox_irq[4]
238	STANDBYWFIL2
237	L2FLUSHDONE
236	A53IRQ[8]
235	A53IRQ[7]
234	A53IRQ[6]
233	A53IRQ[5]
232	A53IRQ[4]
231	A53IRQ[3]
230	A53IRQ[2]
229	A53IRQ[1]
228	A53IRQ[0]
227	STANDBYWFI[3]
226	STANDBYWFI[2]
225	STANDBYWFI[1]
224	STANDBYWFI[0]
223	gdc_irq
222	edptx_int_1
221	edptx_int_0
220	vpu_sec_int
219	mute_irq
218	1'b0
217	ge2d_int
216	cusad_interrupt
215	rdma_done_int

Amlogic Proprietary and Confidential
Copyright © Amlogic. All rights reserved.

GIC Bit	Interrupt Source
214	vid1_wr_irq
213	vid0_wr_irq
212	vdin1_vsync_int
211	vdin1_hsync_int
210	vdin0_vsync_int
209	vdin0_hsync_int
208	viu1_mail_afbc_int[2]
207	lc_curve_int
206	vpu_crash_int
205	viu1_mail_afbc_int[1]
204	hdmitx_interrupt
203	deint_pre_irq
202	deint_post_irq
201	viff_empty_int_cpu
200	viu1_mail_afbc_int[0]
199	viu1_wm_int
198	viu1_dolby_int
197	viu1_vsync_int
196	viu1_hsync_int
195	viu1_line_n_int
194	viu2_vsync_int
193	viu2_hsync_int
192	viu2_line_n_int
191	spicc_5_int
190	spicc_4_int
189	spicc_3_int
188	anakin_irq[3]
187	anakin_irq[2]
186	anakin_irq[1]
185	anakin_irq[0]

GIC Bit	Interrupt Source
184	spicc_1_int
183	spicc_0_int
182	spi_int
181	sar_adc_irq
180	cecb_irq
179	ceca_irq
178	sd_emmc_C_irq
177	sd_emmc_B_irq
176	sd_emmc_A_irq
175	nand_irq
174	smartcard_irq
173	uart_f_irq
172	uart_e_irq
171	uart_d_irq
170	uart_c_irq
169	uart_b_irq
168	uart_a_irq
167	spicc_2_int
166	i2c_s_a_irq
165	i2c_m_f_irq
164	i2c_m_e_irq
163	i2c_m_d_irq
162	i2c_m_c_irq
161	i2c_m_b_irq
160	i2c_m_a_irq
159	dspb_error_irq[1]
158	dspb_error_irq[0]
157	dspa_error_irq[1]
156	dspa_error_irq[0]
155	ts_demux_irq

GIC Bit	Interrupt Source
154	mali_irq_pp3
153	mali_irq_ppmmu2
152	mali_irq_pp2
151	mali_irq_ppmmu1
150	mali_irq_pp1
149	mali_irq_ppmmu0
148	mali_irq_pp0
147	mali_irq_pmu
146	mali_irq_pp
145	mali_irq_gpmmu
144	mali_irq_gp
143	pcie_A_irq[7]
142	pcie_A_irq[6]
141	pcie_A_irq[5]
140	pcie_A_irq[4]
139	pcie_A_irq[3]
138	pcie_A_irq[2]
137	pcie_A_irq[1]
136	pcie_A_irq[0]
135	pcie_A_edma_int[1]
134	pcie_A_edma_int[0]
133	sectop_irq[1]
132	sectop_irq[0]
131	u2drd_interrupt
130	u3drd_interrupt
129	usb_iddig_irq0
128	usb_vbusdig_irq0

7.10.3 Register Description

Register Address

For below registers the base address is 0xfe00a000.

Each register final address = BASE + address * 4.

The following lists describe the mapping between each IRQ_CTRL register and its address.

Amlogic Proprietary and Confidential
Copyright © Amlogic. All rights reserved.

- IRQCTRL_IRQ_INV0 0xfe00a000
- IRQCTRL_IRQ_INV1 0xfe00a004
- IRQCTRL_IRQ_INV2 0xfe00a008
- IRQCTRL_IRQ_INV3 0xfe00a00c
- IRQCTRL_IRQ_INV4 0xfe00a010
- IRQCTRL_IRQ_INV5 0xfe00a014
- IRQCTRL_IRQ_INV6 0xfe00a018
- IRQCTRL_IRQ_INV7 0xfe00a01c
- IRQCTRL_IRQ_INV8 0xfe00a020
- IRQCTRL_IRQ_INV9 0xfe00a024
- IRQCTRL_IRQ_INV10 0xfe00a028
- IRQCTRL_MASK0_GIC 0xfe00a040
- IRQCTRL_MASK1_GIC 0xfe00a044
- IRQCTRL_MASK2_GIC 0xfe00a048
- IRQCTRL_MASK3_GIC 0xfe00a04c
- IRQCTRL_MASK4_GIC 0xfe00a050
- IRQCTRL_MASK5_GIC 0xfe00a054
- IRQCTRL_MASK6_GIC 0xfe00a058
- IRQCTRL_MASK7_GIC 0xfe00a05c
- IRQCTRL_MASK8_GIC 0xfe00a060
- IRQCTRL_MASK9_GIC 0xfe00a064
- IRQCTRL_MASK10_GIC 0xfe00a068
- IRQCTRL_MASK0_DSP 0xfe00a080
- IRQCTRL_MASK1_DSP 0xfe00a084
- IRQCTRL_MASK2_DSP 0xfe00a088
- IRQCTRL_MASK3_DSP 0xfe00a08c
- IRQCTRL_MASK4_DSP 0xfe00a090
- IRQCTRL_MASK5_DSP 0xfe00a094
- IRQCTRL_MASK6_DSP 0xfe00a098
- IRQCTRL_MASK7_DSP 0xfe00a09c
- IRQCTRL_MASK8_DSP 0xfe00a0a0
- IRQCTRL_MASK9_DSP 0xfe00a0a4
- IRQCTRL_MASK10_DSP 0xfe00a0a8
- IRQCTRL_MASK0_PWRCTRL 0xfe00a0c0
- IRQCTRL_MASK1_PWRCTRL 0xfe00a0c4
- IRQCTRL_MASK2_PWRCTRL 0xfe00a0c8
- IRQCTRL_MASK3_PWRCTRL 0xfe00a0cc
- IRQCTRL_MASK4_PWRCTRL 0xfe00a0d0
- IRQCTRL_MASK5_PWRCTRL 0xfe00a0d4
- IRQCTRL_MASK6_PWRCTRL 0xfe00a0d8
- IRQCTRL_MASK7_PWRCTRL 0xfe00a0dc
- IRQCTRL_MASK8_PWRCTRL 0xfe00a0e0
- IRQCTRL_MASK9_PWRCTRL 0xfe00a0e4
- IRQCTRL_MASK10_PWRCTRL 0xfe00a0e8

Amlogic Proprietary and Confidential
Copyright © Amlogic. All rights reserved.

- IRQCTRL_MASK0_AOCPU 0xfe00a100
- IRQCTRL_MASK1_AOCPU 0xfe00a104
- IRQCTRL_MASK2_AOCPU 0xfe00a108
- IRQCTRL_MASK3_AOCPU 0xfe00a10c
- IRQCTRL_MASK4_AOCPU 0xfe00a110
- IRQCTRL_MASK5_AOCPU 0xfe00a114
- IRQCTRL_MASK6_AOCPU 0xfe00a118
- IRQCTRL_MASK7_AOCPU 0xfe00a11c
- IRQCTRL_MASK8_AOCPU 0xfe00a120
- IRQCTRL_MASK9_AOCPU 0xfe00a124
- IRQCTRL_MASK10_AOCPU 0xfe00a128
- IRQCTRL_IRQ_MODE0 0xfe00a140
- IRQCTRL_IRQ_MODE1 0xfe00a144
- IRQCTRL_IRQ_MODE2 0xfe00a148
- IRQCTRL_IRQ_MODE3 0xfe00a14c
- IRQCTRL_IRQ_MODE4 0xfe00a150
- IRQCTRL_IRQ_MODE5 0xfe00a154
- IRQCTRL_IRQ_MODE6 0xfe00a158
- IRQCTRL_IRQ_MODE7 0xfe00a15c
- IRQCTRL_IRQ_MODE8 0xfe00a160
- IRQCTRL_IRQ_MODE9 0xfe00a164
- IRQCTRL_IRQ_MODE10 0xfe00a168
- IRQCTRL_IRQ_LATCH0 0xfe00a180
- IRQCTRL_IRQ_LATCH1 0xfe00a184
- IRQCTRL_IRQ_LATCH2 0xfe00a188
- IRQCTRL_IRQ_LATCH3 0xfe00a18c
- IRQCTRL_IRQ_LATCH4 0xfe00a190
- IRQCTRL_IRQ_LATCH5 0xfe00a194
- IRQCTRL_IRQ_LATCH6 0xfe00a198
- IRQCTRL_IRQ_LATCH7 0xfe00a19c
- IRQCTRL_IRQ_LATCH8 0xfe00a1a0
- IRQCTRL_IRQ_LATCH9 0xfe00a1a4
- IRQCTRL_IRQ_LATCH10 0xfe00a1a8
- IRQCTRL_IRQ_LATCH_CLR0 0xfe00a1c0
- IRQCTRL_IRQ_LATCH_CLR1 0xfe00a1c4
- IRQCTRL_IRQ_LATCH_CLR2 0xfe00a1c8
- IRQCTRL_IRQ_LATCH_CLR3 0xfe00a1cc
- IRQCTRL_IRQ_LATCH_CLR4 0xfe00a1d0
- IRQCTRL_IRQ_LATCH_CLR5 0xfe00a1d4
- IRQCTRL_IRQ_LATCH_CLR6 0xfe00a1d8
- IRQCTRL_IRQ_LATCH_CLR7 0xfe00a1dc
- IRQCTRL_IRQ_LATCH_CLR8 0xfe00a1e0
- IRQCTRL_IRQ_LATCH_CLR9 0xfe00a1e4
- IRQCTRL_IRQ_LATCH_CLR10 0xfe00a1e8

Amlogic Proprietary and Confidential
Copyright © Amlogic. All rights reserved.

- IRQCTRL_LOCK_BIT 0xfe00a200
- IRQCTRL_PROT_BIT 0xfe00a204
- IRQCTRL_SOFT_IRQ 0xfe00a220

Register Description

Table 7-361 RQCTRL_IRQ_INV0~10

Bits	R/W	Defaults	Description
351:0	R/W	0	if set 1, will invert irq level

Table 7-362 IRQCTRL_IRQ_MODE0~10

Bits	R/W	Defaults	Description
351:0	R/W	0	if set 1, will select latched irq; if set 0, will select original irq source;

Table 7-363 IRQCTRL_IRQ_LATCH0~10

Bits	R/W	Defaults	Description
351:0	R	0	the latched irq value

Table 7-364 IRQCTRL_IRQ_LATCH_CLR0~10

Bits	R/W	Defaults	Description
351:0	R/W	0	if set 1, will keep latched irq to low

Table 7-365 IRQCTRL_IRQ_MASK0~10_*

Bits	R/W	Defaults	Description
351:0	R/W	all 1	if set 0, will keep irq as low

Table 7-366 IRQCTRL_LOCK_BIT

Bits	R/W	Defaults	Description
6	R/W	0	write 1 once, if set 1 ,will lock all IRQ_MODE
4	R/W	0	write 1 once, if set 1 ,will lock all IRQ_MASK_AOCPU
3	R/W	0	write 1 once, if set 1 ,will lock all IRQ_MASK_PWRCTRL
2	R/W	0	write 1 once, if set 1 ,will lock all IRQ_MASK_DSP
1	R/W	0	write 1 once, if set 1 ,will lock all IRQ_MASK_GIC
0	R/W	0	write 1 once, if set 1 ,will lock all IRQ_INV

Amlogic Proprietary and Confidential
Copyright © Amlogic. All rights reserved.

Table 7-367 IRQCTRL_PROT_BIT

Bits	R/W	Defaults	Description
6	R/W	0	if set 1 ,will lock all IRQ_MODE
4	R/W	0	if set 1 ,will lock all IRQ_MASK_AOCPU
3	R/W	0	if set 1 ,will lock all IRQ_MASK_PWRCTRL
2	R/W	0	if set 1 ,will lock all IRQ_MASK_DSP
1	R/W	0	if set 1 ,will lock all IRQ_MASK_GIC
0	R/W	0	if set 1 ,will lock all IRQ_INV

7.11 Timer

7.11.1 Overview

The SOC contains 15 general purpose timers.

7.11.2 General-Purpose Timer

The SOC contains a number of general-purpose timers that can be used as general counters or interrupt generators. Each counter (except TIMER E) can be configured as a periodic counter (for generating periodic interrupts) or a simple count-down and stop counter. Additionally, the timers have a programmable count rate ranging from 1uS to 1mS. The table below outlines the general-purpose timers available in the chip.

Timer	Timebase Options	Counter size	Comment
Timer A	1uS, 10uS, 100uS	16-bits	The 16-bit counter allows the timer to generate interrupts as infrequent as every 65.535 Seconds
Timer B	1uS, 10uS, 100uS	16-bits	
Timer C	1uS, 10uS, 100uS	16-bits	
Timer D	1uS, 10uS, 100uS	16-bits	
Timer E	1uS, 10uS, 100uS	64-bits	Doesn't generate an interrupt. This is a count up counter that counts from 0 to 0xFFFFFFFF. The counter can be written at any time to reset the value to 0.
Timer F	1uS, 10uS, 100uS	16-bits	
Timer G	1uS, 10uS, 100uS	16-bits	
Timer H	1uS, 10uS, 100uS	16-bits	
Timer I	1uS, 10uS, 100uS	16-bits	
Timer J	1uS, 10uS, 100uS	16-bits	

7.11.3 Watchdog Timer

There are also two watchdog timers, one in AO and the other in EE domain, illustrated as following:

Amlogic Proprietary and Confidential
Copyright © Amlogic. All rights reserved.

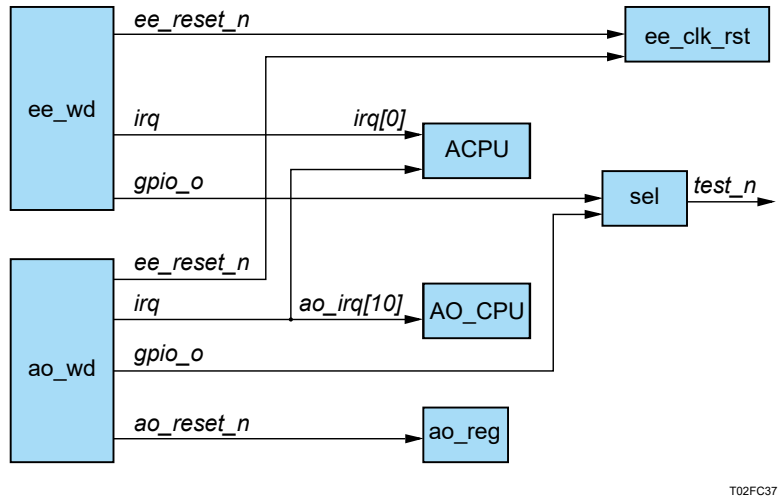

Figure 7-28 EE domain Watchdog Timer Degisn

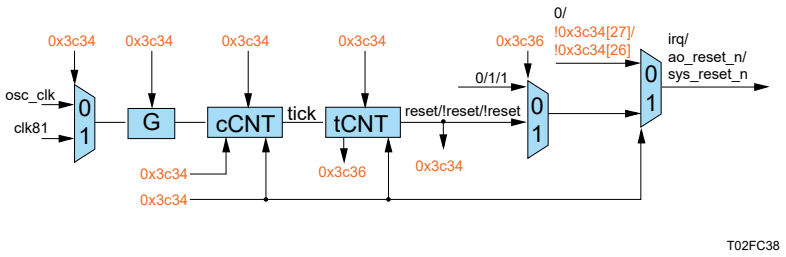

The AO Domain watchdog timer is driven from the system clock (typically 157Mhz). It is a 16-bit counter that is periodically reset by either the AO CPU or the System CPU. This AO-watchdog timer can be used to generate an interrupt of the AO domain. Additionally, the AO-watchdog timer can be used to “enable” a delay generator that can toggle a GPIO pin (currently the TEST_n I/O pad). The “delay generator” allows an interrupt to first be acknowledged by the AO-CPU before the TEST_N pad is toggled. The “delay generator” is programmable from 1 to 65535 system clocks (typically 417uS).

It should be noted that the AO watchdog timer can also be used to reset the AO domain but this feature is only used when operating in a suspend mode (only the AO-domain is powered). As long as the system periodically resets the AO-watchdog timer the WD_GPIO_CNT (delay generator) will not be enabled and the I/O pad will not toggle.

Note

The maximum delay between two AO-watchdog periodic resets is about 100mS (assuming a 157Mhz system clock).

The EE Domain watchdog timer is driven by the 24Mhz crystal clock and can be used to generate an interrupt to the system CPU or optionally, the watchdog timer can completely reset the chip (causing a cold boot). There are a few registers that are not affected by watchdog timer. These registers are only reset by the external RESET_n I/O pad and can be used to store information related to a possible watchdog event. Aslong as the system CPU periodically resets the EE-watchdog timer, it will never timeout and cause an interrupt or system reset.

Amlogic Proprietary and Confidential
Copyright © Amlogic. All rights reserved.

Note

The maximum delay between two EE-watchdog periodic resets is about 8.3 Seconds. This time is independent of thesystem clocks and is driven by the external 24Mhz crystal.

7.11.4 Register Description

Each register final address = 0xfe010000 + address * 4

The following lists describe the mapping between each timer register and its address.

SYSCTRL_TIMERA_CTRL 0xfe0100c0

SYSCTRL_TIMERA 0xfe0100c4

SYSCTRL_TIMERB_CTRL 0xfe0100c8

SYSCTRL_TIMERB 0xfe0100cc

SYSCTRL_TIMERC_CTRL 0xfe0100d0

SYSCTRL_TIMERC 0xfe0100d4

SYSCTRL_TIMERD_CTRL 0xfe0100d8

SYSCTRL_TIMERD 0xfe0100dc

SYSCTRL_SEC_TIMERA_CTRL 0xfe0100e0

SYSCTRL_SEC_TIMERA 0xfe0100e4

SYSCTRL_TIMERE_CTRL 0xfe0100e8

SYSCTRL_TIMERE 0xfe0100ec

SYSCTRL_TIMERE_HI 0xfe0100f0

SYSCTRL_TIMERF_CTRL 0xfe0100f4

SYSCTRL_TIMERF 0xfe0100f8

SYSCTRL_TIMERF_HI 0xfe0100fc

SYSCTRL_TIMERG_CTRL 0xfe010100

SYSCTRL_TIMERG 0xfe010104

SYSCTRL_TIMERH_CTRL 0xfe010108

SYSCTRL_TIMERH 0xfe01010c

SYSCTRL_TIMERI_CTRL 0xfe010110

SYSCTRL_TIMERI 0xfe010114

SYSCTRL_TIMERJ_CTRL 0xfe010118

SYSCTRL_TIMERJ 0xfe01011c

SYSCTRL_SEC_TIMERE_CTRL 0xfe010120

SYSCTRL_SEC_TIMERE 0xfe010124

SYSCTRL_SEC_TIMERE_HI 0xfe010128

SYSCTRL_TIMER90K 0xfe01015c

SYSCTRL_HPG_TIMER 0xfe010164

Amlogic Proprietary and Confidential
Copyright © Amlogic. All rights reserved.

Table 7-368 SYSCTRL_TIMERA/B/C/D/G/H/I/J_CTRL

Bit(s)	R/W	Default	Description
7	R/W	1	timer en
6	R/W	1	timer mode: 0: generate irq once; 1: generate irq periodic;
1:0	R/W	0	clk_sel: 0: cts_sys_clk; 1:1us; 2:10us; 3:100us

Table 7-369 SYSCTRL_TIMERA/B/C/D/G/H/I/J

Bit(s)	R/W	Default	Description
31:16	R	0	ttimer threshold
15:0	R/W	0	write: clean timer count; set timer threshold. irq will generate when timer count equal to threshold read: timer count value

Table 7-370 SYSCTRL_SEC_TIMERA_CTRL

Bit(s)	R/W	Default	Description
7	R/W	1	timer en
6	R/W	1	timer mode: 0: generate irq once; 1: generate irq periodic;
1:0	R/W	0	clk_sel: 0: cts_sys_clk; 1:1us; 2:10us; 3:100us

Table 7-371 SYSCTRL_SEC_TIMERA

Bit(s)	R/W	Default	Description
31:16	R	0	timer threshold
15:0	R/W	0	write: clean timer count; set timer threshold. irq will generate when timer count equal to threshold read: timer count value

Amlogic Proprietary and Confidential
Copyright © Amlogic. All rights reserved.

Table 7-372 SYSCTRL_TIMERE/F_CTRL

Bit(s)	R/W	Default	Description
7	R/W	1	timer en
1:0	R/W	1	clk_sel: 0: cts_sys_clk; 1:1us; 2:10us; 3:100us

Table 7-373 SYSCTRL_TIMERE/F

Bit(s)	R/W	Default	Description
31:0	R/W	0	write: clean timer count; read: update timer count[63:32] to TIMER_HI timer count[31:0]

Table 7-374 SYSCTRL_TIMERE/F_HI

Bit(s)	R/W	Default	Description
31:0	R	0	timer count[63:32]

Table 7-375 SYSCTRL_SEC_TIMERE_CTRL

Bit(s)	R/W	Default	Description
7	R/W	1	timer en
1:0	R/W	1	clk_sel: 0: cts_sys_clk; 1:1us; 2:10us; 3:100us

Table 7-376 SYSCTRL_SEC_TIMERE

Bit(s)	R/W	Default	Description
31:0	R/W	0	write: clean timer count; read: update timer count[63:32] to TIMER_HI timer count[31:0]

Table 7-377 SYSCTRL_SEC_TIMERE_HI

Bit(s)	R/W	Default	Description
31:0	R	0	timer count[63:32]

Amlogic Proprietary and Confidential
Copyright © Amlogic. All rights reserved.

Table 7-378 SYSCTRL_TIMER90K

Bit(s)	R/W	Default	Description
15:0	R/W	0x384	90khz timer divider

Table 7-379 SYSCTRL_HPG_TIMER

Bit(s)	R/W	Default	Description
15:0	R/W	0x0	generate h2tmr_irq if timer_cnt equal to HPG_TIMER; the timer_cnt will increment by 90khz timer; the timer_cnt will clear when generated h2tmr_irq;

7.12 Crypto

7.12.1 Overview

The crypto engine is one encrypt/decrypt function accelerator. Crypto engine supports 2 different modes, i.e. SCP (System Control Processor) secure and SCP non secure. The crypto engine has special internal DMA controller to transfer data.

It has the following features.

- Trustzone based Trusted Execution Environment (TEE)
- Secured boot, encrypted OTP, encrypted DRAM with memory integrity checker, hardware key ladder and internal control buses and storage
- Separated secure/non-secure Entropy true RNG
- Pre-region/ID memory security control and electric fence
- Hardware based Trusted Video Path (TVP) , video watermarking and secured contents (needs SecureOS software)
- Secured IO and secured clock

7.12.2 Key Ladder

The Key Ladder is a series of TDES / AES crypto processes that iterates on different user supplied and OTP keys. The key ladder module uses a single AES / TDES crypto module and iterates by using internal storage to hold temporary states.

The key ladder flow figure is shown below.

Amlogic Proprietary and Confidential
Copyright © Amlogic. All rights reserved.

Figure 7-29 Key Ladder Flow

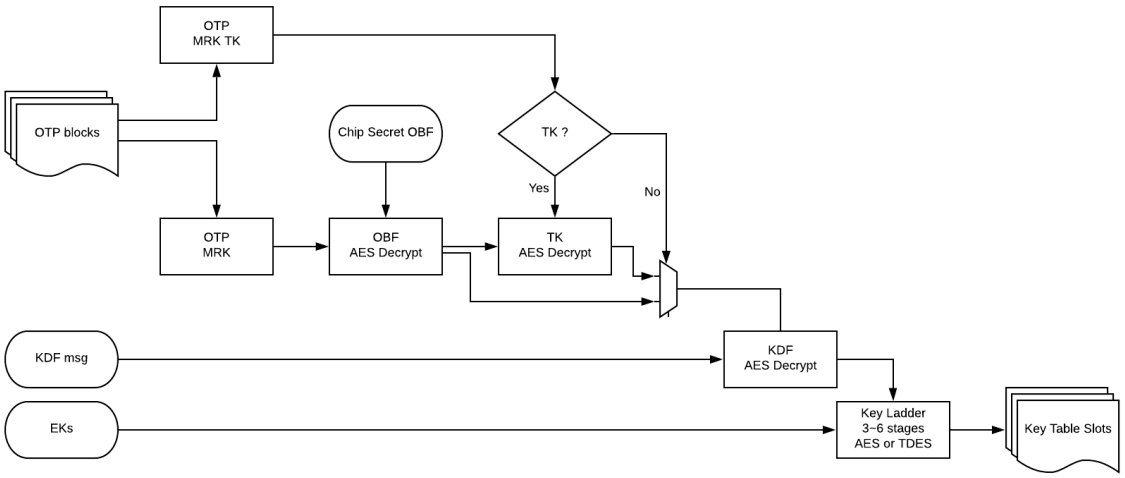

The key ladder supports MKL and ETSI modes.

7.12.3 RNG

Functionality the Random Number Generator (RNG) contains two main modules, True Random Number Generator (TRNG) and Deterministic Random Number Generator (DRNG).

- True Random Number Generator (TRNG): is realized by using metastability and jitter for random bit generation based on four free running ring oscillator
- Deterministic Random Number Generator (DRNG): which has 32-bit random number generator, is mainly designed to increase the throughput and do post-processing of the Digital TRNG, which will need hundreds cycles to collect entropy.

7.12.4 CTR_DRBG

CTR_DRBG contains two main modules, True Random Number Generator (TRNG) and Deterministic Random Number Generator (DRNG).

- True Random Number Generator (TRNG): is realized by using metastability and jitter for random bit generation based on four free running ring oscillator
- Deterministic Random Number Generator (DRNG): which has 32-bit random number generator, is mainly designed to increase the throughput and do post-processing of the Digital TRNG, which will need hundreds cycles to collect entropy.

It supports health test, which contains two functions: repetition count test and adaptive proportion test.

7.12.5 EFUSE

Synopsys Design Ware OTP NVM IP, Previous Kilopass OTP, is selected as OTP IP for this project.

TSMC 12FFC 1.8V 32Kbits

Model: XPM KPTS12FFC32-R08W01

Program x1 bit

Read x8 bits

Internal charge pump, support field programming

Amlogic Proprietary and Confidential
Copyright © Amlogic. All rights reserved.

32 Kbits OTP is divided into 256 blocks, each block has 128 bits.

The blocks are labeled from 0 to 255.

The bits in each block are labeled from 0 to 127.

OTP controller takes job from users, there are 4 types of tasks.

- Sandwich Read
- Check
- Write
- Test

7.13 MIPI_ISP TOP

T7 mipi_isp main features:

1. support input data format

   raw6/7/8/10/12/14/RGB888/RGB666/RGB565/RGB555/RGB444/YUV422-8BIT/YUV422-10BIT
2. support max frame size 4608x3456
3. support max speed with 1.5Gbps/lane
4. support max 4 sensors input same time
5. support SDR and max 2-exp HDR with virtual channel or line-info mode
6. with compress/decompress work on adapt
7. with APB DMA for top register set

7.13.1 MIPI_CSI_DPHY

The SoC has 4 DPHYs: dphy0/1 and dphy2/3 as two groups.

- Each DPHY can support up to 4 data lane and 1 clock lane.
- Max can support 1.5Gbps/lane.

7.13.2 MIPI_ISP_ADAPT

MIPI_ISP_ADAPT is used to change IDI interface to pixel format to meet isp_core input requirements, which is:

data valid bit high order effective,must alignment input with different channel, HBLANK > 64 cycles, VBLANK > 40lines

Figure 7-30 ISP Core Input Requirement

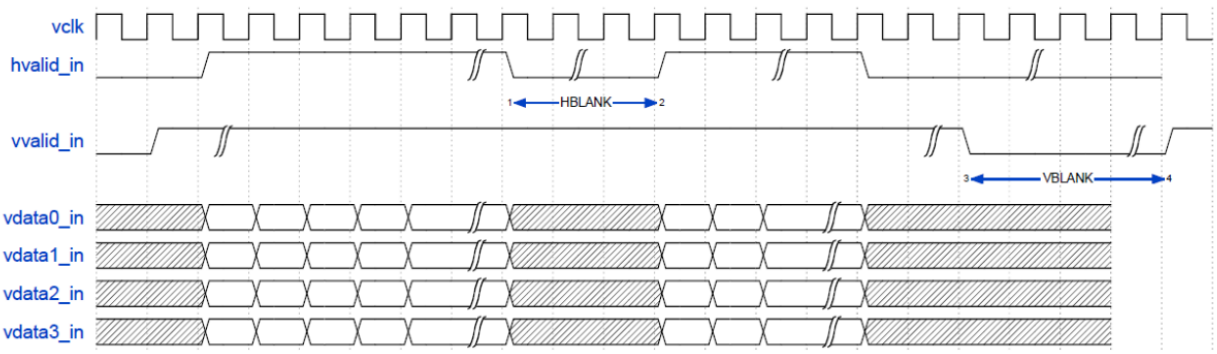

mipi_isp_adapt supports 4 work modes for RAW input.

Amlogic Proprietary and Confidential
Copyright © Amlogic. All rights reserved.

- SDR with ddr path mode
- SDR with direct path mode
- HDR with ddr path+direct path mode
- HDR with ddr path+ddr path mode

And supports 2 work modes for YUV/RGB input:

- SDR with ddr path mode
- SDR with direct path mode(comb direct path)

mipi_adapt_frontend0/1/2/3

Change IDI data to pixel format, write to ddr to direct path.

- Support virtual channel mode or line info mode for HDR RAW input
- Support pixel/line crop for RAW input, only line crop for RGB/YUV input(pixel crop done in mipi_adapt_pixel module)

Data Type	RAW Data Arrangement in DDR
RAW6	{P15,2'h0,P14,2'h0...P3,2'h0,P2,2'h0,P1,2'h0,P0,2'h0}
RAW7	{P15,1'h0,P14,1'h0...P3,1'h0,P2,1'h0,P1,1'h0,P0,1'h0}
RAW8	{P15,P14...P3,P2,P1,P0}
RAW10	{ P12[9:2],P11[1:0],P10[1:0],P9[1:0],P8[1:0],P11[9:2],P10[9:2],P9[9:2],P8[9:2] ...P3[1:0],P2[1:0],P1[1:0],P0[1:0],P3[9:2],P2[9:2],P1[9:2],P0[9:2]}
RAW12	{P10[11:4],P9[3:0],P8[3:0],P9[11:4],P8[11:4]...P1[3:0],P0[3:0],P1[11:4],P0[11:4]}
RAW14	{P3[5:0],2'h0,P3[13:6],P2[5:0],2'h0,P2[13:6],P2[5:0],2'h0,P1[13:6],P0[5:0],2'h0,P0[13:6]}

mipi_adapt_ddrrd0/1

This module reads data which is written by frontend, or accept direct path/direct comb path data from frontend.

It also writes to line buf.

mipi_adapt_pixel0/1

This module change data in line buf to pixel format.

For YUV/RGB format, it can do pixel crop in this module.

For YUV422, it can convert YUV422 to YUV444.

mipi_adapt_alig

The module is used to generate the frame structure required by the ISP and to align pixel data of the two field exposures in HDR mode.

mipi_fe_mux

The module is used to mux single from frontend0~3 to ddr_rd.

It can add delay for each frame_vs single, and monitor delay from frame_vs to 1st valid data.

7.13.3 ISP_APB_DMA

ISP_APB_DMA used to set apb bus registers,there are 16 trigger source (select from 32 source) for APB_DMA.

Amlogic Proprietary and Confidential
Copyright © Amlogic. All rights reserved.

Each trigger can trig 2 tasks, each task can either write or read.

APB CMD store in DDR in such format:

- WR CMD: 32bit waddr + 32bit wdata, dword-aligned
- RD CMD: 32bit raddr + 32bit raddr, word-aligned

And each trigger source have pingpong task setting.

When DMA work, the CPU can normally access apb registers.

Figure 7-31 ISP_APB_DMA Diagram

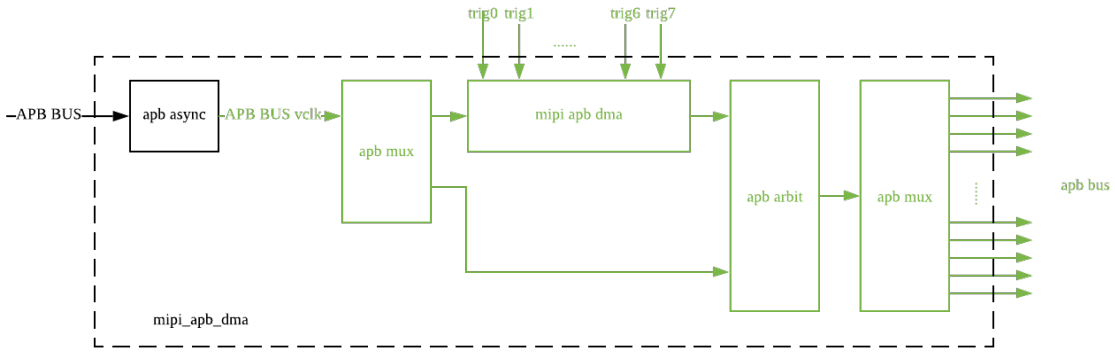

32 APB trigger source list:

Source Index	Trigger Source	Source Index	Trigger Source
31	Mipi_adapt_irq[48]	15	Mipi_adapt_irq[29]
30	Mipi_adapt_irq[47]	14	Mipi_adapt_irq[28]
29	Mipi_adapt_irq[45]	13	Mipi_adapt_irq[27]
28	Mipi_adapt_irq[44]	12	Mipi_adapt_irq[26]
27	Mipi_adapt_irq[42]	11	Mipi_adapt_irq[9]
26	Mipi_adapt_irq[41]	10	Mipi_adapt_irq[8]
25	Mipi_adapt_irq[39]	9	adapt_de_wr_path_end
24	Mipi_adapt_irq[38]	8	adapt_de_rd_path_end
23	Mipi_adapt_irq[37]	7	Isp_core_apb_dma_start [7]
22	Mipi_adapt_irq[36]	6	Isp_core_apb_dma_start [6]
21	Mipi_adapt_irq[35]	5	Isp_core_apb_dma_start [5]
20	Mipi_adapt_irq[34]	4	Isp_core_apb_dma_start [4]
19	Mipi_adapt_irq[33]	3	Isp_core_apb_dma_start [3]
18	Mipi_adapt_irq[32]	2	Isp_core_apb_dma_start [2]

Amlogic Proprietary and Confidential
Copyright © Amlogic. All rights reserved.

Source Index	Trigger Source	Source Index	Trigger Source
17	Mipi_adapt_irq[31]	1	Isp_core_apb_dma_start [1]
16	Mipi_adapt_irq[30]	0	Isp_core_apb_dma_start [0]

7.13.4 Register Description

7.13.4.1 MIPI ISP Registers

Each register final address = module base address+ address * 4

module	base address
mipi_isp_adapt_frontend0	32’hfe3b0000
mipi_isp_adapt_frontend1	32’hfe3b0400
mipi_isp_adapt_frontend2	32’hfe3b0800
mipi_isp_adapt_frontend3	32’hfe3b0c00
mipi_isp_adapt_cfg	32’hfe3b1000
mipi_isp_top	32’hfe3b3000
mipi_isp_axi_arbit0	32’hfe3b3800
mipi_isp_axi_adapt_de	32’hfe3b1400
mipi_isp_apb_dma	32’hfe3b1c00
mipi_isp_host3	32’hfe3be000
mipi_isp_host2	32’hfe3be400
mipi_isp_host1	32’hfe3be800
mipi_isp_host0	32’hfe3bec00
mipi_isp_dphy3	32’hfe3bf000
mipi_isp_dphy2	32’hfe3bf400
mipi_isp_dphy1	32’hfe3bf800
mipi_isp_dphy0	32’hfe3bfc00

MIPI_ISP_PHY

Table 7-380 reg_csi_phy_cntl0 0X0

Bit	R/W	Default	Description
<31:30>		2'b0	reserved
<29>		1'b1	lane 5 hs digital logic path enable
<28>		1'b1	lane 4 hs digital logic path enable
<27>		1'b1	lane 3 hs digital logic path enable

Amlogic Proprietary and Confidential
Copyright © Amlogic. All rights reserved.

Bit	R/W	Default	Description
<26>		1'b1	lane 2 hs digital logic path enable
<25>		1'b1	lane 1 hs digital logic path enable
<24>		1'b1	lane 0 hs digital logic path enable
<23:20>		4'b0100	lp high-vth control(one hot)
<19:16>		4'b0010	lp low-vth control(one hot)
<15>		1'b0	reserved
<14:11>		4'b1011	hs mode rx termination trimming control
<10>		1'b1	hs/lp bias current enable control
<9>		1'b1	hs eq cml resitor control(2.5G:1; 1.5G:0)
<8>		1'b1	hs d2d cml resitor control(2.5G:1; 1.5G:0)
<7:6>		2'b10	hs RX receiver eq bias current control(2.5G:10; 1.5G:00)
<5:4>		2'b10	hs RX receiver d2d bias current control(2.5G:10; 1.5G:00)
<3:2>		2'b10	hs RX receiver d2s bias current control(2.5G:10; 1.5G:00)
<1:0>		2'b0	lp RX receiver bias current control

Table 7-381 reg_csi_phy_cntl1 0X1

Bit	R/W	Default	Description
<31:30>		2'b0	reserved
<29>		1'b0	hs hsd3_r/f use clock hsout5_ck(1'b1) or hsout2_ck(1'b0)
<28>		1'b0	hs hsd2_r/f use clock hsout5_ck(1'b1) or hsout2_ck(1'b0)
<27>		1'b0	hs hsd1_r/f use clock hsout5_ck(1'b1) or hsout2_ck(1'b0)
<26>		1'b0	hs hsd0_r/f use clock hsout5_ck(1'b1) or hsout2_ck(1'b0)
<25>		1'b1	hs sync block enable control
<24>		1'b1	common bg enable
<23>		1'b0	data channel eq enable
<22>		1'b0	clock channel eq enable
<21>		1'b1	data channel eq max gain
<20>		1'b1	clock channel eq max gain
<19:18>		2'b10	hs eq res select, min:11; medium:10; max:01
<17:16>		2'b10	hs eq cap select, small:10 ; big:11
<15:6>		10'b0	reserved
<5:0>		6'b0	lane5 to lane1 P N pins swap(default:0; P N swap:1)

Amlogic Proprietary and Confidential
Copyright © Amlogic. All rights reserved.

Table 7-382 reg_csi_phy_cntl2 0X2

Bit	R/W	Default	Description
<31>		1'b0	reg_csi2_pt_en : production test
<26>		1'b0	reg_skew_from_dphy, 1'b1□skew from dphy, 1'b0:from fixed register
<25>		1'b0	reg_lane5_sel_dphy, lane5 MUX to 1'b1:DPHY1,1'b0:DPHY0
<24>		1'b0	reg_lane4_sel_dphy, lane4 MUX to 1'b1:DPHY1,1'b0:DPHY0
<23>		1'b0	reg_lane3_sel_dphy, lane3 MUX to 1'b1:DPHY1,1'b0:DPHY0
<22>		1'b0	reg_lane2_sel_dphy, lane2 MUX to 1'b1:DPHY1,1'b0:DPHY0
<21>		1'b0	reg_lane1_sel_dphy, lane1 MUX to 1'b1:DPHY1,1'b0:DPHY0
<20>		1'b0	reg_lane0_sel_dphy: lane0 MUX to 1'b1:DPHY1,1'b0:DPHY0
<19:0>		20'b0	reg_csi2_pt_ctrl

Table 7-383 reg_csi_phy_cntl3 0X3

Bit	R/W	Default	Description
<29:25>		4'b0	reg_lane0_skew, lane0 fixed skew value
<24:20>		4'b0	reg_lane0_skew, lane0 fixed skew value
<19:15>		4'b0	reg_lane0_skew, lane0 fixed skew value
<14:10>		4'b0	reg_lane0_skew, lane0 fixed skew value
<9:5>		4'b0	reg_lane0_skew, lane0 fixed skew value
<4:0>		4'b0	reg_lane0_skew, lane0 fixed skew value

reg_csi_phy_cntl4 0x4 for analog phy 1, description same as reg_phy_cnt0

reg_csi_phy_cntl5 0x5 for analog phy 1, description same as reg_phy_cnt1

reg_csi_phy_cntl6 0x6 for analog phy 1, description same as reg_phy_cnt2

reg_csi_phy_cntl7 0x7 for analog phy 1, description same as reg_phy_cnt3

MIPI_ISP_ADAPT

Table 7-384 MIPI_ISP_ADAPT Register Address

Addr	Name	RW	Function
0x00	CSI2_CLK_RESET	RW	Clock and reset control.
0x01	CSI2_GEN_CTRL0	RW	General control.
0x02	CSI2_GEN_CTRL1	RW	General control.
0x03	CSI2_X_START_END_ISP	RW	Direct path X start/end.
0x04	CSI2_Y_START_END_ISP	RW	Direct path Y start/end.
0x05	CSI2_X_START_END_MEM	RW	MEM path X start/end.
0x06	CSI2_Y_START_END_MEM	RW	MEM path Y start/end.
0x07	CSI2_VC_MODE	RW	Use virtual channel to separate direct and MEM path.

Amlogic Proprietary and Confidential
Copyright © Amlogic. All rights reserved.

Addr	Name	RW	Function
0x08	CSI2_VC_MODE2_MATCH_MASK_A_L	RW	To separate direct and MEM path.
0x09	CSI2_VC_MODE2_MATCH_MASK_A_H	RW	To separate direct and MEM path.
0x0a	CSI2_VC_MODE2_MATCH_A_L	RW	To separate direct and MEM path.
0x0b	CSI2_VC_MODE2_MATCH_A_H	RW	To separate direct and MEM path.
0x0c	CSI2_VC_MODE2_MATCH_B_L	RW	To separate direct and MEM path.
0x0d	CSI2_VC_MODE2_MATCH_B_H	RW	To separate direct and MEM path.
0x0e	CSI2_DDR_START_PIX	RW	DDR start address for pixel-based data.
0x0f	CSI2_DDR_START_PIX_ALT	RW	Alternative DDR start address for pixel-based data. Ping-pong mode.
0x10	CSI2_DDR_STRIDE_PIX	RW	DDR line stride for pixel-based data.
0x11	CSI2_DDR_START_OTHER	RW	DDR start address for non-pixel-based data.
0x12	CSI2_DDR_START_OTHER_ALT	RW	Alternative DDR start address for non-pixel-based data. Ping-pong mode.
0x13	CSI2_DDR_MAX_BYTES_OTHER	RW	For DDR store non-pixel-based.
0x14	CSI2_INTERRUPT_CTRL_STAT	RW	Interrupt control/status.
0x15	CSI2_VC_MODE2_MATCH_MASK_B_L	RW	To separate direct and MEM path.
0x16	CSI2_VC_MODE2_MATCH_MASK_B_H	RW	To separate direct and MEM path.
0x17	CSI2_DDR_LOOP_LINES_PIX	RW	DDR loopback for pixel-based.
0x20	CSI2_GEN_STAT0	R	General status.
0x21	CSI2_ERR_STAT0	RW	Error status.
0x22	CSI2_PIC_SIZE_STAT	R	Picture size seen at direct path.
0x23	CSI2_DDR_WPTR_STAT_PIX	R	Current DDR address for pixel-based.
0x24	CSI2_DDR_WPTR_STAT_OTHER	R	Current DDR address for non-pixel-based.
0x25	CSI2_STAT_MEM_0	R	Status for MEM path.
0x26	CSI2_STAT_MEM_1	R	Status for MEM path.
0x27	CSI2_STAT_MEM_2	R	Status for MEM path.
0x28	CSI2_STAT_GEN_SHORT_08	R	Generic short packet 0x08.
0x29	CSI2_STAT_GEN_SHORT_09	R	Generic short packet 0x09.
0x2a	CSI2_STAT_GEN_SHORT_0A	R	Generic short packet 0x0A.
0x2b	CSI2_STAT_GEN_SHORT_0B	R	Generic short packet 0x0B.
0x2c	CSI2_STAT_GEN_SHORT_0C	R	Generic short packet 0x0C.

Amlogic Proprietary and Confidential
Copyright © Amlogic. All rights reserved.

Addr	Name	RW	Function
0x2d	CSI2_STAT_GEN_SHORT_0D	R	Generic short packet 0x0D.
0x2e	CSI2_STAT_GEN_SHORT_0E	R	Generic short packet 0x0E.
0x2f	CSI2_STAT_GEN_SHORT_0F	R	Generic short packet 0x0F.
0x30	CSI2_STAT_TYPE_RCVD_L	RW	Record received packet types.
0x31	CSI2_STAT_TYPE_RCVD_H	RW	Record received packet types.
0x32	CSI2_DDR_START_PIX_B	RW	DDR start address for pixel-based data (isp2ddr).
0x33	CSI2_DDR_START_PIX_B_ ALT	RW	Alternative DDR start address for pixel-based data. Ping-pong mode (isp2ddr).
0x34	CSI2_DDR_STRIDE_PIX_B	RW	DDR line stride for pixel-based data (isp2ddr).
0x35	CSI2_DDR_WPTR_STAT_ PIX_B	R	Current DDR address for pixel-based (isp2ddr).
0x36	CSI2_STAT_MEM_3	R	Status for MEM path.
0x37	CSI2_AXI_UGT_CNTL0	RW	AXI bus urgent control
0x38	CSI2_AXI_UGT_CNTL1	RW	AXI bus urgent control
0x3a	CSI2_AXI_UGT_ST	R	AXI bus urgent status
0x3b	CSI2_LINE_SUP_CNTL0	RW	add data to mem path meet min data number
0x3c	CSI2_LINE_SUP_ST	R	Status for mem path data add

Table 7-385 CSI2_CLK_RESET

Bit	R/W	Default	Description
31:3	R	0	Reserved
2	RW	0	clk_auto_gate_off: Enable/disable clock gating. 0=Enable auto clock gating for power saving; 1=Disable auto clock gating.
1	RW	0	clk_enable: To enable/disable clock to mipi_csi_adapt_frontend module. 0=Disable clock; 1=Enable clock.
0	RW	1	sw_reset: To reset mipi_csi_adapt_frontend module. 0=Release from reset; 1=Apply reset.

Table 7-386 CSI2_GEN_CTRL0

Bit	R/W	Default	Description
31:21	R	0	Reserved
29	RW	0	awfifo_cnt_check. 0=original behaviour,mem2ddr/isp2ddr_done generate don’t check awfifo empty 1=mem2ddr/isp2ddr_done generate need until awfifo empty
26	RW	0	isp2comb_enable. 0=Original behaviour, direct-path data go to downstream module; 1=Enable direct-path data go to comb path(RGB/YUV direct path) instead, not go to downstream module.
25	RW	0	isp2ddr_enable.

Amlogic Proprietary and Confidential
Copyright © Amlogic. All rights reserved.

Bit	R/W	Default	Description
			0=Original behaviour, direct-path data go to downstream module; 1=Enable direct-path data go to memory instead, not go to downstream module. Memory location is defined by CSI2_DDR_START_PIX_B/_ALT.
24	RW	0	rst_on_vs_disable. 0=Reset MEM path FIFOs on Frame_Start; 1=Do not reset on Frame_Start.
20:16	RW	0x1f	enable_packets. [16] enable_raw. 1=Enable receive Raw data; 0=Ignore Raw data. [17] enable_yuv. 1=Enable receive YUV data; 0=Ignore YUV data. [18] enable_rgb. 1=Enable receive RGB data; 0=Ignore RGB data. [19] enable_embedded. 1=Enable receive Embedded data; 0=Ignore. [20] enable_user. 1=Enable receive User-define data; 0=Ignore User-define data.
15	RW	0	isp2ddr_wdone_mode. 0=After FrameEnd, assert interrupt when all previous writes are completed; 1=After (x_end_isp, y_end_isp) pixel are written to DDR, assert interrupt. However if somehow due to error, e.g. less lines are received, so that (x_end_isp, y_end_isp) never happens, then the interrupt will behave the same way as if cfg_ddr_wdone_mode=0 – assert interrupt after FrameEnd, when all previous writes are completed.
14	RW	0	buffer_ddr_wptr_other. 0=Reports the current ddr_wptr_other status; 1=Reports the buffered ddr_wptr_other status that was buffered at Frame_Start.
13	RW	0	ddr_64byte. HW uses it to calculate stride for Embedded or User-Defined address increment per line-end. 0=DDR is most efficient when address is 16-byte aligned; 1=DDR is most efficient when address is 64-byte aligned.
12	RW	0	mem2ddr_wdone_mode. 0=After FrameEnd, assert interrupt when all previous writes are completed; 1=After (x_end_mem, y_end_mem) pixel are written to DDR, assert interrupt. However if somehow due to error, e.g. less lines are received, so that (x_end_mem, y_end_mem) never happens, then the interrupt will behave the same way as if cfg_ddr_wdone_mode=0 – assert interrupt after FrameEnd, when all previous writes are completed.
11	RW	0	buffer_pic_size. Applicable only to direct path. 0=For active video size status, use non-buffered/instataneous line/pixel count; 1=For active video size status, use line/pixel count that are buffered at end of field.
10	RW	0	use_null_packet. 0=Ignore Null packet; 1=Regard Null packet as one line.
9	RW	0	inv_field. Applicable only to interlace video to direct path. 0=first field is odd; 1=first field is even.
8	RW	0	interlace_en. Applicable only to direct path. 0=Progressive; 1=Interlace.
7	W	0	ddr_pingpong_init_set. Always read 0. Set to 1 when need to load ddr_pingpong_init_val into effect.
6	RW	0	ddr_pingpong_init_val. Only valid when ddr_pingpong_init_set=1. 0=Very 1st frame use start_addr; 1=Very 1st frame use start_addr_alt.
5	RW	0	ddr_pingpong_en. 0=DDR update with a new start_addr at every Frame_Start; 1=DDR set a pair of start_addr and start_addr_alt at INIT, and then DDR pointer will be ping-ponged at every Frame_Start.

Amlogic Proprietary and Confidential
Copyright © Amlogic. All rights reserved.

Bit	R/W	Default	Description
4	RW	0	all_to_mem. 0=Depends on data type, some type might go to direct path, some might go to memory; 1=All data will go to memory, regardless of data type. In DOL2 mode, if isp2ddr_enable=1, direct-path and mem-path will go to different MEM locations; if isp2ddr_enable=0, both paths will go to same MEM location defined by CSI2_DDR_START_PIX/_ALT.
3:0	RW	0	virtual_channel_en: Enable one or more virtual channels at input. Bit[0] 1=Enable virtual channel 0, 0=Disable virtual channel 0; Bit[1] 1=Enable virtual channel 1, 0=Disable virtual channel 1; Bit[2] 1=Enable virtual channel 2, 0=Disable virtual channel 2; Bit[3] 1=Enable virtual channel 3, 0=Disable virtual channel 3;

Table 7-387 CSI2_GEN_CTRL1

Bit	R/W	Default	Description
31:8	R	0	Reserved
7:6	RW	3	din_byte3_sel: Re-map the received 32-bit data's byte3. 0=Use input data's byte0 as actual byte3; 1=Use input data's byte1 as actual byte3; 2=Use input data's byte2 as actual byte3; 3=Use input data's byte3 as actual byte3.
5:4	RW	2	din_byte2_sel: Re-map the received 32-bit data's byte2. 0=Use input data's byte0 as actual byte2; 1=Use input data's byte1 as actual byte2; 2=Use input data's byte2 as actual byte2; 3=Use input data's byte3 as actual byte2.
3:2	RW	1	din_byte1_sel: Re-map the received 32-bit data's byte1. 0=Use input data's byte0 as actual byte1; 1=Use input data's byte1 as actual byte1; 2=Use input data's byte2 as actual byte1; 3=Use input data's byte3 as actual byte1.
1:0	RW	0	din_byte0_sel: Re-map the received 32-bit data's byte0. 0=Use input data's byte0 as actual byte0; 1=Use input data's byte1 as actual byte0; 2=Use input data's byte2 as actual byte0; 3=Use input data's byte3 as actual byte0.

Table 7-388 CSI2_X_START_END_ISP

Bit	R/W	Default	Description
31:16	RW	0xffff	x_end_isp. Applicable only to Raw data, direct ISP path.
15:0	RW	0	x_start_isp . Applicable only to Raw data, direct ISP path.

Table 7-389 CSI2_Y_START_END_ISP

Bit	R/W	Default	Description
31:16	RW	0xffff	y_end_isp. Applicable only to Raw data, direct ISP path.
15:0	RW	0	y_start_isp . Applicable only to Raw data, direct ISP path.

Amlogic Proprietary and Confidential
Copyright © Amlogic. All rights reserved.

Table 7-390 CSI2_X_START_END_MEM

Bit	R/W	Default	Description
31:16	RW	0xffff	x_end_mem. Applicable only to Raw data, direct MEM path.
15:0	RW	0	x_start_mem. Applicable only to Raw data, MEM path.

Table 7-391 CSI2_Y_START_END_MEM

Bit	R/W	Default	Description
31:16	RW	0xffff	y_end_mem. Applicable only to Raw data, direct MEM path.
15:0	RW	0	y_start_mem. Applicable only to Raw data, MEM path.

Table 7-392 CSI2_VC_MODE

Bit	R/W	Default	Description
31:28	RW	0xf	vs_oth_sel_vc. The VS signal for non-pix-based data, is the logic operation of |(VS[all_4_channel_pre_reassign] & vs_oth_sel_vc[3:0]).
27:24	RW	0xf	vs_mem_sel_vc. The VS signal that goes to MEM path, is the logic operation of |(VS[all_4_channel_pre_reassign] & vs_mem_sel_vc[3:0]).
23:20	RW	0xf	hs_isp_sel_vc. The HS signal that goes to direct path, is the logic operation of |(HS[all_4_channel_pre_reassign] & hs_isp_sel_vc[3:0]).
19:16	RW	0xf	vs_isp_sel_vc. The VS signal that goes to direct path, is the logic operation of |(VS[all_4_channel_pre_reassign] & vs_isp_sel_vc[3:0]).
15:14	RW	0	vc_mode3[3]. Applicable only to Raw/RGB/YUV data.
13:12	RW	0	vc_mode3[2]. Applicable only to Raw/RGB/YUV data.
11:10	RW	0	vc_mode3[1]. Applicable only to Raw/RGB/YUV data.
9:8	RW	0	vc_mode3[0]. Applicable only to Raw/RGB/YUV data.
7:6	RW	0	vc_to_isp. Applicable only to Raw/RGB/YUV data. After VC re-assignment (if applicable), if the input data's VC==vc_to_isp, then the data go to direct path, otherwise it go to MEM path.
5:4	RW	0	vc_val1. Applicable only to Raw/RGB/YUV data.
3:2	RW	0	vc_val0. Applicable only to Raw/RGB/YUV data.
1:0	RW	0	assign_vc_mode. Applicable only to Raw/RGB/YUV data. 0=No virtual_channel re-assign. 1=Even line's VC=vc_val0, Odd line's VC=vc_val1. 2=If the first 64-bit (Payload | vc_mode2_match_mask_A) ==(vc_mode2_match_A | vc_mode2_match_mask_A), this line's VC=vc_val0; If the first 64-bit (Payload | vc_mode2_match_mask_B) ==(vc_mode2_match_B | vc_mode2_match_mask_B), this line is VC=vc_val1; Otherwise this line is to be ignored. 3=Reassign this line's VC to vc_mode3[VC].

Amlogic Proprietary and Confidential
Copyright © Amlogic. All rights reserved.

Table 7-393 CSI2_VC_MODE2_MATCH_MASK_A_L

Bit	R/W	Default	Description
31:0	RW	0	vc_mode2_match_mask_A[31:0]. Refer to assign_vc_mode.

Table 7-394 CSI2_VC_MODE2_MATCH_MASK_A_H

Bit	R/W	Default	Description
31:0	RW	0	vc_mode2_match_mask_A[63:32]. Refer to assign_vc_mode.

Table 7-395 CSI2_VC_MODE2_MATCH_A_L

Bit	R/W	Default	Description
31:0	RW	0	vc_mode2_match_A[31:0]. Refer to assign_vc_mode.

Table 7-396 CSI2_VC_MODE2_MATCH_A_H

Bit	R/W	Default	Description
31:0	RW	0	vc_mode2_match_A[63:32]. Refer to assign_vc_mode.

Table 7-397 CSI2_VC_MODE2_MATCH_B_L

Bit	R/W	Default	Description
31:0	RW	0	vc_mode2_match_B[31:0]. Refer to assign_vc_mode.

Table 7-398 CSI2_VC_MODE2_MATCH_B_H

Bit	R/W	Default	Description
31:0	RW	0	vc_mode2_match_B[63:32]. Refer to assign_vc_mode.

Table 7-399 CSI2_DDR_START_PIX

Bit	R/W	Default	Description
31:0	RW	0	DDR start address for pixel-based data (Raw/RGB/YUV). Must be 16-byte aligned, so low 4-bit will be ignored. For MEM path.

Table 7-400 CSI2_DDR_START_PIX_ALT

Bit	R/W	Default	Description
31:0	RW	0	Alternative DDR start address for pixel-based data (Raw/RGB/YUV). Refer to ddr_pingpong_en. Must be 16-byte aligned, so low 4-bit will be ignored. For MEM path.

Amlogic Proprietary and Confidential
Copyright © Amlogic. All rights reserved.

Table 7-401 CSI2_DDR_STRIDE_PIX

Bit	R/W	Default	Description
31:0	RW	0	DDR line stride for pixel-based data (Raw/RGB/YUV). Must be 16-byte aligned, so low 4-bit will be ignored. For MEM path.

Table 7-402 CSI2_DDR_START_OTHER

Bit	R/W	Default	Description
31:0	RW	0	DDR start address for non-pixel-based data (Embedded or User-defined). Must be 16-byte aligned, so low 4-bit will be ignored.

Table 7-403 CSI2_DDR_START_OTHER_ALT

Bit	R/W	Default	Description
31:0	RW	0	Alternative DDR start address for non-pixel-based data (Embedded or User-defined). Refer to ddr_pingpong_en. Must be 16-byte aligned, so low 4-bit will be ignored.

Table 7-404 CSI2_DDR_MAX_BYTES_OTHER

Bit	R/W	Default	Description
31:0	RW	0	Maximum bytes allocated to DDR for storing non-pixel-based data (Embedded or User-defined).

Note

About reading Embedded or User-defined packets from DDR The first packet starts from CSI2_DDR_START_OTHER(_ALT). Byte0={virtual_channel[1:0],data_type[5:0]}; Byte1=word_count[7:0]; Byte2=word_count[15:8]; The rest of the bytes are packet payload bytes, total bytes of payload is word_count, with lowest byte first, highest byte last. SW calculates where to read the next packet, (if there is any): new_packet_start_addr = last_packet_start_addr + (((last_packet_word_count+3)+M-1)/M)*M Where M is defined by CSI2_GEN_CTRL0's bit[13] – ddr_64byte. If cfg_ddr_64byte=0, M=16; if ddr_64byte=1, M=64. If the new_packet_start_addr >= the value read from CSI2_DDR_WPTR_STAT_OTHER. Then there is no more packets. Do not read the content starting from new_packet_start_addr. CSI2_DDR_WPTR_STAT_OTHER's value can be current address pointer or previous address pointer buffered by Frame_Start.

Table 7-405 CSI2_INTERRUPT_CTRL_STAT

Bit	R/W	Default	Description
31:22	R	0	Reserved
21:16	RW	0	interrupt status/clear. [16] vs_rise_isp sticky status, write 1 to clear it; [17] vs_fall_isp sticky status, write 1 to clear it; [18] mem2ddr_wdone sticky status, write 1 to clear it; [19] vs_rise_mem sticky status, write 1 to clear it; [20] vs_fall_mem sticky status, write 1 to clear it; [21] isp2ddr_wdone sticky status, write 1 to clear it.

Amlogic Proprietary and Confidential
Copyright © Amlogic. All rights reserved.

Bit	R/W	Default	Description
15:6	R	0	Reserved
5:0	RW	0	interrupt_sel. Enable one or more interrupts. [0]=1 to enable vs_rise_isp interrupt; [1]=1 to enable vs_fall_isp interrupt; [2]=1 to enable mem2ddr_wdone interrupt; [3]=1 to enable vs_rise_mem interrupt; [4]=1 to enable vs_fall_mem interrupt; [5]=1 to enable isp2ddr_wdone interrupt.

Table 7-406 CSI2_VC_MODE2_MATCH_MASK_B_L

Bit	R/W	Default	Description
31:0	RW	0	vc_mode2_match_mask_B[31:0]. Refer to assign_vc_mode.

Table 7-407 CSI2_VC_MODE2_MATCH_MASK_B_H

Bit	R/W	Default	Description
31:0	RW	0	vc_mode2_match_mask_B[63:32]. Refer to assign_vc_mode.

Table 7-408 CSI2_DDR_LOOP_LINES_PIX

Bit	R/W	Default	Description
31:16	RW	0xffff	isp2ddr_loop_lines_pix. For direct path. DDR address increment (isp2ddr_loop_lines_pix+1) lines, before loops back to start address.
15:0	RW	0xffff	mem2ddr_loop_lines_pix. For MEM path. DDR address increment (mem2ddr_loop_lines_pix+1) lines, before loops back to start address.

Table 7-409 CSI2_GEN_STAT0

Bit	R/W	Default	Description
31:10	R	0	Reserved
9	R	0	afifo_nempty.
8	R	0	afifo_full.
7:6	R	0	Reserved
5:0	R	0	afifo_count. The counter of async FIFO at input.

Table 7-410 CSI2_ERR_STAT0

Bit	R/W	Default	Description
31:15	R	0	Reserved
14	R	0	err_axi_overdue_oth
13	R	0	err_axi_overdue_isp
12	R	0	err_addr_other_overfl

Amlogic Proprietary and Confidential
Copyright © Amlogic. All rights reserved.

Bit	R/W	Default	Description
11	R	0	err_axi_overdue_mem
10	R	0	err_bfifo_underfl
9	R	0	err_bfifo_overfl
8	R	0	err_axi_bresp
7	R	0	err_axi_bresp_extra
6	R	0	err_wfifo_underfl
5	R	0	err_wfifo_overfl
4	R	0	err_awfifo_underfl
3	R	0	err_awfifo_overfl
2	R	0	err_afifo_ovfl
1	R	0	err_wc_ovfl
0	R	0	err_wc_unfl

Table 7-411 CSI2_PIC_SIZE_STAT

Bit	R/W	Default	Description
31:16	R	0	line_count measure for direct path only. Maybe buffered or non-buffered, depends on buffer_pic_size.
15:0	R	0	pix_count measure for direct path only. Maybe buffered or non-buffered, depends on buffer_pic_size.

Table 7-412 CSI2_DDR_WPTR_STAT_PIX

Bit	R/W	Default	Description
31:0	R	0	Memory pointer for pixel lines. Always current status. For MEM path.

Table 7-413 CSI2_DDR_WPTR_STAT_OTHER

Bit	R/W	Default	Description
31:0	R	0	Memory pointer for non-pixel lines. Can be buffered or current status depending on buffer_ddr_wptr_other.

Table 7-414 CSI2_STAT_MEM_0

Bit	R/W	Default	Description
31:20	R	0	Reserved
19:10	R	0	wfifo_count.
9	R	0	axi_w_state. 0=AXI_W_IDLE; 1=AXI_W_WAIT_READY

Amlogic Proprietary and Confidential
Copyright © Amlogic. All rights reserved.

Bit	R/W	Default	Description
8:2	R	0	awfifo_cnt.
1:0	R	0	axi_aw_state. 0=AXI_AW_IDEL; 1= AXI_AW_WAIT_READY; 2= AXI_AW_WAIT_W.

Table 7-415 CSI2_STAT_MEM_1

Bit	R/W	Default	Description
31:16	R	0	aw_pending_cnt_mem.
15:0	R	0	y_pos_mem. Current line number, for MEM path's RAW/RGB/YUV data only.

Table 7-416 CSI2_STAT_MEM_2

Bit	R/W	Default	Description
31:16	R	0	aw_pending_cnt_isp.
15:0	R	0	y_pos_isp. Current line number, for ISP path's RAW/RGB/YUV data only.

Table 7-417 CSI2_STAT_GEN_SHORT_08

Bit	R/W	Default	Description
18	R	0	General Short Packet (type=0x08) receive flag. The flag will be cleared once the register is read. 0=Not received; 1=Received new packet.
17:16	R	0	Virtual Channel for General Short Packet (type=0x08).
15:0	R	0	Recevied General Short Packet (type=0x08).

Table 7-418 CSI2_STAT_GEN_SHORT_09

Bit	R/W	Default	Description
18	R	0	General Short Packet (type=0x09) receive flag. The flag will be cleared once the register is read. 0=Not received; 1=Received new packet.
17:16	R	0	Virtual Channel for General Short Packet (type=0x09).
15:0	R	0	Recevied General Short Packet (type=0x09).

Amlogic Proprietary and Confidential
Copyright © Amlogic. All rights reserved.

Table 7-419 CSI2_STAT_GEN_SHORT_0A

Bit	R/W	Default	Description
18	R	0	General Short Packet (type=0x0A) receive flag. The flag will be cleared once the register is read. 0=Not received; 1=Received new packet.
17:16	R	0	Virtual Channel for General Short Packet (type=0x0A).
15:0	R	0	Recevied General Short Packet (type=0x0A).

Table 7-420 CSI2_STAT_GEN_SHORT_0B

Bit	R/W	Default	Description
18	R	0	General Short Packet (type=0x0B) receive flag. The flag will be cleared once the register is read. 0=Not received; 1=Received new packet.
17:16	R	0	Virtual Channel for General Short Packet (type=0x0B).
15:0	R	0	Recevied General Short Packet (type=0x0B).

Table 7-421 CSI2_STAT_GEN_SHORT_0C

Bit	R/W	Default	Description
18	R	0	General Short Packet (type=0x0C) receive flag. The flag will be cleared once the register is read. 0=Not received; 1=Received new packet.
17:16	R	0	Virtual Channel for General Short Packet (type=0x0C).
15:0	R	0	Recevied General Short Packet (type=0x0C).

Table 7-422 CSI2_STAT_GEN_SHORT_0D

Bit	R/W	Default	Description
18	R	0	General Short Packet (type=0x0D) receive flag. The flag will be cleared once the register is read. 0=Not received; 1=Received new packet.
17:16	R	0	Virtual Channel for General Short Packet (type=0x0D).
15:0	R	0	Recevied General Short Packet (type=0x0D).

Amlogic Proprietary and Confidential
Copyright © Amlogic. All rights reserved.

Table 7-423 CSI2_STAT_GEN_SHORT_0E

Bit	R/W	Default	Description
18	R	0	General Short Packet (type=0x0E) receive flag. The flag will be cleared once the register is read. 0=Not received; 1=Received new packet.
17:16	R	0	Virtual Channel for General Short Packet (type=0x0E).
15:0	R	0	Recevied General Short Packet (type=0x0E).

Table 7-424 CSI2_STAT_GEN_SHORT_0F

Bit	R/W	Default	Description
18	R	0	General Short Packet (type=0x0F) receive flag. The flag will be cleared once the register is read. 0=Not received; 1=Received new packet.
17:16	R	0	Virtual Channel for General Short Packet (type=0x0F).
15:0	R	0	Recevied General Short Packet (type=0x0F).

Table 7-425 CSI2_STAT_TYPE_RCVD_L

Together with CSI2_STAT_TYPE_RCVD_H, to form 64-bit flags to record type of packets that have been received. Write 1 to each bit to clear the corresponding flag for each type.

Bit	R/W	Default	Description
31	RW	0	If read back 1, DataType=31 has been received. Write 1 to this bit to clear the receive flag.
30:2	RW	0	Same as the rest…
1	RW	0	If read back 1, DataType=1 has been received. Write 1 to this bit to clear the receive flag.
0	RW	0	If read back 1, DataType=0 has been received. Write 1 to this bit to clear the receive flag.

Table 7-426 CSI2_STAT_TYPE_RCVD_H

Bit	R/W	Default	Description
31	RW	0	If read back 1, DataType=63 has been received. Write 1 to this bit to clear the receive flag.
30:2	RW	0	Same as the rest…
1	RW	0	If read back 1, DataType=33 has been received. Write 1 to this bit to clear the receive flag.
0	RW	0	If read back 1, DataType=32 has been received. Write 1 to this bit to clear the receive flag.

Amlogic Proprietary and Confidential
Copyright © Amlogic. All rights reserved.

Table 7-427 CSI2_DDR_START_PIX_B

Bit	R/W	Default	Description
31:0	RW	0	DDR start address for pixel-based data (Raw/RGB/YUV). Must be 16-byte aligned, so low 4-bit will be ignored. For direct path.

Table 7-428 CSI2_DDR_START_PIX_B_ALT

Bit	R/W	Default	Description
31:0	RW	0	Alternative DDR start address for pixel-based data (Raw/RGB/YUV). Refer to ddr_pingpong_en. Must be 16-byte aligned, so low 4-bit will be ignored. For direct path.

Table 7-429 CSI2_DDR_STRIDE_PIX_B

Bit	R/W	Default	Description
31:0	RW	0	DDR line stride for pixel-based data (Raw/RGB/YUV). Must be 16-byte aligned, so low 4-bit will be ignored. For direct path.

Table 7-430 CSI2_DDR_WPTR_STAT_PIX_B

Bit	R/W	Default	Description
31:0	R	0	Memory pointer for pixel lines. Always current status. For direct path.

Table 7-431 CSI2_STAT_MEM_3

Bit	R/W	Default	Description
31:16	R	0	aw_pending_cnt_oth.
15:0	R	0	Reserved

Table 7-432 CSI2_AXI_UGT_CNTL0

Bit	R/W	Default	Description
31	RW	0	reg_ugt_auto_en 1.frontend axi auto urgent enable
30:16	RW	0	reg_ugt_th1 axi urgent change to 0,when wfifo_cnt < th1
14:0	RW	0	reg_ugt_th0 axi urgent change to 1,when wfifo_cnt >= th0 NOTE: th0 >= th1

Amlogic Proprietary and Confidential
Copyright © Amlogic. All rights reserved.

Table 7-433 CSI2_AXI_UGT_CNTL1

Bit	R/W	Default	Description
31	RW	0	reg_sideband_auto_en 1.frontend axi auto sideband enable
30:16	RW	0	reg_sideband_th1 axi sideband change to 0,when wfifo_cnt < th1
14:0	RW	0	reg_sideband_th0 axi sideband change to 1,when wfifo_cnt >= th0 NOTE: th0 >= th1

Table 7-434 CSI2_AXI_UGT_ST

Bit	R/W	Default	Description
17	R	0	axi_sideband value
16	R	0	axi_ugt value
15:0	R	0	fifo_count

Table 7-435 CSI2_LINE_SUP_CNTL0

Bit	R/W	Default	Description
31:20	RW	0	src_err_mem_en fifo err define in CSI2_ERR_STAT0,can trigger sub_overflow when each bit set to 1
19	RW	0	both_ov_en 1:will set both isp2ddr path and mem2ddr path sub_overflow
18	RW	0	soft_rst set 1 to reset this module
17	RW	0	line_sup_sel 1:line supply on mem2ddr path 0:line supply on isp2ddr path
16	RW	0	line_sup_en line supply enable
15	RW	0	line_sup_vs_sel 1:use mem2ddr vsync to sync 0:use isp2ddr vsync to sync
14	RW	0	ovflow_st_clr set 1 to clear overflow status
13:0	RW	0	line_min_num min data number per each line,N-1 Byte

Table 7-436 CSI2_LINE_SUP_ST

Bit	R/W	Default	Description
20	R	0	r_fifo_ov_st
19:18	R	0	r_sup_din_bytes_en
17	R	0	r_fifo_rd_mask

Amlogic Proprietary and Confidential
Copyright © Amlogic. All rights reserved.

Bit	R/W	Default	Description
16	R	0	r_fifo_ov
15:0	R	0	r_pixel_cnt

Table 7-437 MIPI_ADAPT_DDR_RD0_CNTL0 0x00

Bit(s)	R/W	Default	Description
31	RW	0x0	frame_rd_start start read frame data from ddr, used in single frame read scenario, this bit is self-cleared
29:28	RW	0x0	burst_type burst type for AXI read command 0: single 1: incr2 2: incr4 3: inrc8
27:26	RW	0x0	reg_sample_sel By default, control register will be latched from apb clk domain to vclk domain by enable and soft_load, you can use the following signal to latch the control register too 0: at posedge of frame_rd_start 1: din_vs,isp path vsync 2: fe_line_wr_vs,ddr path vsync 3: reserved
25	RW	0x0	soft_load control register will be latched from apb clk domain to vclk domain at posedge of soft_load
24	RW	0x0	continue_mode Used in ddr mode, if this bit is high, continuous frames will be read from ddr without any software control in every vblank period 0: single frame scenario 1: multiple frame scenario
23	RW	0x0	dol_mode 0: single exposure mode 1: DOL mode for HDR, 2-exposure mode
22	RW	0x0	pingpong_mode This bit is used for frame base address control. 0: frame_base_address_0 is used 1: frame_base_address_0 and frame_base_address_1 are used alternately
21	RW	0x0	dol_time_out_en Enable for the timeout control in DOL mode. 0: disable 1: enable
18	RW	0x0	dol_frame_end_en Enable ddr_rd module read the missing lines when frontend module write less lines than expection, only used in DOL mode
17	RW	0x0	dol_vblank_clr_sel In DOL mode, vblank flag is set by frame write done flag from frontend module, and clear by the following signal: 0: ddr_rd has read all the lines from ddr for a frame 1: vsync from frontend module
15:14	RW	0x0	dol_time_tick_sel don_timeout count tick 0:vclk 1:xtal3_tick 2:1us_tick

Amlogic Proprietary and Confidential
Copyright © Amlogic. All rights reserved.

Bit(s)	R/W	Default	Description
			3:10us_tick
13:4	RW	0x0	line_stride mem stride for a line, unit: 128bit
3:2	RW	0x0	lbuf_soft_rst_sel Line buffer 0 soft reset source select 0: reserved 1: din_vs 2: fe_line_wr_vs 3: frame_vs_rst
1	RW	0x0	frame loop mode enable
0	RW	0x0	Module enable for ddr_rd

Table 7-438 MIPI_ADAPT_DDR_RD0_CNTL1 0x01

Bit(s)	R/W	Default	Description
31:30	RW	0x0	port_sel 0: direct path mode, data from direct path input with RAW 1: ddr mode, data from ddr with RAW/YUV/RGB 2: direct comb mode,data from direct path input with RGB/YUV
29	RW	0x0	frame_vs_rst_en reset at frame_vs,frame_vs sel by frame_vs_rst_sel
28:16	RW	0x0	line_number Line number in a frame,when N ,set N
15:12	RW	0x0	dol_line_threshold In DOL mode, ddr_rd start to read frame data from ddr when frontend module has written “dol_line_threshold” lines into ddr
11:10	RW	0x0	frame_vs_rst_sel 0: din_vs 1:fe_line_wr_vs 2:din_vs&lbuf_overflow 3:fe_line_wr_vs & lbuf_overflow
9:0	RW	0x0	line_size Data size for a line, unit: 128bit

Table 7-439 MIPI_ADAPT_DDR_RD0_CNTL2 0x02

Bit(s)	R/W	Default	Description
31:0	RW	0x0	frame_base_address_0 Base address 0 for frame data

Table 7-440 MIPI_ADAPT_DDR_RD0_CNTL3 0x03

Bit(s)	R/W	Default	Description
31:0	RW	0x0	frame_base_address_1 Base address 1 for frame data, valid in pingpong mode

Amlogic Proprietary and Confidential
Copyright © Amlogic. All rights reserved.

Table 7-441 MIPI_ADAPT_DDR_RD0_CNTL4 0x04

Bit(s)	R/W	Default	Description
31:13	RW	0x0	dol_time_out Set the IDLE period in vck cycle for frontend-ddr_rd interface to set the time out flag, valid in DOL mode
12:0	RW	0x0	line_threshold line number threshold for interrupt, when ddr_rd has read “line_threshold” lines, it will send out an interrupt flag

Table 7-442 MIPI_ADAPT_DDR_RD0_CNTL5 0x05

Bit(s)	R/W	Default	Description
31:0	RW	0x0	frame_end_address_0 end address 0 for frame data in loop mode

Table 7-443 MIPI_ADAPT_DDR_RD0_CNTL6 0x06

Bit(s)	R/W	Default	Description
31:0	RW	0x0	frame_end_address_1 end address 1 for frame data in loop mode

Table 7-444 MIPI_ADAPT_DDR_RD0_UGT_CNTL0 0x07

Bit(s)	R/W	Default	Description
31	RW	0	reg_ugt_auto_en 1. axi auto urgent enable
30:16	RW	0	reg_ugt_th1 axi urgent change to 0,when wfifo_cnt >= th1
14:0	RW	0	reg_ugt_th0 axi urgent change to 1,when wfifo_cnt < th0 NOTE: th0 >= th1

Table 7-445 MIPI_ADAPT_DDR_RD0_UGT_CNTL1 0x08

Bit(s)	R/W	Default	Description
31	RW	0	reg_sideband_auto_en 1.axi auto sidebandenable
30:16	RW	0	reg_ugt_th1 axi sideband change to 0,when wfifo_cnt >= th1
14:0	RW	0	reg_ugt_th0 axi sideband change to 1,when wfifo_cnt < th0 NOTE: th0 >= th1

Amlogic Proprietary and Confidential
Copyright © Amlogic. All rights reserved.

Table 7-446 MIPI_ADAPT_DDR_RD0_ST0 0x0a

Bit(s)	R/W	Default	Description
31	R	0x0	pixel_line_valid Valid line period for direct path
19:8	R	0x0	lbuf_counter Valid data number in line buffer
7:4	R	0x0	fe_frame_wr_counter Frame numbers present in DDR for read
3	R	0x0	lbuf_not_full full flag for line buffer 0: full 1: not full
2:0	R	0x0	ddr_rd_state Internal FSM state for ddr read control

Table 7-447 MIPI_ADAPT_DDR_RD0_ST1 0x0b

Bit(s)	R/W	Default	Description
31	R	0x0	frame_base_address_sel Indicate which base address is used for current frame 0: frame_base_address_0 1: frame_base_address_1
28:16	R	0x0	v_counter Line number that has been read from ddr for a frame
11:0	R	0x0	line_count data number that has been read from ddr for a line

Table 7-448 MIPI_ADAPT_DDR_RD0_ST2 0x0c

Bit(s)	R/W	Default	Description
29	R	0x0	fe_line_wr_done_mask Indicate frontend has written more lines than expection to ddr for a frame
28:16	R	0x0	fe_line_wr_counter Valid Line number present in ddr, valid in DOL mode
13	R	0x0	dol_timeout_valid Time out flag in DOL mode
12:0	R	0x0	dol_frame_line_cnt Line number that frontend has written to ddr, valid in DOL mode

Table 7-449 MIPI_ADAPT_DDR_RD0_UGT_ST 0x0d

Bit(s)	R/W	Default	Description
29	R	0x0	axi_sideband value
28:16	R	0x0	axi_ugt value
13	R	0x0	fifo_count

Amlogic Proprietary and Confidential
Copyright © Amlogic. All rights reserved.

Table 7-450 DDR_RD0_LBUF_STATUS 0x7a

Bit(s)	R/W	Default	Description
19	R	0x0	ddr_rd_0_lbuf_overflow
18	R	0x0	ddr_rd_0_lbuf_underflow
17	R	0x0	ddr_rd_0_lbuf_full
16	R	0x0	ddr_rd_0_lbuf_halffull
15	R	0x0	ddr_rd_0_lbuf_empty
12:0	R	0x0	ddr_rd_0_lbuf_count

MIPI_ADAPT_DDR_RD1_CNTL0 0x10 Same as MIPI_ADAPT_DDR_RD0_CNTL0

MIPI_ADAPT_DDR_RD1_CNTL1 0x11 Same as MIPI_ADAPT_DDR_RD0_CNTL1

MIPI_ADAPT_DDR_RD1_CNTL2 0x12 Same as MIPI_ADAPT_DDR_RD0_CNTL2

MIPI_ADAPT_DDR_RD1_CNTL3 0x13 Same as MIPI_ADAPT_DDR_RD0_CNTL3

MIPI_ADAPT_DDR_RD1_CNTL4 0x14 Same as MIPI_ADAPT_DDR_RD0_CNTL4

MIPI_ADAPT_DDR_RD1_CNTL5 0x15 Same as MIPI_ADAPT_DDR_RD0_CNTL5

MIPI_ADAPT_DDR_RD1_CNTL6 0x16 Same as MIPI_ADAPT_DDR_RD0_CNTL6

MIPI_ADAPT_DDR_RD1_UGT_CNTL0 0x17 Same as MIPI_ADAPT_DDR_RD0_UGT_CNTL0

MIPI_ADAPT_DDR_RD1_UGT_CNTL1 0x18 Same as MIPI_ADAPT_DDR_RD0_UGT_CNTL1

MIPI_ADAPT_DDR_RD1_ST0 0x1a Same as MIPI_ADAPT_DDR_RD0_ST0

MIPI_ADAPT_DDR_RD1_ST1 0x1b Same as MIPI_ADAPT_DDR_RD0_ST1

MIPI_ADAPT_DDR_RD1_ST2 0x1c Same as MIPI_ADAPT_DDR_RD0_ST2

MIPI_ADAPT_DDR_RD0_UGT_ST 0x1d Same as MIPI_ADAPT_DDR_RD1_UGT_ST

DDR_RD1_LBUF_STATUS 0x7b same as DDR_RD0_LBFU_STATUS

Table 7-451 MIPI_ADAPT_PIXEL0_CNTL0 0x20

Bit(s)	R/W	Default	Description
31	RW	0x0	start_en Start enable,write 1 to start ,will auto clear to 0
30	RW	0x0	soft_load reload register value, will auto clear to 0
25:20	RW	0x0	data_type 6'h1e:YUV422 8BIT 6'h1f:YUV422 10BIT 6'h20:RGB444 6'h21:RGB555 6'h22:RGB565 6'h23:RGB666 6'h24:RGB888 6'h28:RAW6 6'h29:RAW7 6'h2a:RAW8 6'h2b:RAW10 6'h2c:RAW12 6'h2d:RAW14
17:16	RW	0x0	work mode 0:RAW from ddr path

Amlogic Proprietary and Confidential
Copyright © Amlogic. All rights reserved.

Bit(s)	R/W	Default	Description
			1:RAW from direct path 2:YUV/RGB from ddr path 3:YUV/RGB from direct path
14	RW	0x0	color_expand 0=Expand less than 10-bit component to 10-bit, by appending 0; 1=Expand less than 10-bit component to 10-bit, by appending MSBs.
12:0	RW	0x0	fifo_threshold start work after lbuf valid level >= fifo_threshold value

Table 7-452 MIPI_ADAPT_PIXEL0_CNTL1 0x21

Bit(s)	R/W	Default	Description
31:16	RW	0x0	pixel_x_start
15:0	RW	0xffff	pixel_x_end

Table 7-453 MIPI_ADAPT_PIXEL0_CNTL2 0x22

Bit(s)	R/W	Default	Description
27:15	RW	0x0	pixel_num pixel number per line, set N
9:0	RW	0X0	fifo_rd_size 128bit number per line ,set N

Table 7-454 MIPI_ADAPT_PIXEL0_CNTL3 0x23

Bit(s)	R/W	Default	Description
31	RW	0x0	frame_sync_delay_en add delay to frame_sync
30:16	RW	0x0	frame_sync_delay_time
2	RW	0X0	frame_sync_en frame_sync enable
1	RW	0X0	frame_sync_rst_en use frame_sync reset module
0	RW	0X0	frame_sync_load_en use frame_sync reload registers

Table 7-455 MIPI_ADAPT_PIXEL0_ST0 0x2a

Bit(s)	R/W	Default	Description
31:30	R	0x0	r_pixel_st
29	R	0x0	r_pixel_dsr
28:16	R	0x0	r_ddr_mode_pixel_set_cnt
15	R	0x0	fifo_rd_start
14	R	0x0	trans_start

Amlogic Proprietary and Confidential
Copyright © Amlogic. All rights reserved.

Bit(s)	R/W	Default	Description
13	R	0x0	r_last_pixel_finish
12	R	0x0	fifo_rd_pixel_mask
11:10	R	0x0	pixel_fifo_count_v
9:0	R	0x0	fifo_rd_cnt

Table 7-456 MIPI_ADAPT_PIXEL0_ST1 0x2b

Bit(s)	R/W	Default	Description
31:30	R	0x0	pixel_fifo_count
29:28	R	0x0	r_buf_step_cnt
24:16	R	0x0	r_data_buf_cnt
14:8	R	0x0	r_info_buf_cnt
6:0	R	0x0	r_data_buf_remain_cnt

MIPI_ADAPT_PIXEL1_CNTL0 0x30

Same as MIPI_ADAPT_PIXEL0_CNTL0

MIPI_ADAPT_PIXEL1_CNTL1 0x31

Same as MIPI_ADAPT_PIXEL0_CNTL1

MIPI_ADAPT_PIXEL1_CNTL2 0x32

Same as MIPI_ADAPT_PIXEL0_CNTL2

MIPI_ADAPT_PIXEL1_CNTL3 0x33

Same as MIPI_ADAPT_PIXEL0_CNTL3

MIPI_ADAPT_PIXEL1_ST0 0x3a

Same as MIPI_ADAPT_PIXEL0_ST0

MIPI_ADAPT_PIXEL1_ST1 0x3b

Same as MIPI_ADAPT_PIXEL0_ST0

Table 7-457 MIPI_ADAPT_ALIG_CNTL0 0x40

Bit(s)	R/W	Default	Description
31:16	RW	0x0	h_total_num H total in a line,when N,set N
15:0	RW	0x0	v_total_num V total in a frame,when N,set N

Amlogic Proprietary and Confidential
Copyright © Amlogic. All rights reserved.

Table 7-458 MIPI_ADAPT_ALIG_CNTL1 0x41

Bit(s)	R/W	Default	Description
31:16	RW	0x0	hpe_num End pixel in a line,when N,set N
15:0	RW	0x0	hps_num Start pixel in a line,when N,set N+1

Table 7-459 MIPI_ADAPT_ALIG_CNTL2 0x42

Bit(s)	R/W	Default	Description
31:16	RW	0x0	vpe_num End line in a frame,when N,set N
15:0	RW	0x0	vps_num Start line in a frame,when N,set N+1

Table 7-460 MIPI_ADAPT_ALIG_CNTL3 0x43

Bit(s)	R/W	Default	Description
31:16	RW	0x0	frame_start_line Will valid ,When frame_sync_en =1 Can start at N line of frame at the time of frame_sync Should not greater than the vps_num(first valid line position)
15:0	RW	0x0	frame_start_pixel Will valid ,When frame_sync_en =1 Can start at N pixel of frame_start_line at the time of frame_sync Should be less than the h_num(h total)

Table 7-461 MIPI_ADAPT_ALIG_CNTL4 0x44

Bit(s)	R/W	Default	Description
29:0	RW	0x0	fill_data Fill data value when less line or less pixel in direct path,will use this value to fill the missing pixel

Amlogic Proprietary and Confidential
Copyright © Amlogic. All rights reserved.

Table 7-462 MIPI_ADAPT_ALIG_CNTL5 0x45

Bit(s)	R/W	Default	Description
31:20	RW	0x0	flow_done_src_en generate frame_end irq until source done_irq bit31:isp_core bit30:tnr_de_rd bit29:tnr_de_wr bit28:adapt_de_rd bit27:adapt_de_wr bit26:md2 bit25:flicker bit24:md bit23:ds2 bit22:ds1 bit21:ds0 bit20:crop mif
1	RW	0x0	frame_end_int_final_sel 1:frame_end_int use frame_end,last vblank cycle 0:frame_end_int use frame_last ,last valid pixel cycle
0	RW	0x0	dst_hold_gate set 1 to disable auto clk gate ,include source hold

Table 7-463 MIPI_ADAPT_ALIG_CNTL6 0x46

Bit(s)	R/W	Default	Description
31	RW	0x0	yuvrgb_mode need set 1 when input data format is YUV/RGB
31	RW	0x0	frame_end_load set 1 will auto load register value at frame_en
15	RW	0x0	vdata3_en 0:vdata3 disable 1:vdata3 enable
14	RW	0x0	vdata2_en 0:vdata2 disable 1:vdata2 enable
13	RW	0x0	vdata1_en 0:vdata1 disable 1:vdata1 enable
12	RW	0x0	vdata0_en 0:vdata0 disable 1:vdata0 enable
11	RW	0x0	vdata3_sel When camera_mode = 1,this bit replaced by camera_sel When camera_mode = 0,vdata3 select 0:lane0 data 1:lane1 data
10	RW	0x0	vdata2_sel When camera_mode = 1,this bit replaced by camera_sel When camera_mode = 0,vdata2 select 0:lane0 data 1:lane1 data
9	RW	0x0	vdata1_sel When camera_mode = 1,this bit replaced by camera_sel When camera_mode = 0,vdata1 select 0:lane0 data 1:lane1 data

Amlogic Proprietary and Confidential
Copyright © Amlogic. All rights reserved.

Bit(s)	R/W	Default	Description
8	RW	0x0	vdata0_sel When camera_mode = 1,this bit replaced by camera_sel When camera_mode = 0,vdata0 select 0:lane0 data 1:lane1 data
5	RW	0x0	pix_datamode_1 Pixel 1 data mode 0 ddr mode 1 direct mode
4	RW	0x0	pix_datamode_0 Pixel 0 data mode 0 ddr mode 1 direct mode
3	RW	0x0	0 lane1_sel Lane1 input source select pixel 0 pixel 1
2	RW	0x0	lane1_en 0 lane1 disable 1 lane1 enable When camera_mode =1,camera_sel should set to 1 to make lane1 enable
1	RW	0x0	lane0_sel Lane0 input source select 0 pixel 0 1 pixel 1
0	RW	0x0	lane0_en 0 lane0 disable 1 lane0 enable When camera_mode =1,camera_sel should set to 0 to make lane0 enable

Table 7-464 MIPI_ADAPT_ALIG_CNTL7 0x47

Bit(s)	R/W	Default	Description
31:16	RW	0x0	inc_mask_timeout When inc_mask_timeout_en = 1,those bits are valid will be timeout after when no valid data with direct mode in vvalid period after N x vclk cycles
15	RW	0x0	inc_mask_timeout_en 0:in_mask timeout disable 1:in_mask timeout enable
14	RW	0x0	frame_sync_rst_en 1.use frame_sync to reset this module
13	RW	0x0	frame_sync_load_en 1.use frame_sync to reload register value
1:0	RW	0x0	inc_mask_tick_sel 0:vclk 1:xtal3_tick 2:1us_tick 3:10us_tick

Amlogic Proprietary and Confidential
Copyright © Amlogic. All rights reserved.

Table 7-465 MIPI_ADAPT_ALIG_CNTL8 0x48

Bit(s)	R/W	Default	Description
31	RW	0x0	start_en Aligment start enable,will auto clear to 0
30	RW	0x0	Soft register load enable
30	RW	0x0	frame_vs_dst_dly_exc_clr clear all frame_vs_dst_dly_exc status
15	RW	0x0	Line irq enable,generate irq in configure number of line start
13	RW	0x0	no_frame_sv_sync_en When frame_sync_en =0,can start frame at frame_start_line and frame_start_ pixel after counter equal h_num and v_num
12	RW	0x0	exc_mask_dis When in direct mode pixel or line is received is more than setting,and the inc_ mask_timeout_en is valid,will treat it as pixel or line exceed,can select stop counter or not stop counter until received the lineend/frameend information. 0 hold counter when pixel or line exceed 1 not hold counter when pixel or line exceed
11	RW	0x0	mult_camera_req_sf_en mult_camera_req_sf disable 1 mult_camera_req_sf enable
10	RW	0x0	mult_camera_req_sf ISP in mult camera mode will output isp_multictx_frame_req, we should start transmit when isp_multictx_frame_req.But we can use this register instant of isp_multictx_frame_req when mult_camera_req_sf_en = 1
6	RW	0x0	isp_mult_frame_req_en 0.no check isp_multictx_frame_req value when start new frame trans 1.check isp_multictx_frame_req value when start new frame trans
5	RW	0x0	frame_continue disable continue mode,should set start_en each frame 1 enable continue mode,will auto start the next frame transmit

Table 7-466 MIPI_ADAPT_ALIG_CNTL9 0x49

Bit(s)	R/W	Default	Description
31	RW	0x0	frame_sync_dely_en Can use frame_sync from frontend after delay some cycles of vclk 0 Frame_sync delay disable 1 Frame_sync delay enable
30:16	RW	0x0	frame_sync_dely_time Frame_sync delay time,N x vclk cycles,valid when frame_sync_dely_en = 1
15:0	RW	0x0	generate irq in configure number of line start

Amlogic Proprietary and Confidential
Copyright © Amlogic. All rights reserved.

Table 7-467 MIPI_ADAPT_ALIG_CNTL10 0x4a

Bit(s)	R/W	Default	Description
31:24	RW	0x0	isp_hold_src_en bit30:md2 hold cke enable bit29:flicker hold cke enable bit28:md hold cke enable bit27:ds2 hold cke enable bit26:ds1 hold cke enable bit25:ds0 hold cke enable bit24:crop_mif hold cke enable
18:16	RW	0x0	frame_vs_sel Alignment will send out a frame_vs single to top for sync. frame_vs select 0 frame_sync_tm = frame_sync_dely_en ? frame_syunc_dly : frame_sync 1 frame_vs_p,trans start,vcnt ==0 and hcnt == 0 2 frame_sync,input from fe_mux 4 frame_vs_cke_dly,output vvalid_pos with cke delay 6 frame_start_irq_set,vvalid_pos other frame_end
14:0	RW	0x0	frame_vs_cke_delay Frame_vs delay time when cke valid,N x vclk cycles,valid when frame_vs_sel = 4

Table 7-468 MIPI_ADAPT_ALIG_CNTL11 0x4b

frame_vs single for crop_mif

Bit(s)	R/W	Default	Description
18:16	RW	0x0	frame_vs_sel Alignment will send out a frame_vs single to motion detect for sync. frame_vs to swrmif select 0 frame_sync_tm = frame_sync_dely_en ? frame_syunc_dly : frame_sync 1 frame_vs_p,trans start,vcnt ==0 and hcnt == 0 2 frame_sync,input from fe_mux 4 frame_vs_cke_dly,output vvalid_pos with cke delay other frame_end
14:0	RW	0x0	frame_vs_cke_delay Frame_vs delay time when cke valid,N x vclk cycles,valid when frame_vs_sel = 4

MIPI_ADAPT_ALIG_CNTL12 0x4c frame_vs single for ds0 , same as MIPI_ADAPT_ALIG_CNTL11; MIPI_ADAPT_ALIG_CNTL13 0x4d frame_vs single for ds1 , same as MIPI_ADAPT_ALIG_CNTL11; MIPI_ADAPT_ALIG_CNTL14 0x4e frame_vs single for ds2, same as MIPI_ADAPT_ALIG_CNTL11; MIPI_ADAPT_ALIG_CNTL15 0x4f frame_vs single for md , same as MIPI_ADAPT_ALIG_CNTL11; MIPI_ADAPT_ALIG_CNTL16 0x50 frame_vs single for flicker , same as MIPI_ADAPT_ALIG_CNTL11; MIPI_ADAPT_ALIG_CNTL17 0x51 frame_vs single for md2 , same as MIPI_ADAPT_ALIG_CNTL11; MIPI_ADAPT_ALIG_CNTL18 0x52 frame_vs single for tnr_de_wr , same as MIPI_ADAPT_ALIG_CNTL11; MIPI_ADAPT_ALIG_CNTL19 0x53 frame_vs single for tnr_de_rd , same as MIPI_ADAPT_ALIG_CNTL11

Table 7-469 MIPI_ADAPT_ALIG_ST0 0x5a

Bit(s)	R/W	Default	Description
31	R	0x0	frame_end_d_hold
30	R	0x0	trans_start_d
29	R	0x0	pixel_inc_mask

Amlogic Proprietary and Confidential
Copyright © Amlogic. All rights reserved.

Bit(s)	R/W	Default	Description
28	R	0x0	line_inc_mask
27:20	R	0x0	isp_hold_src_v
19	R	0x0	trans_en
18	R	0x0	isp_multictx_frame_req
17	R	0x0	isp_hold_v
16:4	R	0x0	flow_done_src_hold
2	R	0x0	cke_d
1	R	0x0	hvalid_p
0	R	0x0	vvalid_p

Table 7-470 MIPI_ADAPT_ALIG_ST1 0x5b

Bit(s)	R/W	Default	Description
31:16	R	0x0	h_cnt
15:0	R	0x0	v_cnt

Table 7-471 MIPI_ADAPT_ALIG_ST2 0x5c

Bit(s)	R/W	Default	Description
24:16	R	0x0	frame_vs_dst_dly_exc
15:0	R	0x0	dir_frame_cnt

Table 7-472 MIPI_ADAPT_FE_MUX_CTRL0 0x90

Bit(s)	R/W	Default	Description
29:28	RW	0x0	alig_frame_vs : frame_valid_sel 2'b11 : pixel_0_ack | pixel_1_ack 2'b10 : pixel_1_ack 2'b01 : pixel_0_ack 2'b00 : 0
27:24	RW	0x0	alig_frame_vs : frame_vs_in_sel 0:fe0 isp path vs 1:fe1 isp path vs 2:fe2 isp path vs 3:fe3 isp path vs 4:fe0 mem path vs 5:fe1 mem path vs 6:fe2 mem path vs 7:fe3 mem path vs 8:ddr_rd0_lbuf_soft_rst 9:ddr_rd1_lbuf_soft_rst other:0
23:20	RW	0x0	pixel1_frame_vs: frame_vs_in_sel 0:fe0 isp path vs 1:fe1 isp path vs

Amlogic Proprietary and Confidential
Copyright © Amlogic. All rights reserved.

Bit(s)	R/W	Default	Description
			2:fe2 isp path vs 3:fe3 isp path vs 4:fe0 mem path vs 5:fe1 mem path vs 6:fe2 mem path vs 7:fe3 mem path vs 8:ddr_rd1_lbuf_soft_rst other:0
19:16	RW	0x0	pixel0_frame_vs: frame_vs_in_sel 0:fe0 isp path vs 1:fe1 isp path vs 2:fe2 isp path vs 3:fe3 isp path vs 4:fe0 mem path vs 5:fe1 mem path vs 6:fe2 mem path vs 7:fe3 mem path vs 8:ddr_rd0_lbuf_soft_rst other:0
14	RW	0x0	ddr_rd1_line_wr_vs_sel 1:from fe isp path 0:from fe mem path
13	RW	0x0	ddr_rd1_frame_wr_done_sel 1:from fe isp path 0:from fe mem path
12	RW	0x0	ddr_rd1_line_wr_done_sel 1:from fe isp path 0:from fe mem path
9:8	RW	0x0	ddr_rd1_fe_single_sel 0:fe0 1:fe1 2:fe2 3:fe3
6	RW	0x0	ddr_rd0_line_wr_vs_sel 1:from fe isp path 0:from fe mem path
5	RW	0x0	ddr_rd0_frame_wr_done_sel 1:from fe isp path 0:from fe mem path
4	RW	0x0	ddr_rd0_line_wr_done_sel 1:from fe isp path 0:from fe mem path
1:0	RW	0x0	ddr_rd0_fe_single_sel 0:fe0 1:fe1 2:fe2 3:fe3

Amlogic Proprietary and Confidential
Copyright © Amlogic. All rights reserved.

Table 7-473 MIPI_ADAPT_FE_MUX_CTRL1 0x91

Bit(s)	R/W	Default	Description
29:28	RW	0x0	lbuf1_frame_vs : frame_vs_in_sel 0:fe0 isp path vs 1:fe1 isp path vs 2:fe2 isp path vs 3:fe3 isp path vs 4:fe0 mem path vs 5:fe1 mem path vs 6:fe2 mem path vs 7:fe3 mem path vs 8:ddr_rd1_lbuf_soft_rst other:0
23:20	RW	0x0	lbuf0_frame_vs : frame_vs_in_sel 0:fe0 isp path vs 1:fe1 isp path vs 2:fe2 isp path vs 3:fe3 isp path vs 4:fe0 mem path vs 5:fe1 mem path vs 6:fe2 mem path vs 7:fe3 mem path vs 8:ddr_rd0_lbuf_soft_rst other:0
16	RW	0x0	adapt_de_rd_frame_vs□ frame_valid_sel 1:ddr_rd1 0:ddr_rd0
15:12	RW	0x0	adpat_de_rd_frame_vs: frame_vs_in_sel 0:fe0 isp path vs 1:fe1 isp path vs 2:fe2 isp path vs 3:fe3 isp path vs 4:fe0 mem path vs 5:fe1 mem path vs 6:fe2 mem path vs 7:fe3 mem path vs 8:ddr_rd0_rd_start 0:ddr_rd1_rd_start other:0
11:8	RW	0x0	adpat_de_wr_frame_vs: frame_vs_in_sel 0:fe0 isp path vs 1:fe1 isp path vs 2:fe2 isp path vs 3:fe3 isp path vs 4:fe0 mem path vs 5:fe1 mem path vs 6:fe2 mem path vs 7:fe3 mem path vs other:0

Amlogic Proprietary and Confidential
Copyright © Amlogic. All rights reserved.

Bit(s)	R/W	Default	Description
7:4	RW	0x0	adpat_ds_noblock_frame_vs: frame_vs_in_sel 0:fe0 isp path vs 1:fe1 isp path vs 2:fe2 isp path vs 3:fe3 isp path vs 4:fe0 mem path vs 5:fe1 mem path vs 6:fe2 mem path vs 7:fe3 mem path vs other:0
3:0	RW	0x0	adpat_fr_noblock_frame_vs: frame_vs_in_sel 0:fe0 isp path vs 1:fe1 isp path vs 2:fe2 isp path vs 3:fe3 isp path vs 4:fe0 mem path vs 5:fe1 mem path vs 6:fe2 mem path vs 7:fe3 mem path vs other:0

Table 7-474 MIPI_ADAPT_FE_MUX_CTRL2 0xbe

Bit(s)	R/W	Default	Description
31:30	RW	0x0	frame_vs single for ds0 frame_vs_in_sel 0:0 1:isp_core_inf select bit pos 2:isp_core_inf select bit neg 3:alig_frame_vs select in MIPI_ADAPT_ALIG_CNTL12
29:24	RW	0x0	frame_vs single for ds0 isp_core_inf_sel select 1 bit info from isp_core as frame_vs source
23:20	RW	0x0	frame_vs single for crop_mif frame_vs_in_sel 0:0 1:isp_core_inf select bit pos 2:isp_core_inf select bit neg 3:alig_frame_vs select in MIPI_ADAPT_ALIG_CNTL11
19:16	RW	0x0	frame_vs single for crop_mif isp_core_inf_sel select 1 bit info from isp_core as frame_vs source
8	RW	0x0	isp_core_inf invert

Amlogic Proprietary and Confidential
Copyright © Amlogic. All rights reserved.

Bit(s)	R/W	Default	Description
7:4	RW	0x0	frame_vs_1 for vlock: frame_vs_in_sel 0:fe0 isp path vs 1:fe1 isp path vs 2:fe2 isp path vs 3:fe3 isp path vs 4:fe0 mem path vs 5:fe1 mem path vs 6:fe2 mem path vs 7:fe3 mem path vs 8:alig_frame_vs select in MIPI_ADAPT_ALIG_CNTL10 other:0
3:0	RW	0x0	frame_vs_0 for vlock: frame_vs_in_sel 0:fe0 isp path vs 1:fe1 isp path vs 2:fe2 isp path vs 3:fe3 isp path vs 4:fe0 mem path vs 5:fe1 mem path vs 6:fe2 mem path vs 7:fe3 mem path vs 8:alig_frame_vs select in MIPI_ADAPT_ALIG_CNTL10 other:0

Table 7-475 MIPI_ADAPT_FE_MUX_CTRL3 0xbf

Bit(s)	R/W	Default	Description
31:30	RW	0x0	frame_vs single for flicker frame_vs_in_sel 0:0 1:isp_core_inf select bit pos 2:isp_core_inf select bit neg 3:alig_frame_vs select in MIPI_ADAPT_ALIG_CNTL16
29:24	RW	0x0	frame_vs single for flicker isp_core_inf_sel select 1 bit info from isp_core as frame_vs source
23:20	RW	0x0	frame_vs single for md frame_vs_in_sel 0:0 1:isp_core_inf select bit pos 2:isp_core_inf select bit neg 3:alig_frame_vs select in MIPI_ADAPT_ALIG_CNTL15
19:16	RW	0x0	frame_vs single for md isp_core_inf_sel select 1 bit info from isp_core as frame_vs source
15:14	RW	0x0	frame_vs single for ds2 frame_vs_in_sel 0:0 1:isp_core_inf select bit pos 2:isp_core_inf select bit neg 3:alig_frame_vs select in MIPI_ADAPT_ALIG_CNTL14
13:8	RW	0x0	frame_vs single for ds2 isp_core_inf_sel select 1 bit info from isp_core as frame_vs source

Amlogic Proprietary and Confidential
Copyright © Amlogic. All rights reserved.

Bit(s)	R/W	Default	Description
7:6	RW	0x0	frame_vs single for ds1 frame_vs_in_sel 0:0 1:isp_core_inf select bit pos 2:isp_core_inf select bit neg 3:alig_frame_vs select in MIPI_ADAPT_ALIG_CNTL13
5:0	RW	0x0	frame_vs single for ds1 isp_core_inf_sel select 1 bit info from isp_core as frame_vs source

Table 7-476 MIPI_ADAPT_FE_MUX_CTRL4 0xc0

Bit(s)	R/W	Default	Description
31	RW	0x0	isp_core_inf_sel for isp_core_flow_hold 0:isp_core_inf select bit pos 1:isp_core_inf select bit neg
29:24	RW	0x0	isp_core_inf_sel for isp_core_flow_hold select 1 bit info from isp_core as isp_core flow_hold to alig module
23:20	RW	0x0	frame_vs single for tnr_de_rd frame_vs_in_sel 0:0 1:isp_core_inf select bit pos 2:isp_core_inf select bit neg 3:alig_frame_vs select in MIPI_ADAPT_ALIG_CNTL19
19:16	RW	0x0	frame_vs single for tnr_de_rd isp_core_inf_sel select 1 bit info from isp_core as frame_vs source
15:14	RW	0x0	frame_vs single for tnr_de_wr frame_vs_in_sel 0:0 1:isp_core_inf select bit pos 2:isp_core_inf select bit neg 3:alig_frame_vs select in MIPI_ADAPT_ALIG_CNTL18
13:8	RW	0x0	frame_vs single for tnr_de_wr isp_core_inf_sel select 1 bit info from isp_core as frame_vs source
7:6	RW	0x0	frame_vs single for md2 frame_vs_in_sel 0:0 1:isp_core_inf select bit pos 2:isp_core_inf select bit neg 3:alig_frame_vs select in MIPI_ADAPT_ALIG_CNTL17
5:0	RW	0x0	frame_vs single for md2 isp_core_inf_sel select 1 bit info from isp_core as frame_vs source

Table 7-477 MIPI_ADAPT_FE_MUX_CTRL5 0xc1

Bit(s)	R/W	Default	Description
31:0	RW	0x0	tnr_wr_fail_mask[31:0],use 43 bit isp_core_info as isp wr fail flag,set mask to enable each bit

Amlogic Proprietary and Confidential
Copyright © Amlogic. All rights reserved.

Table 7-478 MIPI_ADAPT_FE_MUX_CTRL6 0xc2

Bit(s)	R/W	Default	Description
31	RW	0x0	tnr_wr_fail_enable
30	RW	0x0	tnr_wr_fail_sel: 0:neg 1:pos
10:0	RW	0x0	tnr_wr_fail_mask[42:32],use 43 bit isp_core_info as isp wr fail flag,set mask to enable each bit

Table 7-479 MIPI_ADAPT_FE_MUX_CTRL7 0xc3

Bit(s)	R/W	Default	Description
31:0	RW	0x0	tnr_rdr_fail_mask[31:0],use 43 bit isp_core_info as isp rd fail flag,set mask to enable each bit

Table 7-480 MIPI_ADAPT_FE_MUX_CTRL8 0xc4

Bit(s)	R/W	Default	Description
31	RW	0x0	tnr_rdr_fail_enable
30	RW	0x0	tnr_rd_fail_sel: 0:neg 1:pos
10:0	RW	0x0	tnr_rd_fail_mask[42:32],use 43 bit isp_core_info as isp rd fail flag,set mask to enable each bit

Table 7-481 MIPI_ADAPT_FE_MUX_CTRL9 0xc5

Bit(s)	R/W	Default	Description
21:2	RW	0x0	vsync_sel
1:0	RW	0x0	Hsync_sel

Table 7-482 MIPI_ADAPT_FE_MUX_CTRL10 0xc6

Bit(s)	R/W	Default	Description
15:0	RW	0x0	Vfifo_vs_sel

Table 7-483 MIPI_ADAPT_FE_MUX_CTRL11 0xc7

Bit(s)	R/W	Default	Description
31:0	RW	0x0	Csi_vsync_dly_cntl[0]

Table 7-484 MIPI_ADAPT_FE_MUX_CTRL12 0xc8

Bit(s)	R/W	Default	Description
31:0	RW	0x0	Csi_vsync_dly_cntl[1]

Amlogic Proprietary and Confidential
Copyright © Amlogic. All rights reserved.

Table 7-485 MIPI_ADAPT_FE_MUX_CTRL13 0xc9

Bit(s)	R/W	Default	Description
31:0	RW	0x0	Csi_vsync_dly_cntl[2]

Table 7-486 MIPI_ADAPT_FE_MUX_CTRL14 0xca

Bit(s)	R/W	Default	Description
31:0	RW	0x0	Csi_vsync_dly_cntl[3]

Table 7-487 MIPI_ADAPT_FE_MUX_CTRL15 0xcb

Bit(s)	R/W	Default	Description
31:0	RW	0x0	Csi_hsync_vs_dly_cntl

Table 7-488 MIPI_ADAPT_FE_MUX_CTRL16 0xcc

Bit(s)	R/W	Default	Description
31:0	RW	0x0	Csi_vfifo_vs_dly_cntl

Table 7-489 MIPI_ADAPT_FE_MUX_CTRL17 0xd3

Bit(s)	R/W	Default	Description
7:6	RW	0x3	Fe3 sel source host0~3
5:4	RW	0x2	Fe2 sel source host0~3
3:2	RW	0x1	Fe1 sel source host0~3
1:0	RW	0x0	Fe0 sel source host0~3

Table 7-490 MIPI_ADAPT_FE_MUX0_DLY_CNTRL0 0x92

frame_vs for ddr_rd0 isp path delay and monitor

Bit(s)	R/W	Default	Description
31	RW	0x0	soft_rst
29	RW	0x0	monitor clear
28	RW	0x0	monitor enable
27	RW	0x0	vs_delay exceed one frame flag clear
19	RW	0x0	vs_delay enable
17:16	RW	0x0	vs_delay tick select: 0:vclk 1:xtal3 2:1us 3:10us
14:0	RW	0x0	vs_delay count

Amlogic Proprietary and Confidential
Copyright © Amlogic. All rights reserved.

Table 7-491 MIPI_ADAPT_FE_MUX0_DLY_STAT0 0x93

Bit(s)	R/W	Default	Description
31	R	0x0	vs_delay exceed one frame flag
30:16	R	0x0	vs_monitor max value
14:0	R	0x0	vs_monitor min value

MIPI_ADAPT_FE_MUX1_DLY_CNTRL0 0x94

frame_vs for ddr_rd1 isp path delay and monitor, same as MIPI_ADAPT_FE_MUX0_DLY_CNTRL0

MIPI_ADAPT_FE_MUX1_DLY_STAT0 0x95

frame_vs for ddr_rd1 isp path delay and monitor, same as MIPI_ADAPT_FE_MUX0_DLY_STAT0

MIPI_ADAPT_FE_MUX2_DLY_CNTRL0 0x96

frame_vs for pixel0 delay and monitor, same as MIPI_ADAPT_FE_MUX0_DLY_CNTRL0

MIPI_ADAPT_FE_MUX2_DLY_STAT0 0x97

frame_vs for pixel0 delay and monitor, same as MIPI_ADAPT_FE_MUX0_DLY_STAT0

MIPI_ADAPT_FE_MUX3_DLY_CNTRL0 0x98

frame_vs for pixel1 delay and monitor, same as MIPI_ADAPT_FE_MUX0_DLY_CNTRL0

MIPI_ADAPT_FE_MUX3_DLY_STAT0 0x99

frame_vs for pixel1 delay and monitor, same as MIPI_ADAPT_FE_MUX0_DLY_STAT0

MIPI_ADAPT_FE_MUX4_DLY_CNTRL0 0x9a

frame_vs for alig delay and monitor, same as MIPI_ADAPT_FE_MUX0_DLY_CNTRL0

MIPI_ADAPT_FE_MUX4_DLY_STAT0 0x9b

frame_vs for alig delay and monitor, same as MIPI_ADAPT_FE_MUX0_DLY_STAT0

MIPI_ADAPT_FE_MUX5_DLY_CNTRL0 0x9c

frame_vs for fr_noblock delay and monitor, same as MIPI_ADAPT_FE_MUX0_DLY_CNTRL0

MIPI_ADAPT_FE_MUX5_DLY_STAT0 0x9d

frame_vs for fr_noblock delay and monitor, same as MIPI_ADAPT_FE_MUX0_DLY_STAT0

MIPI_ADAPT_FE_MUX6_DLY_CNTRL0 0x9e

frame_vs for ds_noblock delay and monitor, same as MIPI_ADAPT_FE_MUX0_DLY_CNTRL0

MIPI_ADAPT_FE_MUX6_DLY_STAT0 0x9f

frame_vs for ds_noblock delay and monitor, same as MIPI_ADAPT_FE_MUX0_DLY_STAT0

MIPI_ADAPT_FE_MUX7_DLY_CNTRL0 0xa0

frame_vs for adapt_de_wr delay and monitor, same as MIPI_ADAPT_FE_MUX0_DLY_CNTRL0

MIPI_ADAPT_FE_MUX7_DLY_STAT0 0xa1

frame_vs for adapt_de_wr delay and monitor, same as MIPI_ADAPT_FE_MUX0_DLY_STAT0

MIPI_ADAPT_FE_MUX8_DLY_CNTRL0 0xa2

frame_vs for adapt_de_rd delay and monitor, same as MIPI_ADAPT_FE_MUX0_DLY_CNTRL0

MIPI_ADAPT_FE_MUX8_DLY_STAT0 0xa3

frame_vs for adapt_de_rd delay and monitor, same as MIPI_ADAPT_FE_MUX0_DLY_STAT0

Amlogic Proprietary and Confidential
Copyright © Amlogic. All rights reserved.

MIPI_ADAPT_FE_MUX9_DLY_CNTRL0 0xa4

frame_vs for lbuf0 delay and monitor, same as MIPI_ADAPT_FE_MUX0_DLY_CNTRL0

MIPI_ADAPT_FE_MUX9_DLY_STAT0 0xa5

frame_vs for lbuf0 delay and monitor, same as MIPI_ADAPT_FE_MUX0_DLY_STAT0

MIPI_ADAPT_FE_MUX10_DLY_CNTRL0 0xa6

frame_vs for lbuf1 delay and monitor, same as MIPI_ADAPT_FE_MUX0_DLY_CNTRL0

MIPI_ADAPT_FE_MUX10_DLY_STAT0 0xa7

frame_vs for lbuf1 delay and monitor, same as MIPI_ADAPT_FE_MUX0_DLY_STAT0

MIPI_ADAPT_FE_MUX11_DLY_CNTRL0 0xba

frame_vs for ddr_rd0 mem path delay and monitor, same as MIPI_ADAPT_FE_MUX0_DLY_CNTRL0

MIPI_ADAPT_FE_MUX11_DLY_STAT0 0xbb

frame_vs for ddr_rd0 mem path delay and monitor, same as MIPI_ADAPT_FE_MUX0_DLY_STAT0

MIPI_ADAPT_FE_MUX12_DLY_CNTRL0 0xbc

frame_vs for ddr_rd1 mem path delay and monitor, same as MIPI_ADAPT_FE_MUX0_DLY_CNTRL0

MIPI_ADAPT_FE_MUX12_DLY_STAT0 0xbd

frame_vs for ddr_rd1 mem path delay and monitor, same as MIPI_ADAPT_FE_MUX0_DLY_STAT0

MIPI_ADAPT_DST_VS_0_DLY_CNTRL0 0xa8

frame_vs for crop_mif delay and monitor, same as MIPI_ADAPT_FE_MUX0_DLY_CNTRL0

MIPI_ADAPT_DST_VS_0_DLY_STAT0 0xa9

frame_vs for crop_mif delay and monitor, same as MIPI_ADAPT_FE_MUX0_DLY_STAT0

MIPI_ADAPT_DST_VS_1_DLY_CNTRL0 0xaa

frame_vs for ds0 delay and monitor, same as MIPI_ADAPT_FE_MUX0_DLY_CNTRL0

MIPI_ADAPT_DST_VS_1_DLY_STAT0 0xab

frame_vs for ds0 delay and monitor, same as MIPI_ADAPT_FE_MUX0_DLY_STAT0

MIPI_ADAPT_DST_VS_2_DLY_CNTRL0 0xac

frame_vs for ds1 delay and monitor, same as MIPI_ADAPT_FE_MUX0_DLY_CNTRL0

MIPI_ADAPT_DST_VS_2_DLY_STAT0 0xad

frame_vs for ds1 delay and monitor, same as MIPI_ADAPT_FE_MUX0_DLY_STAT0

MIPI_ADAPT_DST_VS_3_DLY_CNTRL0 0xae

frame_vs for ds2 delay and monitor, same as MIPI_ADAPT_FE_MUX0_DLY_CNTRL0

MIPI_ADAPT_DST_VS_3_DLY_STAT0 0xaf

frame_vs for ds2 delay and monitor, same as MIPI_ADAPT_FE_MUX0_DLY_STAT0

MIPI_ADAPT_DST_VS_4_DLY_CNTRL0 0xb0

frame_vs for md delay and monitor, same as MIPI_ADAPT_FE_MUX0_DLY_CNTRL0

MIPI_ADAPT_DST_VS_4_DLY_STAT0 0xb1

frame_vs for md delay and monitor, same as MIPI_ADAPT_FE_MUX0_DLY_STAT0

MIPI_ADAPT_DST_VS_5_DLY_CNTRL0 0xb2

frame_vs for flicker delay and monitor, same as MIPI_ADAPT_FE_MUX0_DLY_CNTRL0

Amlogic Proprietary and Confidential
Copyright © Amlogic. All rights reserved.

MIPI_ADAPT_DST_VS_5_DLY_STAT0 0xb3

frame_vs for flicker delay and monitor, same as MIPI_ADAPT_FE_MUX0_DLY_STAT0

MIPI_ADAPT_DST_VS_6_DLY_CNTRL0 0xb4

frame_vs for md2 delay and monitor, same as MIPI_ADAPT_FE_MUX0_DLY_CNTRL0

MIPI_ADAPT_DST_VS_6_DLY_STAT0 0xb5

frame_vs for md2 delay and monitor, same as MIPI_ADAPT_FE_MUX0_DLY_STAT0

MIPI_ADAPT_DST_VS_7_DLY_CNTRL0 0xb6

frame_vs for tnr_de_wr delay and monitor, same as MIPI_ADAPT_FE_MUX0_DLY_CNTRL0

MIPI_ADAPT_DST_VS_7_DLY_STAT0 0xb7

frame_vs for tnr_de_wr delay and monitor, same as MIPI_ADAPT_FE_MUX0_DLY_STAT0

MIPI_ADAPT_DST_VS_8_DLY_CNTRL0 0xb8

frame_vs for tnr_de_rd delay and monitor, same as MIPI_ADAPT_FE_MUX0_DLY_CNTRL0

MIPI_ADAPT_DST_VS_8_DLY_STAT0 0xb9

frame_vs for tnr_de_rd delay and monitor, same as MIPI_ADAPT_FE_MUX0_DLY_STAT0

MPI_ISP_AHB_DMA

Table 7-492 ISP_DMA_BUS_CTL0 0x00

Bit(s)	R/W	Default	Description
21	R/W	0	reg_axi_arugt
20	R/W	0	reg_axi_awugt
15:8	R/W	0	reg_axi_id
1:0	R/W	0	reg_axi_burst_type: 00 single 01 INC2 10 inc4 11 inc8

Table 7-493 ISP_DMA_CTL 0x01

Bit(s)	R/W	Default	Description
31	R/W	0	reg_dma_start,auto clear
30	R/W	0	reg_soft_rst
29	R/W	0	reg_fifo_rst
28	R/W	0	reg_fifo_noclk_gate
27	R/W	0	reg_dma_all_done_clr
26	R/W	0	reg_ahb_resp_err_clr
23:16	R/W	0	reg_dma_done_clr
15:8	R/W	0	reg_dma_done_en
7	R/W	0	reg_dma_all_done_en
6	R/W	0	reg_ahb_resp_err_en

Amlogic Proprietary and Confidential
Copyright © Amlogic. All rights reserved.

Bit(s)	R/W	Default	Description
4	R/W	0	reg_isp_dma_en
2:0	R/W	0	reg_task_num

Table 7-494 ISP_DMA_SRC_ADDR0 0x02

Bit(s)	R/W	Default	Description
31:0	R/W	0	reg_src_addr

Table 7-495 ISP_DMA_DST_ADDR0 0x03

Bit(s)	R/W	Default	Description
31:0	R/W	0	reg_dst_addr

Table 7-496 ISP_DMA_CTL_TASK0 0x04

Bit(s)	R/W	Default	Description
31	R/W	0	reg_dma_dir 1:ddr to ISP 0:ISP to ddr
15:0	R/W	0	reg_dma_len,(N-1)xword

ISP_DMA_SRC_ADDR1 0x05

same as ISP_DMA_SRC_ADDR0

ISP_DMA_DST_ADDR1 0x06

same as ISP_DMA_DST_ADDR0

ISP_DMA_CTL_TASK1 0x07

same as ISP_DMA_CTL_ADDR0

ISP_DMA_SRC_ADDR2 0x08

same as ISP_DMA_SRC_ADDR0

ISP_DMA_DST_ADDR2 0x09

same as ISP_DMA_DST_ADDR0

ISP_DMA_CTL_TASK2 0x0a

same as ISP_DMA_CTL_ADDR0

ISP_DMA_SRC_ADDR3 0x0b

same as ISP_DMA_SRC_ADDR0

ISP_DMA_DST_ADDR3 0x0c

same as ISP_DMA_DST_ADDR0

ISP_DMA_CTL_TASK3 0x0d

same as ISP_DMA_CTL_ADDR0

ISP_DMA_SRC_ADDR4 0x0e

Amlogic Proprietary and Confidential
Copyright © Amlogic. All rights reserved.

same as ISP_DMA_SRC_ADDR0
ISP_DMA_DST_ADDR4 0x0f
same as ISP_DMA_DST_ADDR0
ISP_DMA_CTL_TASK4 0x10
same as ISP_DMA_CTL_ADDR0
ISP_DMA_SRC_ADDR5 0x11
same as ISP_DMA_SRC_ADDR0
ISP_DMA_DST_ADDR5 0x12
same as ISP_DMA_DST_ADDR0
ISP_DMA_CTL_TASK5 0x13
same as ISP_DMA_CTL_ADDR0
ISP_DMA_SRC_ADDR6 0x14
same as ISP_DMA_SRC_ADDR0
ISP_DMA_DST_ADDR6 0x15
same as ISP_DMA_DST_ADDR0
ISP_DMA_CTL_TASK6 0x16
same as ISP_DMA_CTL_ADDR0
ISP_DMA_SRC_ADDR7 0x17
same as ISP_DMA_SRC_ADDR0
ISP_DMA_DST_ADDR7 0x18
same as ISP_DMA_DST_ADDR0
ISP_DMA_CTL_TASK7 0x19
same as ISP_DMA_CTL_ADDR0

Table 7-497 ISP_DMA_ST0 0x1a

Bit(s)	R/W	Default	Description
31:0	RO	0	reg_axi_waddr

Table 7-498 ISP_DMA_ST1 0x1b

Bit(s)	R/W	Default	Description
31:0	RO	0	reg_axi_raddr

Table 7-499 ISP_DMA_ST2 0x1c

Bit(s)	R/W	Default	Description
31:0	RO	0	reg_ahb_raddr

Amlogic Proprietary and Confidential
Copyright © Amlogic. All rights reserved.

Table 7-500 ISP_DMA_ST3 0x1d

Bit(s)	R/W	Default	Description
23:16	RO	0	r_dma_done
15	RO	0	r_dma_all_done
14	RO	0	r_ahb_resp_err
12:8	RO	0	c_fifo_count
64:4	RO	0	r_task_cnt
2:0	RO	0	r_task_num

Table 7-501 ISP_DMA_ST4 0x1e

Bit(s)	R/W	Default	Description
31:16	RO	0	r_ahb_cmd_num
15:0	RO	0	r_axi_cmd_num

Table 7-502 ISP_DMA_ST5 0x1f

Bit(s)	R/W	Default	Description
29:24	RO	0	r_axi_wcmd_cnt
23:20	RO	0	c_axi_wdata_len
19:16	RO	0	r_axi_wdata_cnt
15:0	RO	0	r_axi_wdata_num

Table 7-503 ISP_DMA_ST6 0x20

Bit(s)	R/W	Default	Description
31:29	RO	0	r_ahb_fifo_rdat_valid
28:27	RO	0	r_ahb_rdata_valid_flag
26:21	RO	0	r_axi_wrsp_cnt
20:16	RO	0	r_axi_wr_fifo_vcount
15:0	RO	0	r_axi_rdata_cnt

Table 7-504 ISP_DMA_PENDING 0x23

Bit(s)	R/W	Default	Description
11	R/W	0	task7 done pending
10	R/W	0	task6 done pending
9	R/W	0	task5 done pending
8	R/W	0	task4 done pending
7	R/W	0	task3 done pending

Amlogic Proprietary and Confidential
Copyright © Amlogic. All rights reserved.

Bit(s)	R/W	Default	Description
6	R/W	0	task2 done pending
5	R/W	0	task1 done pending
4	R/W	0	task0 done pending
1	R/W	0	ahb resp err pending
0	R/W	0	all task done pending

Table 7-505 ISP_DMA_IRQ_MASK 0x24

Bit(s)	R/W	Default	Description
11	R/W	0	task7 done pending mask
10	R/W	0	task6 done pending mask
9	R/W	0	task5 done pending mask
8	R/W	0	task4 done pending mask
7	R/W	0	task3 done pending mask
6	R/W	0	task2 done pending mask
5	R/W	0	task1 done pending mask
4	R/W	0	task0 done pending mask
1	R/W	0	ahb resp err pending mask
0	R/W	0	all task done pending mask

MPI_ISP_APB_DMA

Table 7-506 ISP_DMA_AXI_CTL 0x00

Bit(s)	R/W	Default	Description
21	R/W	0	reg_axi_arugt
20	R/W	0	reg_axi_awugt
12:8	R/W	0	reg_axi_id
3:2	R/W	0	reg_axi_wr_burst_type: 00 single 01 INC2 10 inc4 11 inc8
1:0	R/W	0	reg_axi_rd_burst_type: 00 single 01 INC2 10 inc4 11 inc8

Amlogic Proprietary and Confidential
Copyright © Amlogic. All rights reserved.

Table 7-507 ISP_DMA_CTL0 0x01

Bit(s)	R/W	Default	Description
31	R/W	0	apb_dma_enable
27	R/W	0	reg_soft_rst
26	R/W	0	reg_trig_fifo_rst
25	R/W	0	reg_axi_rfifo_rst
26	R/W	0	reg_axi_wfifo_rst
18:16	R/W	0	reg_trig_fifo_stat_sel,for trig_fifo_stat read value select

Table 7-508 ISP_DMA_PENDING0 0x02

Bit(s)	R/W	Default	Description
31:0	R/W	0	apb_dma pending[31:0],write 1 to clear

Table 7-509 ISP_DMA_PENDING1 0x03

Bit(s)	R/W	Default	Description
31:0	R/W	0	apb_dma pending[63:32],write 1 to clear

Table 7-510 ISP_DMA_IRQ_MASK0 0x04

Bit(s)	R/W	Default	Description
31:0	R/W	0	apb_dma pending[31:0] enable,write 1 to enable each pending bit

Table 7-511 ISP_DMA_IRQ_MASK1 0x05

Bit(s)	R/W	Default	Description
bit	irq source	bit	irq source
31:0	R/W	0	apb_dma pending[63:32] enable,write 1 to enable each pending bit

Bit	irq Source	Bit	irq Source
63	NA	31	src15_trig_overflow
62	NA	30	src14_trig_overflow
61	NA	29	src13_trig_overflow
60	NA	28	src12_trig_overflow
59	NA	27	src11_trig_overflow
58	NA	26	src10_trig_overflow
57	NA	25	src9_trig_overflow
56	NA	24	src8_trig_overflow

Amlogic Proprietary and Confidential
Copyright © Amlogic. All rights reserved.

Bit	irq Source	Bit	irq Source
55	NA	23	src7_trig_overflow
54	NA	22	src6_trig_overflow
53	NA	21	src5_trig_overflow
52	NA	20	src4_trig_overflow
51	NA	19	src3_trig_overflow
50	NA	18	src2_trig_overflow
49	bus_mon_fast_irq	17	src1_trig_overflow
48	trig_fifo_overflow	16	src0_trig_overflow
47	src15_task_done without valid task	15	src15 task done
46	src14_task_done without valid task	14	src14 task done
45	src13_task_done without valid task	13	src13 task done
44	src12_task_done without valid task	12	src12 task done
43	src11_task_done without valid task	11	src11 task done
42	src10_task_done without valid task	10	src10 task done
41	src9_task_done without valid task	9	src9 task done
40	src8_task_done without valid task	8	src8 task done
39	src7_task_done without valid task	7	src7 task done
38	src6_task_done without valid task	6	src6 task done
37	src5_task_done without valid task	5	src5 task done
36	src4_task_done without valid task	4	src4 task done
35	src3_task_done without valid task	3	src3 task done
34	src2_task_done without valid task	2	src2 task done
33	src1_task_done without valid task	1	src1 task done
32	src0_task_done without valid task	0	src0 task done

Table 7-512 ISP_DMA_ARBIT_CNTL0 0x20

Bit(s)	R/W	Default	Description
3:0	R/W	0	apb arbiter :bus_monitor_cntl

Table 7-513 ISP_DMA_ARBIT_CNTL1 0x21

Bit(s)	R/W	Default	Description
31:0	R/W	0	apb arbiter :bus_monitor_addr

Amlogic Proprietary and Confidential
Copyright © Amlogic. All rights reserved.

Table 7-514 ISP_DMA_ARBIT_CNTL2 0x22

Bit(s)	R/W	Default	Description
31:0	R/W	0	apb arbiter :bus_monitor_data

Table 7-515 ISP_DMA_ARBIT_CNTL3 0x23

Bit(s)	R/W	Default	Description
31:0	R/W	0	apb arbiter :bus_monitor_data_msk

Table 7-516 ISP_DMA_SRC0_CTL 0x30

Bit(s)	R/W	Default	Description
3	R/W	0	pingpong task force sel value: 1 pong 0 ping
2	R/W	0	pingpong task force enable
1	R/W	0	pingpong task initial start value 1 pong 0 ping
0	R/W	0	source trig enable

Table 7-517 ISP_DMA_SRC0_PING_CMD_ADDR0 0x31

Bit(s)	R/W	Default	Description
31:0	R/W	0	task0 cmd store address

Table 7-518 ISP_DMA_SRC0_PING_DST_ADDR0 0x32

Bit(s)	R/W	Default	Description
31:0	R/W	0	task0 dst data address,for apb read only

Table 7-519 ISP_DMA_SRC0_PING_TASK0 0x33

Bit(s)	R/W	Default	Description
31	R/W	0	task0 valid,auto clear after task done
30	R/W	0	task0 type 1 apb write 0 apb read
15:0	R/W	0	task0 cmd length,N-1 words

Table 7-520 ISP_DMA_SRC0_PING_CMD_ADDR1 0x34

Bit(s)	R/W	Default	Description
31:0	R/W	0	task1 cmd store address

Amlogic Proprietary and Confidential
Copyright © Amlogic. All rights reserved.

Table 7-521 ISP_DMA_SRC0_PING_DST_ADDR1 0x35

Bit(s)	R/W	Default	Description
31:0	R/W	0	task1 dst data address,for apb read only

Table 7-522 ISP_DMA_SRC0_PING_TASK1 0x36

Bit(s)	R/W	Default	Description
31	R/W	0	task1 valid,auto clear after task done
30	R/W	0	task1 type 1 apb write 0 apb read
15:0	R/W	0	task1 cmd length,N-1 words

ISP_DMA_SRC0_PONG_CMD_ADDR0 0x37

same as ISP_DMA_SRC0_PING_CMD_ADDR0

ISP_DMA_SRC0_PONG_DST_ADDR0 0x38

same as ISP_DMA_SRC0_PING_DST_ADDR0

ISP_DMA_SRC0_PONG_TASK0 0x39

same as ISP_DMA_SRC0_PING_TASK0

ISP_DMA_SRC0_PONG_CMD_ADDR1 0x3a

same as ISP_DMA_SRC0_PING_CMD_ADDR1

ISP_DMA_SRC0_PONG_DST_ADDR1 0x3b

same as ISP_DMA_SRC0_PING_DST_ADDR1

ISP_DMA_SRC0_PONG_TASK1 0x3c

same as ISP_DMA_SRC0_PING_TASK1

ISP_DMA_SRC1_CTL 0x3d

same as ISP_DMA_SRC0_CTL

ISP_DMA_SRC1_PING_CMD_ADDR0 0x3e

same as ISP_DMA_SRC0_PING_CMD_ADDR0

ISP_DMA_SRC1_PING_DST_ADDR0 0x3f

same as ISP_DMA_SRC0_PING_DST_ADDR0

ISP_DMA_SRC1_PING_TASK0 0x40

same as ISP_DMA_SRC0_PING_TASK0

ISP_DMA_SRC1_PING_CMD_ADDR1 0x41

same as ISP_DMA_SRC0_PING_CMD_ADDR1

ISP_DMA_SRC1_PING_DST_ADDR1 0x42

same as ISP_DMA_SRC0_PING_DST_ADDR1

ISP_DMA_SRC1_PING_TASK1 0x43

same as ISP_DMA_SRC0_PING_TASK1

Amlogic Proprietary and Confidential
Copyright © Amlogic. All rights reserved.

ISP_DMA_SRC1_PONG_CMD_ADDR0 0x44

same as ISP_DMA_SRC0_PING_CMD_ADDR0

ISP_DMA_SRC1_PONG_DST_ADDR0 0x45

same as ISP_DMA_SRC0_PING_DST_ADDR0

ISP_DMA_SRC1_PONG_TASK0 0x46

same as ISP_DMA_SRC0_PING_TASK0

ISP_DMA_SRC1_PONG_CMD_ADDR1 0x47

same as ISP_DMA_SRC0_PING_CMD_ADDR1

ISP_DMA_SRC1_PONG_DST_ADDR1 0x48

same as ISP_DMA_SRC0_PING_DST_ADDR1

ISP_DMA_SRC1_PONG_TASK1 0x49

same as ISP_DMA_SRC0_PING_TASK1

ISP_DMA_SRC2_CTL 0x4a

same as ISP_DMA_SRC0_CTL

ISP_DMA_SRC2_PING_CMD_ADDR0 0x4b

same as ISP_DMA_SRC0_PING_CMD_ADDR0

ISP_DMA_SRC2_PING_DST_ADDR0 0x4c

same as ISP_DMA_SRC0_PING_DST_ADDR0

ISP_DMA_SRC2_PING_TASK0 0x4d

same as ISP_DMA_SRC0_PING_TASK0

ISP_DMA_SRC2_PING_CMD_ADDR1 0x4e

same as ISP_DMA_SRC0_PING_CMD_ADDR1

ISP_DMA_SRC2_PING_DST_ADDR1 0x4f

same as ISP_DMA_SRC0_PING_DST_ADDR1

ISP_DMA_SRC2_PING_TASK1 0x50

same as ISP_DMA_SRC0_PING_TASK1

ISP_DMA_SRC2_PONG_CMD_ADDR0 0x51

same as ISP_DMA_SRC0_PING_CMD_ADDR0

ISP_DMA_SRC2_PONG_DST_ADDR0 0x52

same as ISP_DMA_SRC0_PING_DST_ADDR0

ISP_DMA_SRC2_PONG_TASK0 0x53

same as ISP_DMA_SRC0_PING_TASK0

ISP_DMA_SRC2_PONG_CMD_ADDR1 0x54

same as ISP_DMA_SRC0_PING_CMD_ADDR1

ISP_DMA_SRC2_PONG_DST_ADDR1 0x55

same as ISP_DMA_SRC0_PING_DST_ADDR1

ISP_DMA_SRC2_PONG_TASK1 0x56

same as ISP_DMA_SRC0_PING_TASK1

Amlogic Proprietary and Confidential
Copyright © Amlogic. All rights reserved.

ISP_DMA_SRC3_CTL 0x57

same as ISP_DMA_SRC0_CTL

ISP_DMA_SRC3_PING_CMD_ADDR0 0x58

same as ISP_DMA_SRC0_PING_CMD_ADDR0

ISP_DMA_SRC3_PING_DST_ADDR0 0x59

same as ISP_DMA_SRC0_PING_DST_ADDR0

ISP_DMA_SRC3_PING_TASK0 0x5a

same as ISP_DMA_SRC0_PING_TASK0

ISP_DMA_SRC3_PING_CMD_ADDR1 0x5b

same as ISP_DMA_SRC0_PING_CMD_ADDR1

ISP_DMA_SRC3_PING_DST_ADDR1 0x5c

same as ISP_DMA_SRC0_PING_DST_ADDR1

ISP_DMA_SRC3_PING_TASK1 0x5d

same as ISP_DMA_SRC0_PING_TASK1

ISP_DMA_SRC3_PONG_CMD_ADDR0 0x5e

same as ISP_DMA_SRC0_PING_CMD_ADDR0

ISP_DMA_SRC3_PONG_DST_ADDR0 0x5f

same as ISP_DMA_SRC0_PING_DST_ADDR0

ISP_DMA_SRC3_PONG_TASK0 0x60

same as ISP_DMA_SRC0_PING_TASK0

ISP_DMA_SRC3_PONG_CMD_ADDR1 0x61

same as ISP_DMA_SRC0_PING_CMD_ADDR1

ISP_DMA_SRC3_PONG_DST_ADDR1 0x62

same as ISP_DMA_SRC0_PING_DST_ADDR1

ISP_DMA_SRC3_PONG_TASK1 0x63

same as ISP_DMA_SRC0_PING_TASK1

ISP_DMA_SRC4_CTL 0x64

same as ISP_DMA_SRC0_CTL

ISP_DMA_SRC4_PING_CMD_ADDR0 0x65

same as ISP_DMA_SRC0_PING_CMD_ADDR0

ISP_DMA_SRC4_PING_DST_ADDR0 0x66

same as ISP_DMA_SRC0_PING_DST_ADDR0

ISP_DMA_SRC4_PING_TASK0 0x67

same as ISP_DMA_SRC0_PING_TASK0

ISP_DMA_SRC4_PING_CMD_ADDR1 0x68

same as ISP_DMA_SRC0_PING_CMD_ADDR1

ISP_DMA_SRC4_PING_DST_ADDR1 0x69

same as ISP_DMA_SRC0_PING_DST_ADDR1

Amlogic Proprietary and Confidential
Copyright © Amlogic. All rights reserved.

ISP_DMA_SRC4_PING_TASK1 0x6a

same as ISP_DMA_SRC0_PING_TASK1

ISP_DMA_SRC4_PONG_CMD_ADDR0 0x6b

same as ISP_DMA_SRC0_PING_CMD_ADDR0

ISP_DMA_SRC4_PONG_DST_ADDR0 0x6c

same as ISP_DMA_SRC0_PING_DST_ADDR0

ISP_DMA_SRC4_PONG_TASK0 0x6d

same as ISP_DMA_SRC0_PING_TASK0

ISP_DMA_SRC4_PONG_CMD_ADDR1 0x6e

same as ISP_DMA_SRC0_PING_CMD_ADDR1

ISP_DMA_SRC4_PONG_DST_ADDR1 0x6f

same as ISP_DMA_SRC0_PING_DST_ADDR1

ISP_DMA_SRC4_PONG_TASK1 0x70

same as ISP_DMA_SRC0_PING_TASK1

ISP_DMA_SRC5_CTL 0x71

same as ISP_DMA_SRC0_CTL

ISP_DMA_SRC5_PING_CMD_ADDR0 0x72

same as ISP_DMA_SRC0_PING_CMD_ADDR0

ISP_DMA_SRC5_PING_DST_ADDR0 0x73

same as ISP_DMA_SRC0_PING_DST_ADDR0

ISP_DMA_SRC5_PING_TASK0 0x74

same as ISP_DMA_SRC0_PING_TASK0

ISP_DMA_SRC5_PING_CMD_ADDR1 0x75

same as ISP_DMA_SRC0_PING_CMD_ADDR1

ISP_DMA_SRC5_PING_DST_ADDR1 0x76

same as ISP_DMA_SRC0_PING_DST_ADDR1

ISP_DMA_SRC5_PING_TASK1 0x77

same as ISP_DMA_SRC0_PING_TASK1

ISP_DMA_SRC5_PONG_CMD_ADDR0 0x78

same as ISP_DMA_SRC0_PING_CMD_ADDR0

ISP_DMA_SRC5_PONG_DST_ADDR0 0x79

same as ISP_DMA_SRC0_PING_DST_ADDR0

ISP_DMA_SRC5_PONG_TASK0 0x7a

same as ISP_DMA_SRC0_PING_TASK0

ISP_DMA_SRC5_PONG_CMD_ADDR1 0x7b

same as ISP_DMA_SRC0_PING_CMD_ADDR1

ISP_DMA_SRC5_PONG_DST_ADDR1 0x7c

same as ISP_DMA_SRC0_PING_DST_ADDR1

Amlogic Proprietary and Confidential
Copyright © Amlogic. All rights reserved.

ISP_DMA_SRC5_PONG_TASK1 0x7d
same as ISP_DMA_SRC0_PING_TASK1
ISP_DMA_SRC6_CTL 0x7e
same as ISP_DMA_SRC0_CTL
ISP_DMA_SRC6_PING_CMD_ADDR0 0x7f
same as ISP_DMA_SRC0_PING_CMD_ADDR0
ISP_DMA_SRC6_PING_DST_ADDR0 0x80
same as ISP_DMA_SRC0_PING_DST_ADDR0
ISP_DMA_SRC6_PING_TASK0 0x81
same as ISP_DMA_SRC0_PING_TASK0
ISP_DMA_SRC6_PING_CMD_ADDR1 0x82
same as ISP_DMA_SRC0_PING_CMD_ADDR1
ISP_DMA_SRC6_PING_DST_ADDR1 0x83
same as ISP_DMA_SRC0_PING_DST_ADDR1
ISP_DMA_SRC6_PING_TASK1 0x84
same as ISP_DMA_SRC0_PING_TASK1
ISP_DMA_SRC6_PONG_CMD_ADDR0 0x85
same as ISP_DMA_SRC0_PING_CMD_ADDR0
ISP_DMA_SRC6_PONG_DST_ADDR0 0x86
same as ISP_DMA_SRC0_PING_DST_ADDR0
ISP_DMA_SRC6_PONG_TASK0 0x87
same as ISP_DMA_SRC0_PING_TASK0
ISP_DMA_SRC6_PONG_CMD_ADDR1 0x88
same as ISP_DMA_SRC0_PING_CMD_ADDR1
ISP_DMA_SRC6_PONG_DST_ADDR1 0x89
same as ISP_DMA_SRC0_PING_DST_ADDR1
ISP_DMA_SRC6_PONG_TASK1 0x8a
same as ISP_DMA_SRC0_PING_TASK1
ISP_DMA_SRC7_CTL 0x8b
same as ISP_DMA_SRC0_CTL
ISP_DMA_SRC7_PING_CMD_ADDR0 0x8c
same as ISP_DMA_SRC0_PING_CMD_ADDR0
ISP_DMA_SRC7_PING_DST_ADDR0 0x8d
same as ISP_DMA_SRC0_PING_DST_ADDR0
ISP_DMA_SRC7_PING_TASK0 0x8e
same as ISP_DMA_SRC0_PING_TASK0
ISP_DMA_SRC7_PING_CMD_ADDR1 0x8f
same as ISP_DMA_SRC0_PING_CMD_ADDR1

Amlogic Proprietary and Confidential
Copyright © Amlogic. All rights reserved.

ISP_DMA_SRC7_PING_DST_ADDR1 0x90

same as ISP_DMA_SRC0_PING_DST_ADDR1

ISP_DMA_SRC7_PING_TASK1 0x91

same as ISP_DMA_SRC0_PING_TASK1

ISP_DMA_SRC7_PONG_CMD_ADDR0 0x92

same as ISP_DMA_SRC0_PING_CMD_ADDR0

ISP_DMA_SRC7_PONG_DST_ADDR0 0x93

same as ISP_DMA_SRC0_PING_DST_ADDR0

ISP_DMA_SRC7_PONG_TASK0 0x94

same as ISP_DMA_SRC0_PING_TASK0

ISP_DMA_SRC7_PONG_CMD_ADDR1 0x95

same as ISP_DMA_SRC0_PING_CMD_ADDR1

ISP_DMA_SRC7_PONG_DST_ADDR1 0x96

same as ISP_DMA_SRC0_PING_DST_ADDR1

ISP_DMA_SRC7_PONG_TASK1 0x97

same as ISP_DMA_SRC0_PING_TASK1

ISP_DMA_SRC8_CTL 0x98

same as ISP_DMA_SRC0_CTL

ISP_DMA_SRC8_PING_CMD_ADDR0 0x99

same as ISP_DMA_SRC0_PING_CMD_ADDR0

ISP_DMA_SRC8_PING_DST_ADDR0 0x9a

same as ISP_DMA_SRC0_PING_DST_ADDR0

ISP_DMA_SRC8_PING_TASK0 0x9b

same as ISP_DMA_SRC0_PING_TASK0

ISP_DMA_SRC8_PING_CMD_ADDR1 0x9c

same as ISP_DMA_SRC0_PING_CMD_ADDR1

ISP_DMA_SRC8_PING_DST_ADDR1 0x9d

same as ISP_DMA_SRC0_PING_DST_ADDR1

ISP_DMA_SRC8_PING_TASK1 0x9e

same as ISP_DMA_SRC0_PING_TASK1

ISP_DMA_SRC8_PONG_CMD_ADDR0 0x9f

same as ISP_DMA_SRC0_PING_CMD_ADDR0

ISP_DMA_SRC8_PONG_DST_ADDR0 0xa0

same as ISP_DMA_SRC0_PING_DST_ADDR0

ISP_DMA_SRC8_PONG_TASK0 0xa1

same as ISP_DMA_SRC0_PING_TASK0

ISP_DMA_SRC8_PONG_CMD_ADDR1 0xa2

same as ISP_DMA_SRC0_PING_CMD_ADDR1

Amlogic Proprietary and Confidential
Copyright © Amlogic. All rights reserved.

ISP_DMA_SRC8_PONG_DST_ADDR1 0xa3
same as ISP_DMA_SRC0_PING_DST_ADDR1
ISP_DMA_SRC8_PONG_TASK1 0xa4
same as ISP_DMA_SRC0_PING_TASK1
ISP_DMA_SRC9_CTL 0xa5
same as ISP_DMA_SRC0_CTL
ISP_DMA_SRC9_PING_CMD_ADDR0 0xa6
same as ISP_DMA_SRC0_PING_CMD_ADDR0
ISP_DMA_SRC9_PING_DST_ADDR0 0xa7
same as ISP_DMA_SRC0_PING_DST_ADDR0
ISP_DMA_SRC9_PING_TASK0 0xa8
same as ISP_DMA_SRC0_PING_TASK0
ISP_DMA_SRC9_PING_CMD_ADDR1 0xa9
same as ISP_DMA_SRC0_PING_CMD_ADDR1
ISP_DMA_SRC9_PING_DST_ADDR1 0xaa
same as ISP_DMA_SRC0_PING_DST_ADDR1
ISP_DMA_SRC9_PING_TASK1 0xab
same as ISP_DMA_SRC0_PING_TASK1
ISP_DMA_SRC9_PONG_CMD_ADDR0 0xac
same as ISP_DMA_SRC0_PING_CMD_ADDR0
ISP_DMA_SRC9_PONG_DST_ADDR0 0xad
same as ISP_DMA_SRC0_PING_DST_ADDR0
ISP_DMA_SRC9_PONG_TASK0 0xae
same as ISP_DMA_SRC0_PING_TASK0
ISP_DMA_SRC9_PONG_CMD_ADDR1 0xaf
same as ISP_DMA_SRC0_PING_CMD_ADDR1
ISP_DMA_SRC9_PONG_DST_ADDR1 0xb0
same as ISP_DMA_SRC0_PING_DST_ADDR1
ISP_DMA_SRC9_PONG_TASK1 0xb1
same as ISP_DMA_SRC0_PING_TASK1
ISP_DMA_SRC10_CTL 0xb2
same as ISP_DMA_SRC0_CTL
ISP_DMA_SRC10_PING_CMD_ADDR0 0xb3
same as ISP_DMA_SRC0_PING_CMD_ADDR0
ISP_DMA_SRC10_PING_DST_ADDR0 0xb4
same as ISP_DMA_SRC0_PING_DST_ADDR0
ISP_DMA_SRC10_PING_TASK0 0xb5
same as ISP_DMA_SRC0_PING_TASK0

Amlogic Proprietary and Confidential
Copyright © Amlogic. All rights reserved.

ISP_DMA_SRC10_PING_CMD_ADDR1 0xb6
same as ISP_DMA_SRC0_PING_CMD_ADDR1
ISP_DMA_SRC10_PING_DST_ADDR1 0xb7
same as ISP_DMA_SRC0_PING_DST_ADDR1
ISP_DMA_SRC10_PING_TASK1 0xb8
same as ISP_DMA_SRC0_PING_TASK1
ISP_DMA_SRC10_PONG_CMD_ADDR0 0xb9
same as ISP_DMA_SRC0_PING_CMD_ADDR0
ISP_DMA_SRC10_PONG_DST_ADDR0 0xba
same as ISP_DMA_SRC0_PING_DST_ADDR0
ISP_DMA_SRC10_PONG_TASK0 0xbb
same as ISP_DMA_SRC0_PING_TASK0
ISP_DMA_SRC10_PONG_CMD_ADDR1 0xbc
same as ISP_DMA_SRC0_PING_CMD_ADDR1
ISP_DMA_SRC10_PONG_DST_ADDR1 0xbd
same as ISP_DMA_SRC0_PING_DST_ADDR1
ISP_DMA_SRC10_PONG_TASK1 0xbe
same as ISP_DMA_SRC0_PING_TASK1
ISP_DMA_SRC11_CTL 0xbf
same as ISP_DMA_SRC0_CTL
ISP_DMA_SRC11_PING_CMD_ADDR0 0xc0
same as ISP_DMA_SRC0_PING_CMD_ADDR0
ISP_DMA_SRC11_PING_DST_ADDR0 0xc1
same as ISP_DMA_SRC0_PING_DST_ADDR0
ISP_DMA_SRC11_PING_TASK0 0xc2
same as ISP_DMA_SRC0_PING_TASK0
ISP_DMA_SRC11_PING_CMD_ADDR1 0xc3
same as ISP_DMA_SRC0_PING_CMD_ADDR1
ISP_DMA_SRC11_PING_DST_ADDR1 0xc4
same as ISP_DMA_SRC0_PING_DST_ADDR1
ISP_DMA_SRC11_PING_TASK1 0xc5
same as ISP_DMA_SRC0_PING_TASK1
ISP_DMA_SRC11_PONG_CMD_ADDR0 0xc6
same as ISP_DMA_SRC0_PING_CMD_ADDR0
ISP_DMA_SRC11_PONG_DST_ADDR0 0xc7
same as ISP_DMA_SRC0_PING_DST_ADDR0
ISP_DMA_SRC11_PONG_TASK0 0xc8
same as ISP_DMA_SRC0_PING_TASK0

Amlogic Proprietary and Confidential
Copyright © Amlogic. All rights reserved.

ISP_DMA_SRC11_PONG_CMD_ADDR1 0xc9

same as ISP_DMA_SRC0_PING_CMD_ADDR1

ISP_DMA_SRC11_PONG_DST_ADDR1 0xca

same as ISP_DMA_SRC0_PING_DST_ADDR1

ISP_DMA_SRC11_PONG_TASK1 0xcb

same as ISP_DMA_SRC0_PING_TASK1

ISP_DMA_SRC12_CTL 0xcc

same as ISP_DMA_SRC0_CTL

ISP_DMA_SRC12_PING_CMD_ADDR0 0xcd

same as ISP_DMA_SRC0_PING_CMD_ADDR0

ISP_DMA_SRC12_PING_DST_ADDR0 0xce

same as ISP_DMA_SRC0_PING_DST_ADDR0

ISP_DMA_SRC12_PING_TASK0 0xcf

same as ISP_DMA_SRC0_PING_TASK0

ISP_DMA_SRC12_PING_CMD_ADDR1 0xd0

same as ISP_DMA_SRC0_PING_CMD_ADDR1

ISP_DMA_SRC12_PING_DST_ADDR1 0xd1

same as ISP_DMA_SRC0_PING_DST_ADDR1

ISP_DMA_SRC12_PING_TASK1 0xd2

same as ISP_DMA_SRC0_PING_TASK1

ISP_DMA_SRC12_PONG_CMD_ADDR0 0xd3

same as ISP_DMA_SRC0_PING_CMD_ADDR0

ISP_DMA_SRC12_PONG_DST_ADDR0 0xd4

same as ISP_DMA_SRC0_PING_DST_ADDR0

ISP_DMA_SRC12_PONG_TASK0 0xd5

same as ISP_DMA_SRC0_PING_TASK0

ISP_DMA_SRC12_PONG_CMD_ADDR1 0xd6

same as ISP_DMA_SRC0_PING_CMD_ADDR1

ISP_DMA_SRC12_PONG_DST_ADDR1 0xd7

same as ISP_DMA_SRC0_PING_DST_ADDR1

ISP_DMA_SRC12_PONG_TASK1 0xd8

same as ISP_DMA_SRC0_PING_TASK1

ISP_DMA_SRC13_CTL 0xd9

same as ISP_DMA_SRC0_CTL

ISP_DMA_SRC13_PING_CMD_ADDR0 0xda

same as ISP_DMA_SRC0_PING_CMD_ADDR0

ISP_DMA_SRC13_PING_DST_ADDR0 0xdb

same as ISP_DMA_SRC0_PING_DST_ADDR0

Amlogic Proprietary and Confidential
Copyright © Amlogic. All rights reserved.

ISP_DMA_SRC13_PING_TASK0 0xdc
same as ISP_DMA_SRC0_PING_TASK0
ISP_DMA_SRC13_PING_CMD_ADDR1 0xdd
same as ISP_DMA_SRC0_PING_CMD_ADDR1
ISP_DMA_SRC13_PING_DST_ADDR1 0xde
same as ISP_DMA_SRC0_PING_DST_ADDR1
ISP_DMA_SRC13_PING_TASK1 0xdf
same as ISP_DMA_SRC0_PING_TASK1
ISP_DMA_SRC13_PONG_CMD_ADDR0 0xe0
same as ISP_DMA_SRC0_PING_CMD_ADDR0
ISP_DMA_SRC13_PONG_DST_ADDR0 0xe1
same as ISP_DMA_SRC0_PING_DST_ADDR0
ISP_DMA_SRC13_PONG_TASK0 0xe2
same as ISP_DMA_SRC0_PING_TASK0
ISP_DMA_SRC13_PONG_CMD_ADDR1 0xe3
same as ISP_DMA_SRC0_PING_CMD_ADDR1
ISP_DMA_SRC13_PONG_DST_ADDR1 0xe4
same as ISP_DMA_SRC0_PING_DST_ADDR1
ISP_DMA_SRC13_PONG_TASK1 0xe5
same as ISP_DMA_SRC0_PING_TASK1
ISP_DMA_SRC14_CTL 0xe6
same as ISP_DMA_SRC0_CTL
ISP_DMA_SRC14_PING_CMD_ADDR0 0xe7
same as ISP_DMA_SRC0_PING_CMD_ADDR0
ISP_DMA_SRC14_PING_DST_ADDR0 0xe8
same as ISP_DMA_SRC0_PING_DST_ADDR0
ISP_DMA_SRC14_PING_TASK0 0xe9
same as ISP_DMA_SRC0_PING_TASK0
ISP_DMA_SRC14_PING_CMD_ADDR1 0xea
same as ISP_DMA_SRC0_PING_CMD_ADDR1
ISP_DMA_SRC14_PING_DST_ADDR1 0xeb
same as ISP_DMA_SRC0_PING_DST_ADDR1
ISP_DMA_SRC14_PING_TASK1 0xec
same as ISP_DMA_SRC0_PING_TASK1
ISP_DMA_SRC14_PONG_CMD_ADDR0 0xed
same as ISP_DMA_SRC0_PING_CMD_ADDR0
ISP_DMA_SRC14_PONG_DST_ADDR0 0xee
same as ISP_DMA_SRC0_PING_DST_ADDR0

Amlogic Proprietary and Confidential
Copyright © Amlogic. All rights reserved.

ISP_DMA_SRC14_PONG_TASK0 0xef

same as ISP_DMA_SRC0_PING_TASK0

ISP_DMA_SRC14_PONG_CMD_ADDR1 0xf0

same as ISP_DMA_SRC0_PING_CMD_ADDR1

ISP_DMA_SRC14_PONG_DST_ADDR1 0xf1

same as ISP_DMA_SRC0_PING_DST_ADDR1

ISP_DMA_SRC14_PONG_TASK1 0xf2

same as ISP_DMA_SRC0_PING_TASK1

ISP_DMA_SRC15_CTL 0xf3

same as ISP_DMA_SRC0_CTL

ISP_DMA_SRC15_PING_CMD_ADDR0 0xf4

same as ISP_DMA_SRC0_PING_CMD_ADDR0

ISP_DMA_SRC15_PING_DST_ADDR0 0xf5

same as ISP_DMA_SRC0_PING_DST_ADDR0

ISP_DMA_SRC15_PING_TASK0 0xf6

same as ISP_DMA_SRC0_PING_TASK0

ISP_DMA_SRC15_PING_CMD_ADDR1 0xf7

same as ISP_DMA_SRC0_PING_CMD_ADDR1

ISP_DMA_SRC15_PING_DST_ADDR1 0xf8

same as ISP_DMA_SRC0_PING_DST_ADDR1

ISP_DMA_SRC15_PING_TASK1 0xf9

same as ISP_DMA_SRC0_PING_TASK1

ISP_DMA_SRC15_PONG_CMD_ADDR0 0xfa

same as ISP_DMA_SRC0_PING_CMD_ADDR0

ISP_DMA_SRC15_PONG_DST_ADDR0 0xfb

same as ISP_DMA_SRC0_PING_DST_ADDR0

ISP_DMA_SRC15_PONG_TASK0 0xfc

same as ISP_DMA_SRC0_PING_TASK0

ISP_DMA_SRC15_PONG_CMD_ADDR1 0xfd

same as ISP_DMA_SRC0_PING_CMD_ADDR1

ISP_DMA_SRC15_PONG_DST_ADDR1 0xfe

same as ISP_DMA_SRC0_PING_DST_ADDR1

ISP_DMA_SRC15_PONG_TASK1 0xff

same as ISP_DMA_SRC0_PING_TASK1

Amlogic Proprietary and Confidential
Copyright © Amlogic. All rights reserved.

MPI_ISP_TOP

Table 7-523 MIPI_TOP_CSI2_CTRL0 0xc0

Bit(s)	R/W	Default	Description
31:28	RW	0x0	debug_sel
27	RW	0x0	isp_ahb_force force isp_ahb bus hready_out to 1,set when isp_core power off
20:0	RW	0x0	soft_reset for each sub module

Table 7-524 MIPI_TOP_CSI2_CTRL2 0xbe

Bit(s)	R/W	Default	Description
28:24	RW	0x0	Dma_trig3_sel
20:16	RW	0x0	Dma_trig2_sel
12:8	RW	0x0	Dma_trig1_sel
4:0	RW	0x0	Dma_trig0_sel

Table 7-525 MIPI_TOP_CSI2_CTRL3 0xbd

Bit(s)	R/W	Default	Description
28:24	RW	0x0	Dma_trig7_sel
20:16	RW	0x0	Dma_trig6_sel
12:8	RW	0x0	Dma_trig5_sel
4:0	RW	0x0	Dma_trig4_sel

Table 7-526 MIPI_TOP_CSI2_CTRL4 0xbc

Bit(s)	R/W	Default	Description
28:24	RW	0x0	Dma_trig11_sel
20:16	RW	0x0	Dma_trig10_sel
12:8	RW	0x0	Dma_trig9_sel
4:0	RW	0x0	Dma_trig8_sel

Table 7-527 MIPI_TOP_CSI2_CTRL5 0xbb

Bit(s)	R/W	Default	Description
28:24	RW	0x0	Dma_trig15_sel
20:16	RW	0x0	Dma_trig14_sel
12:8	RW	0x0	Dma_trig13_sel
4:0	RW	0x0	Dma_trig12_sel

Amlogic Proprietary and Confidential
Copyright © Amlogic. All rights reserved.

Table 7-528 MIPI_TOP_CSI2_CTRL6 0xba

Bit(s)	R/W	Default	Description
31:0	RW	0x0	Isp2nic_qos_level

Table 7-529 MIPI_TOP_CSI2_CTRL7 0xb9

Bit(s)	R/W	Default	Description
31:0	RW	0x0	Isp2nic_aysnc_ctrl

Table 7-530 MIPI_TOP_CSI2_AXI_ST 0xb8

Bit(s)	R/W	Default	Description
2	RW	0x0	C_m1_wbus_chan_idle
1	RW	0x0	C_mo_rbus_chan_idle
0	RW	0x0	C_mo_wbus_chan_idle

7.13.4.2 ISP Compress Core Registers

ISP Compress Core Registers

The base address of compress core are listed below:

- Adapt Sub0 Compress Core: 0xFE3B4400
- TNR Sub0 Compress Core: 0xFE3B4c00
- TNR Sub1 Compress Core: 0xFE3B5000

Table 7-531 ISP_ENC_LOSS_CTRL 0x00

Bit(s)	R/W	Default	Description
31:24	R/W	6	reg_hblank1: should >=6, blank cycle between two line
23:16	R/W	6	reg_hblank0: should >=6
15:8	R/W	0	reg_sync_ctrl: shaddow control, 0 to shaddow the register
7:4	R/W	0	reg_use_inter_fmt: 0 to use external format setting: for T7, it need set to 4’b1111
3	R/W	0	reg_status_rdbk_mode: 0 to shaddow the ro status register
2:1	R/W	3	reg_stats_en:[0] to enable max_err/err_acc stats; [1] to enable error_count2 stats
0	R/W	1	reg_enable: 1 to enable

Table 7-532 ISP_ENC_LOSS_FRAME_HOLD 0x01

Bit(s)	R/W	Default	Description
31:0	R/W	1	reg_frame_hold_nums: hold clock number from frame_rst to wait register ready Note: set bit[31] to 1 indicates the compress would start till RDMA transfer finished or write [31:0] to 0xffffffff

Amlogic Proprietary and Confidential
Copyright © Amlogic. All rights reserved.

Table 7-533 ISP_ENC_LOSS_GCLK_CTRL 0x02

Bit(s)	R/W	Default	Description
31:0	R/W	0	reg_gclk_ctrl: gated-clock control

Table 7-534 ISP_ENC_LOSS_RO_CODEC_STATUS 0x03

Bit(s)	R/W	Default	Description
31:0	R/W	0	ro_codec_status:codec status, write 1 to clear

Table 7-535 ISP_ENC_LOSS_LOSS_MISC 0x04

Bit(s)	R/W	Default	Description
31:0	R/W	0	[4] MISC control register : reg_not_wait_input4busy : reg_busy_status_use4abort

Table 7-536 ISP_ENC_LOSS_BASIS 0x08

Bit(s)	R/W	Default	Description
31	R/W	0	reg_lossless_en: 1 to use lossless mode
28:24	R/W	12	reg_src_bit_depth: source data bit depth from sensor
23:21	R/W	1	reg_raw_mode:0: mono, 1:Bayer , 2/3: RGBIR2x2 4:RGBIR4x4
20	R/W	0	reg_mono_comp_mode:compression mode of mono data : 0 compression in Y , 1: compression in bayer
19:18	R/W	1	reg_xphase_ofst:phase offset in x dimmension
17:16	R/W	0	reg_yphase_ofst:phase offset in y dimmension
15:13	R/W		reserved
12:4	R/W	80	reg_ratio_bppx16: bits per pixel x16, fracbits_bpp = x/16
2:0	R/W	2	reg_comp_chn_size: color space mode for snr1 input

Table 7-537 ISP_ENC_LOSS_PIC_SIZE 0x09

Bit(s)	R/W	Default	Description
31:16	R/W	1080	reg_pic_ysize:picture verital size
15:0	R/W	1920	reg_pic_xsize:picture horizontal size

Table 7-538 ISP_ENC_LOSS_SLICE_SIZE 0x0a

Bit(s)	R/W	Default	Description
31	R/W	1	reg_use_sw_preslc_bitaccum
29:28	R/W	0	reg_slice_num_mode: 0 slice num 1, 1:slice num 2 2:slice num 4 3:slice num 8
15:0	R/W	1080	reg_slice_ysize_0:vertical slice window size for slice0

Amlogic Proprietary and Confidential
Copyright © Amlogic. All rights reserved.

Table 7-539 ISP_ENC_LOSS_SLICE_SIZE_1 0x0b

Bit(s)	R/W	Default	Description
31:16	R/W	0	reg_slice_ysize_2:vertical slice window size for slice2
15:0	R/W	0	reg_slice_ysize_1:vertical slice window size for slice1

Table 7-540 ISP_ENC_LOSS_SLICE_SIZE_2 0x0c

Bit(s)	R/W	Default	Description
31:16	R/W	0	reg_slice_ysize_4:vertical slice window size for slice4
15:0	R/W	0	reg_slice_ysize_3:vertical slice window size for slice3

Table 7-541 ISP_ENC_LOSS_SLICE_SIZE_3 0x0d

Bit(s)	R/W	Default	Description
31:16	R/W	0	reg_slice_ysize_6:vertical slice window size for slice6
15:0	R/W	0	reg_slice_ysize_5:vertical slice window size for slice5

Table 7-542 ISP_ENC_LOSS_PRESL_LAST_BITS 0x0e

Bit(s)	R/W	Default	Description
31:0	R/W	0	reg_pre_slc_bitaccum: pre slice last bits add to next slice

Table 7-543 ISP_ENC_LOSS_PRESL_FIFO_LEVEL 0x0f

Bit(s)	R/W	Default	Description
31	R/W	0	reg_use_sw_preslc_fifolevel
15:0	R/W	16	reg_pre_slc_fifolevel:pre slice fifolevel add to next slice

Table 7-544 ISP_ENC_LOSS_DEFAULT_VALUE 0x10

Bit(s)	R/W	Default	Description
31:16	R/W	2048	reg_default_value_0:default value of comp 0
15:0	R/W	2048	reg_default_value_1:default value of comp 1

Table 7-545 ISP_ENC_LOSS_DEFAULT_VALUE_1 0x11

Bit(s)	R/W	Default	Description
15:0	R/W	2048	reg_default_value_2:default value of comp 2

Amlogic Proprietary and Confidential
Copyright © Amlogic. All rights reserved.

Table 7-546 ISP_ENC_LOSS_ERROR_COUNT_THD 0x12

Bit(s)	R/W	Default	Description
31	R/W	0	reg_error_count_region_half_en:enable of static the left half of the image,1: only static left half of the image, 0: all image
15:0	R/W	100	reg_error_count_thd:threshold to count number of error bigger thd

Table 7-547 ISP_ENC_LOSS_DEBUG 0x13

Bit(s)	R/W	Default	Description
31	R/W	0	reg_debug_mode: 1 to oupput qlevel for decoder only
24:16	R/W	0	reg_dbg_qlevel_2: [24] =1 to force qlevel_2 to reg_dbg_qlevel_2[4:0]
15:8	R/W	0	reg_dbg_qlevel_1: [15] =1 to force qlevel_1 to reg_dbg_qlevel_1[4:0]
7:0	R/W	0	reg_dbg_qlevel_0: [7] =1 to force qlevel_0 to reg_dbg_qlevel_0[4:0]

Table 7-548 ISP_ENC_LOSS_GLOBAL_PHASE_LUT 0x14

Bit(s)	R/W	Default	Description
30:28	R/W	3	reg_raw_phslut_15: raw phase lut
26:24	R/W	2	reg_raw_phslut_14: raw phase lut
22:20	R/W	3	reg_raw_phslut_13: raw phase lut
18:16	R/W	2	reg_raw_phslut_12: raw phase lut
14:12	R/W	1	reg_raw_phslut_11: raw phase lut
10:8	R/W	0	reg_raw_phslut_10: raw phase lut
6:4	R/W	1	reg_raw_phslut_9: raw phase lut
2:0	R/W	0	reg_raw_phslut_8: raw phase lut

Table 7-549 ISP_ENC_LOSS_GLOBAL_PHASE_LUT_1 0x15

Bit(s)	R/W	Default	Description
30:28	R/W	3	reg_raw_phslut_7: raw phase lut
26:24	R/W	2	reg_raw_phslut_6: raw phase lut
22:20	R/W	3	reg_raw_phslut_5: raw phase lut
18:16	R/W	2	reg_raw_phslut_4: raw phase lut
14:12	R/W	1	reg_raw_phslut_3: raw phase lut
10:8	R/W	0	reg_raw_phslut_2: raw phase lut
6:4	R/W	1	reg_raw_phslut_1: raw phase lut
2:0	R/W	0	reg_raw_phslut_0: raw phase lut

Amlogic Proprietary and Confidential
Copyright © Amlogic. All rights reserved.

Table 7-550 ISP_ENC_LOSS_PHASE_LUT 0x16

Bit(s)	R/W	Default	Description
18:16	R/W	0	reg_comp_chn_lut_4: compression phase lut
14:12	R/W	0	reg_comp_chn_lut_3: compression phase lut
10: 8	R/W	1	reg_comp_chn_lut_2: compression phase lut
6: 4	R/W	1	reg_comp_chn_lut_1: compression phase lut
2: 0	R/W	0	reg_comp_chn_lut_0: compression phase lut

Table 7-551 ISP_ENC_LOSS_FLATNESS_0 0x17

Bit(s)	R/W	Default	Description
31	R/W	0	reg_flat_en: enable signal for the flatness mode.
30	R/W	0	reg_flatness_pixel_flag: enable signal for the flatness
29	R/W	0	reg_flatness_qerr_flag:
24:20	R/W	4	reg_flatness_qp_thresh: thresh qp for flatness to be used
16:12	R/W	2	reg_flatness_qp_reduce: if the cell is flatness qlevel = qlevel- flatness_qp_ reduce
11: 0	R/W	1024	reg_flatness_accum_thresh: thresh ibits_accum for flatness to be usedx16

Table 7-552 ISP_ENC_LOSS_FLATNESS_1 0x18

Bit(s)	R/W	Default	Description
11: 0	R/W	4	reg_flatness_q_err_thresh: MAX_Q_ERR-MINQ_ERR for all components is re-quired to be less than this value , flatness to be used

Table 7-553 ISP_ENC_LOSS_FLATNESS_TH 0x19

Bit(s)	R/W	Default	Description
31:16	R/W	25	reg_flatness_det_thresh: if MAX-MIN for all components is required to be less than this value , flatness to be used
15: 0	R/W	32	reg_flatness_det_thresh_max: if MAX-MIN for all components is required to be less than this value , flatness to be used

Table 7-554 ISP_ENC_LOSS_PRED 0x1a

Bit(s)	R/W	Default	Description
26:24	R/W	3	reg_pred_filter_model: mode to do filter to get side value for the pred_value, sid= 0: ref; 1: side0, 2:(sid1+sid2)/2; 3: (2sid0+sid1 +sid2)
20	R/W	0	reg_pred_vertical_model: bayer RB vertical prediction mode ,0: real n , 1: (nw + ne)/2
16	R/W	0	reg_pred_dir5flat_en: valid direction,the prediction is same as flatness
12	R/W	1	reg_pred_errlp: enable of lpf on error, 0: no lpf; 1:lpf on.

Amlogic Proprietary and Confidential
Copyright © Amlogic. All rights reserved.

Bit(s)	R/W	Default	Description
11: 8	R/W	4	reg_pred_drt5_rate: dynamic ratio to max_err of coring for no valid edge det base on min_err, norm to 32 as 1x
6: 4	R/W	4	reg_pred_dirconf_thrd: threshold to max_err for adaptive dir_conf, thrd= x*thred
2	R/W	0	reg_pred_dirconf_valid_2: for adaptive dir_conf
1	R/W	0	reg_pred_dirconf_valid_1: for adaptive dir_conf
0	R/W	0	reg_pred_dirconf_valid_0: for adaptive dir_confx

Table 7-555 ISP_ENC_LOSS_PRED_TH 0x1b

Bit(s)	R/W	Default	Description
31:16	R/W	2048	reg_pred_err0: y_g = 0 horizontal default err
15: 0	R/W	0	reg_pred_flat_thd: threshold of flat in pred

Table 7-556 ISP_ENC_LOSS_PRED_TH_1 0x1c

Bit(s)	R/W	Default	Description
31:16	R/W	2048	reg_pred_drt5flat_thd: dynamic ratio to min_err for no valid edge det base on err_flat
15: 0	R/W	20	reg_pred_drt5_thrd: static threshold to detect no valid edge base on min_err

Table 7-557 ISP_ENC_LOSS_QP_MAP_CHN0 0x1d

Bit(s)	R/W	Default	Description
28:24	R/W	11	reg_lut_budget2qp_0_3: from budget2x to master_qp mapping
20:16	R/W	12	reg_lut_budget2qp_0_2
12: 8	R/W	12	reg_lut_budget2qp_0_1
4: 0	R/W	12	reg_lut_budget2qp_0_0

Table 7-558 ISP_ENC_LOSS_QP_MAP_CHN0_1 0x1e

Bit(s)	R/W	Default	Description
28:24	R/W	9	reg_lut_budget2qp_0_7
20:16	R/W	10	reg_lut_budget2qp_0_6
12: 8	R/W	10	reg_lut_budget2qp_0_5
4: 0	R/W	11	reg_lut_budget2qp_0_4

Amlogic Proprietary and Confidential
Copyright © Amlogic. All rights reserved.

Table 7-559 ISP_ENC_LOSS_QP_MAP_CHN0_2 0x1f

Bit(s)	R/W	Default	Description
28:24	R/W	8	reg_lut_budget2qp_0_11
20:16	R/W	8	reg_lut_budget2qp_0_10
12: 8	R/W	8	reg_lut_budget2qp_0_9
4: 0	R/W	9	reg_lut_budget2qp_0_8

Table 7-560 ISP_ENC_LOSS_QP_MAP_CHN0_3 0x20

Bit(s)	R/W	Default	Description
28:24	R/W	6	reg_lut_budget2qp_0_15
20:16	R/W	6	reg_lut_budget2qp_0_14
12: 8	R/W	7	reg_lut_budget2qp_0_13
4: 0	R/W	7	reg_lut_budget2qp_0_12

Table 7-561 ISP_ENC_LOSS_QP_MAP_CHN0_4 0x21

Bit(s)	R/W	Default	Description
28:24	R/W	4	reg_lut_budget2qp_0_19
20:16	R/W	4	reg_lut_budget2qp_0_18
12: 8	R/W	5	reg_lut_budget2qp_0_17
4: 0	R/W	5	reg_lut_budget2qp_0_16

Table 7-562 ISP_ENC_LOSS_QP_MAP_CHN0_5 0x22

Bit(s)	R/W	Default	Description
28:24	R/W	0	reg_lut_budget2qp_0_23
20:16	R/W	1	reg_lut_budget2qp_0_22
12: 8	R/W	2	reg_lut_budget2qp_0_21
4: 0	R/W	3	reg_lut_budget2qp_0_20

Table 7-563 ISP_ENC_LOSS_QP_MAP_CHN0_6 0x23

Bit(s)	R/W	Default	Description
28:24	R/W	0	reg_lut_budget2qp_0_27
20:16	R/W	0	reg_lut_budget2qp_0_26
12: 8	R/W	0	reg_lut_budget2qp_0_25
4: 0	R/W	0	reg_lut_budget2qp_0_24

Amlogic Proprietary and Confidential
Copyright © Amlogic. All rights reserved.

Table 7-564 ISP_ENC_LOSS_QP_MAP_CHN0_7 0x24

Bit(s)	R/W	Default	Description
28:24	R/W	0	reg_lut_budget2qp_0_31
20:16	R/W	0	reg_lut_budget2qp_0_30
12: 8	R/W	0	reg_lut_budget2qp_0_29
4: 0	R/W	0	reg_lut_budget2qp_0_28

Table 7-565 ISP_ENC_LOSS_QP_MAP_CHN0_8 0x25

Bit(s)	R/W	Default	Description
28:24	R/W	0	reg_lut_budget2qp_0_35
20:16	R/W	0	reg_lut_budget2qp_0_34
12: 8	R/W	0	reg_lut_budget2qp_0_33
4: 0	R/W	0	reg_lut_budget2qp_0_32

Table 7-566 ISP_ENC_LOSS_QP_MAP_CHN0_9 0x26

Bit(s)	R/W	Default	Description
28:24	R/W	0	reg_lut_budget2qp_0_39
20:16	R/W	0	reg_lut_budget2qp_0_38
12: 8	R/W	0	reg_lut_budget2qp_0_37
4: 0	R/W	0	reg_lut_budget2qp_0_36

Table 7-567 ISP_ENC_LOSS_QP_MAP_CHN1 0x27

Bit(s)	R/W	Default	Description
28:24	R/W	11	reg_lut_budget2qp_1_3
20:16	R/W	12	reg_lut_budget2qp_1_2
12: 8	R/W	12	reg_lut_budget2qp_1_1
4: 0	R/W	12	reg_lut_budget2qp_1_0

Table 7-568 ISP_ENC_LOSS_QP_MAP_CHN1_1 0x28

Bit(s)	R/W	Default	Description
28:24	R/W	9	reg_lut_budget2qp_1_7
20:16	R/W	10	reg_lut_budget2qp_1_6
12: 8	R/W	10	reg_lut_budget2qp_1_5
4: 0	R/W	11	reg_lut_budget2qp_1_4

Amlogic Proprietary and Confidential
Copyright © Amlogic. All rights reserved.

Table 7-569 ISP_ENC_LOSS_QP_MAP_CHN1_2 0x29

Bit(s)	R/W	Default	Description
28:24	R/W	8	reg_lut_budget2qp_1_11
20:16	R/W	8	reg_lut_budget2qp_1_10
12: 8	R/W	8	reg_lut_budget2qp_1_9
4: 0	R/W	9	reg_lut_budget2qp_1_8

Table 7-570 ISP_ENC_LOSS_QP_MAP_CHN1_3 0x2a

Bit(s)	R/W	Default	Description
28:24	R/W	6	reg_lut_budget2qp_1_15
20:16	R/W	6	reg_lut_budget2qp_1_14
12: 8	R/W	7	reg_lut_budget2qp_1_13
4: 0	R/W	7	reg_lut_budget2qp_1_12

Table 7-571 ISP_ENC_LOSS_QP_MAP_CHN1_4 0x2b

Bit(s)	R/W	Default	Description
28:24	R/W	4	reg_lut_budget2qp_1_19
20:16	R/W	4	reg_lut_budget2qp_1_18
12: 8	R/W	5	reg_lut_budget2qp_1_17
4: 0	R/W	5	reg_lut_budget2qp_1_16

Table 7-572 ISP_ENC_LOSS_QP_MAP_CHN1_5 0x2c

Bit(s)	R/W	Default	Description
28:24	R/W	0	reg_lut_budget2qp_1_23
20:16	R/W	1	reg_lut_budget2qp_1_22
12: 8	R/W	2	reg_lut_budget2qp_1_21
4: 0	R/W	3	reg_lut_budget2qp_1_20

Table 7-573 ISP_ENC_LOSS_QP_MAP_CHN1_6 0x2d

Bit(s)	R/W	Default	Description
28:24	R/W	0	reg_lut_budget2qp_1_27
20:16	R/W	0	reg_lut_budget2qp_1_26
12: 8	R/W	0	reg_lut_budget2qp_1_25
4: 0	R/W	0	reg_lut_budget2qp_1_24

Amlogic Proprietary and Confidential
Copyright © Amlogic. All rights reserved.

Table 7-574 ISP_ENC_LOSS_QP_MAP_CHN1_7 0x2e

Bit(s)	R/W	Default	Description
28:24	R/W	0	reg_lut_budget2qp_1_31
20:16	R/W	0	reg_lut_budget2qp_1_30
12: 8	R/W	0	reg_lut_budget2qp_1_29
4: 0	R/W	0	reg_lut_budget2qp_1_28

Table 7-575 ISP_ENC_LOSS_QP_MAP_CHN1_8 0x2f

Bit(s)	R/W	Default	Description
28:24	R/W	0	reg_lut_budget2qp_1_35
20:16	R/W	0	reg_lut_budget2qp_1_34
12: 8	R/W	0	reg_lut_budget2qp_1_33
4: 0	R/W	0	reg_lut_budget2qp_1_32

Table 7-576 ISP_ENC_LOSS_QP_MAP_CHN1_9 0x30

Bit(s)	R/W	Default	Description
28:24	R/W	0	reg_lut_budget2qp_1_39
20:16	R/W	0	reg_lut_budget2qp_1_38
12: 8	R/W	0	reg_lut_budget2qp_1_37
4: 0	R/W	0	reg_lut_budget2qp_1_36

Table 7-577 ISP_ENC_LOSS_QP_MAP_CHN2 0x31

Bit(s)	R/W	Default	Description
28:24	R/W	11	reg_lut_budget2qp_2_3
20:16	R/W	12	reg_lut_budget2qp_2_2
12: 8	R/W	12	reg_lut_budget2qp_2_1
4: 0	R/W	12	reg_lut_budget2qp_2_0

Table 7-578 ISP_ENC_LOSS_QP_MAP_CHN2_1 0x32

Bit(s)	R/W	Default	Description
28:24	R/W	9	reg_lut_budget2qp_2_7
20:16	R/W	10	reg_lut_budget2qp_2_6
12: 8	R/W	10	reg_lut_budget2qp_2_5
4: 0	R/W	11	reg_lut_budget2qp_2_4

Amlogic Proprietary and Confidential
Copyright © Amlogic. All rights reserved.

Table 7-579 ISP_ENC_LOSS_QP_MAP_CHN2_2 0x33

Bit(s)	R/W	Default	Description
28:24	R/W	8	reg_lut_budget2qp_2_11
20:16	R/W	8	reg_lut_budget2qp_2_10
12: 8	R/W	8	reg_lut_budget2qp_2_9
4: 0	R/W	9	reg_lut_budget2qp_2_8

Table 7-580 ISP_ENC_LOSS_QP_MAP_CHN2_3 0x34

Bit(s)	R/W	Default	Description
28:24	R/W	6	reg_lut_budget2qp_2_15
20:16	R/W	6	reg_lut_budget2qp_2_14
12: 8	R/W	7	reg_lut_budget2qp_2_13
4: 0	R/W	7	reg_lut_budget2qp_2_12

Table 7-581 ISP_ENC_LOSS_QP_MAP_CHN2_4 0x35

Bit(s)	R/W	Default	Description
28:24	R/W	4	reg_lut_budget2qp_2_19
20:16	R/W	4	reg_lut_budget2qp_2_18
12: 8	R/W	5	reg_lut_budget2qp_2_17
4: 0	R/W	5	reg_lut_budget2qp_2_16

Table 7-582 ISP_ENC_LOSS_QP_MAP_CHN2_5 0x36

Bit(s)	R/W	Default	Description
28:24	R/W	0	reg_lut_budget2qp_2_23
20:16	R/W	1	reg_lut_budget2qp_2_22
12: 8	R/W	2	reg_lut_budget2qp_2_21
4: 0	R/W	3	reg_lut_budget2qp_2_20

Table 7-583 ISP_ENC_LOSS_QP_MAP_CHN2_6 0x37

Bit(s)	R/W	Default	Description
28:24	R/W	0	reg_lut_budget2qp_2_27
20:16	R/W	0	reg_lut_budget2qp_2_26
12: 8	R/W	0	reg_lut_budget2qp_2_25
4: 0	R/W	0	reg_lut_budget2qp_2_24

Amlogic Proprietary and Confidential
Copyright © Amlogic. All rights reserved.

Table 7-584 ISP_ENC_LOSS_QP_MAP_CHN2_7 0x38

Bit(s)	R/W	Default	Description
28:24	R/W	0	reg_lut_budget2qp_2_31
20:16	R/W	0	reg_lut_budget2qp_2_30
12: 8	R/W	0	reg_lut_budget2qp_2_29
4: 0	R/W	0	reg_lut_budget2qp_2_28

Table 7-585 ISP_ENC_LOSS_QP_MAP_CHN2_8 0x39

Bit(s)	R/W	Default	Description
28:24	R/W	0	reg_lut_budget2qp_2_35
20:16	R/W	0	reg_lut_budget2qp_2_34
12: 8	R/W	0	reg_lut_budget2qp_2_33
4: 0	R/W	0	reg_lut_budget2qp_2_32

Table 7-586 ISP_ENC_LOSS_QP_MAP_CHN2_9 0x3a

Bit(s)	R/W	Default	Description
28:24	R/W	0	reg_lut_budget2qp_2_39
20:16	R/W	0	reg_lut_budget2qp_2_38
12: 8	R/W	0	reg_lut_budget2qp_2_37
4: 0	R/W	0	reg_lut_budget2qp_2_36

Table 7-587 ISP_ENC_LOSS_RC_GROUP_2 0x3b

Bit(s)	R/W	Default	Description
31:16	R/W	1080	reg_rc_group_y: vertical size of group (super block) within picture for rate control algorithm
13: 0	R/W	24	reg_slcln_ratio: dynamic ratio to idx of extra bit budget for the cells within the line

Table 7-588 ISP_ENC_LOSS_RC_BUDGET_0 0x3c

Bit(s)	R/W	Default	Description
31:24	R/W	0	reg_rc_perln_16pec_xbdgt_3: extra bit budget (in pct= x/128) for the cells within the line, defined by 17 nodes to split the line into 16 piecies.
23:16	R/W	0	reg_rc_perln_16pec_xbdgt_2
15: 8	R/W	0	reg_rc_perln_16pec_xbdgt_1
7: 0	R/W	0	reg_rc_perln_16pec_xbdgt_0

Amlogic Proprietary and Confidential
Copyright © Amlogic. All rights reserved.

Table 7-589 ISP_ENC_LOSS_RC_BUDGET_1 0x3d

Bit(s)	R/W	Default	Description
31:24	R/W	0	reg_rc_perln_16pec_xbdgt_7
23:16	R/W	0	reg_rc_perln_16pec_xbdgt_6
15: 8	R/W	0	reg_rc_perln_16pec_xbdgt_5
7: 0	R/W	0	reg_rc_perln_16pec_xbdgt_4

Table 7-590 ISP_ENC_LOSS_RC_BUDGET_2 0x3e

Bit(s)	R/W	Default	Description
31:24	R/W	0	reg_rc_perln_16pec_xbdgt_11
23:16	R/W	0	reg_rc_perln_16pec_xbdgt_10
15: 8	R/W	0	reg_rc_perln_16pec_xbdgt_9.
7: 0	R/W	0	reg_rc_perln_16pec_xbdgt_8

Table 7-591 ISP_ENC_LOSS_RC_BUDGET_3 0x3f

Bit(s)	R/W	Default	Description
31:24	R/W	0	reg_rc_perln_16pec_xbdgt_15
23:16	R/W	0	reg_rc_perln_16pec_xbdgt_14
15: 8	R/W	0	reg_rc_perln_16pec_xbdgt_13
7: 0	R/W	0	reg_rc_perln_16pec_xbdgt_12

Table 7-592 ISP_ENC_LOSS_RC_BUDGET_4 0x40

Bit(s)	R/W	Default	Description
31:24	R/W	0	reg_rc_perln_16pec_xbdgt_16
23:16	R/W	0	reg_rc_1stln_slice_xbdgt: extra bit budget (in pct= x/128) for the first line of the slice, no prediction from pre-line;
15: 8	R/W	0	reg_rc_2ndln_slice_xbdgt: extra bit budget (in pct= x/128) for the 2nd line of the slice, with limited prediction from pre-line;
7: 0	R/W	0	reg_rc_1stln_group_xbdgt: extra bit budget (in pct= x/128) for the first line of the group, still with prediction from pre-line;

Table 7-593 ISP_ENC_LOSS_RC_BUDGET_5 0x41

Bit(s)	R/W	Default	Description
29:24	R/W	23	reg_rc_master_qpx2_max: maxmum qpx2 during the rc_loop
21:16	R/W	14	reg_rc_master_qpx2_min: minmum qpx2 during the rc_loop

Amlogic Proprietary and Confidential
Copyright © Amlogic. All rights reserved.

Bit(s)	R/W	Default	Description
15: 8	R/W	16	reg_rc_dynamic_speed_long: dynamic speed for using up the accumed bits, 2nd order gain of loop filter. normalized to 16 as 1;
7: 0	R/W	16	reg_rc_dynamic_speed_short: dynamic speed for using up the accumed bits, 1st order gain of loop filter. normalized to 64 as 1;

Table 7-594 ISP_ENC_LOSS_RC_BUDGET_6 0x42

Bit(s)	R/W	Default	Description
31	R/W	0	reg_rc_precell_bits_reset: enable for bits_cell_pre reset of each group 1, bits_ cell_pre =0 0:bits_cell_pre value unchanged
28:16	R/W	240	reg_rc_dynamic_mxblk_long: maximum number of blocks in group for long term dynamic factor, if set to 0, then no limit; otherwise set limit
12: 0	R/W	240	reg_rc_qpx2_margin3_blkth:final guard margin threshold to blocks_left_in_group

Table 7-595 ISP_ENC_LOSS_RC_QP_MARGIN 0x43

Bit(s)	R/W	Default	Description
29:16	R/W	-12	reg_rc_qpx2_margin_thd_1: threshold x16 to ibits_accum to assign extra pq margin to avoid buffer down flow
13: 0	R/W	-4	reg_rc_qpx2_margin_thd_0

Table 7-596 ISP_ENC_LOSS_RC_QP_MARGIN_1 0x44

Bit(s)	R/W	Default	Description
29:16	R/W	8	reg_rc_qpx2_margin_thd_3
13: 0	R/W	-16	reg_rc_qpx2_margin_thd_2

Table 7-597 ISP_ENC_LOSS_RC_QP_MARGIN_2 0x45

Bit(s)	R/W	Default	Description
29:24	R/W	6	reg_rc_qpx2_margin_dlt_3: delta qp margin to qp_max when ibits_accum lower than rc_qp_margin_thd[2]
21:16	R/W	5	reg_rc_qpx2_margin_dlt_2
13: 8	R/W	3	reg_rc_qpx2_margin_dlt_1
5: 0	R/W	2	reg_rc_qpx2_margin_dlt_0

Table 7-598 ISP_ENC_LOSS_RC_QP_MARGIN_3 0x46

Bit(s)	R/W	Default	Description
31:30	R/W	1	reg_rc_qpx2_margin_dlt_mode
27:16	R/W	250	reg_rc_fifo_qpx2_margin_thd_1: threshold to fifo to assign extra pq margin to avoid buffer down flow,
11: 0	R/W	150	reg_rc_fifo_qpx2_margin_thd_0

Amlogic Proprietary and Confidential
Copyright © Amlogic. All rights reserved.

Table 7-599 ISP_ENC_LOSS_RC_QP_MARGIN_4 0x47

Bit(s)	R/W	Default	Description
27:16	R/W	500	reg_rc_fifo_qpx2_margin_thd_3
11: 0	R/W	350	reg_rc_fifo_qpx2_margin_thd_2

Table 7-600 ISP_ENC_LOSS_RC_QP_MARGIN_5 0x48

Bit(s)	R/W	Default	Description
29:24	R/W	16	reg_rc_fifo_qpx2_margin_dlt_3: delta qp margin to qp_max when fifo lower than rc_qp_margin_thd[2]
21:16	R/W	7	reg_rc_fifo_qpx2_margin_dlt_2
13: 8	R/W	5	reg_rc_fifo_qpx2_margin_dlt_1
5: 0	R/W	3	reg_rc_fifo_qpx2_margin_dlt_0

Table 7-601 ISP_ENC_LOSS_FLATNESS_ADJ0 0x49

Bit(s)	R/W	Default	Description
31	R/W	0	reg_adjsize_flatness_flag: enable signal for the flatness mode,adj_predicted_ size should be small in flatness
30	R/W	0	reg_adjsize_complex_flag: enable signal for the complex mode,adj_predicted_ size should be large in complex
29	R/W	0	reg_rc_fifo_avgspeed_use_sbudget: enable to use s_budget_block as budget_ block: 0 use bits_perblk programable register, 1: use rc calculated s_budget_blk
28	R/W	0	reg_rc_bits_gap_dlt_down_en: to dlt_buget2x reduced based on bits_gap value
27:16	R/W	50	reg_adjsize_flatness_pixthd: area if(MAX-MIN) bigger than pixthd
12: 8	R/W	7	reg_adjsize_flatness_sizedlt: delta size margin to adj_predicted_size when adj_ predicted_size lower than reg_adjsize_flatness_sizedlt
4: 0	R/W	2	reg_adjsize_flatness_reduce: the cell is flatness and adj_predicted_size > thd, adj_predicted_size = adj_predicted_size- reg_adjsize_flatness_reduce

Table 7-602 ISP_ENC_LOSS_FLATNESS_ADJ1 0x4a

Bit(s)	R/W	Default	Description
27:16	R/W	512	reg_adjsize_complex_pixthd : area if(MAX-MIN) bigger than pixthd
12: 8	R/W	7	reg_adjsize_complex_sizedlt : delta size margin to adj_predicted_size when adj_ predicted_size bigger than reg_adjsize_complex_sizedlt
4: 0	R/W	2	reg_adjsize_complex_increase: if the cell is complex and adj_predicted_size < thd,adj_predicted_size = adj_predicted_size + reg_adjsize_complex_increase

Amlogic Proprietary and Confidential
Copyright © Amlogic. All rights reserved.

Table 7-603 ISP_ENC_LOSS_FIFO_THD_0 0x4b

Bit(s)	R/W	Default	Description
23:12	R/W	280	reg_rc_fifo_margin_thd_5:threshold of fifo level(in words=16bits) to guard the rc loop by adding delta to p_budget2x
11: 0	R/W	250	reg_rc_fifo_margin_thd_4

Table 7-604 ISP_ENC_LOSS_FIFO_THD_1 0x4c

Bit(s)	R/W	Default	Description
23:12	R/W	220	reg_rc_fifo_margin_thd_3
11: 0	R/W	165	reg_rc_fifo_margin_thd_2

Table 7-605 ISP_ENC_LOSS_FIFO_THD_2 0x4d

Bit(s)	R/W	Default	Description
23:12	R/W	145	reg_rc_fifo_margin_thd_1
11: 0	R/W	130	reg_rc_fifo_margin_thd_0

Table 7-606 ISP_ENC_LOSS_FIFO_AVG 0x4e

Bit(s)	R/W	Default	Description
25:20	R/W	12	reg_rc_fifo_margin_dlt_5: delta of fifo level to guard the rc loop by adding delta to p_budget2x
17:12	R/W	14	reg_rc_fifo_margin_dlt_4:
11: 0	R/W	80	reg_rc_fifo_avgspeed_bits_perblk: bits perblock fifo read/write speed, set to budget_block = (SIZE_BLK*(ratio_ bppx16))/16 as default

Table 7-607 ISP_ENC_LOSS_FIFO_DLT 0x4f

Bit(s)	R/W	Default	Description
29:24	R/W	11	reg_rc_fifo_margin_dlt_3: delta of fifo level to guard the rc loop by adding delta to p_budget2x
21:16	R/W	8	reg_rc_fifo_margin_dlt_2
13: 8	R/W	5	reg_rc_fifo_margin_dlt_1
5: 0	R/W	2	reg_rc_fifo_margin_dlt_0

Table 7-608 ISP_ENC_LOSS_BITSGAP_THD_0 0x50

Bit(s)	R/W	Default	Description
27:16	R/W	50	reg_rc_bits_gap_margin_thd_1: threshold of bits gap to reduced dlt_buget2x
11: 0	R/W	30	reg_rc_bits_gap_margin_thd_0

Amlogic Proprietary and Confidential
Copyright © Amlogic. All rights reserved.

Table 7-609 ISP_ENC_LOSS_BITSGAP_THD_1 0x51

Bit(s)	R/W	Default	Description
11: 0	R/W	82	reg_rc_bits_gap_margin_thd_2:threshold of bits gap to reduced dlt_buget2x

Table 7-610 ISP_ENC_LOSS_ICH 0x52

Bit(s)	R/W	Default	Description
25	R/W	1	reg_ich_enable: enable signal for the ich mode.
24	R/W	1	reg_ich_error_compare_pred_en: ICH maxerror compare prediction maxerror en
20:16	R/W	5	reg_ich_max_error_sel: ICH error th sel, th = 1<<sel [0,DW-1)
12: 8	R/W	8	reg_ich_bits_weight: cost bits weight(0-16)
4: 0	R/W	8	reg_pre_bits_weight: cost bits weight (0-16)

Table 7-611 ISP_ENC_LOSS_ICH_UPTH 0x53

Bit(s)	R/W	Default	Description
7: 0	R/W	4	reg_ich_update_th: thresh for ICH history update

Table 7-612 ISP_ENC_LOSS_LUMA 0x54

Bit(s)	R/W	Default	Description
16	R/W	0	reg_luma_adjust_en: enable of luma(G) adjust
12: 8	R/W	1	reg_pixel_luma_adj_dlt_1: of qelvel according to luma
4: 0	R/W	2	reg_pixel_luma_adj_dlt_0:

Table 7-613 ISP_ENC_LOSS_LUMA_TH 0x55

Bit(s)	R/W	Default	Description
31:16	R/W	128	reg_pixel_luma_adj_th_1: luma level
15: 0	R/W	256	reg_pixel_luma_adj_th_0:

Table 7-614 ISP_ENC_LOSS_ACCUM_OFSET_0 0x56

Bit(s)	R/W	Default	Description
31:24	R/W	0	reg_accum_add_ofset_2
23:16	R/W	5	reg_accum_add_ofset_1
15: 8	R/W	2	reg_accum_add_ofset_0
3: 1	R/W	2	reg_accum_ofset_shift
0	R/W	0	reg_accum_ofset_en

Amlogic Proprietary and Confidential
Copyright © Amlogic. All rights reserved.

Table 7-615 ISP_ENC_LOSS_ACCUM_OFSET_1 0x57

Bit(s)	R/W	Default	Description
31:24	R/W	0	reg_accum_add_ofset_6
23:16	R/W	5	reg_accum_add_ofset_5
15: 8	R/W	2	reg_accum_add_ofset_4
7: 0	R/W	0	reg_accum_add_ofset_3

Table 7-616 ISP_ENC_LOSS_ACCUM_OFSET_2 0x58

Bit(s)	R/W	Default	Description
15: 8	R/W	255	reg_accum_add_ofset_8
7: 0	R/W	0	reg_accum_add_ofset_7

Table 7-617 ISP_ENC_LOSS_ACCUM_OFSET_3 0x59

Bit(s)	R/W	Default	Description
11: 0	R/W	0	reg_normalize_idx_ratio

Table 7-618 ISP_ENC_LOSS_DERIVA_ADJ 0x5a

Bit(s)	R/W	Default	Description
30:28	R/W	0	reg_derivative_lut_0_9: lut of derivative adjusted
26:24	R/W	0	reg_derivative_lut_0_8
22:20	R/W	0	reg_derivative_lut_0_7
18:16	R/W	0	reg_derivative_lut_0_6
14:12	R/W	0	reg_derivative_lut_0_5
10: 8	R/W	0	reg_derivative_lut_0_4
6: 4	R/W	0	reg_derivative_lut_1_9
0	R/W	0	reg_derivative_en: 1 to enable derivative adjusted

Table 7-619 ISP_ENC_LOSS_DERIVA_ADJ_1 0x5b

Bit(s)	R/W	Default	Description
30:28	R/W	0	reg_derivative_lut_1_8
26:24	R/W	0	reg_derivative_lut_1_7
22:20	R/W	0	reg_derivative_lut_1_6
18:16	R/W	0	reg_derivative_lut_1_5
14:12	R/W	0	reg_derivative_lut_2_9
10: 8	R/W	0	reg_derivative_lut_2_8

Amlogic Proprietary and Confidential
Copyright © Amlogic. All rights reserved.

Bit(s)	R/W	Default	Description
6: 4	R/W	0	reg_derivative_lut_2_7
2: 0	R/W	0	reg_derivative_lut_2_6

Table 7-620 ISP_ENC_LOSS_DERIVA_ADJ_2 0x5c

Bit(s)	R/W	Default	Description
30:28	R/W	0	reg_derivative_lut_9_5
26:24	R/W	0	reg_derivative_lut_9_4
22:20	R/W	0	reg_derivative_lut_9_3
18:16	R/W	0	reg_derivative_lut_9_2
14:12	R/W	0	reg_derivative_lut_9_1
10: 8	R/W	0	reg_derivative_lut_9_0
6: 4	R/W	0	reg_derivative_lut_8_4
2: 0	R/W	0	reg_derivative_lut_8_3

Table 7-621 ISP_ENC_LOSS_DERIVA_ADJ_3 0x5d

Bit(s)	R/W	Default	Description
30:28	R/W	0	reg_derivative_lut_8_2
26:24	R/W	0	reg_derivative_lut_8_1
22:20	R/W	0	reg_derivative_lut_8_0
18:16	R/W	0	reg_derivative_lut_7_4
14:12	R/W	0	reg_derivative_lut_7_3
10: 8	R/W	0	reg_derivative_lut_7_2
6: 4	R/W	0	reg_derivative_lut_7_1
2: 0	R/W	0	reg_derivative_lut_7_0

Table 7-622 ISP_ENC_LOSS_WDR_LINE_DELAY 0x5e

Bit(s)	R/W	Default	Description
31	R/W	0	reg_wdr_mode_en: mode enable,(in this mode have line delay between long and short frame)
15: 0	R/W	4	reg_wdr_delay_line: delay between long and short frame in wdr mode

Table 7-623 ISP_ENC_LOSS_STATS_RAM_MODE 0x5f

Bit(s)	R/W	Default	Description
1	R/W	0	reg_stats_slice_rdmode: 0 to read slice according to reg_slice_num_mode
0	R/W	0	reg_stats_ram_rden: 1 to read stats ram enable

Amlogic Proprietary and Confidential
Copyright © Amlogic. All rights reserved.

Table 7-624 ISP_ENC_LOSS_STATS_RAM_ADDR 0x60

Bit(s)	R/W	Default	Description
8: 0	R/W	0	reg_stats_ram_addr: statistics info ram status address

Table 7-625 ISP_ENC_LOSS_RO_STATS_RAM_DATA 0x61

Bit(s)	R/W	Default	Description
31: 0	R.O	0	ro_stats_ram_data: statistics info from ram data

Table 7-626 ISP_ENC_LOSS_MIF_CTRL 0x70

Bit(s)	R/W	Default	Description
31:24	R/W	0	reg_sync_sel: 0 to sync with frm rst [24]: for enable [25]: for reg_canvas_id [26]: for dol mode
23:16	R/W	0	reg_canvas_id: axi canvas id num
14:12	R/W	1	reg_cmd_intr_len: interrupt send cmd when how many series axi cmd, 0=12 1= 16 2=24 3=32 4=40 5=48 6=56 7=64
9: 8	R/W	1	reg_cmd_req_size: how many room fifo have, then axi send series req, 0=16 1= 32 2=48 3=64
6: 4	R/W	3	reg_burst_len: burst type: 0->1; 1->2; 2->4; 3->8; 4->16, others reserved
2	R/W	0	reg_check_resp_id: 1 to check RESP ID
1	R/W	0	reg_dol_mode: 1: DOL mode
0	R/W	1	reg_mif_enable: 1 to enable mif

Table 7-627 ISP_ENC_LOSS_MIF_QOS 0x71

Bit(s)	R/W	Default	Description
31:0	R/W	0	reg_qos_ctrl: Qos control [18] : reg_qos_auto_en [17] : reg_qos_sup [16] : reg_qos_ini [15:8]: reg_qos_up_th [7:0]: reg_qos_dn_th

Table 7-628 ISP_ENC_LOSS_MIF_URGENT 0x72

Bit(s)	R/W	Default	Description
31:0	R/W	0	reg_urgent_ctrl: urgent control [18] : reg_urgent_auto_en [17] : reg_urgent_sup [16] : reg_urgent_ini [15:8]: reg_urgent_up_th [7:0]: reg_urgent_dn_th

Amlogic Proprietary and Confidential
Copyright © Amlogic. All rights reserved.

Table 7-629 ISP_ENC_LOSS_MIF_MISC 0x73

Bit(s)	R/W	Default	Description
3	R/W	1	reg_mif_busy_noresp_check: for mif write, dont take "respond busy" as mif unit busy.
2	R/W	0	reg_mif_wait_input4busy: use in encoder, mif is busy till input data comming. only for mif wr
1	R/W	0	reg_mif_dbl_baddr_init: write 1 to use reg_mif_baddr as base-addr for next frame,it would be clear automatically.
0	R/W	0	reg_mif_dbl_baddr_en:

Table 7-630 ISP_ENC_LOSS_MIF_BADDR 0x74

Bit(s)	R/W	Default	Description
31:0	R/W	0	reg_mif_baddr: mif base address

Table 7-631 ISP_ENC_LOSS_MIF_BADDR1 0x75

Bit(s)	R/W	Default	Description
31:0	R/W	0	reg_mif_baddr1: mif base address

Table 7-632 ISP_ENC_LOSS_MIF_FIFO_CTRL 0x77

Bit(s)	R/W	Default	Description
31:16	R/W	0	reg_mif_gclk_ctrl: gate clock control
7:0	R/W	128	reg_mif_fifo_size: data FIFO max size, default = 128,

Table 7-633 ISP_ENC_LOSS_MIF_FRM_HOLD 0x78

Bit(s)	R/W	Default	Description
31:0	R/W	16	reg_mif_frm_holds: clock cycle holder from frm_rst to wait register ready, default = 16 Note: set bit[31] to 1 indicates the compress would start to work till RDMA transfer finished or write [31:0] to 0xffffffff

Table 7-634 ISP_ENC_LOSS_MIF_RO_STATS 0x79

Bit(s)	R/W	Default	Description
31: 0	R.O	0	ro_mif_status: mif status

Table 7-635 ISP_DEC_LOSS_CTRL 0x80

Bit(s)	R/W	Default	Description
31:24	R/W	6	reg_hblank1: should >=6, blank cycle between two line
23:16	R/W	6	reg_hblank0: should >=6

Amlogic Proprietary and Confidential
Copyright © Amlogic. All rights reserved.

Bit(s)	R/W	Default	Description
15:8	R/W	0	reg_sync_ctrl: shaddow control, 0 to shaddow the register
7:4	R/W	0	reg_use_inter_fmt: 0 to use external format setting: for T7, it need set to 4'b1111
3	R/W	0	reg_status_rdbk_mode: 0 to shaddow the ro status register
2:1	R/W	3	reg_stats_en:[0] to enable max_err/err_acc stats; [1] to enable error_count2 stats
0	R/W	1	reg_enable: 1 to enable

Table 7-636 ISP_DEC_LOSS_FRAME_HOLD 0x81

Bit(s)	R/W	Default	Description
31:0	R/W	1	reg_frame_hold_nums: hold clock number from frame_rst to wait register ready Note: set bit[31] to 1 indicates the compress would start till RDMA transfer finished or write [31:0] to 0xffffffff

Table 7-637 ISP_DEC_LOSS_GCLK_CTRL 0x82

Bit(s)	R/W	Default	Description
31:0	R/W	0	reg_gclk_ctrl: gated-clock control

Table 7-638 ISP_DEC_LOSS_RO_CODEC_STATUS 0x83

Bit(s)	R/W	Default	Description
31:0	R/W	0	ro_codec_status:codec status, write 1 to clear

Table 7-639 ISP_DEC_LOSS_LOSS_MISC 0x84

Bit(s)	R/W	Default	Description
31:0	R/W	0	[5] MISC control register : reg_not_wait_input4busy : reg_busy_status_use4abort

Table 7-640 ISP_DEC_LOSS_BASIS 0x88

Bit(s)	R/W	Default	Description
31	R/W	0	reg_lossless_en: 1 to use lossless mode
28:24	R/W	12	reg_src_bit_depth: source data bit depth from sensor
23:21	R/W	1	reg_raw_mode:0: mono, 1:Bayer , 2/3: RGBIR2x2 4:RGBIR4x4
20	R/W	0	reg_mono_comp_mode:compression mode of mono data : 0 compression in Y , 1: compression in bayer
19:18	R/W	1	reg_xphase_ofst:phase offset in x dimmension
17:16	R/W	0	reg_yphase_ofst:phase offset in y dimmension
15:13	R/W		reserved

Amlogic Proprietary and Confidential
Copyright © Amlogic. All rights reserved.

Bit(s)	R/W	Default	Description
12:4	R/W	80	reg_ratio_bppx16: bits per pixel x16, fracbits_bpp = x/16
2:0	R/W	2	reg_comp_chn_size: color space mode for snr1 input

Table 7-641 ISP_DEC_LOSS_PIC_SIZE 0x89

Bit(s)	R/W	Default	Description
31:16	R/W	1080	reg_pic_ysize:picture verital size
15:0	R/W	1920	reg_pic_xsize:picture horizontal size

Table 7-642 ISP_DEC_LOSS_SLICE_SIZE 0x8a

Bit(s)	R/W	Default	Description
31	R/W	1	reg_use_sw_preslc_bitaccum
29:28	R/W	0	reg_slice_num_mode: 0 slice num 1, 1:slice num 2 2:slice num 4 3:slice num 8
15:0	R/W	1080	reg_slice_ysize_0:vertical slice window size for slice0

Table 7-643 ISP_DEC_LOSS_SLICE_SIZE_1 0x8b

Bit(s)	R/W	Default	Description
31:16	R/W	0	reg_slice_ysize_2:vertical slice window size for slice2
15:0	R/W	0	reg_slice_ysize_1:vertical slice window size for slice1

Table 7-644 ISP_DEC_LOSS_SLICE_SIZE_2 0x8c

Bit(s)	R/W	Default	Description
31:16	R/W	0	reg_slice_ysize_4:vertical slice window size for slice4
15:0	R/W	0	reg_slice_ysize_3:vertical slice window size for slice3

Table 7-645 ISP_DEC_LOSS_SLICE_SIZE_3 0x8d

Bit(s)	R/W	Default	Description
31:16	R/W	0	reg_slice_ysize_6:vertical slice window size for slice6
15:0	R/W	0	reg_slice_ysize_5:vertical slice window size for slice5

Table 7-646 ISP_DEC_LOSS_PRESL_LAST_BITS 0x8e

Bit(s)	R/W	Default	Description
31:0	R/W	0	reg_pre_slc_bitaccum: pre slice last bits add to next slice

Amlogic Proprietary and Confidential
Copyright © Amlogic. All rights reserved.

Table 7-647 ISP_DEC_LOSS_PRESL_FIFO_LEVEL 0x8f

Bit(s)	R/W	Default	Description
31	R/W	0	reg_use_sw_preslc_fifolevel
15:0	R/W	16	reg_pre_slc_fifolevel:pre slice fifolevel add to next slice

Table 7-648 ISP_DEC_LOSS_DEFAULT_VALUE 0x90

Bit(s)	R/W	Default	Description
31:16	R/W	2048	reg_default_value_0:default value of comp 0
15:0	R/W	2048	reg_default_value_1:default value of comp 1

Table 7-649 ISP_DEC_LOSS_DEFAULT_VALUE_1 0x91

Bit(s)	R/W	Default	Description
15:0	R/W	2048	reg_default_value_2:default value of comp 2

Table 7-650 ISP_DEC_LOSS_ERROR_COUNT_THD 0x92

Bit(s)	R/W	Default	Description
31	R/W	0	reg_error_count_region_half_en:enable of static the left half of the image,1: only static left half of the image, 0: all image
15:0	R/W	100	reg_error_count_thd:threshold to count number of error bigger thd

Table 7-651 ISP_DEC_LOSS_DEBUG 0x93

Bit(s)	R/W	Default	Description
31	R/W	0	reg_debug_mode: 1 to oupput qlevel for decoder only
24:16	R/W	0	reg_dbg_qlevel_2: [24] =1 to force qlevel_2 to reg_dbg_qlevel_2[4:0]
15:8	R/W	0	reg_dbg_qlevel_1: [15] =1 to force qlevel_1 to reg_dbg_qlevel_1[4:0]
7:0	R/W	0	reg_dbg_qlevel_0: [7] =1 to force qlevel_0 to reg_dbg_qlevel_0[4:0]

Table 7-652 ISP_DEC_LOSS_GLOBAL_PHASE_LUT 0x94

Bit(s)	R/W	Default	Description
30:28	R/W	3	reg_raw_phslut_15: raw phase lut
26:24	R/W	2	reg_raw_phslut_14: raw phase lut
22:20	R/W	3	reg_raw_phslut_13: raw phase lut
18:16	R/W	2	reg_raw_phslut_12: raw phase lut
14:12	R/W	1	reg_raw_phslut_11: raw phase lut
10:8	R/W	0	reg_raw_phslut_10: raw phase lut

Amlogic Proprietary and Confidential
Copyright © Amlogic. All rights reserved.

Bit(s)	R/W	Default	Description
6:4	R/W	1	reg_raw_phslut_9: raw phase lut
2:0	R/W	0	reg_raw_phslut_8: raw phase lut

Table 7-653 ISP_DEC_LOSS_GLOBAL_PHASE_LUT_1 0x95

Bit(s)	R/W	Default	Description
30:28	R/W	3	reg_raw_phslut_7: raw phase lut
26:24	R/W	2	reg_raw_phslut_6: raw phase lut
22:20	R/W	3	reg_raw_phslut_5: raw phase lut
18:16	R/W	2	reg_raw_phslut_4: raw phase lut
14:12	R/W	1	reg_raw_phslut_3: raw phase lut
10:8	R/W	0	reg_raw_phslut_2: raw phase lut
6:4	R/W	1	reg_raw_phslut_1: raw phase lut
2:0	R/W	0	reg_raw_phslut_0: raw phase lut

Table 7-654 ISP_DEC_LOSS_PHASE_LUT 0x96

Bit(s)	R/W	Default	Description
18:16	R/W	0	reg_comp_chn_lut_4: compression phase lut
14:12	R/W	0	reg_comp_chn_lut_3: compression phase lut
10: 8	R/W	1	reg_comp_chn_lut_2: compression phase lut
6: 4	R/W	1	reg_comp_chn_lut_1: compression phase lut
2: 0	R/W	0	reg_comp_chn_lut_0: compression phase lut

Table 7-655 ISP_DEC_LOSS_FLATNESS_0 0x97

Bit(s)	R/W	Default	Description
31	R/W	0	reg_flat_en: enable signal for the flatness mode.
30	R/W	0	reg_flatness_pixel_flag: enable signal for the flatness
29	R/W	0	reg_flatness_qerr_flag:
24:20	R/W	4	reg_flatness_qp_thresh: thresh qp for flatness to be used
16:12	R/W	2	reg_flatness_qp_reduce: if the cell is flatness qlevel = qlevel- flatness_qp_ reduce
11: 0	R/W	1024	reg_flatness_accum_thresh: thresh ibits_accum for flatness to be usedx16

Table 7-656 ISP_DEC_LOSS_FLATNESS_1 0x98

Bit(s)	R/W	Default	Description
11: 0	R/W	4	reg_flatness_q_err_thresh: MAX_Q_ERR-MINQ_ERR for all components is re-quired to be less than this value , flatness to be used

Amlogic Proprietary and Confidential
Copyright © Amlogic. All rights reserved.

Table 7-657 ISP_DEC_LOSS_FLATNESS_TH 0x99

Bit(s)	R/W	Default	Description
31:16	R/W	25	reg_flatness_det_thresh: if MAX-MIN for all components is required to be less than this value , flatness to be used
15: 0	R/W	32	reg_flatness_det_thresh_max: if MAX-MIN for all components is required to be less than this value , flatness to be used

Table 7-658 ISP_DEC_LOSS_PRED 0x9a

Bit(s)	R/W	Default	Description
26:24	R/W	3	reg_pred_filter_model: mode to do filter to get side value for the pred_value, sid= 0: ref; 1: side0, 2:(sid1+sid2)/2; 3: (2sid0+sid1 +sid2)
20	R/W	0	reg_pred_vertical_model: bayer RB vertical prediction mode ,0: real n , 1: (nw + ne)/2
16	R/W	0	reg_pred_dir5flat_en: valid direction,the prediction is same as flatness
12	R/W	1	reg_pred_errlp: enable of lpf on error, 0: no lpf; 1:lpf on.
11: 8	R/W	4	reg_pred_drt5_rate: dynamic ratio to max_err of coring for no valid edge det base on min_err, norm to 32 as 1x
6: 4	R/W	4	reg_pred_dirconf_thrd: threshold to max_err for adaptive dir_conf, thrd= x*thred
2	R/W	0	reg_pred_dirconf_valid_2: for adaptive dir_conf
1	R/W	0	reg_pred_dirconf_valid_1: for adaptive dir_conf
0	R/W	0	reg_pred_dirconf_valid_0: for adaptive dir_confx

Table 7-659 ISP_DEC_LOSS_PRED_TH 0x9b

Bit(s)	R/W	Default	Description
31:16	R/W	2048	reg_pred_err0: y_g = 0 horizontal default err
15: 0	R/W	0	reg_pred_flat_thd: threshold of flat in pred

Table 7-660 ISP_DEC_LOSS_PRED_TH_1 0x9c

Bit(s)	R/W	Default	Description
31:16	R/W	2048	reg_pred_drt5flat_thd: dynamic ratio to min_err for no valid edge det base on err_flat
15: 0	R/W	20	reg_pred_drt5_thrd: static threshold to detect no valid edge base on min_err

Table 7-661 ISP_DEC_LOSS_QP_MAP_CHN0 0x9d

Bit(s)	R/W	Default	Description
28:24	R/W	11	reg_lut_budget2qp_0_3: from budget2x to master_qp mapping
20:16	R/W	12	reg_lut_budget2qp_0_2

Amlogic Proprietary and Confidential
Copyright © Amlogic. All rights reserved.

Bit(s)	R/W	Default	Description
12: 8	R/W	12	reg_lut_budget2qp_0_1
4: 0	R/W	12	reg_lut_budget2qp_0_0

Table 7-662 ISP_DEC_LOSS_QP_MAP_CHN0_1 0x9e

Bit(s)	R/W	Default	Description
28:24	R/W	9	reg_lut_budget2qp_0_7
20:16	R/W	10	reg_lut_budget2qp_0_6
12: 8	R/W	10	reg_lut_budget2qp_0_5
4: 0	R/W	11	reg_lut_budget2qp_0_4

Table 7-663 ISP_DEC_LOSS_QP_MAP_CHN0_2 0x9f

Bit(s)	R/W	Default	Description
28:24	R/W	8	reg_lut_budget2qp_0_11
20:16	R/W	8	reg_lut_budget2qp_0_10
12: 8	R/W	8	reg_lut_budget2qp_0_9
4: 0	R/W	9	reg_lut_budget2qp_0_8

Table 7-664 ISP_DEC_LOSS_QP_MAP_CHN0_3 0xa0

Bit(s)	R/W	Default	Description
28:24	R/W	6	reg_lut_budget2qp_0_15
20:16	R/W	6	reg_lut_budget2qp_0_14
12: 8	R/W	7	reg_lut_budget2qp_0_13
4: 0	R/W	7	reg_lut_budget2qp_0_12

Table 7-665 ISP_DEC_LOSS_QP_MAP_CHN0_4 0xa1

Bit(s)	R/W	Default	Description
28:24	R/W	4	reg_lut_budget2qp_0_19
20:16	R/W	4	reg_lut_budget2qp_0_18
12: 8	R/W	5	reg_lut_budget2qp_0_17
4: 0	R/W	5	reg_lut_budget2qp_0_16

Amlogic Proprietary and Confidential
Copyright © Amlogic. All rights reserved.

Table 7-666 ISP_DEC_LOSS_QP_MAP_CHN0_5 0xa2

Bit(s)	R/W	Default	Description
28:24	R/W	0	reg_lut_budget2qp_0_23
20:16	R/W	1	reg_lut_budget2qp_0_22
12: 8	R/W	2	reg_lut_budget2qp_0_21
4: 0	R/W	3	reg_lut_budget2qp_0_20

Table 7-667 ISP_DEC_LOSS_QP_MAP_CHN0_6 0xa3

Bit(s)	R/W	Default	Description
28:24	R/W	0	reg_lut_budget2qp_0_27
20:16	R/W	0	reg_lut_budget2qp_0_26
12: 8	R/W	0	reg_lut_budget2qp_0_25
4: 0	R/W	0	reg_lut_budget2qp_0_24

Table 7-668 ISP_DEC_LOSS_QP_MAP_CHN0_7 0xa4

Bit(s)	R/W	Default	Description
28:24	R/W	0	reg_lut_budget2qp_0_31
20:16	R/W	0	reg_lut_budget2qp_0_30
12: 8	R/W	0	reg_lut_budget2qp_0_29
4: 0	R/W	0	reg_lut_budget2qp_0_28

Table 7-669 ISP_DEC_LOSS_QP_MAP_CHN0_8 0xa5

Bit(s)	R/W	Default	Description
28:24	R/W	0	reg_lut_budget2qp_0_35
20:16	R/W	0	reg_lut_budget2qp_0_34
12: 8	R/W	0	reg_lut_budget2qp_0_33
4: 0	R/W	0	reg_lut_budget2qp_0_32

Table 7-670 ISP_DEC_LOSS_QP_MAP_CHN0_9 0xa6

Bit(s)	R/W	Default	Description
28:24	R/W	0	reg_lut_budget2qp_0_39
20:16	R/W	0	reg_lut_budget2qp_0_38
12: 8	R/W	0	reg_lut_budget2qp_0_37
4: 0	R/W	0	reg_lut_budget2qp_0_36

Amlogic Proprietary and Confidential
Copyright © Amlogic. All rights reserved.

Table 7-671 ISP_DEC_LOSS_QP_MAP_CHN1 0xa7

Bit(s)	R/W	Default	Description
28:24	R/W	11	reg_lut_budget2qp_1_3
20:16	R/W	12	reg_lut_budget2qp_1_2
12: 8	R/W	12	reg_lut_budget2qp_1_1
4: 0	R/W	12	reg_lut_budget2qp_1_0

Table 7-672 ISP_DEC_LOSS_QP_MAP_CHN1_1 0xa8

Bit(s)	R/W	Default	Description
28:24	R/W	9	reg_lut_budget2qp_1_7
20:16	R/W	10	reg_lut_budget2qp_1_6
12: 8	R/W	10	reg_lut_budget2qp_1_5
4: 0	R/W	11	reg_lut_budget2qp_1_4

Table 7-673 ISP_DEC_LOSS_QP_MAP_CHN1_2 0xa9

Bit(s)	R/W	Default	Description
28:24	R/W	8	reg_lut_budget2qp_1_11
20:16	R/W	8	reg_lut_budget2qp_1_10
12: 8	R/W	8	reg_lut_budget2qp_1_9
4: 0	R/W	9	reg_lut_budget2qp_1_8

Table 7-674 ISP_DEC_LOSS_QP_MAP_CHN1_3 0xaa

Bit(s)	R/W	Default	Description
28:24	R/W	6	reg_lut_budget2qp_1_15
20:16	R/W	6	reg_lut_budget2qp_1_14
12: 8	R/W	7	reg_lut_budget2qp_1_13
4: 0	R/W	7	reg_lut_budget2qp_1_12

Table 7-675 ISP_DEC_LOSS_QP_MAP_CHN1_4 0xab

Bit(s)	R/W	Default	Description
28:24	R/W	4	reg_lut_budget2qp_1_19
20:16	R/W	4	reg_lut_budget2qp_1_18
12: 8	R/W	5	reg_lut_budget2qp_1_17
4: 0	R/W	5	reg_lut_budget2qp_1_16

Amlogic Proprietary and Confidential
Copyright © Amlogic. All rights reserved.

Table 7-676 ISP_DEC_LOSS_QP_MAP_CHN1_5 0xac

Bit(s)	R/W	Default	Description
28:24	R/W	0	reg_lut_budget2qp_1_23
20:16	R/W	1	reg_lut_budget2qp_1_22
12: 8	R/W	2	reg_lut_budget2qp_1_21
4: 0	R/W	3	reg_lut_budget2qp_1_20

Table 7-677 ISP_DEC_LOSS_QP_MAP_CHN1_6 0xad

Bit(s)	R/W	Default	Description
28:24	R/W	0	reg_lut_budget2qp_1_27
20:16	R/W	0	reg_lut_budget2qp_1_26
12: 8	R/W	0	reg_lut_budget2qp_1_25
4: 0	R/W	0	reg_lut_budget2qp_1_24

Table 7-678 ISP_DEC_LOSS_QP_MAP_CHN1_7 0xae

Bit(s)	R/W	Default	Description
28:24	R/W	0	reg_lut_budget2qp_1_31
20:16	R/W	0	reg_lut_budget2qp_1_30
12: 8	R/W	0	reg_lut_budget2qp_1_29
4: 0	R/W	0	reg_lut_budget2qp_1_28

Table 7-679 ISP_DEC_LOSS_QP_MAP_CHN1_8 0xaf

Bit(s)	R/W	Default	Description
28:24	R/W	0	reg_lut_budget2qp_1_35
20:16	R/W	0	reg_lut_budget2qp_1_34
12: 8	R/W	0	reg_lut_budget2qp_1_33
4: 0	R/W	0	reg_lut_budget2qp_1_32

Table 7-680 ISP_DEC_LOSS_QP_MAP_CHN1_9 0xb0

Bit(s)	R/W	Default	Description
28:24	R/W	0	reg_lut_budget2qp_1_39
20:16	R/W	0	reg_lut_budget2qp_1_38
12: 8	R/W	0	reg_lut_budget2qp_1_37
4: 0	R/W	0	reg_lut_budget2qp_1_36

Amlogic Proprietary and Confidential
Copyright © Amlogic. All rights reserved.

Table 7-681 ISP_DEC_LOSS_QP_MAP_CHN2 0xb1

Bit(s)	R/W	Default	Description
28:24	R/W	11	reg_lut_budget2qp_2_3
20:16	R/W	12	reg_lut_budget2qp_2_2
12: 8	R/W	12	reg_lut_budget2qp_2_1
4: 0	R/W	12	reg_lut_budget2qp_2_0

Table 7-682 ISP_DEC_LOSS_QP_MAP_CHN2_1 0xb2

Bit(s)	R/W	Default	Description
28:24	R/W	9	reg_lut_budget2qp_2_7
20:16	R/W	10	reg_lut_budget2qp_2_6
12: 8	R/W	10	reg_lut_budget2qp_2_5
4: 0	R/W	11	reg_lut_budget2qp_2_4

Table 7-683 ISP_DEC_LOSS_QP_MAP_CHN2_2 0xb3

Bit(s)	R/W	Default	Description
28:24	R/W	8	reg_lut_budget2qp_2_11
20:16	R/W	8	reg_lut_budget2qp_2_10
12: 8	R/W	8	reg_lut_budget2qp_2_9
4: 0	R/W	9	reg_lut_budget2qp_2_8

Table 7-684 ISP_DEC_LOSS_QP_MAP_CHN2_3 0xb4

Bit(s)	R/W	Default	Description
28:24	R/W	6	reg_lut_budget2qp_2_15
20:16	R/W	6	reg_lut_budget2qp_2_14
12: 8	R/W	7	reg_lut_budget2qp_2_13
4: 0	R/W	7	reg_lut_budget2qp_2_12

Table 7-685 ISP_DEC_LOSS_QP_MAP_CHN2_4 0xb5

Bit(s)	R/W	Default	Description
28:24	R/W	4	reg_lut_budget2qp_2_19
20:16	R/W	4	reg_lut_budget2qp_2_18
12: 8	R/W	5	reg_lut_budget2qp_2_17
4: 0	R/W	5	reg_lut_budget2qp_2_16

Amlogic Proprietary and Confidential
Copyright © Amlogic. All rights reserved.

Table 7-686 ISP_DEC_LOSS_QP_MAP_CHN2_5 0xb6

Bit(s)	R/W	Default	Description
28:24	R/W	0	reg_lut_budget2qp_2_23
20:16	R/W	1	reg_lut_budget2qp_2_22
12: 8	R/W	2	reg_lut_budget2qp_2_21
4: 0	R/W	3	reg_lut_budget2qp_2_20

Table 7-687 ISP_DEC_LOSS_QP_MAP_CHN2_6 0xb7

Bit(s)	R/W	Default	Description
28:24	R/W	0	reg_lut_budget2qp_2_27
20:16	R/W	0	reg_lut_budget2qp_2_26
12: 8	R/W	0	reg_lut_budget2qp_2_25
4: 0	R/W	0	reg_lut_budget2qp_2_24

Table 7-688 ISP_DEC_LOSS_QP_MAP_CHN2_7 0xb8

Bit(s)	R/W	Default	Description
28:24	R/W	0	reg_lut_budget2qp_2_31
20:16	R/W	0	reg_lut_budget2qp_2_30
12: 8	R/W	0	reg_lut_budget2qp_2_29
4: 0	R/W	0	reg_lut_budget2qp_2_28

Table 7-689 ISP_DEC_LOSS_QP_MAP_CHN2_8 0xb9

Bit(s)	R/W	Default	Description
28:24	R/W	0	reg_lut_budget2qp_2_35
20:16	R/W	0	reg_lut_budget2qp_2_34
12: 8	R/W	0	reg_lut_budget2qp_2_33
4: 0	R/W	0	reg_lut_budget2qp_2_32

Table 7-690 ISP_DEC_LOSS_QP_MAP_CHN2_9 0xba

Bit(s)	R/W	Default	Description
28:24	R/W	0	reg_lut_budget2qp_2_39
20:16	R/W	0	reg_lut_budget2qp_2_38
12: 8	R/W	0	reg_lut_budget2qp_2_37
4: 0	R/W	0	reg_lut_budget2qp_2_36

Amlogic Proprietary and Confidential
Copyright © Amlogic. All rights reserved.

Table 7-691 ISP_DEC_LOSS_RC_GROUP_2 0xbb

Bit(s)	R/W	Default	Description
31:16	R/W	1080	reg_rc_group_y: vertical size of group (super block) within picture for rate control algorithm
13: 0	R/W	24	reg_slcln_ratio: dynamic ratio to idx of extra bit budget for the cells within the line

Table 7-692 ISP_DEC_LOSS_RC_BUDGET_0 0xbc

Bit(s)	R/W	Default	Description
31:24	R/W	0	reg_rc_perln_16pec_xbdgt_3: extra bit budget (in pct= x/128) for the cells within the line, defined by 17 nodes to split the line into 16 piecies.
23:16	R/W	0	reg_rc_perln_16pec_xbdgt_2
15: 8	R/W	0	reg_rc_perln_16pec_xbdgt_1
7: 0	R/W	0	reg_rc_perln_16pec_xbdgt_0

Table 7-693 ISP_DEC_LOSS_RC_BUDGET_1 0xbd

Bit(s)	R/W	Default	Description
31:24	R/W	0	reg_rc_perln_16pec_xbdgt_7
23:16	R/W	0	reg_rc_perln_16pec_xbdgt_6
15: 8	R/W	0	reg_rc_perln_16pec_xbdgt_5
7: 0	R/W	0	reg_rc_perln_16pec_xbdgt_4

Table 7-694 ISP_DEC_LOSS_RC_BUDGET_2 0xae

Bit(s)	R/W	Default	Description
31:24	R/W	0	reg_rc_perln_16pec_xbdgt_11
23:16	R/W	0	reg_rc_perln_16pec_xbdgt_10
15: 8	R/W	0	reg_rc_perln_16pec_xbdgt_9.
7: 0	R/W	0	reg_rc_perln_16pec_xbdgt_8

Table 7-695 ISP_DEC_LOSS_RC_BUDGET_3 0xaf

Bit(s)	R/W	Default	Description
31:24	R/W	0	reg_rc_perln_16pec_xbdgt_15
23:16	R/W	0	reg_rc_perln_16pec_xbdgt_14
15: 8	R/W	0	reg_rc_perln_16pec_xbdgt_13
7: 0	R/W	0	reg_rc_perln_16pec_xbdgt_12

Amlogic Proprietary and Confidential
Copyright © Amlogic. All rights reserved.

Table 7-696 ISP_DEC_LOSS_RC_BUDGET_4 0xb0

Bit(s)	R/W	Default	Description
31:24	R/W	0	reg_rc_perln_16pec_xbdgt_16
23:16	R/W	0	reg_rc_1stln_slice_xbdgt: extra bit budget (in pct= x/128) for the first line of the slice, no prediction from pre-line;
15: 8	R/W	0	reg_rc_2ndln_slice_xbdgt: extra bit budget (in pct= x/128) for the 2nd line of the slice, with limited prediction from pre-line;
7: 0	R/W	0	reg_rc_1stln_group_xbdgt: extra bit budget (in pct= x/128) for the first line of the group, still with prediction from pre-line;

Table 7-697 ISP_DEC_LOSS_RC_BUDGET_5 0xb1

Bit(s)	R/W	Default	Description
29:24	R/W	23	reg_rc_master_qpx2_max: maxmum qpx2 during the rc_loop
21:16	R/W	14	reg_rc_master_qpx2_min: minmum qpx2 during the rc_loop
15: 8	R/W	16	reg_rc_dynamic_speed_long: dynamic speed for using up the accumed bits, 2nd order gain of loop filter. normalized to 16 as 1;
7: 0	R/W	16	reg_rc_dynamic_speed_short: dynamic speed for using up the accumed bits, 1st order gain of loop filter. normalized to 64 as 1;

Table 7-698 ISP_DEC_LOSS_RC_BUDGET_6 0xb2

Bit(s)	R/W	Default	Description
31	R/W	0	reg_rc_precell_bits_reset: enable for bits_cell_pre reset of each group 1, bits_ cell_pre =0 0:bits_cell_pre value unchanged
28:16	R/W	240	reg_rc_dynamic_mxblk_long: maximum number of blocks in group for long term dynamic factor, if set to 0, then no limit; otherwise set limit
12: 0	R/W	240	reg_rc_qpx2_margin3_blkth:final guard margin threshold to blocks_left_in_group

Table 7-699 ISP_DEC_LOSS_RC_QP_MARGIN 0xb3

Bit(s)	R/W	Default	Description
29:16	R/W	-12	reg_rc_qpx2_margin_thd_1: threshold x16 to ibits_accum to assign extra pq margin to avoid buffer down flow
13: 0	R/W	-4	reg_rc_qpx2_margin_thd_0

Table 7-700 ISP_DEC_LOSS_RC_QP_MARGIN_1 0xb4

Bit(s)	R/W	Default	Description
29:16	R/W	8	reg_rc_qpx2_margin_thd_3
13: 0	R/W	-16	reg_rc_qpx2_margin_thd_2

Amlogic Proprietary and Confidential
Copyright © Amlogic. All rights reserved.

Table 7-701 ISP_DEC_LOSS_RC_QP_MARGIN_2 0xb5

Bit(s)	R/W	Default	Description
29:24	R/W	6	reg_rc_qpx2_margin_dlt_3: delta qp margin to qp_max when ibits_accum lower than rc_qp_margin_thd[2]
21:16	R/W	5	reg_rc_qpx2_margin_dlt_2
13: 8	R/W	3	reg_rc_qpx2_margin_dlt_1
5: 0	R/W	2	reg_rc_qpx2_margin_dlt_0

Table 7-702 ISP_DEC_LOSS_RC_QP_MARGIN_3 0xb6

Bit(s)	R/W	Default	Description
31:30	R/W	1	reg_rc_qpx2_margin_dlt_mode
27:16	R/W	250	reg_rc_fifo_qpx2_margin_thd_1: threshold to fifo to assign extra pq margin to avoid buffer down flow,
11: 0	R/W	150	reg_rc_fifo_qpx2_margin_thd_0

Table 7-703 ISP_DEC_LOSS_RC_QP_MARGIN_4 0xb7

Bit(s)	R/W	Default	Description
27:16	R/W	500	reg_rc_fifo_qpx2_margin_thd_3
11: 0	R/W	350	reg_rc_fifo_qpx2_margin_thd_2

Table 7-704 ISP_DEC_LOSS_RC_QP_MARGIN_5 0xb8

Bit(s)	R/W	Default	Description
29:24	R/W	16	reg_rc_fifo_qpx2_margin_dlt_3: delta qp margin to qp_max when fifo lower than rc_qp_margin_thd[2]
21:16	R/W	7	reg_rc_fifo_qpx2_margin_dlt_2
13: 8	R/W	5	reg_rc_fifo_qpx2_margin_dlt_1
5: 0	R/W	3	reg_rc_fifo_qpx2_margin_dlt_0

Table 7-705 ISP_DEC_LOSS_FLATNESS_ADJ0 0xb9

Bit(s)	R/W	Default	Description
31	R/W	0	reg_adjsize_flatness_flag: enable signal for the flatness mode,adj_predicted_ size should be small in flatness
30	R/W	0	reg_adjsize_complex_flag: enable signal for the complex mode,adj_predicted_ size should be large in complex
29	R/W	0	reg_rc_fifo_avgspeed_use_sbudget: enable to use s_budget_block as budget_ block: 0 use bits_perblk programable register, 1: use rc calculated s_budget_blk
28	R/W	0	reg_rc_bits_gap_dlt_down_en: to dlt_buget2x reduced based on bits_gap value
27:16	R/W	50	reg_adjsize_flatness_pixthd: area if(MAX-MIN) bigger than pixthd

Amlogic Proprietary and Confidential
Copyright © Amlogic. All rights reserved.

Bit(s)	R/W	Default	Description
12: 8	R/W	7	reg_adjsize_flatness_sizedlt: delta size margin to adj_predicted_size when adj_ predicted_size lower than reg_adjsize_flatness_sizedlt
4: 0	R/W	2	reg_adjsize_flatness_reduce: the cell is flatness and adj_predicted_size > thd, adj_predicted_size = adj_predicted_size- reg_adjsize_flatness_reduce

Table 7-706 ISP_DEC_LOSS_FLATNESS_ADJ1 0xba

Bit(s)	R/W	Default	Description
27:16	R/W	512	reg_adjsize_complex_pixthd : area if(MAX-MIN) bigger than pixthd
12: 8	R/W	7	reg_adjsize_complex_sizedlt : delta size margin to adj_predicted_size when adj_ predicted_size bigger than reg_adjsize_complex_sizedlt
4: 0	R/W	2	reg_adjsize_complex_increase: if the cell is complex and adj_predicted_size < thd,adj_predicted_size = adj_predicted_size + reg_adjsize_complex_increase

Table 7-707 ISP_DEC_LOSS_FIFO_THD_0 0xbb

Bit(s)	R/W	Default	Description
23:12	R/W	280	reg_rc_fifo_margin_thd_5:threshold of fifo level(in words=16bits) to guard the rc loop by adding delta to p_budget2x
11: 0	R/W	250	reg_rc_fifo_margin_thd_4

Table 7-708 ISP_DEC_LOSS_FIFO_THD_1 0xbc

Bit(s)	R/W	Default	Description
23:12	R/W	220	reg_rc_fifo_margin_thd_3
11: 0	R/W	165	reg_rc_fifo_margin_thd_2

Table 7-709 ISP_DEC_LOSS_FIFO_THD_2 0xbd

Bit(s)	R/W	Default	Description
23:12	R/W	145	reg_rc_fifo_margin_thd_1
11: 0	R/W	130	reg_rc_fifo_margin_thd_0

Table 7-710 ISP_DEC_LOSS_FIFO_AVG 0xbe

Bit(s)	R/W	Default	Description
25:20	R/W	12	reg_rc_fifo_margin_dlt_5: delta of fifo level to guard the rc loop by adding delta to p_budget2x
17:12	R/W	14	reg_rc_fifo_margin_dlt_4:
11: 0	R/W	80	reg_rc_fifo_avgspeed_bits_perblk: bits perblock fifo read/write speed, set to budget_block = (SIZE_BLK*(ratio_ bppx16))/16 as default

Amlogic Proprietary and Confidential
Copyright © Amlogic. All rights reserved.

Table 7-711 ISP_DEC_LOSS_FIFO_DLT 0xbf

Bit(s)	R/W	Default	Description
29:24	R/W	11	reg_rc_fifo_margin_dlt_3: delta of fifo level to guard the rc loop by adding delta to p_budget2x
21:16	R/W	8	reg_rc_fifo_margin_dlt_2
13: 8	R/W	5	reg_rc_fifo_margin_dlt_1
5: 0	R/W	2	reg_rc_fifo_margin_dlt_0

Table 7-712 ISP_DEC_LOSS_BITSGAP_THD_0 0xc0

Bit(s)	R/W	Default	Description
27:16	R/W	50	reg_rc_bits_gap_margin_thd_1: threshold of bits gap to reduced dlt_buget2x
11: 0	R/W	30	reg_rc_bits_gap_margin_thd_0

Table 7-713 ISP_DEC_LOSS_BITSGAP_THD_1 0xc1

Bit(s)	R/W	Default	Description
11: 0	R/W	82	reg_rc_bits_gap_margin_thd_2:threshold of bits gap to reduced dlt_buget2x

Table 7-714 ISP_DEC_LOSS_ICH 0xc2

Bit(s)	R/W	Default	Description
25	R/W	1	reg_ich_enable: enable signal for the ich mode.
24	R/W	1	reg_ich_error_compare_pred_en: ICH maxerror compare prediction maxerror en
20:16	R/W	5	reg_ich_max_error_sel: ICH error th sel, th = 1<<sel [0,DW-1)
12: 8	R/W	8	reg_ich_bits_weight: cost bits weight(0-16)
4: 0	R/W	8	reg_pre_bits_weight: cost bits weight (0-16)

Table 7-715 ISP_DEC_LOSS_ICH_UPTH 0xc3

Bit(s)	R/W	Default	Description
7: 0	R/W	4	reg_ich_update_th: thresh for ICH history update

Table 7-716 ISP_DEC_LOSS_LUMA 0xc4

Bit(s)	R/W	Default	Description
16	R/W	0	reg_luma_adjust_en: enable of luma(G) adjust
12: 8	R/W	1	reg_pixel_luma_adj_dlt_1: of qelvel according to luma
4: 0	R/W	2	reg_pixel_luma_adj_dlt_0:

Amlogic Proprietary and Confidential
Copyright © Amlogic. All rights reserved.

Table 7-717 ISP_DEC_LOSS_LUMA_TH 0xc5

Bit(s)	R/W	Default	Description
31:16	R/W	128	reg_pixel_luma_adj_th_1: luma level
15: 0	R/W	256	reg_pixel_luma_adj_th_0:

Table 7-718 ISP_DEC_LOSS_ACCUM_OFSET_0 0xc6

Bit(s)	R/W	Default	Description
31:24	R/W	0	reg_accum_add_ofset_2
23:16	R/W	5	reg_accum_add_ofset_1
15: 8	R/W	2	reg_accum_add_ofset_0
3: 1	R/W	2	reg_accum_ofset_shift
0	R/W	0	reg_accum_ofset_en

Table 7-719 ISP_DEC_LOSS_ACCUM_OFSET_1 0xc7

Bit(s)	R/W	Default	Description
31:24	R/W	0	reg_accum_add_ofset_6
23:16	R/W	5	reg_accum_add_ofset_5
15: 8	R/W	2	reg_accum_add_ofset_4
7: 0	R/W	0	reg_accum_add_ofset_3

Table 7-720 ISP_DEC_LOSS_ACCUM_OFSET_2 0xc8

Bit(s)	R/W	Default	Description
15: 8	R/W	255	reg_accum_add_ofset_8
7: 0	R/W	0	reg_accum_add_ofset_7

Table 7-721 ISP_DEC_LOSS_ACCUM_OFSET_3 0xc9

Bit(s)	R/W	Default	Description
11: 0	R/W	0	reg_normalize_idx_ratio

Table 7-722 ISP_DEC_LOSS_DERIVA_ADJ 0xca

Bit(s)	R/W	Default	Description
30:28	R/W	0	reg_derivative_lut_0_9: lut of derivative adjusted
26:24	R/W	0	reg_derivative_lut_0_8
22:20	R/W	0	reg_derivative_lut_0_7
18:16	R/W	0	reg_derivative_lut_0_6
14:12	R/W	0	reg_derivative_lut_0_5

Amlogic Proprietary and Confidential
Copyright © Amlogic. All rights reserved.

Bit(s)	R/W	Default	Description
10: 8	R/W	0	reg_derivative_lut_0_4
6: 4	R/W	0	reg_derivative_lut_1_9
0	R/W	0	reg_derivative_en: 1 to enable derivative adjusted

Table 7-723 ISP_DEC_LOSS_DERIVA_ADJ_1 0xcb

Bit(s)	R/W	Default	Description
30:28	R/W	0	reg_derivative_lut_1_8
26:24	R/W	0	reg_derivative_lut_1_7
22:20	R/W	0	reg_derivative_lut_1_6
18:16	R/W	0	reg_derivative_lut_1_5
14:12	R/W	0	reg_derivative_lut_2_9
10: 8	R/W	0	reg_derivative_lut_2_8
6: 4	R/W	0	reg_derivative_lut_2_7
2: 0	R/W	0	reg_derivative_lut_2_6

Table 7-724 ISP_DEC_LOSS_DERIVA_ADJ_2 0xcc

Bit(s)	R/W	Default	Description
30:28	R/W	0	reg_derivative_lut_9_5
26:24	R/W	0	reg_derivative_lut_9_4
22:20	R/W	0	reg_derivative_lut_9_3
18:16	R/W	0	reg_derivative_lut_9_2
14:12	R/W	0	reg_derivative_lut_9_1
10: 8	R/W	0	reg_derivative_lut_9_0
6: 4	R/W	0	reg_derivative_lut_8_4
2: 0	R/W	0	reg_derivative_lut_8_3

Table 7-725 ISP_DEC_LOSS_DERIVA_ADJ_3 0xcd

Bit(s)	R/W	Default	Description
30:28	R/W	0	reg_derivative_lut_8_2
26:24	R/W	0	reg_derivative_lut_8_1
22:20	R/W	0	reg_derivative_lut_8_0
18:16	R/W	0	reg_derivative_lut_7_4
14:12	R/W	0	reg_derivative_lut_7_3
10: 8	R/W	0	reg_derivative_lut_7_2

Amlogic Proprietary and Confidential
Copyright © Amlogic. All rights reserved.

Bit(s)	R/W	Default	Description
6: 4	R/W	0	reg_derivative_lut_7_1
2: 0	R/W	0	reg_derivative_lut_7_0

Table 7-726 ISP_DEC_LOSS_WDR_LINE_DELAY 0xce

Bit(s)	R/W	Default	Description
31	R/W	0	reg_wdr_mode_en: mode enable,(in this mode have line delay between long and short frame)
15: 0	R/W	4	reg_wdr_delay_line: delay between long and short frame in wdr mode

Table 7-727 ISP_DEC_LOSS_STATS_RAM_MODE 0xcf

Bit(s)	R/W	Default	Description
1	R/W	0	reg_stats_slice_rdmode: 0 to read slice according to reg_slice_num_mode
0	R/W	0	reg_stats_ram_rden: 1 to read stats ram enable

Table 7-728 ISP_DEC_LOSS_STATS_RAM_ADDR 0xd0

Bit(s)	R/W	Default	Description
8: 0	R/W	0	reg_stats_ram_addr: statistics info ram status address

Table 7-729 ISP_DEC_LOSS_RO_STATS_RAM_DATA 0xd1

Bit(s)	R/W	Default	Description
31: 0	R.O	0	ro_stats_ram_data: statistics info from ram data

Table 7-730 ISP_DEC_LOSS_MIF_CTRL 0xf0

Bit(s)	R/W	Default	Description
31:24	R/W	0	reg_sync_sel: 0 to sync with frm rst [24]: for enable [25]: for reg_canvas_id [26]: for dol mode
23:16	R/W	0	reg_canvas_id: axi canvas id num
14:12	R/W	1	reg_cmd_intr_len: interrupt send cmd when how many series axi cmd, 0=12 1= 16 2=24 3=32 4=40 5=48 6=56 7=64
9: 8	R/W	1	reg_cmd_req_size: how many room fifo have, then axi send series req, 0=16 1= 32 2=48 3=64
6: 4	R/W	3	reg_burst_len: burst type: 0->1; 1->2; 2->4; 3->8; 4->16, others reserved
2	R/W	0	reg_check_resp_id: 1 to check RESP ID
1	R/W	0	reg_dol_mode: 1: DOL mode
0	R/W	1	reg_mif_enable: 1 to enable mif

Amlogic Proprietary and Confidential
Copyright © Amlogic. All rights reserved.

Table 7-731 ISP_DEC_LOSS_MIF_QOS 0xf1

Bit(s)	R/W	Default	Description
31:0	R/W	0	reg_qos_ctrl: Qos control [18] : reg_qos_auto_en [17] : reg_qos_sup [16] : reg_qos_ini [15:8]: reg_qos_up_th [7:0]: reg_qos_dn_th

Table 7-732 ISP_DEC_LOSS_MIF_URGENT 0xf2

Bit(s)	R/W	Default	Description
31:0	R/W	0	reg_urgent_ctrl: urgent control [18] : reg_urgent_auto_en [17] : reg_urgent_sup [16] : reg_urgent_ini [15:8]: reg_urgent_up_th [7:0]: reg_urgent_dn_th

Table 7-733 ISP_DEC_LOSS_MIF_MISC 0xf3

Bit(s)	R/W	Default	Description
3	R/W	1	reg_mif_busy_noresp_check: for mif write, dont take "respond busy" as mif unit busy.
2	R/W	0	reg_mif_wait_input4busy: use in encoder, mif is busy till input data comming. only for mif wr
1	R/W	0	reg_mif_dbl_baddr_init: write 1 to use reg_mif_baddr as base-addr for next frame,it would be clear automatically.
0	R/W	0	reg_mif_dbl_baddr_en:

Table 7-734 ISP_DEC_LOSS_MIF_BADDR 0xf4

Bit(s)	R/W	Default	Description
31:0	R/W	0	reg_mif_baddr: mif base address

Table 7-735 ISP_DEC_LOSS_MIF_BADDR1 0xf5

Bit(s)	R/W	Default	Description
31:0	R/W	0	reg_mif_baddr1: mif base address

Table 7-736 ISP_DEC_LOSS_MIF_FIFO_CTRL 0xf7

Bit(s)	R/W	Default	Description
31:16	R/W	0	reg_mif_gclk_ctrl: gate clock control
7:0	R/W	128	reg_mif_fifo_size: data FIFO max size, default = 128,

Amlogic Proprietary and Confidential
Copyright © Amlogic. All rights reserved.

Table 7-737 ISP_DEC_LOSS_MIF_FRM_HOLD 0xf8

Bit(s)	R/W	Default	Description
31:0	R/W	16	reg_mif_frm_holds: clock cycle holder from frm_rst to wait register ready, default = 16 Note: set bit[31] to 1 indicates the compress would start to work till RDMA transfer finished or write [31:0] to 0xffffffff

Table 7-738 ISP_DEC_LOSS_MIF_RO_STATS 0xf9

Bit(s)	R/W	Default	Description
31: 0	R.O	0	ro_mif_status: mif status

7.13.4.3 MIPI APAPT Registers

The base address is 0xFE3B4000

Table 7-739 MIPI_ADAPT_CMPR_SPLIT_CTRL 0x00

Bit(s)	R/W	Default	Description
31:16	R/W	0	reg_split_sync_ctrl: 0 for register sync (shaddow)
3	R/W	1	reg_split_ignore_frag_cmd: ingore no used axi cmd before cmd with address = "reg_wsub0_iaddr_bgn"
1	R/W	0	reg_split_big_endian: 128bit data big_endian
0	R/W	1	reg_split_enable:1 to enable

Table 7-740 MIPI_ADAPT_CMPR_SPLIT_SIZE 0x01

Bit(s)	R/W	Default	Description
31:16	R/W	0	reg_split_gclk_ctrl: gate clock control
15:0	R/W	4608	reg_split_hsize: horizontal size

Table 7-741 MIPI_ADAPT_CMPR_SPLIT_FRMRST_CTRL 0x02

Bit(s)	R/W	Default	Description
20	R/W	1	reg_split_abort_after_cmd_1st
19	R/W	1	reg_split_internal_abort_en
18	R/W	1	reg_split_abort_hold_input
17	R/W	1	reg_split_frmrst_hold_input: 1 to hold axi input during frmrst generate, only valid for reg_frmrst_mode =0/2
16	R/W	0	reg_split_rdma_trigger_mode: 0 to use frmrst, 1 to use frame_end
15	R/W	0	reg_split_rdma_enable: 1 to enable RDMA
13	R/W	0	reg_split_frmrst_hold4abort_mode: 1 to start frmrst delay counter caused by abort after enc path idle.

Amlogic Proprietary and Confidential
Copyright © Amlogic. All rights reserved.

Bit(s)	R/W	Default	Description
12	R/W	0	reg_split_frmrst_hold4gen_mode: 1 to start frmrst delay counter after enc path idle.
11	R/W	0	reg_split_dis_abort: disable abnormal abort processing.
10	R/W	0	reg_split_dis_frmrst_by_abort: disable frmrst generate caused by abnormal abort
9	R/W	1	reg_split_wait_idle_for_abort: wait enc path idle before frmrst generate cause by abnormal abort.
8	R/W	1	reg_split_wait_idle_for_frmrst: wait enc path idle before frmrst generate.
5 : 4	R/W	0	reg_split_frmrst_mode:frmrst mode, 0:use input frmrst; 1:use reg_soft_frmrst; 2: use axi iaddr_end to generate; 3: use iaddr_bgn to generate
0	R/W	0	reg_split_soft_frmrst: write 1 to generate a soft frmrst

Table 7-742 MIPI_ADAPT_CMPR_SPLIT_FRMRST_DLY0 0x03

Bit(s)	R/W	Default	Description
31:0	R/W	0	reg_split_frmrst_dlys4gen: clock delays for frmrst generate except caused by "abnormal abort"

Table 7-743 MIPI_ADAPT_CMPR_SPLIT_FRMRST_DLY1 0x04

Bit(s)	R/W	Default	Description
31:0	R/W	16	reg_split_frmrst_dlys4abort: clock delays for frmrst generate caused by "abnormal abort"

Table 7-744 MIPI_ADAPT_CMPR_SPLIT_FRMHOLD 0x05

Bit(s)	R/W	Default	Description
31:0	R/W	16	reg_split_frm_holds: clock cycle holder from frm_rst,to wait register ready, default = 16

Table 7-745 MIPI_ADAPT_CMPR_RO_SPLIT_STATS 0x07

Bit(s)	R/W	Default	Description
31:0	R.O	0	ro_split_status

Table 7-746 MIPI_ADAPT_CMPR_WSUB0_CTRL 0x08

Bit(s)	R/W	Default	Description
20	R/W	0	reg_wsub0_raw67_ext:
18:16	R/W	1	reg_wsub0_raw_mode: raw6/7/8/10/12/14
9 : 0	R/W	32	reg_wsub0_dfifo_size: data FIFO size

Amlogic Proprietary and Confidential
Copyright © Amlogic. All rights reserved.

Table 7-747 MIPI_ADAPT_CMPR_WSUB0_IADDRS 0x09

Bit(s)	R/W	Default	Description
31:0	R/W	0	reg_wsub0_iaddr_bgn: start address for WSUB0

Table 7-748 MIPI_ADAPT_CMPR_WSUB0_IADDRE 0x0a

Bit(s)	R/W	Default	Description
31:0	R/W	0	reg_wsub0_iaddr_end: end address for WSUB0

Table 7-749 MIPI_ADAPT_CMPR_PACK_CTRL 0x10

Bit(s)	R/W	Default	Description
31:16	R/W	0	reg_pack_sync_ctrl: register sync (shaddow) ctrl
6	R/W	0	reg_pack_skip_flag_init: skip flag for pack, 1 to skip pack axi cmd for current frame
5	R/W	0	reg_pack_skip_auto_ctrl: auto control for skip flag, if 1, the 1st frame use the reg_pack_skip_init as skip flag, and the next frames use 0 for skip flag
3	R/W	1	reg_pack_ignore_frag_cmd: ingore no used axi cmd before cmd with address = "reg_rsub0_iaddr_bgn"
1	R/W	0	reg_pack_big_endian: Big_endian
0	R/W	1	reg_pack_enable: 1 to enable

Table 7-750 MIPI_ADAPT_CMPR_PACK_SIZE 0x11

Bit(s)	R/W	Default	Description
31:16	R/W	0	reg_pack_gclk_ctrl: gate clock control
15:0	R/W	4608	reg_pack_hsize: hsize

Table 7-751 MIPI_ADAPT_CMPR_PACK_FRMRST_CTRL 0x12

Bit(s)	R/W	Default	Description
24	R/W	0	reg_pack_busy_care_rdmif : 1 to take rdmif busy as pack busy
20	R/W	1	reg_pack_abort_after_cmd_1st :
19	R/W	1	reg_pack_internal_abort_en :
18	R/W	1	reg_pack_abort_hold_input :
17	R/W	1	reg_pack_frmrst_hold_input: 1 to hold axi input during frmrst generate, only valid for reg_frmrst_mode =0/2
16	R/W	0	reg_pack_rdma_trigger_mode: 0 to use frmrst, 1 to use frame_end
15	R/W	0	reg_pack_rdma_enable: 1 to enable RDMA
13	R/W	0	reg_pack_frmrst_hold4abort_mode: 1 to start frmrst delay counter caused by abort after enc path idle.
12	R/W	0	reg_pack_frmrst_hold4gen_mode:1 to start frmrst delay counter after enc path idle.

Amlogic Proprietary and Confidential
Copyright © Amlogic. All rights reserved.

Bit(s)	R/W	Default	Description
11	R/W	0	reg_pack_dis_abort: disable abnormal abort processing.
10	R/W	0	reg_pack_dis_frmrst_by_abort: disable frmrst generate caused by abnormal abort
9	R/W	1	reg_pack_wait_idle_for_abort: wait enc path idle before frmrst generate cause by abnormal abort.
8	R/W	1	reg_pack_wait_idle_for_frmrst: wait enc path ready before frmrst generate.
5 : 4	R/W	0	reg_pack_frmrst_mode: frmrst mode, 0:use input frmrst; 1:use reg_soft_frmrst; 2: use axi iaddr_end to generate; 3: use iaddr_bgn to generate
0	R/W	0	reg_pack_soft_frmrst: write 1 to generate a soft frmrst

Table 7-752 MIPI_ADAPT_CMPR_PACK_FRMRST_DLY0 0x13

Bit(s)	R/W	Default	Description
31:0	R/W	0	reg_pack_frmrst_dlys4gen: clock delays for frmrst generate except caused by "abnormal abort"

Table 7-753 MIPI_ADAPT_CMPR_PACK_FRMRST_DLY1 0x14

Bit(s)	R/W	Default	Description
31:0	R/W	16	reg_pack_frmrst_dlys4abort: clock delays for frmrst generate caused by "abnormal abort"

Table 7-754 MIPI_ADAPT_CMPR_PACK_FRMHOLD 0x15

Bit(s)	R/W	Default	Description
31:0	R/W	16	reg_pack_frm_holds: clock cycle holder from frm_rst,to wait register ready, default = 16

Table 7-755 MIPI_ADAPT_CMPR_RO_PACK_STATS 0x17

Bit(s)	R/W	Default	Description
31:0	R.O	0	ro_pack_status:

Table 7-756 MIPI_ADAPT_CMPR_RSUB0_CTRL 0x18

Bit(s)	R/W	Default	Description
20	R/W	0	reg_rsub0_raw67_ext,
18:16	R/W	1	reg_rsub0_raw_mode: raw6/7/8/10/12/14
9 : 0	R/W	32	reg_rsub0_dfifo_size: Data FIFO size

Table 7-757 MIPI_ADAPT_CMPR_RSUB0_IADDRS 0x19

Bit(s)	R/W	Default	Description
31:0	R/W	0	reg_rsub0_iaddr_bgn: start address for RSUB0

Amlogic Proprietary and Confidential
Copyright © Amlogic. All rights reserved.

Table 7-758 MIPI_ADAPT_CMPR_RSUB0_IADDRE 0x1a

Bit(s)	R/W	Default	Description
31:0	R/W	0	reg_rsub0_iaddr_end: end address for RSUB0

Table 7-759 MIPI_ADAPT_CMPR_INT_EN 0x20

Bit(s)	R/W	Default	Description
31:0	R/W	0	reg_adapt_int_en: interrupt mask

Table 7-760 MIPI_ADAPT_CMPR_RO_INT_STATUS 0x21

Bit(s)	R/W	Default	Description
31:0	R.O	0x0	ro_adapt_int_status: interrupt status, write 1 to clear : TNR RSUB (for compress dec) RDMA END : TNR WSUB (for compress enc) RDMA END : RSUB (dec) internal frm_rst generate : RSUB (dec) abort occured : RSUB(dec) frame end : WSUB (enc) internal frm_rst generate : WSUB (enc) abort occured [2] : WSUB(enc) frame end

7.13.4.4 MIPI TNR_CMPR Registers

The base address is 0xFE3B4800

Table 7-761 MIPI_TNR_CMPR_SPLIT_CTRL 0x00

Bit(s)	R/W	Default	Description
31:16	R/W	0	reg_split_sync_ctrl: 0 for register sync (shaddow)
3	R/W	1	reg_split_ignore_frag_cmd: ignore no used axi cmd before cmd with address = iaddr_bgn
2	R/W	1	reg_split_tnr_temp3_en: 1 to indicate TNR works in Temp3 mode
1	R/W	0	reg_split_big_endian: 128bit data big_endian
0	R/W	1	reg_split_enable: 1 to enable

Table 7-762 MIPI_TNR_CMPR_SPLIT_SIZE 0x01

Bit(s)	R/W	Default	Description
31:16	R/W	0	reg_split_gclk_ctrl: gate clock control
15:0	R/W	4608	reg_split_hsize: horizontal size

Amlogic Proprietary and Confidential
Copyright © Amlogic. All rights reserved.

Table 7-763 MIPI_TNR_CMPR_SPLIT_FRMRST_CTRL 0x02

Bit(s)	R/W	Default	Description
25	R/W	0	reg_split_addrs_cnt_mode: 1 to hold in_abort after all sub addrs come, otherwise one sub addrs is ok.
20	R/W	1	reg_split_abort_after_cmd_1st :
19	R/W	1	reg_split_internal_abort_en:
18	R/W	1	reg_split_abort_hold_input:
17	R/W	1	reg_split_frmrst_hold_input: 1 to hold axi input during frmrst generate
16	R/W	0	reg_split_rdma_trigger_mode: 0 to use frmrst, 1 to use frame_end
15	R/W	0	reg_split_rdma_enable: 1 to enable RDMA
13	R/W	0	reg_split_frmrst_hold4abort_mode: 1 to start frmrst delay counter caused by abort after enc path idle.
12	R/W	0	reg_split_frmrst_hold4gen_mode: 1 to start frmrst delay counter after enc path idle.
11	R/W	0	reg_split_dis_abort: disable abnormal abort processing.
10	R/W	0	reg_split_dis_frmrst_by_abort: disable frmrst generate caused by abnormal abort
9	R/W	1	reg_split_wait_idle_for_abort: wait enc path idle before frmrst generate cause by abnormal abort.
8	R/W	1	reg_split_wait_idle_for_frmrst: wait enc path idle before frmrst generate.
5 : 4	R/W	0	reg_split_frmrst_mode: frmrst mode, 0:use input frmrst; 1:use reg_soft_frmrst; 2: use axi iaddr_end to generate; 3: use iaddr_bgn to generate
0	R/W	0	reg_split_soft_frmrst: write 1 to generate a soft frmrst

Table 7-764 MIPI_TNR_CMPR_SPLIT_FRMRST_DLY0 0x03

Bit(s)	R/W	Default	Description
31:0	R/W	0	reg_split_frmrst_dlys4gen: clock delays for frmrst generate except caused by "-abnormal abort"

Table 7-765 MIPI_TNR_CMPR_SPLIT_FRMRST_DLY1 0x04

Bit(s)	R/W	Default	Description
31:0	R/W	16	reg_split_frmrst_dlys4abort: clock delays for frmrst generate caused by "-abnormal abort"

Table 7-766 MIPI_TNR_CMPR_SPLIT_FRMHOLD 0x05

Bit(s)	R/W	Default	Description
31:0	R/W	16	reg_split_frm_holds: clock cycle holder from frm_rst,to wait register ready, default = 16

Amlogic Proprietary and Confidential
Copyright © Amlogic. All rights reserved.

Table 7-767 MIPI_TNR_CMPR_RO_SPLIT_STATS 0x07

Bit(s)	R/W	Default	Description
31:0	R.O	0	ro_split_status

Table 7-768 MIPI_TNR_CMPR_WSUB0_CTRL 0x08

Bit(s)	R/W	Default	Description
16	R/W	1	reg_wsub0_bit16_mode: 0 for 12bit mode; 1 for 16bit mode
9 : 0	R/W	128	reg_wsub0_dfifo_size: Data FIFO size

Table 7-769 MIPI_TNR_CMPR_WSUB0_IADDRS 0x09

Bit(s)	R/W	Default	Description
31:0	R/W	0	reg_wsub0_iaddr_bgn: start address for WSUB0

Table 7-770 MIPI_TNR_CMPR_WSUB0_IADDRE 0x0a

Bit(s)	R/W	Default	Description
31:0	R/W	0	reg_wsub0_iaddr_end: end address for WSUB0

Table 7-771 MIPI_TNR_CMPR_WSUB1_CTRL 0x0b

Bit(s)	R/W	Default	Description
16	R/W	1	reg_wsub1_bit16_mode: 0 for 12bit mode; 1 for 16bit mode
9 : 0	R/W	128	reg_wsub1_dfifo_size : Data FIFO size

Table 7-772 MIPI_TNR_CMPR_WSUB1_IADDRS 0x0c

Bit(s)	R/W	Default	Description
31:0	R/W	0	reg_wsub1_iaddr_bgn: start address for WSUB1

Table 7-773 MIPI_TNR_CMPR_WSUB1_IADDRE 0x0d

Bit(s)	R/W	Default	Description
31:0	R/W	0	reg_wsub1_iaddr_end: end address for WSUB1

Table 7-774 MIPI_TNR_CMPR_PACK_CTRL 0x10

Bit(s)	R/W	Default	Description
31:16	R/W	0	reg_pack_sync_ctrl: register sync (shaddow) ctrl
6	R/W	0	reg_pack_skip_flag_init: skip flag for pack, 1 to skip pack axi cmd for current frame

Amlogic Proprietary and Confidential
Copyright © Amlogic. All rights reserved.

Bit(s)	R/W	Default	Description
5	R/W	0	reg_pack_skip_auto_ctrl: auto control for skip flag, if 1, the 1st frame use the reg_pack_skip_init as skip flag, and the next frames use 0 for skip flag
4	R/W	1	reg_pack_keep_axicmd_order: 1 to keep axi rdata cmd order same as axi cmd order
3	R/W	1	reg_pack_ignore_frag_cmd: ingore no used axi cmd before cmd with address = iaddr_bgn
2	R/W	1	reg_pack_tnr_temp3_en: 1 to indicate TNR works in Temp3 mode
1	R/W	0	reg_pack_big_endian: Big_endian
0	R/W	1	reg_pack_enable: 1 to enable

Table 7-775 MIPI_TNR_CMPR_PACK_SIZE 0x11

Bit(s)	R/W	Default	Description
31:16	R/W	0	reg_pack_gclk_ctrl: gate clock size
15:0	R/W	4608	reg_pack_hsize: hsize

Table 7-776 MIPI_TNR_CMPR_PACK_FRMRST_CTRL 0x12

Bit(s)	R/W	Default	Description
25	R/W	0	reg_pack_addrs_cnt_mode: 1 to hold in_abort after all sub addrs come, otherwise one sub addrs is ok.
24	R/W	0	reg_pack_busy_care_rdmif: 1 to take rdmif busy as pack busy
20	R/W	1	reg_pack_abort_after_cmd_1st:
19	R/W	1	reg_pack_internal_abort_en:
18	R/W	1	reg_pack_abort_hold_input:
17	R/W	1	reg_pack_frmrst_hold_input: 1 to hold axi input during frmrst generate, only valid for reg_frmrst_mode =0/2
16	R/W	0	reg_pack_rdma_trigger_mode: 0 to use frmrst, 1 to use frame_end
15	R/W	0	reg_pack_rdma_enable: 1 to enable RDMA
13	R/W	0	reg_pack_frmrst_hold4abort_mode: 1 to start frmrst delay counter caused by abort after enc path idle.
12	R/W	0	reg_pack_frmrst_hold4gen_mode: 1 to start frmrst delay counter after enc path idle.
11	R/W	0	reg_pack_dis_abort: disable abnormal abort processing.
10	R/W	0	reg_pack_dis_frmrst_by_abort : disable frmrst generate caused by abnormal abort
9	R/W	1	reg_pack_wait_idle_for_abort : wait enc path idle before frmrst generate cause by abnormal abort.
8	R/W	1	reg_pack_wait_idle_for_frmrst: wait enc path ready before frmrst generate.
5 : 4	R/W	0	reg_pack_frmrst_mode: frmrst mode, 0:use input frmrst; 1:use reg_soft_frmrst; 2: use axi iaddr_end to generate; 3: use iaddr_bgn to generate
0	R/W	0	reg_pack_soft_frmrst: write 1 to generate a soft frmrst

Amlogic Proprietary and Confidential
Copyright © Amlogic. All rights reserved.

Table 7-777 MIPI_TNR_CMPR_PACK_FRMRST_DLY0 0x13

Bit(s)	R/W	Default	Description
31:0	R/W	0	reg_pack_frmrst_dlys4gen: clock delays for frmrst generate except caused by "-abnormal abort"

Table 7-778 MIPI_TNR_CMPR_PACK_FRMRST_DLY1 0x14

Bit(s)	R/W	Default	Description
31:0	R/W	16	reg_pack_frmrst_dlys4abort: clock delays for frmrst generate caused by "-abnormal abort"

Table 7-779 MIPI_TNR_CMPR_PACK_FRMHOLD 0x15

Bit(s)	R/W	Default	Description
31:0	R/W	16	reg_pack_frm_holds: clock cycle holder from frm_rst,to wait register ready, default = 16

Table 7-780 MIPI_TNR_CMPR_RO_PACK_STATS 0x17

Bit(s)	R/W	Default	Description
31:0	R.O	0	ro_pack_status

Table 7-781 MIPI_TNR_CMPR_RSUB0_CTRL 0x18

Bit(s)	R/W	Default	Description
16	R/W	1	reg_rsub0_bit16_mode: 0 for 12 bit mode, 1 for 16 bit mode
9 : 0	R/W	128	reg_rsub0_dfifo_size: Data FIFO size

Table 7-782 MIPI_TNR_CMPR_RSUB0_IADDRS 0x19

Bit(s)	R/W	Default	Description
31:0	R/W	0	reg_rsub0_iaddr_bgn: start address for RSUB0

Table 7-783 MIPI_TNR_CMPR_RSUB0_IADDRE 0x1a

Bit(s)	R/W	Default	Description
31:0	R/W	0	reg_rsub0_iaddr_end: end address for RSUB0

Table 7-784 MIPI_TNR_CMPR_RSUB1_CTRL 0x1b

Bit(s)	R/W	Default	Description
16	R/W	1	reg_rsub1_bit16_mode : 0 for 12 bit mode, 1 for 16 bit mode
9 : 0	R/W	128	reg_rsub1_dfifo_size: Data FIFO size

Amlogic Proprietary and Confidential
Copyright © Amlogic. All rights reserved.

Table 7-785 MIPI_TNR_CMPR_RSUB1_IADDRS 0x1c

Bit(s)	R/W	Default	Description
31:0	R/W	0	reg_rsub1_iaddr_bgn: start address for RSUB1

Table 7-786 MIPI_TNR_CMPR_RSUB1_IADDRE 0x1d

Bit(s)	R/W	Default	Description
31:0	R/W	0	reg_rsub1_iaddr_end: end address for RSUB1

Table 7-787 MIPI_TNR_CMPR_INT_EN 0x20

Bit(s)	R/W	Default	Description
31:0	R/W	0	reg_tnr_int_en: interrupt mask

Table 7-788 MIPI_TNR_CMPR_RO_INT_STATUS 0x21

Bit(s)	R/W	Default	Description
31:0	R.O	0	ro_tnr_int_status: interrupt status, write 1 to clear : TNR RSUB (for compress dec) RDMA END : TNR WSUB (for compress enc) RDMA END : RSUB (dec) internal frm_rst generate : RSUB (dec) abort occured : RSUB(dec) frame end : WSUB (enc) internal frm_rst generate : WSUB (enc) abort occured [2] : WSUB(enc) frame end

Table 7-789 MIPI_TNR_META_WSUB0_MIF_CTRL 0x80

Bit(s)	R/W	Default	Description
31:24	R/W	0	reg_meta_wsub0_sync_sel: sync with frm rst
23:16	R/W	0	reg_meta_wsub0_canvas_id: axi canvas id num
14:12	R/W	1	reg_meta_wsub0_cmd_intr_len: interrupt send cmd when how many series axi cmd, 0=12 1=16 2=24 3=32 4=40 5=48 6=56 7=64
9: 8	R/W	1	reg_meta_wsub0_cmd_req_size: how many room fifo have, then axi send series req, 0=16 1=32 2=24 3=64
6: 4	R/W	3	reg_meta_wsub0_burst_len: burst type: 0->1; 1->2; 2->4; 3->8; 4->16, others reserved
2	R/W	0	reg_meta_wsub0_check_resp_id:
0	R/W	1	reg_meta_wsub0_mif_enable: 1 to enable mif

Amlogic Proprietary and Confidential
Copyright © Amlogic. All rights reserved.

Table 7-790 ISP_TNR_META_WSUB0_MIF_QOS 0x81

Bit(s)	R/W	Default	Description
31:0	R/W	0	reg_meta_wsub0_qos_ctrl: Qos control [18] : reg_qos_auto_en [17] : reg_qos_sup [16] : reg_qos_ini [15:8]: reg_qos_up_th [7:0]: reg_qos_dn_th

Table 7-791 MIPI_TNR_META_WSUB0_MIF_URGENT 0x82

Bit(s)	R/W	Default	Description
31:0	R/W	0	reg_meta_wsub0_urgent_ctrl: urgent control [18] : reg_urgent_auto_en [17] : reg_urgent_sup [16] : reg_urgent_ini [15:8]: reg_urgent_up_th [7:0]: reg_urgent_dn_th

Table 7-792 MIPI_TNR_META_WSUB0_MIF_MISC 0x83

Bit(s)	R/W	Default	Description
3	R/W	1	reg_meta_wsub0_mif_busy_noresp_check: for mif write, dont take "respond busy" as mif unit busy.
2	R/W	0	reg_meta_wsub0_mif_wait_input4busy: use in encoder, mif is busy till input data comming.
1	R/W	0	reg_meta_wsub0_mif_dbl_baddr_init:1 to use reg_mif_baddr as base-addr for next frame,it would be clear automatically
0	R/W	0	reg_meta_wsub0_mif_dbl_baddr_en: 1 to use ping-pong base-addr based on frame.

Table 7-793 MIPI_TNR_META_WSUB0_MIF_BADDR 0x84

Bit(s)	R/W	Default	Description
31:0	R/W	0	reg_meta_wsub0_mif_baddr: mif base address

Table 7-794 MIPI_TNR_META_WSUB0_MIF_BADDR1 0x85

Bit(s)	R/W	Default	Description
31:0	R/W	0	reg_meta_wsub0_mif_baddr1: mif base address

Table 7-795 MIPI_TNR_META_WSUB0_MIF_SIZE 0x86

Bit(s)	R/W	Default	Description
23:0	R/W	0	reg_meta_wsub0_mif_size: mif trnasfer size, based on 128bits

Amlogic Proprietary and Confidential
Copyright © Amlogic. All rights reserved.

Table 7-796 MIPI_TNR_META_WSUB0_MIF_FIFO 0x87

Bit(s)	R/W	Default	Description
31:16	R/W	0	reg_meta_wsub0_mif_gclk_ctrl: gate clock control
7 :0	R/W	128	reg_meta_wsub0_mif_fifo_size: data FIFO ize

Table 7-797 MIPI_TNR_META_WSUB0_MIF_FRMHOLD 0x88

Bit(s)	R/W	Default	Description
31:0	R/W	16	reg_meta_wsub0_mif_frm_holds:generate mif_start after reg_mif_frm_holds clock cycle from frm_rst

Table 7-798 MIPI_TNR_META_WSUB0_MIF_RO_STATS 0x89

Bit(s)	R/W	Default	Description
31: 0	R.O	0	ro_meta_wsub0_mif_status: mif status

Table 7-799 MIPI_TNR_META_WSUB1_MIF_CTRL 0x90

Bit(s)	R/W	Default	Description
31:24	R/W	0	reg_meta_wsub1_sync_sel: sync with frm rst
23:16	R/W	0	reg_meta_wsub1_canvas_id: axi canvas id num
14:12	R/W	1	reg_meta_wsub1_cmd_intr_len: interrupt send cmd when how many series axi cmd, 0=12 1=16 2=24 3=32 4=40 5=48 6=56 7=64
9: 8	R/W	1	reg_meta_wsub1_cmd_req_size: how many room fifo have, then axi send series req, 0=16 1=32 2=24 3=64
6: 4	R/W	3	reg_meta_wsub1_burst_len: burst type: 0->1; 1->2; 2->4; 3->8; 4->16, others reserved
2	R/W	0	reg_meta_wsub1_check_resp_id:
0	R/W	1	reg_meta_wsub1_mif_enable: 1 to enable mif

Table 7-800 ISP_TNR_META_WSUB1_MIF_QOS 0x91

Bit(s)	R/W	Default	Description
31:0	R/W	0	reg_meta_wsub1_qos_ctrl: Qos control [18] : reg_qos_auto_en [17] : reg_qos_sup [16] : reg_qos_ini [15:8]: reg_qos_up_th [7:0]: reg_qos_dn_th

Amlogic Proprietary and Confidential
Copyright © Amlogic. All rights reserved.

Table 7-801 MIPI_TNR_META_WSUB1_MIF_URGENT 0x92

Bit(s)	R/W	Default	Description
31:0	R/W	0	reg_meta_wsub1_urgent_ctrl: urgent control [18] : reg_urgent_auto_en [17] : reg_urgent_sup [16] : reg_urgent_ini [15:8]: reg_urgent_up_th [7:0]: reg_urgent_dn_th

Table 7-802 MIPI_TNR_META_WSUB1_MIF_MISC 0x93

Bit(s)	R/W	Default	Description
3	R/W	1	reg_meta_wsub1_mif_busy_noresp_check: for mif write, dont take "respond busy" as mif unit busy.
2	R/W	0	reg_meta_wsub1_mif_wait_input4busy: use in encoder, mif is busy till input data comming.
1	R/W	0	reg_meta_wsub1_mif_dbl_baddr_init: 1 to use reg_mif_baddr as base-addr for next frame,it would be clear automatically
0	R/W	0	reg_meta_wsub1_mif_dbl_baddr_en: 1 to use ping-pong base-addr based on frame.

Table 7-803 MIPI_TNR_META_WSUB1_MIF_BADDR 0x94

Bit(s)	R/W	Default	Description
31:0	R/W	0	reg_meta_wsub1_mif_baddr: mif base address

Table 7-804 MIPI_TNR_META_WSUB1_MIF_BADDR1 0x95

Bit(s)	R/W	Default	Description
31:0	R/W	0	reg_meta_wsub1_mif_baddr1: mif base address

Table 7-805 MIPI_TNR_META_WSUB1_MIF_SIZE 0x96

Bit(s)	R/W	Default	Description
23:0	R/W	0	reg_meta_wsub1_mif_size: mif trnasfer size, based on 128bits

Table 7-806 MIPI_TNR_META_WSUB1_MIF_FIFO 0x97

Bit(s)	R/W	Default	Description
31:16	R/W	0	reg_meta_wsub1_mif_gclk_ctrl: gate clock control
7 :0	R/W	64	reg_meta_wsub1_mif_fifo_size: data FIFO size

Amlogic Proprietary and Confidential
Copyright © Amlogic. All rights reserved.

Table 7-807 MIPI_TNR_META_WSUB1_MIF_FRMHOLD 0x98

Bit(s)	R/W	Default	Description
31:0	R/W	16	reg_meta_wsub1_mif_frm_holds: generate mif_start after reg_mif_frm_holds clock cycle from frm_rst

Table 7-808 MIPI_TNR_META_WSUB1_MIF_RO_STATS 0x99

Bit(s)	R/W	Default	Description
31: 0	R.O	0	ro_meta_wsub1_mif_status: mif status

Table 7-809 MIPI_TNR_META_RSUB0_MIF_CTRL 0xa0

Bit(s)	R/W	Default	Description
31:24	R/W	0	reg_meta_rsub0_sync_sel: sync with frm rst
23:16	R/W	0	reg_meta_rsub0_canvas_id: axi canvas id num
14:12	R/W	1	reg_meta_rsub0_cmd_intr_len: interrupt send cmd when how many series axi cmd, 0=12 1=16 2=24 3=32 4=40 5=48 6=56 7=64
9: 8	R/W	1	reg_meta_rsub0_cmd_req_size: how many room fifo have, then axi send series req, 0=16 1=32 2=24 3=64
6: 4	R/W	3	reg_meta_rsub0_burst_len: burst type: 0->1; 1->2; 2->4; 3->8; 4->16, others reserved
2	R/W	0	reg_meta_rsub0_check_resp_id:
0	R/W	1	reg_meta_rsub0_mif_enable: 1 to enable mif

Table 7-810 ISP_TNR_META_RSUB0_MIF_QOS 0xa1

Bit(s)	R/W	Default	Description
31:0	R/W	0	reg_meta_rsub0_qos_ctrl: Qos control [18] : reg_qos_auto_en [17] : reg_qos_sup [16] : reg_qos_ini [15:8]: reg_qos_up_th [7:0]: reg_qos_dn_th

Table 7-811 MIPI_TNR_META_RSUB0_MIF_URGENT 0xa2

Bit(s)	R/W	Default	Description
31:0	R/W	0	reg_meta_rsub0_urgent_ctrl: urgent control [18] : reg_urgent_auto_en [17] : reg_urgent_sup [16] : reg_urgent_ini [15:8]: reg_urgent_up_th [7:0]: reg_urgent_dn_th

Amlogic Proprietary and Confidential
Copyright © Amlogic. All rights reserved.

Table 7-812 MIPI_TNR_META_RSUB0_MIF_MISC 0xa3

Bit(s)	R/W	Default	Description
1	R/W	0	reg_meta_rsub0_mif_dbl_baddr_init: 1 to use reg_mif_baddr as base-addr for next frame,it would be clear automatically
0	R/W	0	reg_meta_rsub0_mif_dbl_baddr_en: 1 to use ping-pong base-addr based on frame.

Table 7-813 MIPI_TNR_META_RSUB0_MIF_BADDR 0xa4

Bit(s)	R/W	Default	Description
31:0	R/W	0	reg_meta_rsub0_mif_baddr: mif base address

Table 7-814 MIPI_TNR_META_RSUB0_MIF_BADDR1 0xa5

Bit(s)	R/W	Default	Description
31:0	R/W	0	reg_meta_rsub0_mif_baddr1: mif base address

Table 7-815 MIPI_TNR_META_RSUB0_MIF_SIZE 0xa6

Bit(s)	R/W	Default	Description
23:0	R/W	0	reg_meta_rsub0_mif_size: mif trnasfer size, based on 128bits

Table 7-816 MIPI_TNR_META_RSUB0_MIF_FIFO 0xa7

Bit(s)	R/W	Default	Description
31:16	R/W	0	reg_meta_rsub0_mif_gclk_ctrl: gate clock control
7 :0	R/W	64	reg_meta_rsub0_mif_fifo_size: data FIFO size

Table 7-817 MIPI_TNR_META_RSUB0_MIF_FRMHOLD 0xa8

Bit(s)	R/W	Default	Description
31:0	R/W	16	reg_meta_rsub0_mif_frm_holds: clock cycle holder from frm_rst to wait register ready

Table 7-818 MIPI_TNR_META_RSUB0_MIF_RO_STATS 0xa9

Bit(s)	R/W	Default	Description
31: 0	R.O	0	ro_meta_rsub0_mif_status: mif status

Table 7-819 MIPI_TNR_META_RSUB1_MIF_CTRL 0xb0

Bit(s)	R/W	Default	Description
31:24	R/W	0	reg_meta_rsub1_sync_sel: sync with frm rst
23:16	R/W	0	reg_meta_rsub1_canvas_id: axi canvas id num

Amlogic Proprietary and Confidential
Copyright © Amlogic. All rights reserved.

Bit(s)	R/W	Default	Description
14:12	R/W	1	reg_meta_rsub1_cmd_intr_len: interrupt send cmd when how many series axi cmd, 0=12 1=16 2=24 3=32 4=40 5=48 6=56 7=64
9: 8	R/W	1	reg_meta_rsub1_cmd_req_size: how many room fifo have, then axi send series req, 0=16 1=32 2=24 3=64
6: 4	R/W	3	reg_meta_rsub1_burst_len: burst type: 0->1; 1->2; 2->4; 3->8; 4->16, others reserved
2	R/W	0	reg_meta_rsub1_check_resp_id:
0	R/W	1	reg_meta_rsub1_mif_enable: 1 to enable mif

Table 7-820 ISP_TNR_META_RSUB1_MIF_QOS 0xb1

Bit(s)	R/W	Default	Description
31:0	R/W	0	reg_meta_rsub1_qos_ctrl: Qos control [18] : reg_qos_auto_en [17] : reg_qos_sup [16] : reg_qos_ini [15:8]: reg_qos_up_th [7:0]: reg_qos_dn_th

Table 7-821 MIPI_TNR_META_RSUB1_MIF_URGENT 0xb2

Bit(s)	R/W	Default	Description
31:0	R/W	0	reg_meta_rsub1_urgent_ctrl: urgent control [18] : reg_urgent_auto_en [17] : reg_urgent_sup [16] : reg_urgent_ini [15:8]: reg_urgent_up_th [7:0]: reg_urgent_dn_th

Table 7-822 MIPI_TNR_META_RSUB1_MIF_MISC 0xb3

Bit(s)	R/W	Default	Description
1	R/W	0	reg_meta_rsub1_mif_dbl_baddr_init: 1 to use reg_mif_baddr as base-addr for next frame,it would be clear automatically
0	R/W	0	reg_meta_rsub1_mif_dbl_baddr_en: 1 to use ping-pong base-addr based on frame.

Table 7-823 MIPI_TNR_META_RSUB1_MIF_BADDR 0xb4

Bit(s)	R/W	Default	Description
31:0	R/W	0	reg_meta_rsub1_mif_baddr: mif base address

Table 7-824 MIPI_TNR_META_RSUB1_MIF_BADDR1 0xb5

Bit(s)	R/W	Default	Description
31:0	R/W	0	reg_meta_rsub1_mif_baddr1: mif base address

Amlogic Proprietary and Confidential
Copyright © Amlogic. All rights reserved.

Table 7-825 MIPI_TNR_META_RSUB1_MIF_SIZE 0xb6

Bit(s)	R/W	Default	Description
23:0	R/W	0	reg_meta_rsub1_mif_size: mif trnasfer size, based on 128bits

Table 7-826 MIPI_TNR_META_RSUB1_MIF_FIFO 0xb7

Bit(s)	R/W	Default	Description
31:16	R/W	0	reg_meta_rsub1_mif_gclk_ctrl: gate clock control
7 :0	R/W	128	reg_meta_rsub1_mif_fifo_size: data FIFO size

Table 7-827 MIPI_TNR_META_RSUB1_MIF_FRMHOLD 0xb8

Bit(s)	R/W	Default	Description
31:0	R/W	16	reg_meta_rsub1_mif_frm_holds:clock cycle holder from frm_rst,to wait register ready

Table 7-828 MIPI_TNR_META_RSUB1_MIF_RO_STATS 0xb9

Bit(s)	R/W	Default	Description
31: 0	R.O	0	ro_meta_rsub1_mif_status: mif status

7.14 Mailbox

7.14.1 Overview

There are 32 mailboxes with the following features:

- Each mailbox includes set_irq, clr_irq and 32x32 bits buffer;
- Each mailbox can be configured the access permission;
- The total 64 irqs (32 set and 32 clr) can be configured the destination;
- All configurable register are TEE W/R only;

Amlogic Proprietary and Confidential
Copyright © Amlogic. All rights reserved.

Figure 7-32 Mailbox Top Diagram

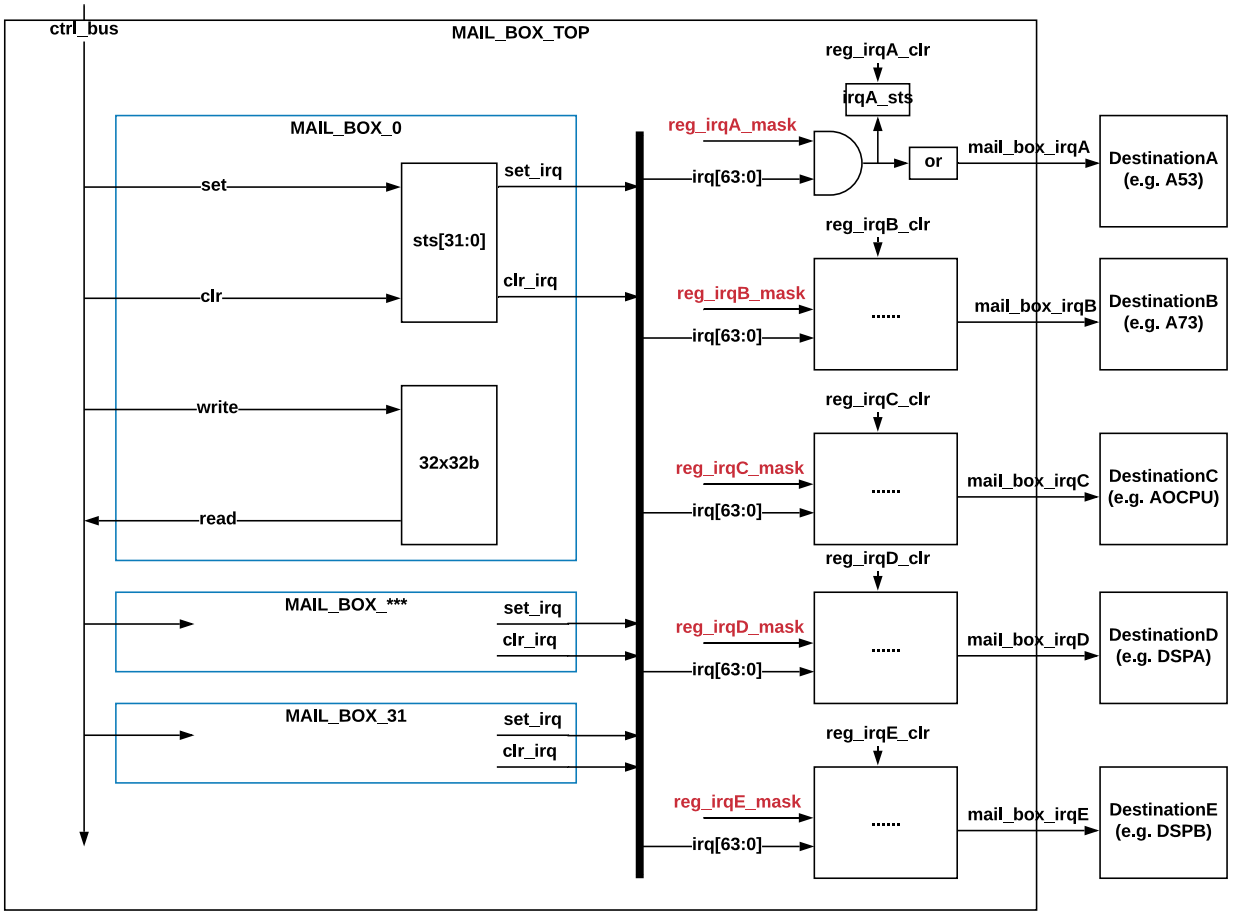

7.14.2 Register Description

Register Address

- MAILBOX_BUF_MBOX00 0xfe006000
- MAILBOX_BUF_MBOX01 0xfe006080
- MAILBOX_BUF_MBOX02 0xfe006100
- MAILBOX_BUF_MBOX03 0xfe006180
- MAILBOX_BUF_MBOX04 0xfe006200
- MAILBOX_BUF_MBOX05 0xfe006280
- MAILBOX_BUF_MBOX06 0xfe006300
- MAILBOX_BUF_MBOX07 0xfe006380
- MAILBOX_BUF_MBOX08 0xfe006400
- MAILBOX_BUF_MBOX09 0xfe006480
- MAILBOX_BUF_MBOX10 0xfe006500
- MAILBOX_BUF_MBOX11 0xfe006580
- MAILBOX_BUF_MBOX12 0xfe006600
- MAILBOX_BUF_MBOX13 0xfe006680
- MAILBOX_BUF_MBOX14 0xfe006700

Amlogic Proprietary and Confidential
Copyright © Amlogic. All rights reserved.

- MAILBOX_BUF_MBOX15 0xfe006780
- MAILBOX_BUF_MBOX16 0xfe006800
- MAILBOX_BUF_MBOX17 0xfe006880
- MAILBOX_BUF_MBOX18 0xfe006900
- MAILBOX_BUF_MBOX19 0xfe006980
- MAILBOX_BUF_MBOX20 0xfe006a00
- MAILBOX_BUF_MBOX21 0xfe006a80
- MAILBOX_BUF_MBOX22 0xfe006b00
- MAILBOX_BUF_MBOX23 0xfe006b80
- MAILBOX_BUF_MBOX24 0xfe006c00
- MAILBOX_BUF_MBOX25 0xfe006c80
- MAILBOX_BUF_MBOX26 0xfe006d00
- MAILBOX_BUF_MBOX27 0xfe006d80
- MAILBOX_BUF_MBOX28 0xfe006e00
- MAILBOX_BUF_MBOX29 0xfe006e80
- MAILBOX_BUF_MBOX30 0xfe006f00
- MAILBOX_BUF_MBOX31 0xfe006f80
- MAILBOX_LOCK_BIT0 0xfe007000
- MAILBOX_LOCK_BIT1 0xfe007004
- MAILBOX_LOCK_BIT2 0xfe007008
- MAILBOX_LOCK_BIT3 0xfe00700c
- MAILBOX_ACCESS_EN_IRQA_CLR 0xfe007020
- MAILBOX_ACCESS_EN_IRQB_CLR 0xfe007024
- MAILBOX_ACCESS_EN_IRQC_CLR 0xfe007028
- MAILBOX_ACCESS_EN_IRQD_CLR 0xfe00702c
- MAILBOX_ACCESS_EN_IRQE_CLR 0xfe007030
- MAILBOX_IRQ_TYPE0 0xfe007034
- MAILBOX_IRQ_TYPE1 0xfe007038
- MAILBOX_IRQA_MASK0 0xfe007040
- MAILBOX_IRQA_MASK1 0xfe007044
- MAILBOX_IRQB_MASK0 0xfe007048
- MAILBOX_IRQB_MASK1 0xfe00704c
- MAILBOX_IRQC_MASK0 0xfe007050
- MAILBOX_IRQC_MASK1 0xfe007054
- MAILBOX_IRQD_MASK0 0xfe007058
- MAILBOX_IRQD_MASK1 0xfe00705c
- MAILBOX_IRQE_MASK0 0xfe007060
- MAILBOX_IRQE_MASK1 0xfe007064
- MAILBOX_IRQA_CLR0 0xfe007080
- MAILBOX_IRQA_CLR1 0xfe007084
- MAILBOX_IRQB_CLR0 0xfe007088
- MAILBOX_IRQB_CLR1 0xfe00708c
- MAILBOX_IRQC_CLR0 0xfe007090
- MAILBOX_IRQC_CLR1 0xfe007094

Amlogic Proprietary and Confidential
Copyright © Amlogic. All rights reserved.

- MAILBOX_IRQD_CLR0 0xfe007098
- MAILBOX_IRQD_CLR1 0xfe00709c
- MAILBOX_IRQE_CLR0 0xfe0070a0
- MAILBOX_IRQE_CLR1 0xfe0070a4
- MAILBOX_IRQA_STS0 0xfe0070c0
- MAILBOX_IRQA_STS1 0xfe0070c4
- MAILBOX_IRQB_STS0 0xfe0070c8
- MAILBOX_IRQB_STS1 0xfe0070cc
- MAILBOX_IRQC_STS0 0xfe0070d0
- MAILBOX_IRQC_STS1 0xfe0070d4
- MAILBOX_IRQD_STS0 0xfe0070d8
- MAILBOX_IRQD_STS1 0xfe0070dc
- MAILBOX_IRQE_STS0 0xfe0070e0
- MAILBOX_IRQE_STS1 0xfe0070e4
- MAILBOX_ACCESS_EN_MBOX00 0xfe007100
- MAILBOX_ACCESS_EN_MBOX01 0xfe007104
- MAILBOX_ACCESS_EN_MBOX02 0xfe007108
- MAILBOX_ACCESS_EN_MBOX03 0xfe00710c
- MAILBOX_ACCESS_EN_MBOX04 0xfe007110
- MAILBOX_ACCESS_EN_MBOX05 0xfe007114
- MAILBOX_ACCESS_EN_MBOX06 0xfe007118
- MAILBOX_ACCESS_EN_MBOX07 0xfe00711c
- MAILBOX_ACCESS_EN_MBOX08 0xfe007120
- MAILBOX_ACCESS_EN_MBOX09 0xfe007124
- MAILBOX_ACCESS_EN_MBOX10 0xfe007128
- MAILBOX_ACCESS_EN_MBOX11 0xfe00712c
- MAILBOX_ACCESS_EN_MBOX12 0xfe007130
- MAILBOX_ACCESS_EN_MBOX13 0xfe007134
- MAILBOX_ACCESS_EN_MBOX14 0xfe007138
- MAILBOX_ACCESS_EN_MBOX15 0xfe00713c
- MAILBOX_ACCESS_EN_MBOX16 0xfe007140
- MAILBOX_ACCESS_EN_MBOX17 0xfe007144
- MAILBOX_ACCESS_EN_MBOX18 0xfe007148
- MAILBOX_ACCESS_EN_MBOX19 0xfe00714c
- MAILBOX_ACCESS_EN_MBOX20 0xfe007150
- MAILBOX_ACCESS_EN_MBOX21 0xfe007154
- MAILBOX_ACCESS_EN_MBOX22 0xfe007158
- MAILBOX_ACCESS_EN_MBOX23 0xfe00715c
- MAILBOX_ACCESS_EN_MBOX24 0xfe007160
- MAILBOX_ACCESS_EN_MBOX25 0xfe007164
- MAILBOX_ACCESS_EN_MBOX26 0xfe007168
- MAILBOX_ACCESS_EN_MBOX27 0xfe00716c
- MAILBOX_ACCESS_EN_MBOX28 0xfe007170
- MAILBOX_ACCESS_EN_MBOX29 0xfe007174

Amlogic Proprietary and Confidential
Copyright © Amlogic. All rights reserved.

- MAILBOX_ACCESS_EN_MBOX30 0xfe007178
- MAILBOX_ACCESS_EN_MBOX31 0xfe00717c
- MAILBOX_SET_MBOX00 0xfe007180
- MAILBOX_SET_MBOX01 0xfe007184
- MAILBOX_SET_MBOX02 0xfe007188
- MAILBOX_SET_MBOX03 0xfe00718c
- MAILBOX_SET_MBOX04 0xfe007190
- MAILBOX_SET_MBOX05 0xfe007194
- MAILBOX_SET_MBOX06 0xfe007198
- MAILBOX_SET_MBOX07 0xfe00719c
- MAILBOX_SET_MBOX08 0xfe0071a0
- MAILBOX_SET_MBOX09 0xfe0071a4
- MAILBOX_SET_MBOX10 0xfe0071a8
- MAILBOX_SET_MBOX11 0xfe0071ac
- MAILBOX_SET_MBOX12 0xfe0071b0
- MAILBOX_SET_MBOX13 0xfe0071b4
- MAILBOX_SET_MBOX14 0xfe0071b8
- MAILBOX_SET_MBOX15 0xfe0071bc
- MAILBOX_SET_MBOX16 0xfe0071c0
- MAILBOX_SET_MBOX17 0xfe0071c4
- MAILBOX_SET_MBOX18 0xfe0071c8
- MAILBOX_SET_MBOX19 0xfe0071cc
- MAILBOX_SET_MBOX20 0xfe0071d0
- MAILBOX_SET_MBOX21 0xfe0071d4
- MAILBOX_SET_MBOX22 0xfe0071d8
- MAILBOX_SET_MBOX23 0xfe0071dc
- MAILBOX_SET_MBOX24 0xfe0071e0
- MAILBOX_SET_MBOX25 0xfe0071e4
- MAILBOX_SET_MBOX26 0xfe0071e8
- MAILBOX_SET_MBOX27 0xfe0071ec
- MAILBOX_SET_MBOX28 0xfe0071f0
- MAILBOX_SET_MBOX29 0xfe0071f4
- MAILBOX_SET_MBOX30 0xfe0071f8
- MAILBOX_SET_MBOX31 0xfe0071fc
- MAILBOX_CLR_MBOX00 0xfe007200
- MAILBOX_CLR_MBOX01 0xfe007204
- MAILBOX_CLR_MBOX02 0xfe007208
- MAILBOX_CLR_MBOX03 0xfe00720c
- MAILBOX_CLR_MBOX04 0xfe007210
- MAILBOX_CLR_MBOX05 0xfe007214
- MAILBOX_CLR_MBOX06 0xfe007218
- MAILBOX_CLR_MBOX07 0xfe00721c
- MAILBOX_CLR_MBOX08 0xfe007220
- MAILBOX_CLR_MBOX09 0xfe007224

Amlogic Proprietary and Confidential
Copyright © Amlogic. All rights reserved.

- MAILBOX_CLR_MBOX10 0xfe007228
- MAILBOX_CLR_MBOX11 0xfe00722c
- MAILBOX_CLR_MBOX12 0xfe007230
- MAILBOX_CLR_MBOX13 0xfe007234
- MAILBOX_CLR_MBOX14 0xfe007238
- MAILBOX_CLR_MBOX15 0xfe00723c
- MAILBOX_CLR_MBOX16 0xfe007240
- MAILBOX_CLR_MBOX17 0xfe007244
- MAILBOX_CLR_MBOX18 0xfe007248
- MAILBOX_CLR_MBOX19 0xfe00724c
- MAILBOX_CLR_MBOX20 0xfe007250
- MAILBOX_CLR_MBOX21 0xfe007254
- MAILBOX_CLR_MBOX22 0xfe007258
- MAILBOX_CLR_MBOX23 0xfe00725c
- MAILBOX_CLR_MBOX24 0xfe007260
- MAILBOX_CLR_MBOX25 0xfe007264
- MAILBOX_CLR_MBOX26 0xfe007268
- MAILBOX_CLR_MBOX27 0xfe00726c
- MAILBOX_CLR_MBOX28 0xfe007270
- MAILBOX_CLR_MBOX29 0xfe007274
- MAILBOX_CLR_MBOX30 0xfe007278
- MAILBOX_CLR_MBOX31 0xfe00727c
- MAILBOX_STS_MBOX00 0xfe007280
- MAILBOX_STS_MBOX01 0xfe007284
- MAILBOX_STS_MBOX02 0xfe007288
- MAILBOX_STS_MBOX03 0xfe00728c
- MAILBOX_STS_MBOX04 0xfe007290
- MAILBOX_STS_MBOX05 0xfe007294
- MAILBOX_STS_MBOX06 0xfe007298
- MAILBOX_STS_MBOX07 0xfe00729c
- MAILBOX_STS_MBOX08 0xfe0072a0
- MAILBOX_STS_MBOX09 0xfe0072a4
- MAILBOX_STS_MBOX10 0xfe0072a8
- MAILBOX_STS_MBOX11 0xfe0072ac
- MAILBOX_STS_MBOX12 0xfe0072b0
- MAILBOX_STS_MBOX13 0xfe0072b4
- MAILBOX_STS_MBOX14 0xfe0072b8
- MAILBOX_STS_MBOX15 0xfe0072bc
- MAILBOX_STS_MBOX16 0xfe0072c0
- MAILBOX_STS_MBOX17 0xfe0072c4
- MAILBOX_STS_MBOX18 0xfe0072c8
- MAILBOX_STS_MBOX19 0xfe0072cc
- MAILBOX_STS_MBOX20 0xfe0072d0
- MAILBOX_STS_MBOX21 0xfe0072d4

Amlogic Proprietary and Confidential
Copyright © Amlogic. All rights reserved.

- MAILBOX_STS_MBOX22 0xfe0072d8
- MAILBOX_STS_MBOX23 0xfe0072dc
- MAILBOX_STS_MBOX24 0xfe0072e0
- MAILBOX_STS_MBOX25 0xfe0072e4
- MAILBOX_STS_MBOX26 0xfe0072e8
- MAILBOX_STS_MBOX27 0xfe0072ec
- MAILBOX_STS_MBOX28 0xfe0072f0
- MAILBOX_STS_MBOX29 0xfe0072f4
- MAILBOX_STS_MBOX30 0xfe0072f8
- MAILBOX_STS_MBOX31 0xfe0072fc

Register Description

MAILBOX_BUF_MBOX**

Buffer base address for mailbox 0~31.

The following diagram shows the example of mbox0:

Figure 7-33 Mailbox Buffer

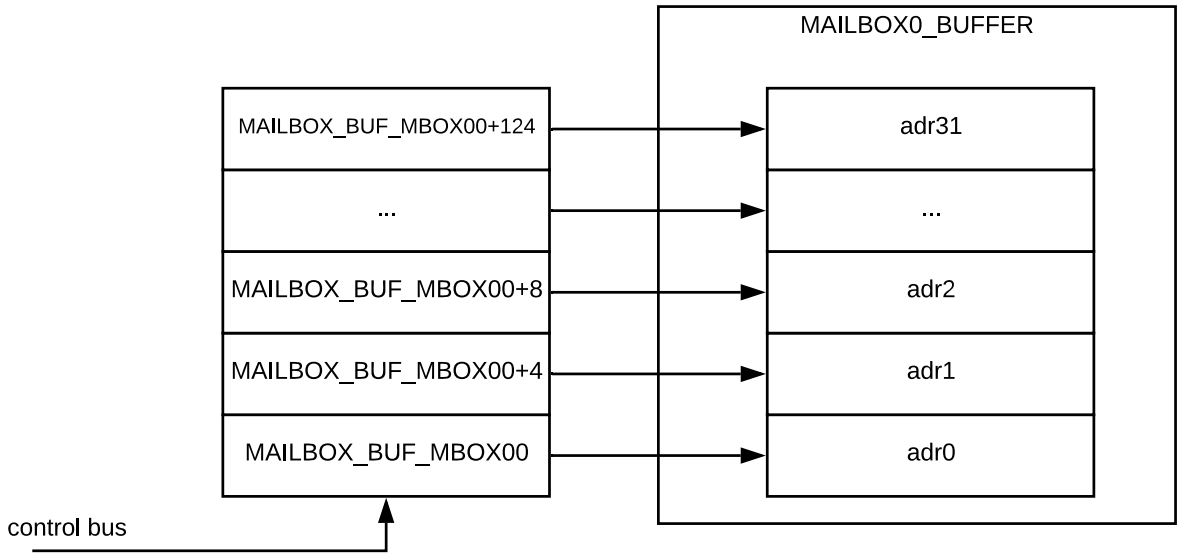

Table 7-829 MAILBOX_SET_MBOX*

Bit(s)	R/W	Default	Description
31:0	W	0	write 32bits data to mailbox sts

Table 7-830 MAILBOX_CLR_MBOX*

Bit(s)	R/W	Default	Description
31:0	W	0	will clear some bits of mailbox sts like new_sts = old_sts & ~write_data

Amlogic Proprietary and Confidential
Copyright © Amlogic. All rights reserved.

Table 7-831 MAILBOX_STS_MBOX*

Bit(s)	R/W	Default	Description
31:0	R	0	the sts of mailbox

Table 7-832 MAILBOX_IRQ_TYPE0

Bit(s)	R/W	Default	Description
31	W/R	0	mbox15 irq_clr type;
30	W/R	0	mbox15 irq_set type;
...	...	...	...
3	W/R	0	mbox01 irq_clr type;
2	W/R	0	mbox01 irq_set type;
1	W/R	0	mbox00 irq_clr type; 0: pulse irq; irq_clr generated by :sts changed & new sts == 0; 1: level irq; irq_clr pull high by: sts changed & new sts == 0; irq_clr pull low by : set 0x0;

0	W/R	0	mbox00 irq_set type;
			0: pulse irq;
			irq_set generated by :sts changed & new sts != 0;
			1: level irq;
			irq_set = (sts!= 0);

Table 7-833 MAILBOX_IRQ_TYPE1

Bit(s)	R/W	Default	Description
31	W/R	0	mbox31 irq_clr type;
30	W/R	0	mbox31 irq_set type;
...	...	...	...
3	W/R	0	mbox17 irq_clr type;
2	W/R	0	mbox17 irq_set type;
1	W/R	0	mbox16 irq_clr type;
0	W/R	0	mbox16 irq_set type;

Example flowchart of MAILBOX_IRQ_TYPE1:

Amlogic Proprietary and Confidential
Copyright © Amlogic. All rights reserved.

Figure 7-34 MAILBOX_IRQ_TYPE1 Flowchart

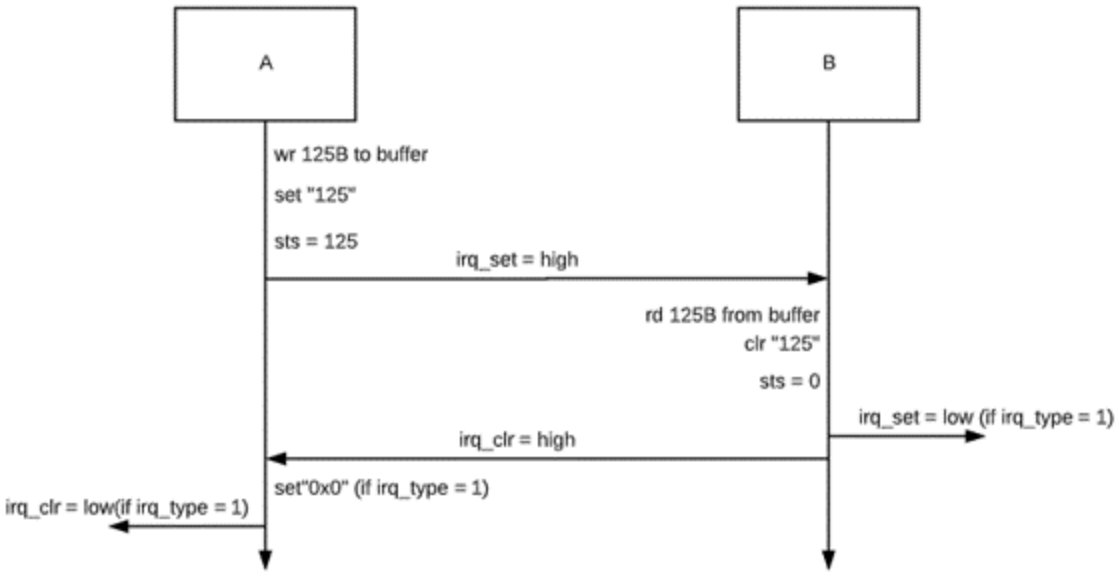

Table 7-834 MAILBOX_IRQ*_MASK0**

Bit(s)	R/W	Default	Description
31	W/R	0	1: enable mbox15 irq_clr connect to IRQ***
30	W/R	0	1: enable mbox15 irq_set connect to IRQ***
...	...	...	...
3	W/R	0	1: enable mbox01 irq_clr connect to IRQ***
2	W/R	0	1: enable mbox01 irq_set connect to IRQ***
1	W/R	0	1: enable mbox00 irq_clr connect to IRQ***
0	W/R	0	1: enable mbox00 irq_set connect to IRQ***

Table 7-835 MAILBOX_IRQ*_MASK1**

Bit(s)	R/W	Default	Description
31	W/R	0	1: enable mbox31 irq_clr connect to IRQ***
30	W/R	0	1: enable mbox31 irq_set connect to IRQ***
...	...	...	...
3	W/R	0	1: enable mbox17 irq_clr connect to IRQ***
2	W/R	0	1: enable mbox17 irq_set connect to IRQ***
1	W/R	0	1: enable mbox16 irq_clr connect to IRQ***
0	W/R	0	1: enable mbox16 irq_set connect to IRQ***

Amlogic Proprietary and Confidential
Copyright © Amlogic. All rights reserved.

Table 7-836 MAILBOX_IRQ*_CLR0**

Bit(s)	R/W	Default	Description
31	W	0	1: clear IRQ*** sts bit31(latched by mbox15 irq_clr)
30	W	0	1: clear IRQ*** sts bit30(latched by mbox15 irq_set)
...	...	...	...
3	W	0	1: clear IRQ*** sts bit3(latched by mbox01 irq_clr)
2	W	0	1: clear IRQ*** sts bit2(latched by mbox01 irq_set)
1	W	0	1: clear IRQ*** sts bit1(latched by mbox00 irq_clr)
0	W	0	1: clear IRQ*** sts bit0(latched by mbox00 irq_set)

Table 7-837 MAILBOX_IRQ*_CLR1**

Bit(s)	R/W	Default	Description
31	W	0	1: clear IRQ*** sts bit63(latched by mbox31 irq_clr)
30	W	0	1: clear IRQ*** sts bit62(latched by mbox31 irq_set)
...	...	...	...
3	W	0	1: clear IRQ*** sts bit35(latched by mbox17 irq_clr)
2	W	0	1: clear IRQ*** sts bit34(latched by mbox17 irq_set)
1	W	0	1: clear IRQ*** sts bit33(latched by mbox16 irq_clr)
0	W	0	1: clear IRQ*** sts bit32(latched by mbox16 irq_set)

Table 7-838 MAILBOX_IRQ*_STS0**

Bit(s)	R/W	Default	Description
31	R	0	latched by mbox15 irq_clr
30	R	0	latched by mbox15 irq_set
...	...	...	...
3	R	0	latched by mbox01 irq_clr
2	R	0	latched by mbox01 irq_set
1	R	0	latched by mbox00 irq_clr
0	R	0	latched by mbox00 irq_set

Table 7-839 MAILBOX_IRQ*_STS1**

Bit(s)	R/W	Default	Description
31	R	0	latched by mbox31 irq_clr
30	R	0	latched by mbox31 irq_set
...	...	...	...
3	R	0	latched by mbox17 irq_clr

Amlogic Proprietary and Confidential
Copyright © Amlogic. All rights reserved.

Bit(s)	R/W	Default	Description
2	R	0	latched by mbox17 irq_set
1	R	0	latched by mbox16 irq_clr
0	R	0	latched by mbox16 irq_set

Table 7-840 MAILBOX_ACCESS_EN_IRQ*_CLR**

Bit(s)	R/W	Default	Description
7:0	W/R	0	access_en of CLR_IRQ_STS bit4 = 1: DSP can access bit3 = 1: AOCPU can access bit2 = 1: JTAG(PROD) can access bit1 = 1: REE can access bit0 = 1: TEE can access

Table 7-841 MAILBOX_ACCESS_EN_MBOX*

Bit(s)	R/W	Default	Description
31:24	W/R	0	access_en of RD command bit4 = 1: DSP can access bit3 = 1: AOCPU can access bit2 = 1: JTAG(PROD) can access bit1 = 1: REE can access bit0 = 1: TEE can access
23:16	W/R	0	access_en of WR command bit4 = 1: DSP can access bit3 = 1: AOCPU can access bit2 = 1: JTAG(PROD) can access bit1 = 1: REE can access bit0 = 1: TEE can access
15:8	W/R	0	access_en of CLR command bit4 = 1: DSP can access bit3 = 1: AOCPU can access bit2 = 1: JTAG(PROD) can access bit1 = 1: REE can access bit0 = 1: TEE can access
7:0	W/R	0	access_en of SET command bit4 = 1: DSP can access bit3 = 1: AOCPU can access bit2 = 1: JTAG(PROD) can access bit1 = 1: REE can access bit0 = 1: TEE can access

Table 7-842 MAILBOX_LOCK_BIT0

Bit(s)	R/W	Default	Description
31	W/R	0	write 1 once; 1: lock reg_access_en_mbox00
…	…	…	…
2	W/R	0	write 1 once; 1: lock reg_access_en_mbox02

Amlogic Proprietary and Confidential
Copyright © Amlogic. All rights reserved.

Bit(s)	R/W	Default	Description
1	W/R	0	write 1 once; 1: lock reg_access_en_mbox01
0	W/R	0	write 1 once; 1: lock reg_access_en_mbox00

Table 7-843 MAILBOX_LOCK_BIT1

Bit(s)	R/W	Default	Description
31	W/R	0	write 1 once; 1: lock mbox15 irq_clr destination (all reg_irq***_mask bit31)
30	W/R	0	write 1 once; 1: lock mbox15 irq_set destination (all reg_irq***_mask bit30)
...	...	...	...
1	W/R	0	write 1 once; 1: lock mbox00 irq_clr destination (all reg_irq***_mask bit1)
0	W/R	0	write 1 once; 1: lock mbox00 irq_set destination (all reg_irq***_mask bit0)

Table 7-844 MAILBOX_LOCK_BIT2

Bit(s)	R/W	Default	Description
31	W/R	0	write 1 once; 1: lock mbox31 irq_clr destination (all reg_irq***_mask bit63)
30	W/R	0	write 1 once; 1: lock mbox31 irq_set destination (all reg_irq***_mask bit62)
…	…	…	…
1	W/R	0	write 1 once; 1: lock mbox16 irq_clr destination (all reg_irq***_mask bit33)
0	W/R	0	write 1 once; 1: lock mbox16 irq_set destination (all reg_irq***_mask bit32)

Table 7-845 MAILBOX_LOCK_BIT3

Bit(s)	R/W	Default	Description
31	W/R	0	write 1 once; 1: lock reg_irq_type
20	W/R	0	write 1 once; 1: lock reg_access_en_irqe_clr
19	W/R	0	write 1 once; 1: lock reg_access_en_irqd_clr
18	W/R	0	write 1 once; 1: lock reg_access_en_irqc_clr
17	W/R	0	write 1 once; 1: lock reg_access_en_irqb_clr

Amlogic Proprietary and Confidential
Copyright © Amlogic. All rights reserved.

Bit(s)	R/W	Default	Description
16	W/R	0	write 1 once; 1: lock reg_access_en_irqa_clr
15:0	W/R	0	Reserved

Amlogic Proprietary and Confidential
Copyright © Amlogic. All rights reserved.

8 GE2D

8.1 Overview

The basic structure of GE2D is shown in figure below.

Figure 8-1 GE2D Structure

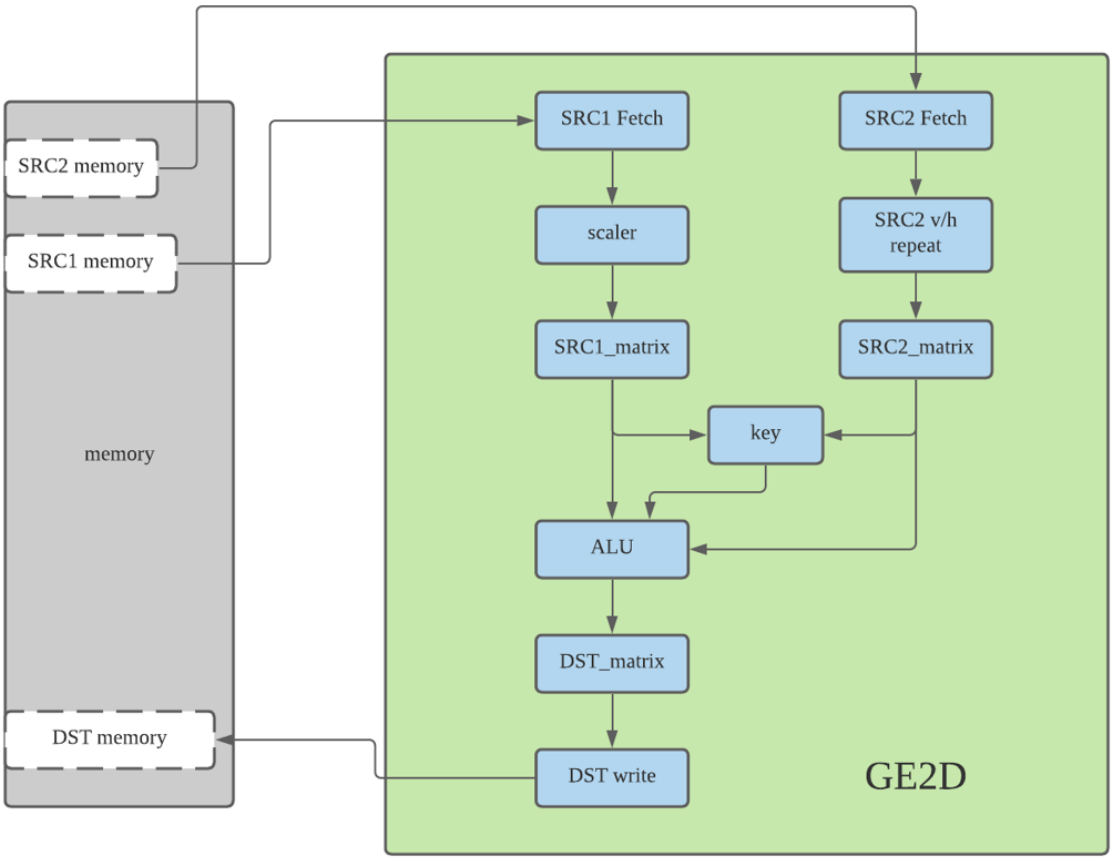

GE2D main features are shown in the following list.

GE2D SRC1

- Supports following input formats
  - 8bit component or 8bit lookup table -> 32bit
  - 16bit: RGB655, RGB844, RGBA6442, RGBA4444, RGB565, ARGB4444, ARGB1555, ARGB4642
  - 24bit: RGB888, RGBA5658, ARGB8565,RGBA6666, ARGB6666,BGR888
  - 32bit: RGBA8888, ARGB8888, ABGR888, BGRA8888
  - YUV, 8bit, 4:2:0, 4:2:2, 4:4:4: One Plane YUV/YUYV, 2 Planes (Y, UV) or 3 planes (Y, U, V)
- Supports X Rev, Y Rev read

GE2D SRC2

- Supports following input formats

Amlogic Proprietary and Confidential
Copyright © Amlogic. All rights reserved.

- 8bit: One component, No lookup table
- 16bit: RGB655, RGB844, RGBA6442, RGBA4444, RGB565, ARGB4444, ARGB1555, ARGB4642
- 24bit: RGB888, RGBA5658, ARGB8565,RGBA6666, ARGB6666,BGR888
- 32bit: RGBA8888, ARGB8888, ABGR888, BGRA8888
- YUV, 8bit: One Plane 4:4:4 only

- Supports X Rev, Y Rev read

GE2D Scaler

- Poly-phase vertical and horizontal scaler
- Anti-flicking filter

GE2D SRC1 Matrix

- 3x3 programmable coefficients For YUV to RGB or RGB to YUV conversion

GE2D SRC2 V/H Repeat

- Repeat the pixel 2, 4, or 8 times in vertical or horizontal

GE2D SRC2 Matrix

- 3x3 programmable coefficients for YUV to RGB or RGB to YUV conversion

GE2D Key

- 32bit SRC1 Key -> SRC1_MASK
- 32bit SRC2 Key -> SRC2_MASK

GE2D ALU

- Independent Color, Alpha operation
- Color(RGB) Operation:
  - Blending mode selection
    - Cs*CFs + Cd*CFd
    - Cs*CFs – Cd *CFd
    - Cd*CFd – Cs*CFs
    - Min(Cs*CFs, Cd*CFd)
    - Max(Cs*CFs,Cd*CFd)
    - Logic OP
  - Independent CFs and CFd Selection: 0, 1, Cs, 1-Cs, 1-Cd, As, 1-As, Ad, 1-Ad, Cc, 1-Cc, Ac, 1-Ac, min(As, 1-Ad)
  - Logic OP if blending mode = Logic OP: 0, S, D, 1, ~S, ~D, S & ~D, S | ~D, S &D, S | D, ~(S&D), ~(S|D), S^D, ~(S^D), ~S & D, ~S|D
- Alpha Operation
  - Alpha blend mode
    - As*AFs + Ad*AFd
    - As*AFs - Ad*AFd
    - Ad*AFd - As*AFs
    - min(As*AFs, Ad*AFd)
    - max(As*AFs, Ad*AFd)
    - As op Ad
  - Independent CFs and CFd Selection: –0, 1, As, 1-As, Ad, 1-Ad, Ac, 1-Ac

Amlogic Proprietary and Confidential
Copyright © Amlogic. All rights reserved.

- Logic OP if blending mode = Logic OP
  - 0, S, D, 1, ~S, ~D, S & ~D, S | ~D, S &D
  - S | D, ~(S&D), ~(S|D), S^D, ~(S^D), ~S & D, ~S|D

- Dst Matrix
  - 3x3 programmable coefficients for YUV to RGB or RGB to YUV conversion
  - support the signed mode output. Range: -128~127

GE2D Dst Write

- output support repeat pixels mode, support 2 times, 4 times, 8times, 16times.
- 8bit component
- 16bit: RGB655, RGB844, RGBA6442, RGBA4444, RGB565, ARGB4444, ARGB1555, ARGB4642
- 24bit: RGB888, RGBA5658, ARGB8565,RGBA6666, ARGB6666,BGR888
- 32bit: RGBA8888, ARGB8888, ABGR888, BGRA8888
- Support YUV, 8bit: One Plane YUV(4:4:4), 2 Planes (Y, UV) NV21

GE2D Secure Mode

- ge2d's secure mode bit send out in SRC1/SRC2/DST AXI ports AxUSER bit.
- ge2d's secure mode configured by TEE/REE. It's latched by each ge2d's processing start command.

8.2 Register Description

For below registers the base address is 0xd0160000.

Each register final address = BASE + address * 4.

Table 8-1 GE2D_GEN_CTRL0 0x8A0

Bit(s)	R/W	Default	Description
31	R/W	0	dst_bytemask_only: Applicable only if dst_bitmask_en=1.
30	R/W	0	dst_bitmask_en: destination bitmask enable. 0: disable; 1: enable.
29	R/W	0	src2_key_en: source2 key enable. 0: disable; 1: enable.
28	R/W	0	src2_key_mode: source2 key mode. 0: mask data when match; 1: mask data when unmatch.
27	R/W	0	src1_key_en: source1 key enable. 0: disable; 1: enable.
26	R/W	0	src1_key_mode: source1 key mode. 0: mask data when match; 1: mask data when unmatch.
25-24	R/W	0	dst1_8b_mode_sel: Destination 1’s 8-bit mode component selection. 0: Select Y or R; 1: Select Cb or G; 2: Select Cr or B; 3: Select Alpha.
23	R/W	0	dst_clip_mode: 0: Write inside clip window;

Amlogic Proprietary and Confidential
Copyright © Amlogic. All rights reserved.

Bit(s)	R/W	Default	Description
			1: Write outside clip window.
22-17	R	0	dst_rpt[5:0], 1~0bit: 0: no rpt,1:x0, 2:0x, 11:xx, 3~2bit: 0, repoeat64, 1: 128, 2:256)
16-15	R/W	0	src2_8b_mode_sel: Applicable only when src2_format=0, define the property of the 8-bit output data. 0: The 8-bit output data is for Y or R; 1: The 8-bit output data is for Cb or G; 2: The 8-bit output data is for Cr or B; 3: The 8-bit output data is for Alpha.
14	R/W	0	src2_fill_mode: When the display window is outside the boundary of the clipping window, this field defines how to fill the area outside the clipping window. 0: Fill with the pixels at the boundary of the clipping window; 1: Fill with the default color defined by register GE2D_SRC2_DEF_COLOR.
13-12	R/W	0	src2_pic_struct: Define how source2 reads the picture stored in DDR memory. 0: Read all lines; 1: Reserved; 2: Read even lines only; 3: Read odd lines only.
11	R/W	0	src2_X_yc_ratio: Source2 x direction yc ratio. 0: 1:1; 1: 2:1.
9-7	R	0	Unused
6-5	R/W	0	src1_8b_mode_sel: Applicable only when src1_sep_en =0, src1_format=0 and src1_lut_en=0, define the property of the 8-bit output data. 0: the 8-bit output data is for Y or R; 1: the 8-bit output data is for Cb or G; 2: the 8-bit output data is for Cr or B; 3: the 8-bit output data is for Alpha.
4	R/W	0	src1_fill_mode: When the display window is outside the boundary of the clipping window, this field defines how to fill the area outside the clipping window. 0: Fill with the pixels at the boundary of the clipping window; 1: Fill with the default color defined by register GE2D_SRC1_DEF_COLOR.
3	R/W	0	src1_lut_en: Applicable only when src1_sep_en =0 and src1_format= 0, define whether to enable 8-bit input data to look up a 32-bit pixel for output. 0: Disable; 1: Enable.
2-1	R/W	0	src1_pic_struct: Define how source1 reads the picture stored in DDR memory. 0: Read all lines; 1: Reserved; 2: Read even lines only; 3: Read odd lines only.

Table 8-2 GE2D_GEN_CTRL1 0x8A1

Bit(s)	R/W	Default	Description
31	R/W	0	soft_rst: If true, reset GE2D.
30	R/W	0	dst write response counter reset
29	R/W	0	disable adding dst write response count to busy bit
28-27	R	0	Unused
26	R/W	0	Color_conversion_mode[1] in alu. Mode[1:0]

Amlogic Proprietary and Confidential
Copyright © Amlogic. All rights reserved.

Bit(s)	R/W	Default	Description
			3 : color_out = color; 2 : color_out = (color != 255) ? color : color + 1; 1 : color_out = (color < 128) ? color : color + 1; 0 : color_out = (color == 0) ? color : color + 1.
25-24	R/W	0	interrupt_ctrl: If bit[0] true, generate interrupt when one command done; if bit[1] true, generate interrupt when ge2d change from busy to not busy.
23-22	R/W	0x3	src2_burst_size_ctrl: Source2 DDR request burst size control. (Note: data to source2 are stored together in one DDR memory block.) 0: Burst size = 24 x 64-bit; 1: Burst size = 32 x 64-bit; 2: Burst size = 48 x 64-bit; 3: Burst size = 64 x 64-bit.
21-16	R/W	0x3F	src1_burst_size_ctrl: Source1 DDR request burst size control. Bit[21:20] control Y burst size, bit[19:18] control Cb burst size, bit[17:16] control Cr burst size. Each 2-bit is decoded as below: 0: Burst size = 24 x 64-bit; 1: Burst size = 32 x 64-bit; 2: Burst size = 48 x 64-bit; 3: Burst size = 64 x 64-bit.
15-14	R/W	0	dst1_pic_struct: Define how destination 1 write the picture to DDR memory. 0: Write all lines (whole frame); 1: Reserved; 2: Write even lines only (top); 3: Write odd lines only (bottom).
13-12	R/W	0	src_rd_ctrl: Bit[13] if true, force read src1, bit[12] if true, force read src2.
11	R/W	0	dst2_urgent_en: Destination 2 DDR request urgent enable.
10	R/W	0	src1_urgent_en: Source1 DDR request urgent enable.
9	R/W	0	src2_urgent_en: Source2 DDR request urgent enable.
8	R/W	0	dst1_urgent_en: Destination 1 DDR request urgent enable.
7-0	R/W	0	src1_gb_alpha: Source1 global alpha.

Table 8-3 GE2D_GEN_CTRL2 0x8A2

Bit(s)	R/W	Default	Description
31	R/W	0	alpha_conversion_mode[0] in alu. Mode[1:0]: 2,3 : alpha_out = (alpha!=255) ? alpha : alpha + 1; 1 : alpha_out = (alpha < 128) ? alpha : alpha + 1; 0 : alpha_out = (alpha == 0) ? alpha : alpha + 1.
30	R/W	0	Color_conversion_mode[0] in alu. Mode[1:0] 3 : color_out = color; 2 : color_out = (color != 255) ? color : color + 1; 1 : color_out = (color < 128) ? color : color + 1; 0 : color_out = (color == 0) ? color : color + 1.
29	R/W	0	src1_gb_alpha_en in alu. As = src1_gb_alpha_en ? Asr * Ag: Asr
28	R/W	0	dst1_COLOR_round_MODE. 1 = Truncate the full bit color components to required output bit width; 0 = Round (+ 0.5) the full bit color components to required output bit width.
27	R/W	0	src2_COLOR_EXPAND_MODE.

Amlogic Proprietary and Confidential
Copyright © Amlogic. All rights reserved.

Bit(s)	R/W	Default	Description
			1 = Expand the color components to 8-bit by padding LSBs with MSBs. E.g. If the input is 5'b11000, the output is expanded to 8'b11000110; 0 = Expand the color components to 8-bit by padding LSBs with 0.
26	R/W	0	src2_ALPHA_EXPAND_MODE. 1 = Expand alpha value to 8-bit by padding LSBs with MSBs. E.g. If the input is 5'b11000, the output is expanded to 8'b11000110; 0 = If input alpha value is all 1, then expand the value to 8-bit by padding LSBs with 1; otherwise, pad LSBs with 0.
25	R/W	0	src1_COLOR_EXPAND_MODE. 1 = Expand the color components to 8-bit by padding LSBs with MSBs. E.g. If the input is 5'b11000, the output is expanded to 8'b11000110; 0 = Expand the color components to 8-bit by padding LSBs with 0.
24	R/W	0	src1_ALPHA_EXPAND_MODE. 1 = Expand alpha value to 8-bit by padding LSBs with MSBs. E.g. If the input is 5'b11000, the output is expanded to 8'b11000110; 0 = If input alpha value is all 1, then expand the value to 8-bit by padding LSBs with 1; otherwise, pad LSBs with 0.
23	R/W	0	dst_little_endian: define the endianess of SRC2 input data. 1 = Little endian; 0 = Big endian.
22-19	R/W	0	dst1_color_map: Applicable to 16-bit, 24-bit and 32-bit pixel, defines the bit-field allocation of the pixel data. For whether to truncate or round full 8-bit to output, refer to ge2d_gen_ctrl2.dst1_color_round_mode. For 16-bit mode (dst1_format=1): 0 = Unused; 1 = 6:5:5 format. Bit[15:10] is Y [7:2] or R[7:2], bit[9:5] is Cb[7:3] or G[7:3], bit[4:0] is Cr[7:3] or B[7:3]; 2 = 8:4:4 format. Bit[15:8] is Y or R, bit[7:4] is Cb[7:4] or G[7:4], bit[3:0] is Cr[7:4] or B[7:4]]; 3 = 6:4:4:2 format. Bit[15:10] is Y[7:2] or R[7:2], bit[9:6] is Cb[7:4] or G[7:4], bit [5:2] is Cr[7:4] or B[7:4], bit[1:0] is Alpha[7:6]; 4 = 4:4:4:4 format. Bit[15:12] is Y [7:4] or R[7:4], bit[11:8] is Cb[7:4] or G[7:4], bit[7:4] is Cr[7:4] or B[7:4], bit[3:0] is Alpha[7:4]; 5 = 5:6:5 format. Bit[15:11] is Y[7:3] or R[7:3], bit[10:5] is Cb[7:2] or G [7:2], bit[4:0] is Cr[7:3] or B[7:3]; 6 = 4:4:4:4 format. Bit[15:12] is Alpha[7:4], bit [11:8] is Y[7:4] or R[7:4], bit[7:4] is Cb[7:4] or G[7:4], bit[3:0] is Cr[7:4] or B[7:4]; 7 = 1:5:5:5 format. Bit[15] is Alpha[7], bit[14:10] is Y[7:3] or R[7:3], bit[9:5] is Cb [7:3] or G[7:3], bit[4:0] is Cr[7:3] or B[7:3]; 8 = 4:6:4:2 format. Bit[15:12] is Y[7:4] or R[7:4], bit[11:6] is Cb[7:2] or G[7:2], bit[5:2] is Cr[7:4] or B[7:4], bit[1:0] is Alpha [1:0]. 9 = CbCr format. Bit[15:8] is Cb, bit[7:0] is Cr; 10 = CrCb format. Bit[15:8] is Cr, bit[7:0] is Cb. For 24-bit mode (dst1_format=2): 0 = RGB 8:8:8 mode. Bit [23:16] is Y or R, bit[15:8] is Cb or G, bit[7:0] is Cr or B; 1 = RGBA 5:6:5:8 mode. Bit[23:19] is Y[7:3] or R[7:3], bit[18:13] is Cb[7:2] or G[7:2], bit[12:8] is Cr[7:3] or B[7:3], bit[7:0] is Alpha; 2 = ARGB 8:5:6:5 mode. Bit[23:16] is Alpha, bit[15:11] is Y[7:3] or R[7:3], bit[10:5] is Cb[7:2] or G[7:2], bit[4:0] is Cr[7:3] or B[7:3]; 3 = RGBA 6:6:6:6 mode. Bit[23:18] is Y[7:2] or R[7:2], bit[17:12] is Cb[7:2] or G[7:2], bit[11:6] is Cr[7:2] or B[7:2], bit[5:0] is Alpha[7:2]; 4 = ARGB 6:6:6:6 mode. Bit [23:18] is Alpha[7:2];, bit[17:12] is Y[7:2] or R[7:2], bit[11:6] is Cb[7:2] or G[7:2], bit[5:0] is Cr[7:2] or B[7:2]; 5 = BGR 8:8:8 mode. Bit[23:16] is Cr or B, bit[15:8] is Cb or G, bit[7:0] is Y or R. For 32-bit mode (dst1_format=3): 0 = RGBA 8:8:8:8 format. Bit[31:24] is Y or R, bit[23:16] is Cb or G; bit[15:8] is Cr or B; bit[7:0] is Alpha; 1 = ARGB 8:8:8:8 format. Bit[31:24] is Alpha, bit[23:16] is Y or R; bit[15:8] is Cb or G; bit[7:0] is Cr or B; 2 = ABGR 8:8:8:8 format. Bit[31:24] is Alpha, bit [23:16] is Cr or B; bit[15:8] is Cb or G; bit[7:0] is Y or R; 3 = BGRA 8:8:8:8 format. Bit[31:24] is Cr or B, bit[23:16] is Cb or G; bit[15:8] is Y or R; bit[7:0] is Alpha.
18	R/W	0	ALU_MULT_MODE: 1: mult result rounding else truncation
17-16	R/W	0	dst1_format: define output pixel byte-width. 0: Output pixel is 1-byte (8-bit) color component; 1: Output pixel is 2-byte (16-bit), refer to GE2D_GEN_CTRL2.dst1_COLOR_ map for further pixel color mapping; 2: Output pixel is 3-byte (24-bit), refer to GE2D_GEN_CTRL2.dst1_COLOR_ MAP for further pixel color mapping; 3: Output pixel is 4-byte (32-bit), refer to GE2D_GEN_CTRL2.dst1_COLOR_ MAP for further pixel color mapping.

Amlogic Proprietary and Confidential
Copyright © Amlogic. All rights reserved.

Bit(s)	R/W	Default	Description
15	R/W	0	src2_little_endian: define the endianess of SRC2 input data. 1 = Little endian; 0 = Big endian.
14-11	R/W	0	src2_color_map: Applicable to 16-bit, 24-bit and 32-bit pixel, defines the bit-field allocation of the pixel data. For expanding the bit-fields to full 8-bit, refer to ge2d_gen_ctrl2.src2_color_expand_mode and ge2d_gen_ctrl2.src2_alpha_expand_mode. For 16-bit mode (src2_format=1): 0 = Unused; 1 = 6:5:5 format. Bit[15:10] is Y[7:2] or R[7:2], bit[9:5] is Cb[7:3] or G[7:3], bit[4:0] is Cr[7:3] or B[7:3]; 2 = 8:4:4 format. Bit[15:8] is Y or R, bit[7:4] is Cb[7:4] or G[7:4], bit[3:0] is Cr[7:4] or B[7:4]; 3 = 6:4:4:2 format. Bit[15:10] is Y[7:2] or R[7:2], bit[9:6] is Cb[7:4] or G[7:4], bit[5:2] is Cr[7:4] or B[7:4], bit[1:0] is Alpha[7:6]; 4 = 4:4:4:4 format. Bit[15:12] is Y[7:4] or R[7:4], bit[11:8] is Cb[7:4] or G[7:4], bit[7:4] is Cr[7:4] or B[7:4], bit[3:0] is Alpha[7:4]; 5 = 5:6:5 format. Bit[15:11] is Y[7:3] or R[7:3], bit[10:5] is Cb[7:2] or G[7:2], bit[4:0] is Cr[7:3] or B[7:3]; 6 = 4:4:4:4 format. Bit[15:12] is Alpha[7:4], bit[11:8] is Y[7:4] or R[7:4], bit[7:4] is Cb[7:4] or G[7:4], bit[3:0] is Cr[7:4] or B[7:4]; 7 = 1:5:5:5 format. Bit[15] is Alpha[7], bit[14:10] is Y[7:3] or R[7:3], bit[9:5] is Cb[7:3] or G[7:3], bit[4:0] is Cr[7:3] or B[7:3]; 8 = 4:6:4:2 format. Bit[15:12] is Y[7:4] or R[7:4], bit[11:6] is Cb[7:2] or G[7:2], bit[5:2] is Cr[7:4] or B[7:4], bit[1:0] is Alpha[1:0]. For 24-bit mode (src2_format=2): 0 = RGB 8:8:8 mode. Bit[23:16] is Y or R, bit[15:8] is Cb or G, bit[7:0] is Cr or B; 1 = RGBA 5:6:5:8 mode. Bit[23:19] is Y[7:3] or R[7:3], bit[18:13] is Cb[7:2] or G[7:2], bit[12:8] is Cr[7:3] or B[7:3], bit[7:0] is Alpha; 2 = ARGB 8:5:6:5 mode. Bit[23:16] is Alpha, bit[15:11] is Y[7:3] or R[7:3], bit[10:5] is Cb[7:2] or G[7:2], bit[4:0] is Cr[7:3] or B[7:3]; 3 = RGBA 6:6:6:6 mode. Bit[23:18] is Y[7:2] or R[7:2], bit[17:12] is Cb[7:2] or G[7:2], bit[11:6] is Cr[7:2] or B[7:2], bit[5:0] is Alpha[7:2]; 4 = ARGB 6:6:6:6 mode. Bit[23:18] is Alpha[7:2];, bit[17:12] is Y[7:2] or R[7:2], bit[11:6] is Cb[7:2] or G[7:2], bit[5:0] is Cr[7:2] or B[7:2]; 5 = BGR 8:8:8 mode. Bit[23:16] is Cr or B, bit[15:8] is Cb or G, bit[7:0] is Y or R. For 32-bit mode (src2_format=3): 0 = RGBA 8:8:8:8 format. Bit[31:24] is Y or R, bit[23:16] is Cb or G; bit[15:8] is Cr or B; bit[7:0] is Alpha; 1 = ARGB 8:8:8:8 format. Bit[31:24] is Alpha, bit[23:16] is Y or R; bit[15:8] is Cb or G; bit[7:0] is Cr or B; 2 = ABGR 8:8:8:8 format. Bit[31:24] is Alpha, bit[23:16] is Cr or B; bit[15:8] is Cb or G; bit[7:0] is Y or R; 3 = BGRA 8:8:8:8 format. Bit[31:24] is Cr or B, bit[23:16] is Cb or G; bit[15:8] is Y or R; bit[7:0] is Alpha.
10	R/W	0	alpha_conversion_mode[1] in alu. Mode[1:0]: 2,3 : alpha_out = (alpha!=255) ? alpha : alpha + 1; 1 : alpha_out = (alpha < 128) ? alpha : alpha + 1; 0 : alpha_out = (alpha == 0) ? alpha : alpha + 1.
9-8	R/W	0	src2_format: define input pixel byte-width. 0: Input pixel is 1-byte (8-bit) color component; 1: Input pixel is 2-byte (16-bit), refer to GE2D_GEN_CTRL2.SRC2_COLOR_MAP for further pixel color mapping; 2: Input pixel is 3-byte (24-bit), refer to GE2D_GEN_CTRL2.SRC2_COLOR_MAP for further pixel color mapping; 3: Input pixel is 4-byte (32-bit), refer to GE2D_GEN_CTRL2.SRC2_COLOR_MAP for further pixel color mapping.
7	R/W	0	src1_little_endian: define the endianess of SRC1 input data. 1 = Little endian; 0 = Big endian.
6-3	R/W	0	src1_color_map: Note: If SRC1_DEEPCOLOR=0, the SRC1_COLOR_MAP's definitions is as below. If SRC1_DEEPCOLOR=1, please refer to SRC1_DEEPCOLOR entry for new meaning. Applicable to 16-bit, 24-bit and 32-bit pixel, defines the bit-field allocation of the pixel data. For expanding the bit-fields to full 8-bit, refer to ge2d_gen_ctrl2.src1_color_expand_mode and ge2d_gen_ctrl2.src1_alpha_expand_mode. For 16-bit mode (src1_format=1): 0 = 4:2:2 format (Y0Cb0Y1Cr0); 1 = 6:5:5 format. Bit[15:10] is Y[7:2] or R[7:2], bit[9:5] is Cb[7:3] or G[7:3], bit[4:0] is Cr[7:3] or B[7:3]; 2 = 8:4:4 format. Bit[15:8] is Y or R, bit[7:4] is Cb[7:4] or G[7:4], bit[3:0] is Cr[7:4] or B[7:4]; 3 = 6:4:4:2 format. Bit[15:10] is Y[7:2] or R[7:2], bit[9:6] is Cb[7:4] or G[7:4], bit[5:2] is Cr[7:4] or B[7:4], bit[1:0] is Alpha[7:6]; 4 = 4:4:4:4 format. Bit

Amlogic Proprietary and Confidential
Copyright © Amlogic. All rights reserved.

Bit(s)	R/W	Default	Description
			[15:12] is Y[7:4] or R[7:4], bit[11:8] is Cb[7:4] or G[7:4], bit[7:4] is Cr[7:4] or B [7:4], bit[3:0] is Alpha[7:4]; 5 = 5:6:5 format. Bit[15:11] is Y[7:3] or R[7:3], bit[10:5] is Cb[7:2] or G[7:2], bit[4:0] is Cr[7:3] or B[7:3]; 6 = 4:4:4:4 format. Bit[15:12] is Alpha[7:4], bit[11:8] is Y[7:4] or R[7:4], bit[7:4] is Cb[7:4] or G[7:4], bit[3:0] is Cr[7:4] or B[7:4]; 7 = 1:5:5:5 format. Bit[15] is Alpha[7], bit[14:10] is Y[7:3] or R[7:3], bit [9:5] is Cb[7:3] or G[7:3], bit[4:0] is Cr[7:3] or B[7:3]; 8 = 4:6:4:2 format. Bit[15:12] is Y[7:4] or R[7:4], bit[11:6] is Cb[7:2] or G[7:2], bit[5:2] is Cr[7:4] or B[7:4], bit[1:0] is Alpha[1:0]. For 24-bit mode (src1_format=2): 0 = RGB 8:8:8 mode. Bit[23:16] is Y or R, bit[15:8] is Cb or G, bit[7:0] is Cr or B; 1 = RGBA 5:6:5:8 mode. Bit [23:19] is Y[7:3] or R[7:3], bit[18:13] is Cb[7:2] or G[7:2], bit[12:8] is Cr[7:3] or B [7:3], bit[7:0] is Alpha; 2 = ARGB 8:5:6:5 mode. Bit[23:16] is Alpha, bit[15:11] is Y [7:3] or R[7:3], bit[10:5] is Cb[7:2] or G[7:2], bit[4:0] is Cr[7:3] or B[7:3]; 3 = RGBA 6:6:6:6 mode. Bit[23:18] is Y[7:2] or R[7:2], bit[17:12] is Cb[7:2] or G[7:2], bit [11:6] is Cr[7:2] or B[7:2], bit[5:0] is Alpha[7:2]; 4 = ARGB 6:6:6:6 mode. Bit [23:18] is Alpha[7:2];, bit[17:12] is Y[7:2] or R[7:2], bit[11:6] is Cb[7:2] or G[7:2], bit[5:0] is Cr[7:2] or B[7:2]; 5 = BGR 8:8:8 mode. Bit[23:16] is Cr or B, bit[15:8] is Cb or G, bit[7:0] is Y or R. 14=NV12 format. 8-bit Y and 16-bit CbCr; 15=NV21 format. 8-bit Y and 16-bit CrCb; For 32-bit mode (src1_format=3): 0 = RGBA 8:8:8:8 format. Bit[31:24] is Y or R, bit[23:16] is Cb or G; bit[15:8] is Cr or B; bit [7:0] is Alpha; 1 = ARGB 8:8:8:8 format. Bit[31:24] is Alpha, bit[23:16] is Y or R; bit[15:8] is Cb or G; bit[7:0] is Cr or B; 2 = ABGR 8:8:8:8 format. Bit[31:24] is Alpha, bit[23:16] is Cr or B; bit[15:8] is Cb or G; bit[7:0] is Y or R; 3 = BGRA 8:8:8:8 format. Bit[31:24] is Cr or B, bit[23:16] is Cb or G; bit[15:8] is Y or R; bit[7:0] is Alpha.
2	R/W	0	src1_DEEPCOLOR: 1 = Enable deepcolor formats support, the formats are defined by SRC1_FORMAT and SRC1_COLOR_MAP; 0 = Disable deepcolor. The supported deepcolor formats are as below: src1_deep_color=1, src1_format=2'b01, src1_color_map=4'b0000 or 4'b0001: 10-bit 422 in one canvas – 10-bit Y + 10-bit C = 20-bit per pixel in canvas. If src1_color_map=4'b0000, the sequence is Y0Cb0, Y1Cr0, ... If src1_color_map=4'b0001, the sequence is Y0Cr0, Y1Cb0, ... src1_deep_color=1, src1_format=2'b01, src1_color_map=4'b1000 or 4'b1001: 12-bit 422 in one canvas – 12-bit Y + 12-bit C = 24-bit per pixel in canvas. If src1_color_map=4'b1000, the sequence is Y0Cb0, Y1Cr0, ... If src1_color_map=4'b1001, the sequence is Y0Cr0, Y1Cb0, ... src1_deep_color=1, src1_format=2'b10: 10-bit 444 in one canvas – 10-bit Y + 10-bit Cb + 10-bit Cr + 2-bit stuffing = 32-bit per pixel in canvas. If src1_color_map=4'b0000, the sequence is Y0Cb0Cr0, Y1Cb1Cr1, ... If src1_color_map=other value, the sequence is Cr0Cb0Y0, Cr1Cb1Y1, ...
1-0	R/W	0	src1_format: define input pixel byte-width. Note: If SRC1_DEEPCOLOR=0, the SRC1_FORMAT's definitions is as below. If SRC1_DEEPCOLOR=1, please refer to SRC1_DEEPCOLOR entry for new meaning. 0: Input pixel is 1-byte (8-bit), it is either an 8-bit color component or 8-bit address to look up a 32-bit pixel, refer to GE2D_GEN_CTRL0. src1_lut_en; 1: Input pixel is 2-byte (16-bit), refer to GE2D_GEN_CTRL2.SRC1_COLOR_MAP for further pixel color mapping; 2: Input pixel is 3-byte (24-bit), refer to GE2D_GEN_CTRL2. SRC1_COLOR_MAP for further pixel color mapping; 3: Input pixel is 4-byte (32-bit), refer to GE2D_GEN_CTRL2.SRC1_COLOR_MAP for further pixel color mapping.

Table 8-4 GE2D_CMD_CTRL 0x8A3

Bit(s)	R/W	Default	Description
31-29	R	0	Unused
28	R/W	0	sec_mode: if true, ge2d works with secure domain
15-14	R/W	0	src2_x_interp_ctrl: if true, do interpolation mode
13-12	R/W	0	SRC2 X repeat: 0 will not repeat, 1 for 1:2, 2 for 1:4, 3 for 1:8

Amlogic Proprietary and Confidential
Copyright © Amlogic. All rights reserved.

Bit(s)	R/W	Default	Description
11-10	R/W	0	SRC2 y repeat: 0 will not repeat, 1 for 1:2, 2 for 1:4, 3 for 1:8
9	R/W	0	src2_fill_color_en: if true, all src2 data use default color.
8	R/W	0	src1_fill_color_en: if true, all src1 data use default color.
7	R/W	0	dst_xy_swap: if true, dst x/y swap.
6	R/W	0	dst_x_rev: if true, dst x direction reversely read.
5	R/W	0	dst_y_rev: if true, dst y direction reversely read.
4	R/W	0	src2_x_rev: if true, src2 x direction reversely read.
3	R/W	0	src2_y_rev: if true, src2 y direction reversely read.
2	R/W	0	src1_x_rev: if true, src1 x direction reversely read.
1	R/W	0	src1_y_rev: if true, src1 y direction reversely read.
0	R/W	0	cbus_cmd_wr: If true, generate a pulse to validate a GE2D command, the command is described by the rest of the field of this register.

Table 8-5 GE2D_STATUS0 0x8A4

Bit(s)	R/W	Default	Description
31-29	R	0	unused
28-17	R	0	dst write response counter, for debug only.
16-7	R	0	dp_status: ge2d_dp status, for debug only.
6	R	0	r1cmd_rdy: read src2 cmd ready.
5	R	0	r2cmd_rdy: read src2 cmd ready.
4	R	0	pdpcmd_v: pre dpcmd ready.
3	R	0	dpcmd_rdy: GE2D dpcmd ready.
2	R	0	buf_cmd_v: GE2D buffer command valid.
1	R	0	curr_cmd_v: GE2D current command valid.
0	R	0	ge2d_busy: GE2D busy.

Table 8-6 GE2D_STATUS1 0x8A5

Bit(s)	R/W	Default	Description
31-30	R	0	unused
29-16	R	0	ge2d_dst1_status, for debug only.
15	R	1	ge2d_rd_src2 core.fifo_empty.
14	R	0	ge2d_rd_src2 core.fifo_overflow.
13-12	R	0	ge2d_rd_src2 core.req_st. Same as req_st_y.
11	R	0	ge2d_rd_src2 cmd_if.cmd_err, true if cmd_format=1.
10	R	0	ge2d_rd_src2 cmd_if.cmd_st, 0=IDLE state, 1=BUSY state.

Amlogic Proprietary and Confidential
Copyright © Amlogic. All rights reserved.

Bit(s)	R/W	Default	Description
9	R	1	ge2d_rd_src1 luma_core(chroma_core).fifo_empty.
8	R	0	ge2d_rd_src1 luma_core(chroma_core).fifo_overflow.
7-6	R	0	ge2d_rd_src1 chroma_core.req_st_cr. Same as req_st_y.
5-4	R	0	ge2d_rd_src1 chroma_core.req_st_cb. Same as req_st_y.
3-2	R	0	ge2d_rd_src1 luma_core.req_st_y. 0: IDLE; 1: WAIT_FIFO_ROOM; 2: REQUEST; 3: WAIT_FINISH.
1	R	0	ge2d_rd_src1 cmd_if.stat_read_window_err, 1=reading/clipping window setting exceed limit.
0	R	0	ge2d_rd_src1 cmd_if.cmd_st, 0=IDLE state, 1=BUSY state.

Table 8-7 GE2D_SRC1_DEF_COLOR 0x8A6

Bit(s)	R/W	Default	Description
31-24	R/W	0	Default Y or R.
23-16	R/W	0x80	Default Cb or G.
15-8	R/W	0x80	Default Cr or B.
7-0	R/W	0	Default Alpha.

Table 8-8 GE2D_SRC1_CLIPX_START_END 0x8A7

Bit(s)	R/W	Default	Description
31	R/W	0	SRC1 clip x start extra, if true, one more data is read for chroma.
30-29	R	0	Unused.
28-16	R/W	0	SRC1 clip x start.
15	R/W	0	SRC1 clip x end extra, if true, one more data is read for chroma.
14-13	R	0	Unused.
12-0	R/W	0x1FFF	SRC1 clip x end.

Table 8-9 GE2D_SRC1_CLIPY_START_END 0x8A8

Bit(s)	R/W	Default	Description
30-29	R	0	Unused.
28-16	R/W	0	SRC1 clip y start.
14-13	R	0	Unused.
12-0	R/W	0x1FFF	SRC1 clip y end.

Amlogic Proprietary and Confidential
Copyright © Amlogic. All rights reserved.

Table 8-10 GE2D_SRC1_CANVAS 0x8A9

Bit(s)	R/W	Default	Description
-24	R/W	0	SRC1 canvas address0, for Y only or Y/Cb/Cr stored together.
7-3	R	0	Unused.
2-0	R/W	0	Blk32 mode

Table 8-11 GE2D_SRC1_X_START_END 0x8AA

Bit(s)	R/W	Default	Description
31	R/W	0	SRC1 x start extra bit1, if true, one more chroma data is read for x even start chroma data when y/c ratio = 2 or x even/odd start chroma extra data when y/c ratio = 1
30	R/W	0	SRC1 x start extra bit0, if true, one more chroma data is read for x odd start chroma data when y/c ratio = 2
29-16	R/W	0	SRC1 x start, signed data
15	R/W	0	SRC1 x end extra bit1, if true, one more chroma data is read for x odd end chroma data when y/c ratio = 2 or x even/odd end chroma extra data when y/c ratio = 1
14	R/W	0	SRC1 x end extra bit0, if true, one more chroma data is read for x even end chroma data when y/c ratio = 2
13-0	R/W	0	SRC1 x end, signed data.

Table 8-12 GE2D_SRC1_Y_START_END 0x8AB

Bit(s)	R/W	Default	Description
31	R/W	0	SRC1 y start extra bit1, if true, one more chroma line is read for y even start chroma data when y/c ratio = 2 or x even/odd start chroma extra data when y/c ratio = 1
30	R/W	0	SRC1 y start extra bit0, if true, one more chroma line is read for y odd start chroma data when y/c ratio = 2
29-16	R/W	0	SRC1 y start, signed data
15	R/W	0	SRC1 y end extra bit1, if true, one more chroma line is read for y odd end chroma data when y/c ratio = 2 or y even/odd end chroma extra data when y/c ratio = 1
14	R/W	0	SRC1 y end extra bit0, if true, one more chroma line is read for y even end chroma data when y/c ratio = 2
13-0	R/W	0	SRC1 y end, signed data.

Table 8-13 GE2D_SRC1_LUT_ADDR 0x8AC

Bit(s)	R/W	Default	Description
31-9	R	0	Unused.
8	R/W	1	0 = Write LUT, 1 = Read LUT.
7-0	R/W	0	lut_addr: The initial read or write address of the look-up table

Amlogic Proprietary and Confidential
Copyright © Amlogic. All rights reserved.

Table 8-14 GE2D_SRC1_LUT_DAT 0x8AD

Bit(s)	R/W	Default	Description
31-24	R/W	0	Current LUT entry's Y or R
23-16	R/W	0	Current LUT entry's Cb or G
15-8	R/W	0	Current LUT entry's Cr or B
7-0	R/W	0	Current LUT entry's Alpha.

Table 8-15 GE2D_SRC1_FMT_CTRL 0x8AE

Bit(s)	R/W	Default	Description
31-20	R	0	Unused.
19	R/W	0	src1_chfmt_rpt_pix: if true, horizontal formatter using repeat to get the pixel, otherwise using interpolation.
18	R/W	0	src1_chfmt_en: horizontal formatter enable.
17	R/W	0	src1_cvfmt_rpt_pix: if true, vertical formatter using repeat to get the pixel, otherwise using interpolation.
16	R/W	0	src1_cvfmt_en: vertical formatter enable.
15-8	R/W	0	src1_x_chr_phase: X direction chroma phase, Bit[15:12] for x direction even start/end chroma phase when y/c ratio = 2 or start/end even/odd chroma phase when y/c ratio = 1; Bit[11:8] for x direction odd start/end chroma phase only when y/c ration = 2.
7-0	R/W	0	src1_y_chr_phase:Y direction chroma phase. Bit[7:4] for y direction even start/end chroma phase when y/c ratio = 2 or start/end even/odd chroma phase when y/c ratio = 1; Bit[3:0] for y direction odd start/end chroma phase only when y/c ration = 2.

Table 8-16 GE2D_SRC2_DEF_COLOR 0x8AF

Bit(s)	R/W	Default	Description
31-24	R/W	0	Default Y or R.
23-16	R/W	0x80	Default Cb or G.
15-8	R/W	0x80	Default Cr or B.
7-0	R/W	0	Default Alpha.

Table 8-17 GE2D_SRC2_CLIPX_START_END 0x8B0

Bit(s)	R/W	Default	Description
31-29	R	0	Unused.
28-16	R/W	0	SRC2 clip x start.
15-13	R	0	Unused.
12-0	R/W	0x1FFF	SRC2 clip x end.

Amlogic Proprietary and Confidential
Copyright © Amlogic. All rights reserved.

Table 8-18 GE2D_SRC2_CLIPY_START_END 0x8B1

Bit(s)	R/W	Default	Description
31-29	R	0	Unused.
28-16	R/W	0	SRC2 clip y start.
15-13	R	0	Unused.
12-0	R/W	0x1FFF	SRC2 clip y end.

Table 8-19 GE2D_SRC2_X_START_END 0x8B2

Bit(s)	R/W	Default	Description
31-29	R	0	Unused.
28-16	R/W	0	SRC2 x start.
15-13	R	0	Unused.
12-0	R/W	0	SRC2 x end.

Table 8-20 GE2D_SRC2_Y_START_END 0x8B3

Bit(s)	R/W	Default	Description
31-29	R	0	Unused.
28-16	R/W	0	SRC2 y start.
15-13	R	0	Unused.
12-0	R/W	0	SRC2 y end.

Table 8-21 GE2D_DST_CLIPX_START_END 0x8B4

Bit(s)	R/W	Default	Description
31-29	R	0	Unused.
28-16	R/W	0	DST clip x start.
15-13	R	0	Unused.
12-0	R/W	0x1FFF	DST clip x end.

Table 8-22 GE2D_DST_CLIPY_START_END 0x8B5

Bit(s)	R/W	Default	Description
31-29	R	0	Unused.
28-16	R/W	0	DST clip y start.
15-13	R	0	Unused.
12-0	R/W	0x1FFF	DST clip y end.

Amlogic Proprietary and Confidential
Copyright © Amlogic. All rights reserved.

Table 8-23 GE2D_DST_X_START_END 0x8B6

Bit(s)	R/W	Default	Description
31-29	R	0	Unused.
28-16	R/W	0	DST x start.
15-13	R	0	Unused.
12-0	R/W	0	DST x end.

Table 8-24 GE2D_DST_Y_START_END 0x8B7

Bit(s)	R/W	Default	Description
31-29	R	0	Unused.
28-16	R/W	0	DST y start.
15-13	R	0	Unused.
12-0	R/W	0	DST y end.

Table 8-25 GE2D_SRC2_DST_CANVAS 0x8B8

Bit(s)	R/W	Default	Description
31-27	R	0	Unused.
26	R/W	0	Dst2 32blk
25	R/W	0	Src2 32blk
23	R/W	0	Dst1 32blk
23-16	R/W	0	DST2 canvas address.
15-8	R/W	0	SRC2 canvas address.
7-0	R/W	0	DST1 canvas address.

Table 8-26 GE2D_VSC_START_PHASE_STEP 0x8B9

Bit(s)	R/W	Default	Description
31-29	R	0	Unused.
28-0	R/W	0x0100-0000	5.24 format.

Table 8-27 GE2D_VSC_PHASE_SLOPE 0x8BA

Bit(s)	R/W	Default	Description
31-25	R	0	Unused.
24-0	R/W	0	Signed data.

Amlogic Proprietary and Confidential
Copyright © Amlogic. All rights reserved.

Table 8-28 GE2D_VSC_INI_CTRL 0x8BB

Bit(s)	R/W	Default	Description
31	R	0	Unused.
30-29	R/W	0	vertical repeat line0 number.
28-24	R	0	Unused.
24	R/W	0	Rpt last ln mode
23-0	R/W	0	vertical scaler initial phase.

Table 8-29 GE2D_HSC_START_PHASE_STEP 0x8BC

Bit(s)	R/W	Default	Description
31-29	R	0	Unused.
28-0	R/W	0x0100-0000	5.24 format.

Table 8-30 GE2D_HSC_PHASE_SLOPE 0x8BD

Bit(s)	R/W	Default	Description
31-25	R	0	Unused.
24-0	R/W	0	Signed data.

Table 8-31 GE2D_HSC_INI_CTRL 0x8BE

Bit(s)	R/W	Default	Description
31	R	0	Unused.
30-29	R/W	0	horizontal repeat line0 number.
28	R	0	Unused.
27-24	R/W	0	advance number in this round, if horizontal scaler is working on dividing mode. (hsc_adv_num[11:8])
23-0	R/W	0	horizontal scaler initial phase.

Table 8-32 GE2D_HSC_ADV_CTRL 0x8BF

Bit(s)	R/W	Default	Description
31-24	R/W	0	advance number in this round, if horizontal scaler is working on dividing mode. (hsc_avd_num[7:4])
23-0	R/W	0	horizontal scaler advance phase in this round, if horizontal scaler is working on dividing mode.

Amlogic Proprietary and Confidential
Copyright © Amlogic. All rights reserved.

Table 8-33 GE2D_SC_MISC_CTRL 0x8C0

Bit(s)	R/W	Default	Description
31	R	0	Unused.
30	R/W	0	vsc_nearest_en: vertical nearest mode enable, must set vt_bank_length = 4.
29	R/W	0	hsc_nearest_en: horizontal nearest mode enable, must set hz_bank_length = 4.
28	R/W	0	hsc_div_en: horizontal scaler dividing mode enable.
27-15	R/W	0	hsc_div_length: horizontal dividing length, if bit 25 is enable.
14	R/W	0	pre horizontal scaler enable.
13	R/W	0	pre vertical scale enable.
12	R/W	0	vertical scale enable.
11	R/W	0	horizontal scaler enable.
10	R	0	Unused.
9	R/W	0	HSc_rpt_ctrl: if true, treat horizontal repeat line number(GE2D_HSC_INI_CTRL bit 30:29) as repeating line, otherwise using treat horizontal repeat line number as minus line number.
8	R/W	0	VSc_rpt_ctrl: if true, treat vertical repeat line number(GE2D_VSC_INI_CTRL bit 30:29) as repeating line, otherwise using treat vertical repeat line number as minus line number.
7	R/W	0	vsc_phase0_always_en: if true, always use phase0 in vertical scaler.
6-4	R/W	2	vsc_bank_length: vertical scaler bank length.
3	R/W	0	hsc_phase0_always_en: if true, always use phase0 in horizontal scaler.
2-0	R/W	2	hsc_bank_length: horizontal scaler bank length.

Table 8-34 GE2D_VSC_NRND_POINT 0x8C1

Bit(s)	R/W	Default	Description
31-14	R	0	Unused.
13-0	R	0	vertical scaler next round integer pixel pointer, signed data.

Table 8-35 GE2D_VSC_NRND_PHASE 0x8C2

Bit(s)	R/W	Default	Description
31-24	R	0	Unused.
23-0	R	0	vertical scaler next round phase.

Table 8-36 GE2D_HSC_NRND_POINT 0x8C3

Bit(s)	R/W	Default	Description
31-14	R	0	Unused.
13-0	R	0	horizontal scaler next round integer pixel pointer, signed data.

Amlogic Proprietary and Confidential
Copyright © Amlogic. All rights reserved.

Table 8-37 GE2D_HSC_NRND_PHASE 0x8C4

Bit(s)	R/W	Default	Description
31-24	R	0	Unused.
23-0	R	0	horizontal scaler next round phase.

Table 8-38 GE2D_MATRIX_PRE_OFFSET 0x8C5

Bit(s)	R/W	Default	Description
31-29	R	0	Unused.
28-20	R/W	0	pre_offset0.
19	R	0	Unused.
18-10	R/W	0	pre_offset1.
9	R	0	Unused.
8-0	R/W	0	pre_offset2.

Table 8-39 GE2D_MATRIX_COEF00_01 0x8C6

Bit(s)	R/W	Default	Description
31-29	R	0	Unused.
28-16	R/W	0	coef00.
15-13	R	0	Unused.
12-0	R/W	0	coef01.

Table 8-40 GE2D_MATRIX_COEF02_10 0x8C7

Bit(s)	R/W	Default	Description
31-29	R	0	Unused.
28-16	R/W	0	Coef02.
15-13	R	0	Unused.
12-0	R/W	0	Coef10.

Table 8-41 GE2D_MATRIX_COEF11_12 0x8C8

Bit(s)	R/W	Default	Description
31-29	R	0	Unused.
28-16	R/W	0	Coef11.
15-13	R	0	Unused.
12-0	R/W	0	Coef12.

Amlogic Proprietary and Confidential
Copyright © Amlogic. All rights reserved.

Table 8-42 GE2D_MATRIX_COEF20_21 0x8C9

Bit(s)	R/W	Default	Description
31-29	R	0	Unused.
28-16	R/W	0	Coef20.
15-13	R	0	Unused.
12-0	R/W	0	Coef21.

Table 8-43 GE2D_MATRIX_COEF22_CTRL 0x8CA

Bit(s)	R/W	Default	Description
31-29	R	0	Unused.
28-16	R/W	0	coef22.
15-8	R	0	Unused.
7	R/W	0	input y/cb/cr saturation enable.
6-1	R	0	Unused.
0	R/W	0	conversion matrix enable.

Table 8-44 GE2D_MATRIX_OFFSET 0x8CB

Bit(s)	R/W	Default	Description
31-29	R	0	Unused.
28-20	R/W	0	offset0.
19	R	0	Unused.
18-10	R/W	0	offset1.
9	R	0	Unused.
8-0	R/W	0	offset2.

Table 8-45 GE2D_ALU_OP_CTRL 0x8CC

Bit(s)	R/W	Default	Description
31-29	R	0	Unused.
28-27	R/W	0	Src2 Ad mux. 0:Ad=Adr*Ag, 1:Ad=Adr*Ag*Adr*Ag, 2:Ad=Adr*Ag*Adr, 3:Ad = 1
26-25	R/W	0	SRC1 color multiplier alpha selection. if 00, Cs = Csr if 01, Cs = Csr * Asr * Ag (if source is not premultiplied) if 10, Cs = Csr * Ag (if source is premultipied).
24-23	R/W	0	SRC2 color multiplier alpha selection. 0: Cd=Cdr, 1:Cd=Cdr*Adr*Adg, 2:Cd=Cdr*Adg
22-12	R/W	0x010	ALU color operation. Bit[22:20] Blending Mode Parameter. 3'b000: ADD Cs*Fs + Cd*Fd 3'b001: SUBTRACT Cs*Fs - Cd*Fd 3'b010: REVERSE SUBTRACT Cd*Fd - Cs*Fs 3'b011: MIN min(Cs*Fs, Cd*Fd) 3'b100: MAX max(Cs*Fs, Cd*Fd) 3'b101: LOGIC OP Cs op Cd

Amlogic Proprietary and Confidential
Copyright © Amlogic. All rights reserved.

Bit(s)	R/W	Default	Description
			3'b110: DARKEN Cs*Fs + Cd*Fd + min(Cs,Cd) 3'b111: LIGHTEN Cs*Fs + Cd*Fd + max(Cs,Cd) .... reserved Bit[19:16] Source Color Blending Factor CFs. 4'b0000: ZERO 0 4'b0001: ONE 1 4'b0010: SRC_COLOR Cs(RGBs) 4'b0011: ONE_MINUS_SRC_COLOR 1 - Cs(RGBs) 4'b0100: DST_COLOR Cd(RGBd) 4'b0101: ONE_MINUS_DST_COLOR 1 - Cd(RGBd) 4'b0110: SRC_ALPHA As 4'b0111: ONE_MINUS_SRC_ALPHA 1 – As 4'b1000: DST_ALPHA Ad 4'b1001: ONE_MINUS_DST_ALPHA 1 – Ad 4'b1010: CONST_COLOR Cc(RGBc) 4'b1011: ONE_MINUS_CONST_COLOR 1 - Cc(RGBc) 4'b1100: CONST_ALPHA Ac 4'b1101: ONE_MINUS_CONST_ALPHA 1 – Ac 4'b1110: SRC_ALPHA_SATURATE min(As,1-Ad) .... reserved Bit[15:12] dest Color Blending Factor CFd, when bit[22:20]!= LOGIC OP. 4'b0000: ZERO 0 4'b0001: ONE 1 4'b0010: SRC_COLOR Cs(RGBs) 4'b0011: ONE_MINUS_SRC_COLOR 1 - Cs(RGBs) 4'b0100: DST_COLOR Cd(RGBd) 4'b0101: ONE_MINUS_DST_COLOR 1 - Cd(RGBd) 4'b0110: SRC_ALPHA As 4'b0111: ONE_MINUS_SRC_ALPHA 1 – As 4'b1000: DST_ALPHA Ad 4'b1001: ONE_MINUS_DST_ALPHA 1 – Ad 4'b1010: CONST_COLOR Cc(RGBc) 4'b1011: ONE_MINUS_CONST_COLOR 1 - Cc(RGBc) 4'b1100: CONST_ALPHA Ac 4'b1101: ONE_MINUS_CONST_ALPHA 1 – Ac 4'b1110: SRC_ALPHA_SATURATE min(As,1-Ad) .... reserved Bit[15:12] logic operations, when bit[22:20]== LOGIC OP. 4'b0000: CLEAR 0 4'b0001: COPY s 4'b0010: NOOP d 4'b0011: SET 1 4'b0100: COPY_INVERT ~s 4'b0101: INVERT ~d 4'b0110: AND_REVERSE s & ~d 4'b0111: OR_REVERSE s | ~d 4'b1000: AND s & d 4'b1001: OR s | d 4'b1010: NAND ~(s & d) 4'b1011: NOR ~(s | d) 4'b1100: XOR s ^ d 4'b1101: EQUIV ~(s ^ d) 4'b1110: AND_INVERTED ~s & d 4'b1111: OR_INVERTED ~s | d
11	R	0	Unused.

Amlogic Proprietary and Confidential
Copyright © Amlogic. All rights reserved.

Bit(s)	R/W	Default	Description
10-0	R/W	0x010	ALU alpha operation. Bit[10:8] Blending Equation Math Operation. 3'b000: ADD As*Fs + Ad*Fd 3'b001: SUBTRACT As*Fs - Ad*Fd 3'b010: REVERSE SUBTRACT Ad*Fd - As*Fs 3'b011: MIN min(As*Fs, Ad*Fd) 3'b100: MAX max(As*Fs, Ad*Fd) 3'b101: LOGIC OP As op Ad .... reserved Bit[7:4] Source alpha Blending Factor AFs. 4'b0000 0 4'b0001 1 4'b0010 As 4'b0011 1 - As 4'b0100 Ad 4'b0101 1 – Ad 4'b0110 Ac 4'b0111 1 – Ac .... reserved Bit[3:0] Destination alpha Blending Factor AFd, when bit[10:8] != LOGIC OP. 4'b0000 0 4'b0001 1 4'b0010 As 4'b0011 1 - As 4'b0100 Ad 4'b0101 1 - Ad 4'b0110 Ac 4'b0111 1 - Ac .... reserved Bit[3:0] logic operations, when bit[10:8] == LOGIC OP. 4'b0000: CLEAR 0 4'b0001: COPY s 4'b0010: NOOP d 4'b0011: SET 1 4'b0100: COPY_INVERT ~s 4'b0101: INVERT ~d 4'b0110: AND_REVERSE s & ~d 4'b0111: OR_REVERSE s | ~d 4'b1000: AND s & d 4'b1001: OR s | d 4'b1010: NAND ~(s & d) 4'b1011: NOR ~(s | d) 4'b1100: XOR s ^ d 4'b1101: EQUIV ~(s ^ d) 4'b1110: AND_INVERTED ~s & d 4'b1111: OR_INVERTED ~s | d

Table 8-46 GE2D_ALU_CONST_COLOR 0x8CD

Bit(s)	R/W	Default	Description
31-0	R/W	0x0080-8000	RGBA or YCbCrA.

Table 8-47 GE2D_SRC1_KEY 0x8CE

Bit(s)	R/W	Default	Description
31-0	R/W	0	SRC1 Key.

Amlogic Proprietary and Confidential
Copyright © Amlogic. All rights reserved.

Table 8-48 GE2D_SRC1_KEY_MASK 0x8CF

Bit(s)	R/W	Default	Description
31-0	R/W	0	SRC1 Key Mask.

Table 8-49 GE2D_SRC2_KEY 0x8D0

Bit(s)	R/W	Default	Description
31-0	R/W	0	SRC2 Key.

Table 8-50 GE2D_SRC2_KEY_MASK 0x8D1

Bit(s)	R/W	Default	Description
31-0	R/W	0	SRC2 Key Mask.

Table 8-51 GE2D_DST_BITMASK 0x8D2

Bit(s)	R/W	Default	Description
31-0	R/W	0	Destination Bit Mask.

Table 8-52 GE2D_DP_ONOFF_CTRL 0x8D3

Bit(s)	R/W	Default	Description
31	R/W	0	DP onoff mode. 0: on_counter means how many pixels will output before ge2d turns off; 1: on_counter means how many clocks will ge2d turn on before ge2d turns off.
30-16	R/W	0	DP on counter.
15	R/W	0	0: vd_format doesnt have onoff mode, 1: vd format has onoff mode.
14-0	R/W	0	DP off counter.

Table 8-53 GE2D_SCALE_COEF_IDX 0x8D4

Because there are many coefficients used in the vertical filter and horizontal filters, indirect access the coefficients of vertical filter and horizontal filter is used. For vertical filter, there are 33x4 coefficients. For horizontal filter, there are 33x4 coefficients.

Bit(s)	R/W	Default	Description
31-16	R	0	Unused.
15	R/W	0	index increment, if bit9 == 1 then (0: index increase 1, 1: index increase 2) else (index increase 2).
14	R/W	0	1: read coef through cbus enable, just for debug purpose in case when we wanna check the coef in ram in correct or not.
13-10	R	0	Unused.
9	R/W	0	if true, use 9bit resolution coef, other use 8bit resolution coef.
8	R/W	0	type of index, 0: vertical coef; 1: horizontal coef.

Amlogic Proprietary and Confidential
Copyright © Amlogic. All rights reserved.

Bit(s)	R/W	Default	Description
7	R	0	Unused.
6-0	R/W	0	coef index.

Table 8-54 GE2D_SCALE_COEF 0x8D5

Bit(s)	R/W	Default	Description
31-0	R/W	0	coefficients for vertical filter and horizontal filter.

Table 8-55 GE2D_SRC_OUTSIDE_ALPHA 0x8D6

Bit(s)	R/W	Default	Description
31-25	R	0	Unused.
24	R/W	0	src2 alpha fill mode: together with GE2D_GEN_CTRL0[14](fill_mode), define what alpha values are used. 0: repeat innner alpha, 1: fill src2 outside alpha. for the area outside the clipping window. As below: fill_mode=0, alpha_fill_mode=0 : use inner alpha, (or default_alpha if src data have no alpha values); fill_mode=0, alpha_fill_mode=1 : use outside_alpha; fill_mode=1, alpha_fill_mode=0 : use default_alpha; fill_mode=1, alpha_fill_mode=1 : use outside_alpha.
23-16	R/W	16	src2 outside alpha.
15-9	R	0	Unused.
8	R/W	1	src1 alpha fill mode, refer to src2 alpha fill mode above.
7-0	R/W	0	src1 outside alpha.

Table 8-56 GE2D_ANTIFLICK_CTRL0 0x8D8

Bit(s)	R/W	Default	Description
31	R/W	0	antiflick enable
24	R/W	0	1: alpha value for the first line use repeated alpha, 0: use bit 23:16 as the first line alpha
23-16	R/W	0	register value for the first line alpha when bit 24 is 1.
8	R/W	0	1: alpha value for the last line use repeated alpha, 0: use bit 7:0 as the last line alpha
7-0	R/W	0	register value for the last line alpha when bit 8 is 1.

Table 8-57 GE2D_ANTIFLICK_CTRL1 0x8D9

Bit(s)	R/W	Default	Description
25	R/W	0	rgb_sel, 1: antiflick RGBA, 0: antiflick YCbCrA
24	R/W	0	cbcr_en, 1: also filter cbcr in case of antiflicking YCbCrA, 0: no filter on cbcr in case of antiflicking YCbCrA
23-16	R/W	0	R mult coef for converting RGB to Y

Amlogic Proprietary and Confidential
Copyright © Amlogic. All rights reserved.

Bit(s)	R/W	Default	Description
15- 8	R/W	0	G mult coef for converting RGB to Y
7-0	R/W	0	B mult coef for converting RGB to Y

Y = (R * y_r + G * y_g + B * y_b) / 256

Table 8-58 GE2D_ANTIFLICK_COLOR_FILT0 0x8DA

Bit(s)	R/W	Default	Description
31-24	R/W	0	Y threhold1, when 0<Y<=th1, use filter0.
23-16	R/W	0	color antiflick filter0 n3
15- 8	R/W	0	color antiflick filter0 n2
7-0	R/W	0	color antiflick filter0 n1

Y = (line_up * n1 + line_center * n2 + line_dn * n3) / 128

Table 8-59 GE2D_ANTIFLICK_COLOR_FILT1 0x8DB

Bit(s)	R/W	Default	Description
31-24	R/W	0	Y threhold2, when th1<Y<=th2, use filter1.
23-16	R/W	0	color antiflick filter1 n3
15- 8	R/W	0	color antiflick filter1 n2
7-0	R/W	0	color antiflick filter1 n1

Table 8-60 GE2D_ANTIFLICK_COLOR_FILT2 0x8DC

Bit(s)	R/W	Default	Description
31-24	R/W	0	Y threhold3, when th2<Y<=th3, use filter2 ; Y>th3, use filter3.
23-16	R/W	0	color antiflick filter2 n3
15- 8	R/W	0	color antiflick filter2 n2
7-0	R/W	0	color antiflick filter2 n1

Table 8-61 GE2D_ANTIFLICK_COLOR_FILT3 0x8DD

Bit(s)	R/W	Default	Description
23-16	R/W	0	color antiflick filter3 n3
15- 8	R/W	0	color antiflick filter3 n2
7-0	R/W	0	color antiflick filter3 n1

Table 8-62 GE2D_ANTIFLICK_ALPHA_FILT0 0x8DE

Bit(s)	R/W	Default	Description
31-24	R/W	0	Alpha threhold1, when 0< Alpha<=th1, use filter0.
23-16	R/W	0	Alpha antiflick filter0 n3

Amlogic Proprietary and Confidential
Copyright © Amlogic. All rights reserved.

Bit(s)	R/W	Default	Description
15- 8	R/W	0	Alpha antiflick filter0 n2
7-0	R/W	0	Alpha antiflick filter0 n1

Alpha = (line_up * n1 + line_center * n2 + line_dn * n3) / 128

Table 8-63 GE2D_ANTIFLICK_ALPHA_FILT1 0x8DF

Bit(s)	R/W	Default	Description
31-24	R/W	0	Alpha threhold2, when th1< Alpha<=th2, use filter1.
23-16	R/W	0	Alpha antiflick filter1 n3
15- 8	R/W	0	Alpha antiflick filter1 n2
7-0	R/W	0	Alpha antiflick filter1 n1

Table 8-64 GE2D_ANTIFLICK_ALPHA_FILT2 0x8E0

Bit(s)	R/W	Default	Description
31-24	R/W	0	Alpha threhold3, when th2< Alpha<=th3, use filter2; Alpha>th3, use filter3.
23-16	R/W	0	Alpha antiflick filter2 n3
15- 8	R/W	0	Alpha antiflick filter2 n2
7-0	R/W	0	Alpha antiflick filter2 n1

Table 8-65 GE2D_ANTIFLICK_ALPHA_FILT3 0x8E1

Bit(s)	R/W	Default	Description
23-16	R/W	0	Alpha antiflick filter3 n3
15- 8	R/W	0	Alpha antiflick filter3 n2
7-0	R/W	0	Alpha antiflick filter3 n1

Table 8-66 GE2D_SRC1_RANGE_MAP_Y_CTRL 0x8E3

Bit(s)	R/W	Default	Description
30-22	R/W	0	din_offset (signed data)
21-14	R/W	0	map_coef (unsigned data)
13- 10	R/W	0	map_sr (unsigned data)
9-1	R/W	0	dout_offset (signed data)
0	R/W	0	enable

dout = clipto_0_255(((din + din_offset) * map_coef + ((1 << (map_sr - 1))) >> map_sr + dout_offset)

Amlogic Proprietary and Confidential
Copyright © Amlogic. All rights reserved.

Table 8-67 GE2D_SRC1_RANGE_MAP_CB_CTRL 0x8E4

Bit(s)	R/W	Default	Description
30-22	R/W	0	din_offset (signed data)
21-14	R/W	0	map_coef (unsigned data)
13- 10	R/W	0	map_sr (unsigned data)
9-1	R/W	0	dout_offset (signed data)
0	R/W	0	enable

dout = clipto_0_255(((din + din_offset) * map_coef + ((1 << (map_sr - 1))) >> map_sr + dout_offset)

Table 8-68 GE2D_SRC1_RANGE_MAP_CR_CTRL 0x8E5

Bit(s)	R/W	Default	Description
30-22	R/W	0	din_offset (signed data)
21-14	R/W	0	map_coef (unsigned data)
13- 10	R/W	0	map_sr (unsigned data)
9-1	R/W	0	dout_offset (signed data)
0	R/W	0	enable

dout = clipto_0_255(((din + din_offset) * map_coef + ((1 << (map_sr - 1))) >> map_sr + dout_offset)

Table 8-69 GE2D_ARB_BURST_NUM 0x8E6

Bit(s)	R/W	Default	Description
21-16	R/W	0x3f	Src1 prearbitor burst number
13-8	R/W	0x3f	Src2 prearbitor burst number
5-0	R/W	0x3f	dst prearbitor burst number

Table 8-70 GE2D_TID_TOKEN 0x8E7

Bit(s)	R/W	Default	Description
21-16	R/W	0x3f	Src1 ID. High 4bit are thread ID, low 2bits are the token
13-8	R/W	0x3f	Src2 ID. High 4bit are thread ID, low 2bits are the token
5-0	R/W	0x3f	dst ID. High 4bit are thread ID, low 2bits are the token

Table 8-71 GE2D_GEN_CTRL3 0x8E8

Bit(s)	R/W	Default	Description
31-28	R/W	0	dst2_bytemask_val: 1-bit mask for each byte (8-bit). Applicable only if both dst_ bitmask_en=1 and dst_bytemask_only=1.
27-26	R/W	0	dst2_pic_struct: Define how destination 2 write the picture to DDR memory. 0: Write all lines (whole frame); 1: Reserved; 2: Write even lines only (top);

Amlogic Proprietary and Confidential
Copyright © Amlogic. All rights reserved.

Bit(s)	R/W	Default	Description
			3: Write odd lines only (bottom).
25-24	R/W	0	dst2_8b_mode_sel: Destination 8-bit mode component selection. 0: Select Y or R; 1: Select Cb or G; 2: Select Cr or B; 3: Select Alpha.
23	R	0	Unused
22-19	R/W	0	dst2_color_map: Applicable to 16-bit, 24-bit and 32-bit pixel, defines the bit-field allocation of the pixel data. For whether to truncate or round full 8-bit to output, refer to ge2d_gen_ctrl3.dst2_color_round_mode. For 16-bit mode (dst2_format=1): 0 = Unused; 1 = 6:5:5 format. Bit[15:10] is Y [7:2] or R[7:2], bit[9:5] is Cb[7:3] or G[7:3], bit[4:0] is Cr[7:3] or B[7:3]; 2 = 8:4:4 format. Bit[15:8] is Y or R, bit[7:4] is Cb[7:4] or G[7:4], bit[3:0] is Cr[7:4] or B[7:4]]; 3 = 6:4:4:2 format. Bit[15:10] is Y[7:2] or R[7:2], bit[9:6] is Cb[7:4] or G[7:4], bit [5:2] is Cr[7:4] or B[7:4], bit[1:0] is Alpha[7:6]; 4 = 4:4:4:4 format. Bit[15:12] is Y [7:4] or R[7:4], bit[11:8] is Cb[7:4] or G[7:4], bit[7:4] is Cr[7:4] or B[7:4], bit[3:0] is Alpha[7:4]; 5 = 5:6:5 format. Bit[15:11] is Y[7:3] or R[7:3], bit[10:5] is Cb[7:2] or G [7:2], bit[4:0] is Cr[7:3] or B[7:3]; 6 = 4:4:4:4 format. Bit[15:12] is Alpha[7:4], bit [11:8] is Y[7:4] or R[7:4], bit[7:4] is Cb[7:4] or G[7:4], bit[3:0] is Cr[7:4] or B[7:4]; 7 = 1:5:5:5 format. Bit[15] is Alpha[7], bit[14:10] is Y[7:3] or R[7:3], bit[9:5] is Cb [7:3] or G[7:3], bit[4:0] is Cr[7:3] or B[7:3]; 8 = 4:6:4:2 format. Bit[15:12] is Y[7:4] or R[7:4], bit[11:6] is Cb[7:2] or G[7:2], bit[5:2] is Cr[7:4] or B[7:4], bit[1:0] is Alpha [1:0]; 9 = CbCr format. Bit[15:8] is Cb, bit[7:0] is Cr; 10 = CrCb format. Bit[15:8] is Cr, bit[7:0] is Cb. For 24-bit mode (dst2_format=2): 0 = RGB 8:8:8 mode. Bit [23:16] is Y or R, bit[15:8] is Cb or G, bit[7:0] is Cr or B; 1 = RGBA 5:6:5:8 mode. Bit[23:19] is Y[7:3] or R[7:3], bit[18:13] is Cb[7:2] or G[7:2], bit[12:8] is Cr[7:3] or B[7:3], bit[7:0] is Alpha; 2 = ARGB 8:5:6:5 mode. Bit[23:16] is Alpha, bit[15:11] is Y[7:3] or R[7:3], bit[10:5] is Cb[7:2] or G[7:2], bit[4:0] is Cr[7:3] or B[7:3]; 3 = RGBA 6:6:6:6 mode. Bit[23:18] is Y[7:2] or R[7:2], bit[17:12] is Cb[7:2] or G[7:2], bit[11:6] is Cr[7:2] or B[7:2], bit[5:0] is Alpha[7:2]; 4 = ARGB 6:6:6:6 mode. Bit [23:18] is Alpha[7:2];, bit[17:12] is Y[7:2] or R[7:2], bit[11:6] is Cb[7:2] or G[7:2], bit[5:0] is Cr[7:2] or B[7:2]; 5 = BGR 8:8:8 mode. Bit[23:16] is Cr or B, bit[15:8] is Cb or G, bit[7:0] is Y or R. For 32-bit mode (dst2_format=3): 0 = RGBA 8:8:8:8 format. Bit[31:24] is Y or R, bit[23:16] is Cb or G; bit[15:8] is Cr or B; bit[7:0] is Alpha; 1 = ARGB 8:8:8:8 format. Bit[31:24] is Alpha, bit[23:16] is Y or R; bit[15:8] is Cb or G; bit[7:0] is Cr or B; 2 = ABGR 8:8:8:8 format. Bit[31:24] is Alpha, bit [23:16] is Cr or B; bit[15:8] is Cb or G; bit[7:0] is Y or R; 3 = BGRA 8:8:8:8 format. Bit[31:24] is Cr or B, bit[23:16] is Cb or G; bit[15:8] is Y or R; bit[7:0] is Alpha.
18	R	0	Unused
17-16	R/W	0	dst2_format: define DST2 output pixel byte-width. 0: Output pixel is 1-byte (8-bit) color component; 1: Output pixel is 2-byte (16-bit), refer to GE2D_GEN_CTRL3.dst2_COLOR_ map for further pixel color mapping; 2: Output pixel is 3-byte (24-bit), refer to GE2D_GEN_CTRL3.dst2_COLOR_ MAP for further pixel color mapping; 3: Output pixel is 4-byte (32-bit), refer to GE2D_GEN_CTRL3.dst2_COLOR_ MAP for further pixel color mapping.
15	R	0	Unused
14	R/W	0	dst2_COLOR_round_MODE. 1 = Truncate the full bit color components to required output bit width; 0 = Round (+ 0.5) the full bit color components to required output bit width.
13-12	R/W	0	dst2_x_discard_mode: Define how DST2 discard X direction data before writing to DDR. Note: x is post reverse/rotation. 0: No discard; 1: Reserved; 2: discard even x; 3: discard odd x.
11-10	R/W	0	dst2_y_discard_mode: Define how DST2 discard Y direction data before writing to DDR.

Amlogic Proprietary and Confidential
Copyright © Amlogic. All rights reserved.

Bit(s)	R/W	Default	Description
			Note: y is post reverse/rotation. 0: No discard; 1: Reserved; 2: discard even y; 3: discard odd y.
9	R	0	Unused
8	R/W	0	dst2_enable: 0: Disable destination 2; 1: Enable destination 2.
7-6	R	0	Unused
5-4	R/W	0	dst1_x_discard_mode: Define how DST1 discard X direction data before writing to DDR. Note: x is post reverse/rotation. 0: No discard; 1: Reserved; 2: discard even x; 3: discard odd x.
3-2	R/W	0	dst1_y_discard_mode: Define how DST1 discard Y direction data before writing to DDR. Note: y is post reverse/rotation. 0: No discard; 1: Reserved; 2: discard even y; 3: discard odd y.
1	R	0	Unused
0	R/W	1	dst1_enable: 0: Disable destination 1; 1: Enable destination 1.

Table 8-72 GE2D_STATUS2 0x8E9

Bit(s)	R/W	Default	Description
13-12	R	0	ge2d_dst1.ctrl_status
11	R	0	ge2d_dst1.map_srdy
10	R	0	ge2d_dst1.map_d1_srdy
9	R	0	ge2d_dst1.s_v
8	R	0	ge2d_dst1.ofifo_dout_srdy
7-1	R	0	ge2d_dst1.ofifo_cnt
0	R	0	ge2d_dst1.dst_busy

Table 8-73 GE2D_GEN_CTRL4 0x8EA

Bit(s)	R/W	Default	Description
28	R/W	0	am2axi_len4_mode
0	R/W	0	dis_dp_hang_bugfix.

Amlogic Proprietary and Confidential
Copyright © Amlogic. All rights reserved.

Table 8-74 GE2D_GEN_CTRL5 0x8f1

Bit(s)	R/W	Default	Description
8	R/W	0	Src2_gb_alpha_en
7-0	R/W	0	Src2_gb_alpha

Table 8-75 GE2D_MATRIX2_PRE_OFFSET 0x890

Bit(s)	R/W	Default	Description
31-29	R	0	Unused.
28-20	R/W	0	pre_offset0.
19	R	0	Unused.
18-10	R/W	0	pre_offset1.
9	R	0	Unused.
8-0	R/W	0	pre_offset2.

Table 8-76 GE2D_MATRIX2_COEF00_01 0x891

Bit(s)	R/W	Default	Description
31-29	R	0	Unused.
28-16	R/W	0	coef00.
15-13	R	0	Unused.
12-0	R/W	0	coef01.

Table 8-77 GE2D_MATRIX2_COEF02_10 0x892

Bit(s)	R/W	Default	Description
31-29	R	0	Unused.
28-16	R/W	0	Coef02.
15-13	R	0	Unused.
12-0	R/W	0	Coef10.

Table 8-78 GE2D_MATRIX2_COEF11_12 0x893

Bit(s)	R/W	Default	Description
31-29	R	0	Unused.
28-16	R/W	0	Coef11.
15-13	R	0	Unused.
12-0	R/W	0	Coef12.

Amlogic Proprietary and Confidential
Copyright © Amlogic. All rights reserved.

Table 8-79 GE2D_MATRIX2_COEF20_21 0x894

Bit(s)	R/W	Default	Description
31-29	R	0	Unused.
28-16	R/W	0	Coef20.
15-13	R	0	Unused.
12-0	R/W	0	Coef21.

Table 8-80 GE2D_MATRIX2_COEF22_CTRL 0x895

Bit(s)	R/W	Default	Description
31-29	R	0	Unused.
28-16	R/W	0	coef22.
15-8	R	0	Unused.
7	R/W	0	input y/cb/cr saturation enable.
6	R/w	0	Output signed mode
5-1	R	0	Unused.
0	R/W	0	conversion matrix enable.

Table 8-81 GE2D_MATRIX2_OFFSET 0x896

Bit(s)	R/W	Default	Description
31-29	R	0	Unused.
28-20	R/W	0	offset0.
19	R	0	Unused.
18-10	R/W	0	offset1.
9	R	0	Unused.
8-0	R/W	0	offset2.

Table 8-82 GE2D_MATRIX3_PRE_OFFSET 0x897

Bit(s)	R/W	Default	Description
31-29	R	0	Unused.
28-20	R/W	0	pre_offset0.
19	R	0	Unused.
18-10	R/W	0	pre_offset1.
9	R	0	Unused.
8-0	R/W	0	pre_offset2.

Amlogic Proprietary and Confidential
Copyright © Amlogic. All rights reserved.

Table 8-83 GE2D_MATRIX3_COEF00_01 0x898

Bit(s)	R/W	Default	Description
31-29	R	0	Unused.
28-16	R/W	0	coef00.
15-13	R	0	Unused.
12-0	R/W	0	coef01.

Table 8-84 GE2D_MATRIX3_COEF02_10 0x899

Bit(s)	R/W	Default	Description
31-29	R	0	Unused.
28-16	R/W	0	Coef02.
15-13	R	0	Unused.
12-0	R/W	0	Coef10.

Table 8-85 GE2D_MATRIX3_COEF11_12 0x89a

Bit(s)	R/W	Default	Description
31-29	R	0	Unused.
28-16	R/W	0	Coef11.
15-13	R	0	Unused.
12-0	R/W	0	Coef12.

Table 8-86 GE2D_MATRIX3_COEF20_21 0x89b

Bit(s)	R/W	Default	Description
31-29	R	0	Unused.
28-16	R/W	0	Coef20.
15-13	R	0	Unused.
12-0	R/W	0	Coef21.

Table 8-87 GE2D_MATRIX3_COEF22_CTRL 0x89c

Bit(s)	R/W	Default	Description
31-29	R	0	Unused.
28-16	R/W	0	coef22.
15-8	R	0	Unused.
7	R/W	0	input y/cb/cr saturation enable.
6	R/W	0	Output signed mode
5-1	R	0	Unused.
0	R/W	0	conversion matrix enable.

Amlogic Proprietary and Confidential
Copyright © Amlogic. All rights reserved.

Table 8-88 GE2D_MATRIX3_OFFSET 0x89d

Bit(s)	R/W	Default	Description
31-29	R	0	Unused.
28-20	R/W	0	offset0.
19	R	0	Unused.
18-10	R/W	0	offset1.
9	R	0	Unused.
8-0	R/W	0	offset2.

Table 8-89 GE2D_DST1_BADDR_CTRL 0x8f2

Bit(s)	R/W	Default	Description
31-0	R/W	0	DST1 base address in 64bits.

Table 8-90 GE2D_DST1_STRIDE_CTRL 0x8f3

Bit(s)	R/W	Default	Description
19	R/W	0	Blk32 mode
18-17	R/W	0	DST1 stride mode 0: linear, 1:32x32, 2: 64x32
16-0	R/W	0	DST1 stride size in 64bits.

Table 8-91 GE2D_DST2_BADDR_CTRL 0x8f4

Bit(s)	R/W	Default	Description
31-0	R/W	0	DST2 base address in 64bits.

Table 8-92 GE2D_DST2_STRIDE_CTRL 0x8f5

Bit(s)	R/W	Default	Description
19	R/W	0	Blk32 mode
18-17	R/W	0	DST2 stride mode 0: linear, 1:32x32, 2: 64x32
16-0	R/W	0	DST2 stride size in 64bits.

Table 8-93 GE2D_SRC1_BADDR_CTRL_Y 0x8f6

Bit(s)	R/W	Default	Description
31-0	R/W	0	SRC1 Y_channel base address in 64bits.

Amlogic Proprietary and Confidential
Copyright © Amlogic. All rights reserved.

Table 8-94 GE2D_SRC1_STRIDE_CTRL_Y 0x8f7

Bit(s)	R/W	Default	Description
19	R/W	0	Blk32 mode
18-17	R/W	0	src1 Y stride mode 0: linear, 1:32x32, 2: 64x32
16-0	R/W	0	src1 Y stride size in 64bits.

Table 8-95 GE2D_SRC1_BADDR_CTRL_CB 0x8f8

Bit(s)	R/W	Default	Description
31-0	R/W	0	SRC1 cb_channel base address in 64bits.

Table 8-96 GE2D_SRC1_STRIDE_CTRL_CB 0x8f9

Bit(s)	R/W	Default	Description
19	R/W	0	Blk32 mode
18-17	R/W	0	src1 cb stride mode 0: linear, 1:32x32, 2: 64x32
16-0	R/W	0	src1 cb stride size in 64bits.

Table 8-97 GE2D_SRC1_BADDR_CTRL_CR 0x8fa

Bit(s)	R/W	Default	Description
31-0	R/W	0	SRC1 cr_channel base address in 64bits.

Table 8-98 GE2D_SRC1_STRIDE_CTRL_CR 0x8fb

Bit(s)	R/W	Default	Description
19	R/W	0	Blk32 mode
18-17	R/W	0	src1 cr stride mode 0: linear, 1:32x32, 2: 64x32
16-0	R/W	0	src1 cr stride size in 64bits.

Table 8-99 GE2D_SRC2_BADDR_CTRL 0x8fc

Bit(s)	R/W	Default	Description
31-0	R/W	0	SRC2 base address in 64bits.

Table 8-100 GE2D_SRC2_STRIDE_CTRL 0x8fd

Bit(s)	R/W	Default	Description
19	R/W	0	Blk32 mode
18-17	R/W	0	Src2 stride mode 0: linear, 1:32x32, 2: 64x32
16-0	R/W	0	Src2 stride size in 64bits.

Amlogic Proprietary and Confidential
Copyright © Amlogic. All rights reserved.

9 CVE

9.1 Features

The features of CVE is shown as below.

CVE HW interface

- APB bus
  - Bus 32bits
  - Frequency: max 200MHz, asynchronous with core
  - Function: programming CVE internal registers
- AXI bus
  - Bus 128 bits
  - Frequency: max 666MHz, synchronous with core
  - Function: access command queue, input image, from ddr and output result to DDR
- Interrupt
  - Total 1 bit
  - Level triggered
  - Function: Notify SW command queue has been completed

CVE performance

- Frequency: max 666MHz
- Internal SRAM: 8K bytes
- Support multiple computer vision algorithms

CVE input image format

- SRC_IMAGE_TYPE_YUV420SP
- SRC_IMAGE_TYPE_YUV422SP
- SRC_IMAGE_TYPE_S8C2_PACKAGE
- SRC_IMAGE_TYPE_S8C2_PLANAR
- SRC_IMAGE_TYPE_U8C3_PACKAGE
- SRC_IMAGE_TYPE_U8C3_PLANAR
- SRC_IMAGE_TYPE_YUV444
- SRC_IMAGE_TYPE_U8C1
- SRC_IMAGE_TYPE_S8C1
- SRC_IMAGE_TYPE_S16C1
- SRC_IMAGE_TYPE_U16C1
- SRC_IMAGE_TYPE_S32C1
- SRC_IMAGE_TYPE_U32C1
- SRC_IMAGE_TYPE_S64C1
- SRC_IMAGE_TYPE_U64C1

CVE supported OP list

Amlogic Proprietary and Confidential
Copyright © Amlogic. All rights reserved.

AML_IPC_CVE_DMA	Create DMA(Direct Memory Access) task, support fast copy, interval copy, memory fill, not and luma statistic operation.
AML_IPC_CVE_FILTER	Creates a 5x5 template filter task.
AML_IPC_CVE_CSC	Creates a CSC task for implementing YUV2RGB/ YUV2HSV/YUV2LAB/RGB2YUV/RGB2HSV/ RGB2LAB/RGB2BGR/BGR2RGB conversion.
AML_IPC_CVE_FilterAndCSC	Creates a task combined with 5x5 template filter and YUV2RGB CSC.
AML_IPC_CVE_Sobel	Create a 5x5 filter-template for calculating the Sobel-like gradient.
AML_IPC_CVE_MagAndAng	Create a 5x5 filter template task for calculating the gradient magnitude and angle.
AML_IPC_CVE_MatchBgModel	Matches the background model based on the codebook evolution.
AML_IPC_CVE_DilateorErode	Creates a 5x5 template erode and dilate task for binary images.
AML_IPC_CVE_Thresh	Creates a thresh task for gray-scale images.
AML_IPC_CVE_ALU	Create an arithmetic logic task for input images.
AML_IPC_CVE_Integ	Creates an Integral Image statistics task for gray -scale images.
AML_IPC_CVE_Hist	Create a histogram statistics task for gray-scale images.
AML_IPC_CVE_Thresh_S16	Create a threshold task for S16 data to 8-bit data.
AML_IPC_CVE_Thresh_U16	Create a threshold task for U16 data to 8bit data.
AML_IPC_CVE_16BitTo8Bit	Create a linear conversion task from 16-bit data to 8-bit data.
AML_IPC_CVE_OrdStatFilter	Creates a 3x3 template order statistics filter task for median, maximum, or minimum filtering.
AML_IPC_CVE_Map	Creates a map task for searching for the values in the lookup table corresponding to each pixel in the source image and assigning the values to the pixels.
AML_IPC_CVE_EqualizeHist	Creates a histogram equalization task for gray-scale images.
AML_IPC_CVE_NCC	Creates an NCC coefficient calculation task for two gray-scale images with the same resolution.
AML_IPC_CVE_CCL	Creates a CCL task for binary images.
AML_IPC_CVE_GMM	Create Gaussian mixture model.
AML_IPC_CVE_CannyEdge	Creates a Canny edge extraction task for gray-scale images.
AML_IPC_CVE_LBP	Create an LBP(Local Binary Pattern) computation task.
AML_IPC_CVE_NormGrad	Creates a normalized gradient calculation task. All gradient components are normalized to S8.
AML_IPC_CVE_BulidLKOpticalFlowPyr	Build a multi-layer pyramid for LK optical flow calculation task.
AML_IPC_CVE_LKOptialFlowPyr	Creates a multi-layer pyramid LK optical flow calculation task.

Amlogic Proprietary and Confidential
Copyright © Amlogic. All rights reserved.

AML_IPC_CVE_STCandiCorner	Create an STCandiCorner computation task.
AML_IPC_CVE_SAD	Calculates the SAD of two source images in 4x4, 8x8, or 16x16 blocking mode.
AML_IPC_CVE_GradFg	Calculates the gradient foreground image based on the gradient of the background image and current frame.
AML_IPC_CVE_UpdateBGModel	Updates the internal status of the background model based on the codebook evolution.
AML_IPC_CVE_TOF	Create the depth calibration algorithm for the TOF (time of flight) sensor application.

9.2 Register Description

Each register final address = BASE + address * 4.

cve_top_reg

For below registers the base address is 0xFE08e400.

Table 9-1 CVE_TOP_CTRL_REG0 0x0

Bit(s)	R/W	Default	Description
31-1			reserved
0	R/W	0	reg_cve_start, unsigned, rising edge start cve

Table 9-2 CVE_TOP_CTRL_REG1 0x1

Bit(s)	R/W	Default	Description
31-0			reserved

Table 9-3 CVE_COMMON_CTRL_REG0 0x2

Bit(s)	R/W	Default	Description
31-24	R/W	0	reg_cve_ops, unsigned, indicate which ops
23-21			reserved
20-16	R/W	0	reg_src_image_type, unsigned 1: S8C1; 2: YUV420SP; 3: YUV422SP; 4: YUV420P; 5: YUV422P; 6: S8C2_PACKAGE; 7: S8C2_PLANAR; 8: S16C1.
15-13			reserved
12-8	R/W	0	reg_dst_image_type, unsigned 1: S8C1; 2: YUV420SP; 3: YUV422SP; 4: YUV420P;

Amlogic Proprietary and Confidential
Copyright © Amlogic. All rights reserved.

Bit(s)	R/W	Default	Description
			5: YUV422P; 6: S8C2_PACKAGE; 7: S8C2_PLANAR; 8: S16C1.
7-5			reserved
4	R/W	0	reg_yuv_image_type, unsigned 0: NV21; 1: Nv12.
3-2			reserved
1	R/W	0	reg_compat_input_mode, unsigned 0: input data is u8 0 or 255; 1: input data is u1, 0 or 1.
0	R/W	0	reg_compat_output_mode, unsigned 0: output data is u8 0 or 255; 1: output data is u1, 0 or 1.

Table 9-4 CVE_COMMON_CTRL_REG1_0 0x3

Bit(s)	R/W	Default	Description
31-0	R/W	32'hffffffff	reg_src_ptr_0, unsigned, array to src image,data or mem

Table 9-5 CVE_COMMON_CTRL_REG1_1 0x4

Bit(s)	R/W	Default	Description
31-0	R/W	32'hffffffff	reg_src_ptr_1, unsigned, array to src image,data or mem

Table 9-6 CVE_COMMON_CTRL_REG1_2 0x5

Bit(s)	R/W	Default	Description
31-0	R/W	32'hffffffff	reg_src_ptr_2, unsigned, array to src image,data or mem

Table 9-7 CVE_COMMON_CTRL_REG1_3 0x6

Bit(s)	R/W	Default	Description
31-0	R/W	32'hffffffff	reg_src_ptr_3, unsigned, array to src image,data or mem

Amlogic Proprietary and Confidential
Copyright © Amlogic. All rights reserved.

Table 9-8 CVE_COMMON_CTRL_REG1_4 0x7

Bit(s)	R/W	Default	Description
31-0	R/W	32'hffffffff	reg_src_ptr_4, unsigned, array to src image,data or mem

Table 9-9 CVE_COMMON_CTRL_REG1_5 0x8

Bit(s)	R/W	Default	Description
31-0	R/W	32'hffffffff	reg_src_ptr_5, unsigned, array to src image,data or mem

Table 9-10 CVE_COMMON_CTRL_REG1_6 0x9

Bit(s)	R/W	Default	Description
31-0	R/W	32'hffffffff	reg_src_ptr_6, unsigned, array to src image,data or mem

Table 9-11 CVE_COMMON_CTRL_REG1_7 0xa

Bit(s)	R/W	Default	Description
31-0	R/W	32'hffffffff	reg_src_ptr_7, unsigned, array to src image,data or mem

Table 9-12 CVE_COMMON_CTRL_REG2_0 0xb

Bit(s)	R/W	Default	Description
31-0	R/W	32'hffffffff	reg_dst_ptr_0, unsigned, array to dst image,data or mem

Table 9-13 CVE_COMMON_CTRL_REG2_1 0xc

Bit(s)	R/W	Default	Description
31-0	R/W	32'hffffffff	reg_dst_ptr_1, unsigned, array to dst image,data or mem

Table 9-14 CVE_COMMON_CTRL_REG2_2 0xd

Bit(s)	R/W	Default	Description
31-0	R/W	32'hffffffff	reg_dst_ptr_2, unsigned, array to dst image,data or mem

Amlogic Proprietary and Confidential
Copyright © Amlogic. All rights reserved.

Table 9-15 CVE_COMMON_CTRL_REG2_3 0xe

Bit(s)	R/W	Default	Description
31-0	R/W	32'hffffffff	reg_dst_ptr_3, unsigned, array to dst image,data or mem

Table 9-16 CVE_COMMON_CTRL_REG2_4 0xf

Bit(s)	R/W	Default	Description
31-0	R/W	32'hffffffff	reg_dst_ptr_4, unsigned, array to dst image,data or mem

Table 9-17 CVE_COMMON_CTRL_REG3_0 0x10

Bit(s)	R/W	Default	Description
31-29			reserved
28-16	R/W	1920	reg_src_stride_0, unsigned, to src image stride
15-13			reserved
12-0	R/W	1920	reg_src_stride_1, unsigned, to src image stride

Table 9-18 CVE_COMMON_CTRL_REG3_1 0x11

Bit(s)	R/W	Default	Description
31-29			reserved
28-16	R/W	1920	reg_src_stride_2, unsigned, to src image stride
15-13			reserved
12-0	R/W	1920	reg_src_stride_3, unsigned, to src image stride

Table 9-19 CVE_COMMON_CTRL_REG3_2 0x12

Bit(s)	R/W	Default	Description
31-29			reserved
28-16	R/W	1920	reg_src_stride_4, unsigned, to src image stride
15-13			reserved
12-0	R/W	1920	reg_src_stride_5, unsigned, to src image stride

Amlogic Proprietary and Confidential
Copyright © Amlogic. All rights reserved.

Table 9-20 CVE_COMMON_CTRL_REG3_3 0x13

Bit(s)	R/W	Default	Description
31-29			reserved
28-16	R/W	1920	reg_src_stride_6, unsigned, to src image stride
15-13			reserved
12-0	R/W	1920	reg_src_stride_7, unsigned, to src image stride

Table 9-21 CVE_COMMON_CTRL_REG4_0 0x14

Bit(s)	R/W	Default	Description
31-29			reserved
28-16	R/W	1920	reg_dst_stride_0, unsigned, to dst image stride
15-13			reserved
12-0	R/W	1920	reg_dst_stride_1, unsigned, to dst image stride

Table 9-22 CVE_COMMON_CTRL_REG4_1 0x15

Bit(s)	R/W	Default	Description
31-29			reserved
28-16	R/W	1920	reg_dst_stride_2, unsigned, to dst image stride
15-13			reserved
12-0	R/W	1920	reg_dst_stride_3, unsigned, to dst image stride

Table 9-23 CVE_COMMON_CTRL_REG5 0x16

Bit(s)	R/W	Default	Description
31-29			reserved
28-16	R/W	1920	reg_dst_stride_4, unsigned, to dst image stride
15-0			reserved

Table 9-24 CVE_COMMON_CTRL_REG6 0x17

Bit(s)	R/W	Default	Description
31-30			reserved
29-16	R/W	1920	reg_src_width, unsigned, src image width, use in dma

Amlogic Proprietary and Confidential
Copyright © Amlogic. All rights reserved.

Bit(s)	R/W	Default	Description
15-14			reserved
13-0	R/W	1080	reg_src_height, unsigned, src image height, use in dma

Table 9-25 CVE_COMMON_CTRL_REG7 0x18

Bit(s)	R/W	Default	Description
31-30			reserved
29-16	R/W	1920	reg_dst_width, unsigned, dst image width, use in dma
15-14			reserved
13-0	R/W	1080	reg_dst_height, unsigned, dst image height, use in dma

Table 9-26 CVE_COMMON_CTRL_REG8 0x19

Bit(s)	R/W	Default	Description
31-30			reserved
29-16	R/W	0	reg_cve_crop_xstart, unsigned, crop image, start x
15-14			reserved
13-0	R/W	0	reg_cve_crop_ystart, unsigned, crop image, start y

Table 9-27 CVE_COMMON_CTRL_REG9 0x1a

Bit(s)	R/W	Default	Description
31-30			reserved
29-16	R/W	1920	reg_cve_crop_xsize, unsigned, crop image, size x
15-14			reserved
13-0	R/W	1080	reg_cve_crop_ysize, unsigned, crop image, size y

Table 9-28 CVE_DMA_REG0 0x1b

Bit(s)	R/W	Default	Description
31			reserved
30-28	R/W	0	reg_dma_mode_ctrl, unsigned, 0: direct memory copy; 1: copy with interval bytes; 2, memset using 3 bytes; 3: memset using 8 bytes;

Amlogic Proprietary and Confidential
Copyright © Amlogic. All rights reserved.

Bit(s)	R/W	Default	Description
			4: not; 5: luma.
27-25			reserved
24	R/W	0	reg_dma_set_endmode, unsigned 0: set 3byte, u64val=0x12345678, char[0]=0x78; char[1]=0x56; char[2]=0x34; char[3]=0x12.
23-16	R/W	1	reg_dma_interval_elem-size, unsigned
15-8	R/W	2	reg_dma_interval_hseg-size, unsigned
7-0	R/W	1	reg_dma_interval_vseg-size, unsigned

Table 9-29 CVE_DMA_REG1 0x1c

Bit(s)	R/W	Default	Description
31-0	R/W	32'h11223344	reg_dma_set_u64val_lsb, unsigned

Table 9-30 CVE_DMA_REG2 0x1d

Bit(s)	R/W	Default	Description
31-0	R/W	32'h55667788	reg_dma_set_u64val_ msb, unsigned

Table 9-31 CVE_DMA_REG3 0x1e

Bit(s)	R/W	Default	Description
31-30	R/W	0	reg_cve_caption_stat_ step, unsigned step: 0,1,2,3; model:1/1, 1/2, 1/3,1/4
29-16	R/W	960	reg_dma_interval_xlength, unsigned
15-8	R/W	0	reg_cve_caption_stat_wi-nidx, unsigned, [0,254], current window idx, reg_ cve_caption_stat_winidx < reg_cve_caption_stat_ wincnt
7-0	R/W	255	reg_cve_caption_stat_ wincnt, unsigned, [1,255], maximum 255 windows

Amlogic Proprietary and Confidential
Copyright © Amlogic. All rights reserved.

Table 9-32 CVE_FILTER_REG2 0x1f

Bit(s)	R/W	Default	Description
31-25			reserved
24	R/W	0	reg_filter_uv, unsigned 1: filter; 0: no.
23-22			reserved
21-16	R/W	0	reg_filter_norm_uv, unsigned, the right shift for norm.
15-0			reserved

Table 9-33 CVE_FILTER_REG1_0 0x20

Bit(s)	R/W	Default	Description
31-24	R/W	0	reg_filter_coef_uv_3, signed, fiter weight
23-16	R/W	0	reg_filter_coef_uv_2, signed, fiter weight
15-8	R/W	0	reg_filter_coef_uv_1, signed, fiter weight
7-0	R/W	0	reg_filter_coef_uv_0, signed, fiter weight

Table 9-34 CVE_FILTER_REG1_1 0x21

Bit(s)	R/W	Default	Description
31-24	R/W	0	reg_filter_coef_uv_7, signed, fiter weight
23-16	R/W	0	reg_filter_coef_uv_6, signed, fiter weight
15-8	R/W	0	reg_filter_coef_uv_5, signed, fiter weight
7-0	R/W	0	reg_filter_coef_uv_4, signed, fiter weight

Table 9-35 CVE_FILTER_REG2_3 0x22

Bit(s)	R/W	Default	Description
31-8			reserved
7-0	R/W	0	reg_filter_coef_uv_8, signed, fiter weight

Amlogic Proprietary and Confidential
Copyright © Amlogic. All rights reserved.

Table 9-36 CVE_CSC_REG0 0x23

Bit(s)	R/W	Default	Description
31			reserved
30-28	R/W	0	reg_csc_mode, unsigned 1: YUV2HSV; 2: YUV2LAB; 3: RGB2YUV; 4: RGB2HSV; 5: RGB2LAB.
27-25			reserved
24	R/W	1	reg_csc_gamma, unsigned 1:have gamma
23			reserved
22-20	R/W	0	reg_csc_yuv422toyuv444_mode, unsigned 0: repeat; 1: even repeat, odd avg; 2: even avg, odd repeat; 3:1:2:1; 4:3:1; 5:3:1.
19			reserved
18-16	R/W	0	reg_csc_yuv420toyuv422_mode, unsigned 0: repeat; 1: even repeat, odd avg; 2: even avg, odd repeat; 3: 1:3; 4: 3:1.
15			reserved
14-12	R/W	0	reg_csc_yuv444toyuv422_mode, unsigned 0: even repeat; 1: odd repeat; 2: avg; 3: 1:2:1 left center right; 4: 1:2:1 center right right+1
11			reserved
10-8	R/W	0	reg_csc_yuv422toyuv420_mode, unsigned 0: even repeat; 1: odd repeat; 2: 1:2:1 even; 3: 1:2:1 odd; 4: even avg; 5: odd avg
7-0			reserved

Table 9-37 CVE_CSC_REG 0x24

Bit(s)	R/W	Default	Description
31-30			reserved
29-24	R/W	6'h24	reg_src_u6order, unsigned

Amlogic Proprietary and Confidential
Copyright © Amlogic. All rights reserved.

Bit(s)	R/W	Default	Description
23-22			reserved
21-16	R/W	6'h24	reg_dst_u6order, unsigned
15-0			reserved

Table 9-38 CVE_SOBEL_REG0 0x25

Bit(s)	R/W	Default	Description
31-26			reserved
25-24	R/W	0	reg_sobel_output_mode, unsigned 0: output horizontal and vertical; 1: output horizontal; 2: output vertical
23-0			reserved

Table 9-39 CVE_MAGANDANG_REG0 0x26

Bit(s)	R/W	Default	Description
31-26			reserved
25-24	R/W	0	reg_magandang_output_ctrl, unsigned 0: only magnitude output; 1: magnitude and angle output; 2: hog.
23-17			reserved
16	R/W	0	reg_magandang_mode, unsigned 0: 8 directions; 1: 9 directions.
15-0	R/W	1024	reg_magandang_u16thr, unsigned

Table 9-40 CVE_BGMODE_REG0 0x27

Bit(s)	R/W	Default	Description
31-28			reserved
27-16	R/W	400	reg_bgmodel_u8q4dist_thr, unsigned, Threshold
15-8	R/W	20	reg_bgmodel_u8gray_thr, unsigned, for current frame subtract background
7-6			reserved
5-4	R/W	2	reg_bgmodel_output_ctrl, unsigned, fg; 1: output fg and bg; 2: output fg,bg and fg_gray;

Amlogic Proprietary and Confidential
Copyright © Amlogic. All rights reserved.

Bit(s)	R/W	Default	Description
			3: output fg,bg,fg_gray and two frame diff
3-2			reserved
1-0	R/W	0	reg_bgmodel_ds_mode, unsigned, sample mode; 0: not downsampling; 1: 2*2; 2: 4*4

Table 9-41 CVE_BGMODE_REG1 0x28

Bit(s)	R/W	Default	Description
31-0	R/W	0	ro_bgmodel_fg_pix_num, unsigned, RO, of fore-ground pixel

Table 9-42 CVE_BGMODE_REG2 0x29

Bit(s)	R/W	Default	Description
31-0	R/W	0	ro_bgmodel_sum_lum, un-signed, RO, of all pixel value

Table 9-43 CVE_UPDATEBGMODE_REG0 0x2a

Bit(s)	R/W	Default	Description
31-16	R/W	1000	reg_updatebgmodel_ u16del_thr, unsigned, threshold
15-0	R/W	200	reg_updatebgmodel_ u16frq_thr, unsigned, threshold

Table 9-44 CVE_UPDATEBGMODE_REG1 0x2b

Bit(s)	R/W	Default	Description
31-16	R/W	40	reg_updatebgmodel_ u16interval_thr, unsigned, threshold
15-0	R/W	1310	reg_updatebgmodel_ u0q16lr, unsigned, rate

Table 9-45 CVE_UPDATEBGMODE_REG2 0x2c

Bit(s)	R/W	Default	Description
31-0	R/W	0	ro_updatebgmodel_bg_ pix_num, unsigned, RO, of background pixel

Amlogic Proprietary and Confidential
Copyright © Amlogic. All rights reserved.

Table 9-46 CVE_UPDATEBGMODE_REG3 0x2d

Bit(s)	R/W	Default	Description
31-0	R/W	0	ro_updatebgmodel_bg_ sum_lum, unsigned, RO, of background pixel value

Table 9-47 CVE_ERODEDILATE_REG0 0x2e

Bit(s)	R/W	Default	Description
31-1			reserved
0	R/W	1310	reg_erodedilate_sel, unsigned, ErodeOrDilate op sel; 0: do Erode op; 1: do Dilate op

Table 9-48 CVE_THRESH_REG0 0x2f

Bit(s)	R/W	Default	Description
31-27			reserved
26-24	R/W	0	reg_thresh_mode, unsigned 0: binary; 1: trunc; 2: TO_MINVAL; 3: MIN_MID_MAX; 4: ORI_MID_MAX; 5: MIN_MID_ORI; 6: MIN_ORI_MAX; 7: ORI_MID_ORI
23-16	R/W	128	reg_thresh_u8max_val, unsigned
15-0			reserved

Table 9-49 CVE_THRESH_REG1 0x30

Bit(s)	R/W	Default	Description
31-24	R/W	128	reg_thresh_u8low_thr, unsigned
23-16	R/W	128	reg_thresh_u8high_thr, unsigned
15-8	R/W	128	reg_thresh_u8min_val, unsigned
7-0	R/W	128	reg_thresh_u8mid_val, unsigned

Amlogic Proprietary and Confidential
Copyright © Amlogic. All rights reserved.

Table 9-50 CVE_ALU_REG0 0x31

Bit(s)	R/W	Default	Description
31-19			reserved
18-16	R/W	0	reg_cve_alu_sel, unsigned 0: sub; 1: or; 2: xor; 3: and; 4: add' 5: add_map_255to1
15-10			reserved
9-8	R/W	0	reg_sub_output_mode, unsigned 0: abs; 1: shift; 2: thresh
7-0			reserved

Table 9-51 CVE_ALU_REG1 0x32

Bit(s)	R/W	Default	Description
31-16	R/W	0	reg_add_u0q16x, unsigned
15-0	R/W	65535	reg_add_u0q16y, unsigned

Table 9-52 CVE_INTEG_REG0 0x33

Bit(s)	R/W	Default	Description
31-18			reserved
17-16	R/W	0	reg_integ_out_ctrl, unsigned 0: combine; 1: sum; 2: sqsum
15-1			reserved
0	R/W	0	reg_eqhist_curv_mode, unsigned 0: fw calc; 1: hw calc

Table 9-53 CVE_EQHIST_REG0 0x34

Bit(s)	R/W	Default	Description
31-0	R/W	2071	reg_eqhist_norm

Amlogic Proprietary and Confidential
Copyright © Amlogic. All rights reserved.

Table 9-54 CVE_THRESHS16_REG0 0x35

Bit(s)	R/W	Default	Description
31-26			reserved
25-24	R/W	0	reg_thresh_s16tos8oru8_ mode, unsigned 0: THRESH_S16TOS8_ MIN_MID_MAX; 1: THRESH_S16TOS8_ MIN_ORI_MAX; 2: THRESH_S16TOU8_ MIN_MID_MAX; 3: THRESH_S16TOU8_ MIN_ORI_MAX
23-16	R/W	0	reg_thresh_min_val
15-8	R/W	128	reg_thresh_mid_val
7-0	R/W	255	reg_thresh_max_val

Table 9-55 CVE_THRESHS16_REG1 0x36

Bit(s)	R/W	Default	Description
31-16	R/W	0	reg_thresh_s16lowthr, signed
15-0	R/W	127	reg_thresh_s16highthr, signed

Table 9-56 CVE_THRESHU16_REG0 0x37

Bit(s)	R/W	Default	Description
31-25			reserved
24	R/W	0	reg_thresh_u16tou8_ mode, unsigned 0: u16 To U8 Min_Mid_ Max; 1: U16 To U8 Min_Ori_Max
23-16	R/W	0	reg_thresh_u16_u8min_ val, unsigned
15-8	R/W	0	reg_thresh_u16_u8mid_ val, unsigned
7-0	R/W	0	reg_thresh_u16_u8max_ val, unsigned

Table 9-57 CVE_THRESHU16_REG1 0x38

Bit(s)	R/W	Default	Description
31-16	R/W	0	reg_thresh_u16lowthr, unsigned
15-0	R/W	0	reg_thresh_u16highthr, unsigned

Amlogic Proprietary and Confidential
Copyright © Amlogic. All rights reserved.

Table 9-58 CVE_16BITTO8BIT_REG0 0x39

Bit(s)	R/W	Default	Description
31-26			reserved
25-24	R/W	0	reg_16bitto8bit_mode, unsigned 1: S16TOU8_ABS; 2: S16TOU8_BIAS; 3: U16TOU8
23-0			reserved

Table 9-59 CVE_16BITTO8BIT_REG1 0x3a

Bit(s)	R/W	Default	Description
31-16	R/W	65535	reg_16bitto8bit_ u0q16norm, unsigned
15-8			reserved
7-0	R/W	20	reg_16bitto8bit_s8bias, signed

Table 9-60 CVE_STATFILTER_REG0 0x3b

Bit(s)	R/W	Default	Description
31-26			reserved
25-24	R/W	1	reg_stat_filter_outnum, unsigned 1: output a result; 2: output two results; 3: output three results
23-20			reserved
19-16	R/W	0	reg_stat_filter_outidx0, unsigned 0: filter mode min; 4: filter mode median; 8: filter mode max
15-12			reserved
11-8	R/W	4	reg_stat_filter_outidx1, unsigned 0: filter mode min; 4: filter mode median; 8: filter mode max
7-4			reserved
3-0	R/W	8	reg_stat_filter_outidx2, unsigned 0: filter mode min; 4: filter mode median; 8: filter mode max

Amlogic Proprietary and Confidential
Copyright © Amlogic. All rights reserved.

Table 9-61 CVE_MAP_REG0 0x3c

Bit(s)	R/W	Default	Description
31-26			reserved
25-24	R/W	0	reg_map_mode, unsigned 0: U8□ 1: S16; 2: U16
23-16	R/W	0	reg_ncc_offset0, unsigned, only CVE_NCC_SIMILAR mode needs to add an offset
15-8	R/W	0	reg_ncc_offset1, unsigned, only CVE_NCC_SIMILAR mode needs to add an offset
7-1			reserved
0			reg_ncc_mode, unsigned 0: CVE_NCC_COM; 1: CVE_NCC_SIMILAR

Table 9-62 CVE_NCC_U64NUM_0 0x3d

Bit(s)	R/W	Default	Description
31-0	R/W	0	ro_ncc_u32numerator_lsb, unsigned, RO

Table 9-63 CVE_NCC_U64NUM_1 0x3e

Bit(s)	R/W	Default	Description
31-0	R/W	0	ro_ncc_u32numerator_ msb, unsigned, RO

Table 9-64 CVE_NCC_U64QUADSUM1_0 0x3f

Bit(s)	R/W	Default	Description
31-0	R/W	0	ro_ncc_u32quadsum1_ lsb, unsigned, RO

Table 9-65 CVE_NCC_U64QUADSUM1_1 0x40

Bit(s)	R/W	Default	Description
31-0	R/W	0	ro_ncc_u32quadsum1_ msb, unsigned, RO

Table 9-66 CVE_NCC_U64QUADSUM2_0 0x41

Bit(s)	R/W	Default	Description
31-0	R/W	0	ro_ncc_u32quadsum2_ lsb, unsigned, RO

Amlogic Proprietary and Confidential
Copyright © Amlogic. All rights reserved.

Table 9-67 CVE_NCC_U64QUADSUM2_1 0x42

Bit(s)	R/W	Default	Description
31-0	R/W	0	ro_ncc_u32quadsum2_ msb, unsigned, RO

Table 9-68 CVE_CCL_REG0 0x43

Bit(s)	R/W	Default	Description
31-9			reserved
8-0	R/W	128	ro_ccl_sum, unsigned, RO, max = 383, output to

Table 9-69 CVE_GMM_REG0 0x44

Bit(s)	R/W	Default	Description
31-16	R/W	1024	reg_gmm_u0q16learnrate, unsigned, rate
15-0	R/W	1024	reg_gmm_u0q16initweight, unsigned, Weight

Table 9-70 CVE_GMM_REG1 0x45

Bit(s)	R/W	Default	Description
31-29			reserved
28	R/W	0	reg_gmm_output_bg_en, unsigned 0: output fg only; 1: output fg and bg
27-26			reserved
25-24	R/W	0	reg_gmm_ds_mode, unsigned, down sample mode; 0: not downsampling; 1: 2*2; 2: 4*4
23-16			reserved
15-0	R/W	6400	reg_gmm_u10q6sigma_init, unsigned, Initial noise variance

Table 9-71 CVE_GMM_REG2 0x46

Bit(s)	R/W	Default	Description
31-24			reserved
23-8	R/W	12800	reg_gmm_u10q6sigma_ max, unsigned, Maximum variance

Amlogic Proprietary and Confidential
Copyright © Amlogic. All rights reserved.

Bit(s)	R/W	Default	Description
7			reserved
6-4	R/W	5	reg_gmm_u3modelnum, unsigned The number of models per pixel,1~5, 3 or 5 is recommended
3-2			reserved
1-0	R/W	3	reg_gmm_u2nchannels, unsigned, input channel

Table 9-72 CVE_GMM_REG3 0x47

Bit(s)	R/W	Default	Description
31-16	R/W	3840	reg_gmm_u10q6sigma_ min, unsigned, Minimum variance
15-12			reserved
11-0	R/W	0	reg_gmm_modellen_ in128b, unsigned, much 16bytes is there in a row, rtl use, reg_gmm_mod-ellen_in128b = (scale *xsize * (1 + reg_gmmu3-modelnum*4) + 15) >> 4, scale = (reg_gmm_down-samplemode == 0)

Table 9-73 CVE_GMM_REG4 0x48

Bit(s)	R/W	Default	Description
31-16	R/W	58900	reg_gmm_u0q16weight_ sum_thr, unsigned, Weights threshold
15-10			reserved
9-0	R/W	256	reg_gmm_u3q7sigma_ scale, unsigned, scale

Table 9-74 CVE_GMM_REG5 0x49

Bit(s)	R/W	Default	Description
31	R/W	0	reg_gmm_sns_factor_ mode_en, unsigned 0: global sensitivity mode; 1: pixel sensitivity mode
30-24			reserved
23	R/W	1	reg_gmm_acc_lr_en, unsigned 1: Use fast learning; 0: not use
22-16			reserved

Amlogic Proprietary and Confidential
Copyright © Amlogic. All rights reserved.

Bit(s)	R/W	Default	Description
15	R/W	0	reg_gmm_update_factor_mode_en, unsigned 0: global update mode; 1: pixel update mode
14-12			reserved
11-0	R/W	360	reg_gmm_piclen_in128b, unsigned, ceil (image_width*channel_num / 16)

Table 9-75 CVE_CANNY_REG0 0x4a

Bit(s)	R/W	Default	Description
31-16	R/W	30	reg_canny_u16lowthr, unsigned, Low threshold
15-0	R/W	70	reg_canny_u16highthr, unsigned, high threshold

Table 9-76 CVE_CANNY_REG1 0x4b

Bit(s)	R/W	Default	Description
31-0	R/W	0	ro_canny_count, unsigned, RO, points count

Table 9-77 CVE_CANNY_REG2 0x4c

Bit(s)	R/W	Default	Description
31-25			reserved
24	R/W	0	reg_canny_gauss_en, unsigned, [0,1] 0: don't need to do gaussian filter; 1: need to do gaussian filter
23-0			reserved

Table 9-78 CVE_LBP_REG0 0x4d

Bit(s)	R/W	Default	Description
31-25			reserved
24	R/W	0	reg_cmp_mode, unsigned 0: P(x) - P(center) >= un8BitThr.s8Val, s(x) = 1 ;else s(x) = 0; 1: Abs(P(x) - P(center)) >= un8BitThr.u8Val, s(x) = 1; else s(x) = 0;
23-16	R/W	40	reg_u8bitthr, unsigned, threshold
15-0			reserved

Amlogic Proprietary and Confidential
Copyright © Amlogic. All rights reserved.

Table 9-79 CVE_NORMGRAD_REG0 0x4e

Bit(s)	R/W	Default	Description
31-30			reserved
29-28	R/W	0	reg_normgrad_outmode, unsigned; 1: hor; 2: ver, 3: combine
27-24			reserved
23-16	R/W	0	reg_normgrad_u8norm, unsigned
15-0			reserved

Table 9-80 CVE_BDLK_REG0 0x4f

Bit(s)	R/W	Default	Description
31-27			reserved
26-24	R/W	3	reg_bdlk_maxLevel, unsigned, height [0,3]
23-0			reserved

Table 9-81 CVE_LK_REG0 0x50

Bit(s)	R/W	Default	Description
31-26			reserved
25-24	R/W	0	reg_lk_mode, unsigned, output error or not, 0: not; 2: output error
23-17			reserved
16	R/W	0	reg_lk_buseinitflow, unsigned, Whether to use initial flow
15-10			reserved
9-0	R/W	100	reg_lk_u10pstnum, unsigned, of feature points, <=500

Table 9-82 CVE_LK_REG1 0x51

Bit(s)	R/W	Default	Description
31-26			reserved
25-24	R/W	3	reg_lk_u2maxlevel, unsigned, height [0,3]
23-16	R/W	10	reg_lk_u8itercnt, unsigned, iteration times,<=20

Amlogic Proprietary and Confidential
Copyright © Amlogic. All rights reserved.

Bit(s)	R/W	Default	Description
15-8	R/W	10	reg_u0q8eps, unsigned, for exit criteria, dx^2 +dy^2< u0q8eps
7-0			reserved

Table 9-83 CVE_LK_REG2_0 0x52

Bit(s)	R/W	Default	Description
31-0		32'hffffffff	ro_lk_ststatus_0, unsigned

Table 9-84 CVE_LK_REG2_1 0x53

Bit(s)	R/W	Default	Description
31-0		32'hffffffff	ro_lk_ststatus_1, unsigned

Table 9-85 CVE_LK_REG2_2 0x54

Bit(s)	R/W	Default	Description
31-0		32'hffffffff	ro_lk_ststatus_2, unsigned

Table 9-86 CVE_LK_REG2_3 0x55

Bit(s)	R/W	Default	Description
31-0		32'hffffffff	ro_lk_ststatus_3, unsigned

Table 9-87 CVE_LK_REG2_4 0x56

Bit(s)	R/W	Default	Description
31-0		32'hffffffff	ro_lk_ststatus_4, unsigned

Table 9-88 CVE_LK_REG2_5 0x57

Bit(s)	R/W	Default	Description
31-0		32'hffffffff	ro_lk_ststatus_5, unsigned

Table 9-89 CVE_LK_REG2_6 0x58

Bit(s)	R/W	Default	Description
31-0		32'hffffffff	ro_lk_ststatus_6, unsigned

Amlogic Proprietary and Confidential
Copyright © Amlogic. All rights reserved.

Table 9-90 CVE_LK_REG2_7 0x59

Bit(s)	R/W	Default	Description
31-0		32'hffffffff	ro_lk_ststatus_7, unsigned

Table 9-91 CVE_LK_REG2_8 0x5a

Bit(s)	R/W	Default	Description
31-0		32'hffffffff	ro_lk_ststatus_8, unsigned

Table 9-92 CVE_LK_REG2_9 0x5b

Bit(s)	R/W	Default	Description
31-0		32'hffffffff	ro_lk_ststatus_9, unsigned

Table 9-93 CVE_LK_REG2_10 0x5c

Bit(s)	R/W	Default	Description
31-0		32'hffffffff	ro_lk_ststatus_10, unsigned

Table 9-94 CVE_LK_REG2_11 0x5d

Bit(s)	R/W	Default	Description
31-0		32'hffffffff	ro_lk_ststatus_11, unsigned

Table 9-95 CVE_LK_REG2_12 0x5e

Bit(s)	R/W	Default	Description
31-0		32'hffffffff	ro_lk_ststatus_12, unsigned

Table 9-96 CVE_LK_REG2_13 0x5f

Bit(s)	R/W	Default	Description
31-0		32'hffffffff	ro_lk_ststatus_13, unsigned

Table 9-97 CVE_LK_REG2_14 0x60

Bit(s)	R/W	Default	Description
31-0		32'hffffffff	ro_lk_ststatus_14, unsigned

Amlogic Proprietary and Confidential
Copyright © Amlogic. All rights reserved.

Table 9-98 CVE_LK_REG2_15 0x61

Bit(s)	R/W	Default	Description
31-0		32'hffffffff	ro_lk_ststatus_15, unsigned

Table 9-99 CVE_LK_REG2_16 0x62

Bit(s)	R/W	Default	Description
31-0		32'hffffffff	ro_lk_ststatus_16, unsigned

Table 9-100 CVE_STCORNER_REG0 0x63

Bit(s)	R/W	Default	Description
31-0		0	ro_st_u32pointnum, unsigned, RO, max corner number in image

Table 9-101 CVE_SAD_REG0 0x64

Bit(s)	R/W	Default	Description
31-10			reserved
9-8	R/W	0	reg_sad_mode, unsigned 0: 4x4; 1: 8x8; 2: 16x16
7-0	R/W	128	reg_sad_u8minval, unsigned

Table 9-102 CVE_SAD_REG1 0x65

Bit(s)	R/W	Default	Description
31-16	R/W	128	reg_sad_u16thr, unsigned
15-8	R/W	128	reg_sad_u8maxval, unsigned
7-4			reserved
3-0	R/W	2	reg_sad_u4rightshift, unsigned

Table 9-103 CVE_GRADFG_REG0 0x66

Bit(s)	R/W	Default	Description
31-26			reserved
25-24	R/W	0	reg_gradfg_mode, unsigned, output control

Amlogic Proprietary and Confidential
Copyright © Amlogic. All rights reserved.

Bit(s)	R/W	Default	Description
23-8			reserved
7-0	R/W	100	reg_gradfg_u8minmagdiff, unsigned, gradient magnitude difference threshold

Table 9-104 CVE_FILTER_REG0_0 0x67

Bit(s)	R/W	Default	Description
31-24	R/W	0	reg_filter_coef_3, signed, coef for filter
23-16	R/W	0	reg_filter_coef_2, signed, coef for filter
25-8	R/W	0	reg_filter_coef_1, signed, coef for filter
7-0	R/W	0	reg_filter_coef_0, signed, coef for filter

Table 9-105 CVE_FILTER_REG0_1 0x68

Bit(s)	R/W	Default	Description
31-24	R/W	0	reg_filter_coef_7, signed, coef for filter
23-16	R/W	0	reg_filter_coef_6, signed, coef for filter
25-8	R/W	0	reg_filter_coef_5, signed, coef for filter
7-0	R/W	0	reg_filter_coef_4, signed, coef for filter

Table 9-106 CVE_FILTER_REG0_2 0x69

Bit(s)	R/W	Default	Description
31-24	R/W	0	reg_filter_coef_11, signed, coef for filter
23-16	R/W	0	reg_filter_coef_10, signed, coef for filter
25-8	R/W	0	reg_filter_coef_9, signed, coef for filter
7-0	R/W	0	reg_filter_coef_8, signed, coef for filter

Table 9-107 CVE_FILTER_REG0_2 0x6a

Bit(s)	R/W	Default	Description
31-24	R/W	0	reg_filter_coef_15, signed, coef for filter
23-16	R/W	0	reg_filter_coef_14, signed, coef for filter

Amlogic Proprietary and Confidential
Copyright © Amlogic. All rights reserved.

Bit(s)	R/W	Default	Description
25-8	R/W	0	reg_filter_coef_13, signed, coef for filter
7-0	R/W	0	reg_filter_coef_12, signed, coef for filter

Table 9-108 CVE_FILTER_REG0_3 0x6b

Bit(s)	R/W	Default	Description
31-24	R/W	0	reg_filter_coef_19, signed, coef for filter
23-16	R/W	0	reg_filter_coef_18, signed, coef for filter
25-8	R/W	0	reg_filter_coef_17, signed, coef for filter
7-0	R/W	0	reg_filter_coef_16, signed, coef for filter

Table 9-109 CVE_FILTER_REG0_4 0x6c

Bit(s)	R/W	Default	Description
31-24	R/W	0	reg_filter_coef_23, signed, coef for filter
23-16	R/W	0	reg_filter_coef_22, signed, coef for filter
25-8	R/W	0	reg_filter_coef_21, signed, coef for filter
7-0	R/W	0	reg_filter_coef_20, signed, coef for filter

Table 9-110 CVE_FILTER_REG0_5 0x6d

Bit(s)	R/W	Default	Description
31-24	R/W	0	reg_filter_coef_24, signed, coef for filter
23-6			reserved
5-0	R/W	0	reg_filter_norm, unsigned, filter then right shift for norm.

Table 9-111 CVE_CSC_REG1 0x6e

Bit(s)	R/W	Default	Description
31-20			reserved
19-10	R/W	0	reg_csc_offset_inp_1, signed
9-0	R/W	0	reg_csc_offset_inp_0, signed

Amlogic Proprietary and Confidential
Copyright © Amlogic. All rights reserved.

Table 9-112 CVE_CSC_REG1_1 0x6f

Bit(s)	R/W	Default	Description
31-10			reserved
9-0	R/W	0	reg_csc_offset_inp_2, signed

Table 9-113 CVE_CSC_REG2_0 0x70

Bit(s)	R/W	Default	Description
31-22	R/W	0	reg_csc_3x3matrix_0_0, signed
21			reserved
20-11	R/W	0	reg_csc_3x3matrix_1_0, signed
10			reserved
9-0	R/W	0	reg_csc_3x3matrix_2_0, signed

Table 9-114 CVE_CSC_REG2_1 0x71

Bit(s)	R/W	Default	Description
31-22	R/W	0	reg_csc_3x3matrix_0_1, signed
21			reserved
20-11	R/W	0	reg_csc_3x3matrix_1_1, signed
10			reserved
9-0	R/W	0	reg_csc_3x3matrix_2_1, signed

Table 9-115 CVE_CSC_REG2_2 0x72

Bit(s)	R/W	Default	Description
31-22	R/W	0	reg_csc_3x3matrix_0_2, signed
21			reserved
20-11	R/W	0	reg_csc_3x3matrix_1_2, signed
10			reserved
9-0	R/W	0	reg_csc_3x3matrix_2_2, signed

Amlogic Proprietary and Confidential
Copyright © Amlogic. All rights reserved.

Table 9-116 CVE_CSC_REG3 0x73

Bit(s)	R/W	Default	Description
31-20			reserved
19-10	R/W	0	reg_csc_offset_oup_1, signed
9-0	R/W	0	reg_csc_offset_oup_0, signed

Table 9-117 CVE_CSC_REG3_1 0x74

Bit(s)	R/W	Default	Description
31-26			reserved
25-16	R/W	0	reg_csc_offset_oup_2, signed
15-3			reserved
2-0	R/W	0	reg_csc_3x3mtrx_rs, unsigned 0: s3.8; 1: s2.9; 2: s1.10 3: s0.11

Table 9-118 CVE_SOBEL_REG1_0 0x75

Bit(s)	R/W	Default	Description
31-30			reserved
29-24	R/W	0	reg_sobel_coef_h_3, signed
23-22			reserved
21-16	R/W	0	reg_sobel_coef_h_2, signed
15-14			reserved
13-8	R/W	0	reg_sobel_coef_h_1, signed
7-6			reserved
5-0	R/W	0	reg_sobel_coef_h_0, signed

Table 9-119 CVE_SOBEL_REG1_1 0x76

Bit(s)	R/W	Default	Description
31-30			reserved
29-24	R/W	0	reg_sobel_coef_h_7, signed
23-22			reserved
21-16	R/W	0	reg_sobel_coef_h_6, signed

Amlogic Proprietary and Confidential
Copyright © Amlogic. All rights reserved.

Bit(s)	R/W	Default	Description
15-14			reserved
13-8	R/W	0	reg_sobel_coef_h_5, signed
7-6			reserved
5-0	R/W	0	reg_sobel_coef_h_4, signed

Table 9-120 CVE_SOBEL_REG1_2 0x77

Bit(s)	R/W	Default	Description
31-30			reserved
29-24	R/W	0	reg_sobel_coef_h_11, signed
23-22			reserved
21-16	R/W	0	reg_sobel_coef_h_10, signed
15-14			reserved
13-8	R/W	0	reg_sobel_coef_h_9, signed
7-6			reserved
5-0	R/W	0	reg_sobel_coef_h_8, signed

Table 9-121 CVE_SOBEL_REG1_3 0x78

Bit(s)	R/W	Default	Description
31-30			reserved
29-24	R/W	0	reg_sobel_coef_h_15, signed
23-22			reserved
21-16	R/W	0	reg_sobel_coef_h_14, signed
15-14			reserved
13-8	R/W	0	reg_sobel_coef_h_13, signed
7-6			reserved
5-0	R/W	0	reg_sobel_coef_h_12, signed

Amlogic Proprietary and Confidential
Copyright © Amlogic. All rights reserved.

Table 9-122 CVE_SOBEL_REG1_4 0x79

Bit(s)	R/W	Default	Description
31-30			reserved
29-24	R/W	0	reg_sobel_coef_h_19, signed
23-22			reserved
21-16	R/W	0	reg_sobel_coef_h_18, signed
15-14			reserved
13-8	R/W	0	reg_sobel_coef_h_17, signed
7-6			reserved
5-0	R/W	0	reg_sobel_coef_h_16, signed

Table 9-123 CVE_SOBEL_REG1_5 0x7a

Bit(s)	R/W	Default	Description
31-30			reserved
29-24	R/W	0	reg_sobel_coef_h_23, signed
23-22			reserved
21-16	R/W	0	reg_sobel_coef_h_22, signed
15-14			reserved
13-8	R/W	0	reg_sobel_coef_h_21, signed
7-6			reserved
5-0	R/W	0	reg_sobel_coef_h_20, signed

Table 9-124 CVE_SOBEL_REG1_6 0x7b

Bit(s)	R/W	Default	Description
31-6			reserved
5-0	R/W	0	reg_sobel_coef_h_24, signed

Table 9-125 CVE_SOBEL_REG2_0 0x7c

Bit(s)	R/W	Default	Description
31-30			reserved
29-24	R/W	0	reg_sobel_coef_v_3, signed
23-22			reserved

Amlogic Proprietary and Confidential
Copyright © Amlogic. All rights reserved.

Bit(s)	R/W	Default	Description
21-16	R/W	0	reg_sobel_coef_v_2, signed
15-14			reserved
13-8	R/W	0	reg_sobel_coef_v_1, signed
7-6			reserved
5-0	R/W	0	reg_sobel_coef_v_0, signed

Table 9-126 CVE_SOBEL_REG2_1 0x7d

Bit(s)	R/W	Default	Description
31-30			reserved
29-24	R/W	0	reg_sobel_coef_v_7, signed
23-22			reserved
21-16	R/W	0	reg_sobel_coef_v_6, signed
15-14			reserved
13-8	R/W	0	reg_sobel_coef_v_5, signed
7-6			reserved
5-0	R/W	0	reg_sobel_coef_v_4, signed

Table 9-127 CVE_SOBEL_REG2_2 0x7e

Bit(s)	R/W	Default	Description
31-30			reserved
29-24	R/W	0	reg_sobel_coef_v_11, signed
23-22			reserved
21-16	R/W	0	reg_sobel_coef_v_10, signed
15-14			reserved
13-8	R/W	0	reg_sobel_coef_v_9, signed
7-6			reserved
5-0	R/W	0	reg_sobel_coef_v_8, signed

Amlogic Proprietary and Confidential
Copyright © Amlogic. All rights reserved.

Table 9-128 CVE_SOBEL_REG2_3 0x7f

Bit(s)	R/W	Default	Description
31-30			reserved
29-24	R/W	0	reg_sobel_coef_v_15, signed
23-22			reserved
21-16	R/W	0	reg_sobel_coef_v_14, signed
15-14			reserved
13-8	R/W	0	reg_sobel_coef_v_13, signed
7-6			reserved
5-0	R/W	0	reg_sobel_coef_v_12, signed

Table 9-129 CVE_SOBEL_REG2_4 0x80

Bit(s)	R/W	Default	Description
31-30			reserved
29-24	R/W	0	reg_sobel_coef_v_19, signed
23-22			reserved
21-16	R/W	0	reg_sobel_coef_v_18, signed
15-14			reserved
13-8	R/W	0	reg_sobel_coef_v_17, signed
7-6			reserved
5-0	R/W	0	reg_sobel_coef_v_16, signed

Table 9-130 CVE_SOBEL_REG2_5 0x81

Bit(s)	R/W	Default	Description
31-30			reserved
29-24	R/W	0	reg_sobel_coef_v_23, signed
23-22			reserved
21-16	R/W	0	reg_sobel_coef_v_22, signed
15-14			reserved
13-8	R/W	0	reg_sobel_coef_v_21, signed

Amlogic Proprietary and Confidential
Copyright © Amlogic. All rights reserved.

Bit(s)	R/W	Default	Description
7-6			reserved
5-0	R/W	0	reg_sobel_coef_v_20, signed

Table 9-131 CVE_SOBEL_REG2_6 0x82

Bit(s)	R/W	Default	Description
31-6			reserved
5-0	R/W	0	reg_sobel_coef_h_24, signed

Table 9-132 CVE_TOF_REG0 0x83

Bit(s)	R/W	Default	Description
31-26			reserved
25-16	R/W	0	reg_cve_tof_hist_x_start, unsigned, range for calc hist,start x
15-10			reserved
9-0	R/W	0	reg_cve_tof_hist_y_start, unsigned, range for calc hist,start y

Table 9-133 CVE_TOF_REG1 0x84

Bit(s)	R/W	Default	Description
31-26			reserved
25-16	R/W	320	reg_cve_tof_hist_x_end, unsigned, range for calc hist,end x
15-10			reserved
9-0	R/W	320	reg_cve_tof_hist_y_end, unsigned, range for calc hist,end y

Table 9-134 CVE_TOF_REG3_0 0x85

Bit(s)	R/W	Default	Description
31-24			reserved
23-0	R/W	0	reg_cve_tof_p_coef_0, signed

Amlogic Proprietary and Confidential
Copyright © Amlogic. All rights reserved.

Table 9-135 CVE_TOF_REG3_1 0x86

Bit(s)	R/W	Default	Description
31-24			Reserved
23-0	R/W	0	reg_cve_tof_p_coef_1, signed

Table 9-136 CVE_TOF_REG3_2 0x87

Bit(s)	R/W	Default	Description
31-24			reserved
23-0	R/W	0	reg_cve_tof_p_coef_2, signed

Table 9-137 CVE_TOF_REG3_3 0x88

Bit(s)	R/W	Default	Description
31-24			reserved
23-0	R/W	0	reg_cve_tof_p_coef_3, signed

Table 9-138 CVE_TOF_REG3_4 0x89

Bit(s)	R/W	Default	Description
31-24			reserved
23-0	R/W	0	reg_cve_tof_p_coef_4, signed

Table 9-139 CVE_TOF_REG4 0x8a

Bit(s)	R/W	Default	Description
31-28			reserved
27-16	R/W	0	reg_cve_tof_t_coef1_0, signed
15-9			reserved
8-0	R/W	0	reg_cve_tof_t_coef1_1, signed

Table 9-140 CVE_TOF_REG5 0x8b

Bit(s)	R/W	Default	Description
31-28			reserved
27-16	R/W	0	reg_cve_tof_t_coef1_2, signed

Amlogic Proprietary and Confidential
Copyright © Amlogic. All rights reserved.

Bit(s)	R/W	Default	Description
15-9			reserved
8-0	R/W	0	reg_cve_tof_t_coef1_3, signed

Table 9-141 CVE_TOF_REG9_0 0x8c

Bit(s)	R/W	Default	Description
31-24			reserved
23-16	R/W	0	reg_cve_tof_spa_mask_0, unsigned, mask
15-8	R/W	0	reg_cve_tof_spa_mask_1, unsigned, mask
7-0	R/W	0	reg_cve_tof_spa_mask_2, unsigned, mask

Table 9-142 CVE_TOF_REG9_1 0x8d

Bit(s)	R/W	Default	Description
31-24			reserved
23-16	R/W	0	reg_cve_tof_spa_mask_3, unsigned, mask
15-8	R/W	0	reg_cve_tof_spa_mask_4, unsigned, mask
7-0	R/W	0	reg_cve_tof_spa_mask_5, unsigned, mask

Table 9-143 CVE_TOF_REG9_2 0x8e

Bit(s)	R/W	Default	Description
31-24			reserved
23-16	R/W	0	reg_cve_tof_spa_mask_6, unsigned, mask
15-8	R/W	0	reg_cve_tof_spa_mask_7, unsigned, mask
7-0	R/W	0	reg_cve_tof_spa_mask_8, unsigned, mask

Table 9-144 CVE_TOF_REG9_3 0x8f

Bit(s)	R/W	Default	Description
31-24			reserved
23-16	R/W	0	reg_cve_tof_spa_mask_9, unsigned, mask

Amlogic Proprietary and Confidential
Copyright © Amlogic. All rights reserved.

Bit(s)	R/W	Default	Description
15-8	R/W	0	reg_cve_tof_spa_mask_10, unsigned, mask
7-0	R/W	0	reg_cve_tof_spa_mask_11, unsigned, mask

Table 9-145 CVE_TOF_REG9_4 0x90

Bit(s)	R/W	Default	Description
31-24			reserved
23-16	R/W	0	reg_cve_tof_spa_mask_12, unsigned, mask
15-8	R/W	0	reg_cve_tof_spa_mask_13, unsigned, mask
7-0	R/W	0	reg_cve_tof_spa_mask_14, unsigned, mask

Table 9-146 CVE_TOF_REG10 0x91

Bit(s)	R/W	Default	Description
31-27			reserved
26-24	R/W	4	reg_cve_tof_raw_mode, unsigned 0: RAW6, 1: RAW7, 2: RAW8, 3: RWA10, 4: RWA12, 5: RAW14
23-16	R/W	0	reg_cve_tof_spa_norm, unsigned, coefficient,up to spa_mask
15-9			reserved

Table 9-147 CVE_TOF_REG11 0x92

Bit(s)	R/W	Default	Description
31-24			reserved
23-16	R/W	20	reg_cve_tof_temperature_int, signed, temperature
15-8			reserved
7-0	R/W	20	reg_cve_tof_temperature_ext, signed, temperature

Amlogic Proprietary and Confidential
Copyright © Amlogic. All rights reserved.

Table 9-148 CVE_TOF_REG12 0x93

Bit(s)	R/W	Default	Description
31-28			reserved
27-16	R/W	0	reg_cve_tof_q1_high_thr, unsigned
15-12			reserved
11-0	R/W	0	reg_cve_tof_q23_high_thr, unsigned

Table 9-149 CVE_TOF_REG13 0x94

Bit(s)	R/W	Default	Description
31-28			reserved
27-16	R/W	0	reg_cve_tof_ir_high_thr, unsigned
15-12			reserved
11-0	R/W	0	reg_cve_tof_ir_low_thr, unsigned

Table 9-150 CVE_TOF_REG14 0x95

Bit(s)	R/W	Default	Description
31-16	R/W	0	reg_cve_tof_dis_max, unsigned, depth
15-0	R/W	0	reg_cve_tof_dis_min, unsigned, depth

Table 9-151 CVE_TOF_REG15 0x96

Bit(s)	R/W	Default	Description
31-25			reserved
24	R/W	0	reg_cve_tof_spa1_en, unsigned, space filter ctrl
23-17			
16	R/W	0	reg_cve_tof_spa2_en, unsigned, space filter ctrl
15-10			reserved
9-8	R/W	1	reg_cve_tof_fpn_cali_mode, unsigned 0: bypass, 1; fpn mode, 2: fd mode

Amlogic Proprietary and Confidential
Copyright © Amlogic. All rights reserved.

Bit(s)	R/W	Default	Description
7-1			reserved
0	R/W	0	eg_cve_tof_bypass_en, unsigned, bypass or not, 1: bypass, 0: not; if bypass_en == 1, spa2_ en and dis_min must be 0, dis_max must be 65535

Table 9-152 CVE_ADD_DSTSUM 0x97

Bit(s)	R/W	Default	Description
31-0		0	ro_cve_add_dstsum, unsigned, RO

Table 9-153 CVE_SUB_AREA 0x98

Bit(s)	R/W	Default	Description
31-0		0	ro_cve_sub_front_area, unsigned, RO

Table 9-154 CVE_SUB_THRESH_RATIO 0x99

Bit(s)	R/W	Default	Description
31-16	R/W	13107	reg_sub_thresh_ratio, unsigned, norm 65536 to 1.0
15-0			reserved

cve_top_hw_reg

For below registers the base address is 0xFE08e000.

Table 9-155 CVE_TOP_HW_CTRL_REG0 0x0

Bit(s)	R/W	Default	Description
31-26			reserved
25-24	R/W	0	reg_clk_gate_ctrl_intr
23-22	R/W	0	reg_clk_gate_ctrl_lut
21-20	R/W	2	reg_clk_gate_ctrl_reg_ top_hw
19-18	R/W	0	reg_clk_gate_ctrl_reg_ wrmif2
17-16	R/W	0	reg_clk_gate_ctrl_reg_ wrmif1
15-14	R/W	0	reg_clk_gate_ctrl_reg_ wrmif
13-12	R/W	0	reg_clk_gate_ctrl_reg_ rdmif2

Amlogic Proprietary and Confidential
Copyright © Amlogic. All rights reserved.

Bit(s)	R/W	Default	Description
11-10	R/W	0	reg_clk_gate_ctrl_reg_ rdmif1
9-8	R/W	0	reg_clk_gate_ctrl_reg_ rdmif
7-6	R/W	0	reg_clk_gate_ctrl_reg_top
5-4	R/W	0	reg_clk_gate_ctrl_cq
3-3	R/W	0	reg_cve_sec_ctrl
2-2	R/W	0	reg_cve_dbg_run_cycles_ en
1-1	R/W	0	reg_ccl_dbg_dis_sec_ pass
0-0	R/W	0	reg_sync_rst

Table 9-156 CVE_TOP_HW_CTRL_REG1 0x1

Bit(s)	R/W	Default	Description
31-0	R/W	0	reg_clk_gate_ctrl_ops_lsb

Table 9-157 CVE_TOP_HW_CTRL_REG2 0x2

Bit(s)	R/W	Default	Description
31-0	R/W	0	reg_clk_gate_ctrl_ops_ msb

Table 9-158 CVE_CQ0 0x3

Bit(s)	R/W	Default	Description
31-0	R/W	0	reg_cq0_baddr

Table 9-159 CVE_CQ1 0x4

Bit(s)	R/W	Default	Description
31-0	R/W	0	reg_cq1_baddr

Table 9-160 CVE_CQ2 0x5

Bit(s)	R/W	Default	Description
31-29			Reserved
28-28	R/O	0	ro_cq1_done
27-27	R/O	0	ro_cq0_done
26-26	R/W	0	reg_cq_en
25-25	R/W	0	reg_sw_cq1_rdy

Amlogic Proprietary and Confidential
Copyright © Amlogic. All rights reserved.

Bit(s)	R/W	Default	Description
24-24	R/W	0	reg_sw_cq0_rdy
23-12	R/W	0	reg_cq1_len
11-0	R/W	0	reg_cq0_len

Table 9-161 CVE_INTR_STAT_WRITE0 0x6

Bit(s)	R/W	Default	Description
31-0	R/W	0	reg_intr_stat_write0

Table 9-162 CVE_INTR_STAT_WRITE1 0x7

Bit(s)	R/W	Default	Description
31-0	R/W	0	reg_intr_stat_write1

Table 9-163 CVE_INTR_STAT_CLR_WRITE0 0x8

Bit(s)	R/W	Default	Description
31-0	R/W	0	reg_intr_stat_clr_write0

Table 9-164 CVE_INTR_STAT_CLR_WRITE1 0x9

Bit(s)	R/W	Default	Description
31-0	R/W	0	reg_intr_stat_clr_write1

Table 9-165 CVE_INTR_MASKN0 0xa

Bit(s)	R/W	Default	Description
31-0	R/W	0	reg_intr_maskn0

Table 9-166 CVE_INTR_MASKN1 0xb

Bit(s)	R/W	Default	Description
31-0	R/W	0	reg_intr_maskn1

Table 9-167 CVE_INTR_STATUS0 0xc

Bit(s)	R/W	Default	Description
31-0	R/O	0	ro_intr_status0

Amlogic Proprietary and Confidential
Copyright © Amlogic. All rights reserved.

Table 9-168 CVE_INTR_STATUS1 0xd

Bit(s)	R/W	Default	Description
31-0	R/O	0	ro_intr_status1

Table 9-169 CVE_OP_ONCE_RUN_CYCLES 0xe

Bit(s)	R/W	Default	Description
31-0	R/O	0	ro_op_once_run_cycles

Table 9-170 CVE_CQ3 0xf

Bit(s)	R/W	Default	Description
31-21			Reserved
20-12	R/W	1	reg_cq1_op_num
11-9			Reserved
8-0	R/W	1	reg_cq0_op_num

Table 9-171 CVE_CQ4 0x10

Bit(s)	R/W	Default	Description
31-9			Reserved
8-0	R/W	0	ro_cq_op_run_idx

Table 9-172 CVE_ID_STA0 0x11

Bit(s)	R/W	Default	Description
31-2			Reserved
1-1	R/W	0	reg_cve_id_sta_en
0-0	R/W	0	reg_cve_id_sta_clr

Table 9-173 CVE_ID_STA1 0x12

Bit(s)	R/W	Default	Description
31-16			Reserved
15-0	R/W	0	ro_cve_op_id

Table 9-174 CVE_TIMEOUT0 0x13

Bit(s)	R/W	Default	Description
31-1			Reserved
0-0	R/W	0	reg_cve_timeout_intr_en

Amlogic Proprietary and Confidential
Copyright © Amlogic. All rights reserved.

Table 9-175 CVE_TIMEOUT1 0x14

Bit(s)	R/W	Default	Description
31-1	R/W	60000000	reg_cve_op_time_thr

Table 9-176 CVE_UTE0 0x15

Bit(s)	R/W	Default	Description
31-2	R/W	600000000	reg_cve_ute_sta_total_ cycles
1-1	R/W	0	reg_cve_timeout_intr_en
0-0	R/W	0	reg_cve_ute_sta_en

Table 9-177 CVE_UTE1 0x16

Bit(s)	R/W	Default	Description
31-30			Reserved
29-0	R/O	0	ro_cve_ute_cycles_in_ total

Table 9-178 CVE_STATUS 0x17

Bit(s)	R/W	Default	Description
31-4			Reserved
3-0	R/O	0	ro_cve_status

Amlogic Proprietary and Confidential
Copyright © Amlogic. All rights reserved.

10 Video Path

10.1 Video Input

10.1.1 Features

Support 16 TS streams from demodulators.

Support 32 TS streams from DDR memory, include TS streams from internet.

Support TS stream local decrypt, network decrypt, local encrypt.

Support multiple TS streams demux and output data in TS, PES or ES format.

Figure 10-1 connect to both demod and buffer

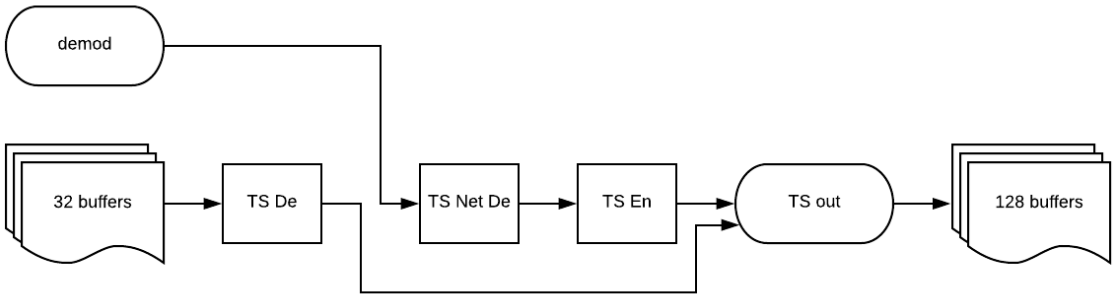

Record programs from Demod and view other programs from Demod or IP buffer

Figure 10-2 connect to demod, play and record

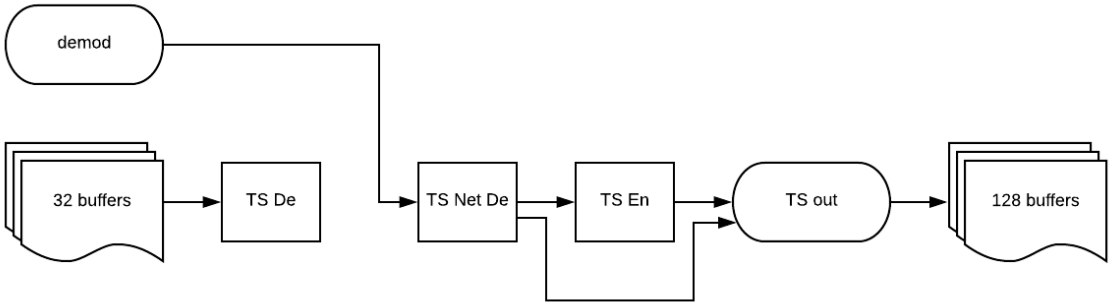

Record and view the same program from Demod, record other programs from Demod, read buffers are not used

Figure 10-3 connect to buffer, play and record

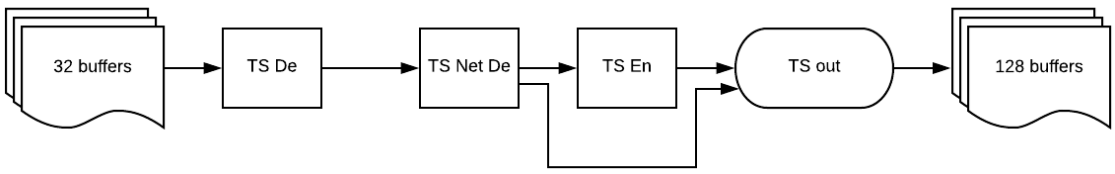

Amlogic Proprietary and Confidential
Copyright © Amlogic. All rights reserved.

Record programs from IP, view programs from IP or buffer.

View and record the same program is achieved by output TSN packets to both TSE and TSOUT, the packets send to TSOUT with the stream SID MSB flipped.

In case of Demod, only the 32~63 are used, after MSB flipped, the SID is converted from 32~63 to 0~31 for view, the original SID packets are encrypted by local TS encryption and saved.

In case of IP Buffers, only the 0~31 are used, after MSB flipped, the SID is converted from 0~31 to 32~63 for view, the original SID packets are encrypted by local TS encryption and saved.

Setup the SIDs based on use case.

10.1.2 TS Input

10.1.2.1 Demodulator TS

Demodulator inputs from PINs or from internal demodulator in serial or parallel format

Multiple TS streams can be muxed by adding extra prefix bytes before input into the SOC, the extra bytes are removed by TS input, a side band signal “stream ID” or “SID” is used to identify different TS streams.

Demod TS packet size:

Table 10-1 demod TS interface format

Mode	Size	Note
Standard	188	Physical connection as SID Support 4 TS inputs
Extra bytes	192, 196, 200	Extract SID from extra bytes Support up to 16 SIDs
Extra RS parity	204	Removed by interface

10.1.2.2 Stream from Memory

If a TS stream is downloaded from internet or read from external storage, it is read from DDR memory by TS demux

TS demux supports up to 32 streams data read from DDR memory, TS packet tagged with SID and sent to TS crypto engine, to avoid the same PID from different stream sent to the same TS, 6 bits stream ID is used to separate the same PID case.

Stream ID combined with PID are used to select crypto algorithm and keys.

Secure level of input stream is the same as memory secure level.

When TS read from a memory location with secure level x, then the data is secure level x.

Table 10-2 DDR buffer interface SID

Source	Stream ID (6 bits)	Secure Level (3 bits)
DDR memory	0~31	The same as memory secure level

Amlogic Proprietary and Confidential
Copyright © Amlogic. All rights reserved.

10.1.3 Crypto Algorithm

Only the following algorithms are supported in TS crypto.

TS Keys are only from Key Table

Host keys, MKL keys, ETSI keys and CAS IP keys are deposited into key table.

Table 10-3 TS descrambler algorithm list

Mode	Algorithm	EMI	TSD 8	TSN 9	TSE 10	IV
0	Pass through	N/A	P	P	P	
1	AES ECB clear end	0021	D	D	E	No IV
2	AES ECB clear front		D	D	E	No IV
3	AES CBC clear end	0022 0023	D	D	E	128 bits
4	AES CBC IDSA	0020	D	D	E	All zero
5	CSA2	0000	-	D	-	No IV
6	DES SCTE41	0031	-	D	-	No IV
7	DES SCTE52	0030	-	D	-	64 bits for CBC 64 bits for short payload
8	TDES ECB clear end	0041	-	D	-	No IV
9	CPCM LSA MDI CBC		D	D	E	MDI
10	CPCM LSA MDD CBC		D	D	E	MDD
11	CSA3	0001	-	D	-	No IV
12	ASA	0010 0011	-	D	-	No IV
13	ASA LIGHT	0012	-	D	-	No IV

Use OTP bits to disable DES SCTE41, DES SCTE52, CSA2, CSA3, CPCM LSA and DES

For mode 3 and mode 7 with 128 bits IV, retrieve the IV from key table IV slots with the flag as IV.

Host deposits the IVs into key table slot 0 to 63.

10.1.4 TS Output

Save TS/PES/ES data into DDR memory by scatter gather memory list.

Support up to 128 buffers, support byte alignment data address and byte length buffers.

Amlogic Proprietary and Confidential
Copyright © Amlogic. All rights reserved.

10.1.4.1 Descriptor

Table 10-4 TS data read/write descriptor

bytes	7	6	5	4	3	2	1	0
0	byte length [23:0]							
1								
2								
3			loop	eoc	irq	Byte length [26:24]		
4	address 32 bits							
5								
6								
7								

Each descriptor is 64 bits, prepared by host and saved in DDR memory, the descriptors are stored in continuous memory address, the last descriptor with end of chain field “eoc” set to 1, or set the loop to 1 to loop back to the beginning of descriptor chain.

Memory access supports byte alignment memory read/write, the address can be any byte alignment and length of memory can be any number of bytes.

Maximum single descriptor memory size is 2^27-1 = 128M-1 bytes.

Loop : next descriptor is from beginning, support descriptor loop, send IRQ out when loop back.

Eoc : end of chain, done, send IRQ out

Irq : send IRQ when this descriptor is done.

The DDR memory interface uses 128 bits data bus, the TS crypto module should read/write fraction of 16 bytes first, then process number of 16 byte and finally with a fraction of 16 bytes.

Figure 10-4 TS output DDR interface

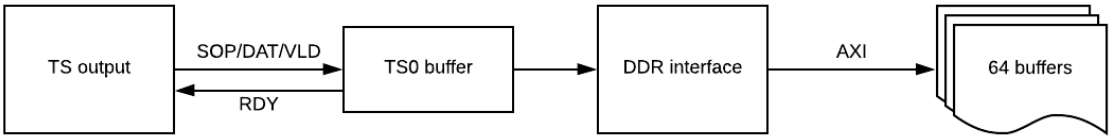

Amlogic Proprietary and Confidential
Copyright © Amlogic. All rights reserved.

10.1.4.2 Output Format

Table 10-5 TS output options

Format	Program	Usage	Details	Secure Level
TS	One	PVR	One program include: Video PID Audio PIDs Subtitle PIDs PCR_PID EMM/ECM PIDs	Encrypted: 0 Clear content: key level
TS	Two+	PVR	Multiple programs	Encrypted: 0 Clear content: key level
TS, PES, ES, PCR registers, PTS/DTS buffer	One	View	Video buffer Audio buffers Subtitle buffers PCR APB registers PTS/DTS buffer	Video ES: key level Audio ES: key level Subtitle: 0 PCR register: 0 PTS/DTS: 0
TS		PAT, EMM, ECM	One SID per buffer	0

10.1.4.3 TS DMA

32 DMA read channels and 128 write channels

Table 10-6 Read channel data structure

Address	Name	Details	Note
0x0	Ready	[0] semaphore	Read 1 to own read channel Write 1 to release read channel
0x4	Debug	Check semaphore	Debug
0x8	RCH_CFG	[28] done [27] enable [26] pause [25] clear [23:16] packet length [15:0] read length	Read length: number of bytes per each round robin
0xC	RCH_ADR	Descriptor address	First descriptor address
0x10	RCH_LEN	Total bytes	
0x14	RCH_RD_LEN	number of bytes read	
0x18	RCH_PTR	Current memory address	

Amlogic Proprietary and Confidential
Copyright © Amlogic. All rights reserved.

Table 10-7 Write channel data structure

Address	Name	Details	Note
0x0	Ready	[0] semaphore	Read 1 to own read channel Write 1 to release read channel
0x4	Debug	Check semaphore	Debug
0x8	WCH_CFG	[25] clear [24] unlimited	
0xC	WCH_ADR	Descriptor address	First descriptor address
0x10	WCH_LEN	Total bytes	
0x14	WCH_RD_LEN	Number of bytes written	
0x18	WCH_PTR	Current memory address	

Read TS stream from DDR memory

Support TS stream packet size 188 or 192, when packet size is 192, the extra 4 bytes between TS packet is removed before sent to TS descrambler.

·Acquire the read channel by read register Ready 0x0 and it is 1.

·Prepare the data descriptor in DDR memory.

·Program the first descriptor address to register RCH_ADR 0xC.

·Total number of bytes to register RCH_LEN 0x10.

·Program RCH_CFG register with packet length, read length and “enable” to 1.

·When done, release Ready by write register 0x0 with 1.

Use similar method to program write channel.

TS DMA APB base address:

APB PADDR[16:14] = 1, APB range 16K bytes

BASE = SECURE_BASE + 0x4000

Table 10-8 read/write channel APB address

APB address	Registers	Note
BASE + RCH_idx * 0x20	32 RCH registers RCH_idx = 0, 1, …, 31	Refer to read channel registers
BASE + 0x1000 + WCH_idx * 0x20	128 WCH registers WCH_idx = 0, 1, ..., 127	Refer to write channel registers
BASE + 0x2000 + Ctrl_register		

Amlogic Proprietary and Confidential
Copyright © Amlogic. All rights reserved.

Table 10-9 read/write control registers

Address	R/W	Name	Details	Note
BASE + 0x2000	R/W	RCH_INT_MASK	RCH = 0 ~ 31	1 : Mask RCH/WCH INT 0 : Send INT to ACPU
BASE + 0x2004	R/W	WCH_INT_MASK0	WCH = 0 ~ 31	
BASE + 0x2008	R/W	WCH_INT_MASK1	WCH = 32 ~ 63	
BASE + 0x200c	R/W	WCH_INT_MASK2	WCH = 64 ~ 95	
BASE + 0x2010	R/W	WCH_INT_MASK3	WCH = 96 ~ 127	
BASE + 0x2014	R/W	CLEAR_W_BATCH0		
BASE + 0x2018	R/W	CLEAR_W_BATCH1		
BASE + 0x201c	R/W	CLEAR_W_BATCH2		
BASE + 0x2020	R/W	CLEAR_W_BATCH3		
BASE + 0x2024	R/W	CLEAR_RCH	RCH = 0 ~ 31	1 : Clear RCH/ WCH status
BASE + 0x2028	R/W	CLEAR_WCH0	WCH = 0 ~ 31	
BASE + 0x202c	R/W	CLEAR_WCH1	WCH = 32 ~ 63	
BASE + 0x2030	R/W	CLEAR_WCH2	WCH = 64 ~ 95	
BASE + 0x2034	R/W	CLEAR_WCH3	WCH = 96 ~ 127	
BASE + 0x2038	R	RCH_ACTIVE	RCH = 0 ~ 31	1 : RCH/WCH active
BASE + 0x203c	R	WCH_ACTIVE0	WCH = 0 ~ 31	
BASE + 0x2040	R	WCH_ACTIVE1	WCH = 32 ~ 63	
BASE + 0x2044	R	WCH_ACTIVE2	WCH = 64 ~ 95	
BASE + 0x2048	R	WCH_ACTIVE3	WCH = 96 ~ 127	
BASE + 0x204C	R	RCH_DONE	RCH = 0 ~ 31	1 : RCH descriptor EOC WCH write RESP received
BASE + 0x2050	R	WCH_DONE0	WCH = 0 ~ 31	
BASE + 0x2054	R	WCH_DONE1	WCH = 32 ~ 63	
BASE + 0x2058	R	WCH_DONE2	WCH = 64 ~ 95	
BASE + 0x205c	R	WCH_DONE3	WCH = 96 ~ 127	
BASE + 0x2060	R	RCH_ERR	RCH = 0 ~ 31	No more RCH descriptor
BASE + 0x2064	R	RCH_LEN_ERR	RCH = 0 ~ 31	RCH descriptor length 0
BASE + 0x2068	R	WCH_ERR0	WCH = 0 ~ 31	WCH descriptor length 0
BASE + 0x206C	R	WCH_ERR1	WCH = 32 ~ 63	
BASE + 0x2070	R	WCH_ERR2	WCH = 64 ~ 95	
BASE + 0x2074	R	WCH_ERR3	WCH = 96 ~ 127	
BASE + 0x2078		DMA_BATCH_END0		
BASE + 0x207C		DMA_BATCH_END0		
BASE + 0x2080		DMA_BATCH_END0		

Amlogic Proprietary and Confidential
Copyright © Amlogic. All rights reserved.

Address	R/W	Name	Details	Note
BASE + 0x2084		DMA_BATCH_END0		
BASE + 0x2088	R	WCH_EOC_DONE0	WCH = 0 ~ 31	WCH descriptor EOC before RESP is received
BASE + 0x208C	R	WCH_EOC_DONE1	WCH = 32 ~ 63	
BASE + 0x2090	R	WCH_EOC_DONE2	WCH = 64 ~ 95	
BASE + 0x2094	R	WCH_EOC_DONE3	WCH = 96 ~ 127	
BASE + 0x2098		UPDT_PKT_SYNC		
BASE + 0x209C		RCH_CFG		
BASE + 0x20A0		WCH_CFG		
BASE + 0x20A4		MEM_PD_CRTL	Memory PD control	
BASE + 0x20A8		DMA_BUS_CFG		
BASE + 0x20AC		DMA_GMW_CFG		
BASE + 0x20B0		DMA_GMR_CFG		

10.1.5 HDMIRX

10.1.5.1 HDMIRX TOP-Level Registers

10.1.5.1.1 Register Access

To access Top-level normal registers, use type uint32_t,

To access Top-Level EDID RAM, use type uint8_t:

```
#define HDMIRX_TOP_ OFFSET0xfe398000
#define HDMIRX_TOP_EDID_ADDR0_S0x1000
#define HDMIRX_TOP_EDID_ADDR2_E0x15ff

void hdmirx_wr_only_TOP (uint32_t addr, uint32_t data)
{
    if ((addr >= HDMIRX_TOP_EDID_ADDR0_S) && (addr <= HDMIRX_TOP_EDID_ADDR2_E)) {
        *((volatile uint8_t *)(HDMIRX_TOP_ OFFSET+addr)) = (uint8_t)(data&0xff);
    } else {
        *((volatile uint32_t *)(HDMIRX_TOP_ OFFSET+addr)) = (data);
    }
}

uint32_t hdmirx_rd_TOP (uint8_t int_ext, uint32_t addr)
{
    uint32_t    data;
    if ((addr >= HDMIRX_TOP_EDID_ADDR0_S) && (addr <= HDMIRX_TOP_EDID_ADDR2_E)) {
        data = (uint32_t)(*((volatile uint8_t *)(HDMIRX_TOP_ OFFSET+addr)));
    } else {
        data = *((volatile uint32_t *)(HDMIRX_TOP_ OFFSET+addr));
    }
    return (data);
}
```

10.1.5.1.2 Register Description

Register Address

For below registers the base address is 0xfe398000.

Each register final address = BASE + address * 4.

The following lists describe the mapping between each register and its address.

Amlogic Proprietary and Confidential
Copyright © Amlogic. All rights reserved.

Address	Register	RW	Function
0x000<<2	HDMIRX_TOP_SW_RESET	RW	Software reset sub-modules.
0x001<<2	HDMIRX_TOP_CLK_CNTL	RW	Clock gating and inversion.
0x002<<2	HDMIRX_TOP_HPD_PWR5V	RW	HPD control and PWR5V status.
0x003<<2	HDMIRX_TOP_PORT_SEL	RW	RX input port selection.
0x004<<2	HDMIRX_TOP_EDID_GEN_ CNTL	RW	EDID control.
0x005<<2	HDMIRX_TOP_EDID_ADDR_ CEC	RW	EDID's CEC bytes auto-replace.
0x006<<2	HDMIRX_TOP_EDID_DATA_ CEC_PORT01	RW	EDID's CEC bytes auto-replace.
0x007<<2	HDMIRX_TOP_EDID_DATA_ CEC_PORT2	RW	EDID's CEC bytes auto-replace.
0x008<<2	HDMIRX_TOP_EDID_GEN_ STAT_A	RW	PortA EDID status.
0x009<<2	HDMIRX_TOP_INTR_MASKN	RW	Interrupt mask.
0x00A<<2	HDMIRX_TOP_INTR_STAT	RW	Interrupt status.
0x00B<<2	HDMIRX_TOP_INTR_STAT_ CLR	RW	Interrupt clear.
0x00C<<2	HDMIRX_TOP_VID_CNTL	RW	Video processing control.
0x00D<<2	HDMIRX_TOP_VID_STAT	R	Video processing status.
0x00E<<2	HDMIRX_TOP_ACR_CNTL_ STAT	RW	ACR control and status.
0x011<<2	HDMIRX_TOP_METER_ HDMI_CNTL	RW	tmds_clk meter control.
0x012<<2	HDMIRX_TOP_METER_ HDMI_STAT	R	tmds_clk meter status.
0x013<<2	HDMIRX_TOP_VID_CNTL2	RW	Video processing control.
0x015<<2	HDMIRX_TOP_EDID_RAM_ OVR0	RW	EDID RAM override byte0 address.
0x016<<2	HDMIRX_TOP_EDID_RAM_ OVR0_DATA	RW	EDID RAM override byte0 data.
0x017<<2	HDMIRX_TOP_EDID_RAM_ OVR1	RW	EDID RAM override byte1 address.
0x018<<2	HDMIRX_TOP_EDID_RAM_ OVR1_DATA	RW	EDID RAM override byte1 data.
0x019<<2	HDMIRX_TOP_EDID_RAM_ OVR2	RW	EDID RAM override byte2 address.
0x01A<<2	HDMIRX_TOP_EDID_RAM_ OVR2_DATA	RW	EDID RAM override byte2 data.
0x01B<<2	HDMIRX_TOP_EDID_RAM_ OVR3	RW	EDID RAM override byte3 address.
0x01C<<2	HDMIRX_TOP_EDID_RAM_ OVR3_DATA	RW	EDID RAM override byte3 data.
0x01D<<2	HDMIRX_TOP_EDID_RAM_ OVR4	RW	EDID RAM override byte4 address.

Amlogic Proprietary and Confidential
Copyright © Amlogic. All rights reserved.

Address	Register	RW	Function
0x01E<<2	HDMIRX_TOP_EDID_RAM_OVR4_DATA	RW	EDID RAM override byte4 data.
0x01F<<2	HDMIRX_TOP_EDID_RAM_OVR5	RW	EDID RAM override byte5 address.
0x020<<2	HDMIRX_TOP_EDID_RAM_OVR5_DATA	RW	EDID RAM override byte5 data.
0x021<<2	HDMIRX_TOP_EDID_RAM_OVR6	RW	EDID RAM override byte6 address.
0x022<<2	HDMIRX_TOP_EDID_RAM_OVR6_DATA	RW	EDID RAM override byte6 data.
0x023<<2	HDMIRX_TOP_EDID_RAM_OVR7	RW	EDID RAM override byte7 address.
0x024<<2	HDMIRX_TOP_EDID_RAM_OVR7_DATA	RW	EDID RAM override byte7 data.
0x025<<2	HDMIRX_TOP_EDID_GEN_STAT_B	RW	PortB EDID status.
0x026<<2	HDMIRX_TOP_EDID_GEN_STAT_C	RW	PortC EDID status.
0x028<<2	HDMIRX_TOP_CHAN_SWITCH_0	RW	Data channel input control.
0x02B<<2	HDMIRX_TOP_TMDS_ALIGN_STAT	R	Data channel alignment status.
0x02C<<2	HDMIRX_TOP_INFILTER_HDCP	RW	HDCP and SCDC input glitch filter control.
0x02D<<2	HDMIRX_TOP_INFILTER_I2C_0	RW	DDC SCL/SDA input glitch filter control for port 0.
0x02E<<2	HDMIRX_TOP_INFILTER_I2C_1	RW	DDC SCL/SDA input glitch filter control for port 1.
0x02F<<2	HDMIRX_TOP_INFILTER_I2C_2	RW	DDC SCL/SDA input glitch filter control for port 2.
0x033<<2	HDMIRX_TOP_PRBS_GEN	RW	PRBS generator control.
0x034<<2	HDMIRX_TOP_PRBS_ANA_0	RW	PRBS analyzer control.
0x035<<2	HDMIRX_TOP_PRBS_ANA_1	RW	PRBS analyzer control.
0x036<<2	HDMIRX_TOP_PRBS_ANA_STAT	R	PRBS analyzer status.
0x037<<2	HDMIRX_TOP_PRBS_ANA_BER_CH0	R	PRBS analyzer BER count for data channel 0.
0x038<<2	HDMIRX_TOP_PRBS_ANA_BER_CH1	R	PRBS analyzer BER count for data channel 1.
0x039<<2	HDMIRX_TOP_PRBS_ANA_BER_CH2	R	PRBS analyzer BER count for data channel 2.
0x03A<<2	HDMIRX_TOP_METER_CABLE_CNTL	RW	cable_clk meter control.
0x03B<<2	HDMIRX_TOP_METER_CABLE_STAT	R	cable_clk meter status.

Amlogic Proprietary and Confidential
Copyright © Amlogic. All rights reserved.

Address	Register	RW	Function
0x03C<<2	HDMIRX_TOP_CHAN_ SWITCH_1	RW	Data channel input control.
0x040<<2	HDMIRX_TOP_AUDPLL_ LOCK_FILTER	RW	Aud_pll lock input filter.
0x041<<2	HDMIRX_TOP_CHAN01_ ERRCNT	R	Character error counter for data channel 0 and 1.
0x042<<2	HDMIRX_TOP_CHAN2_ ERRCNT	R	Character error counter for data channel 2.
0x043<<2	HDMIRX_TOP_ACR_CNTL2	RW	ACR control.
0x044<<2	HDMIRX_TOP_ACR_N_STAT	R	Read back N value to AUD_PLL.
0x045<<2	HDMIRX_TOP_ACR_CTS_ STAT	R	Read back CTS value to AUD_PLL.
0x046<<2	HDMIRX_TOP_AUDMEAS_ CTRL	RW	Audio clock measure control.
0x047<<2	HDMIRX_TOP_AUDMEAS_ CYCLES_M1	RW	Audio clock measure period length.
0x048<<2	HDMIRX_TOP_AUDMEAS_ INTR_MASKN	RW	Audio clock measure interrupt mask.
0x049<<2	HDMIRX_TOP_AUDMEAS_ INTR_STAT	RW	Audio clock measure interrupt status.
0x04A<<2	HDMIRX_TOP_AUDMEAS_ REF_CYCLES_STAT0	R	Audio clock measure result.
0x04B<<2	HDMIRX_TOP_AUDMEAS_ REF_CYCLES_STAT1	R	Audio clock measure result.
0x050<<2	HDMIRX_TOP_SHIFT_PTTN_ 012	RW	Shift pattern BIST.
0x051<<2	HDMIRX_TOP_SHIFT_PTTN_ 345	RW	Shift pattern BIST.
0x052<<2	HDMIRX_TOP_SHIFT_PTTN_ 678	RW	Shift pattern BIST.
0x053<<2	HDMIRX_TOP_SHIFT_PTTN_ 9	RW	Shift pattern BIST.
0x054<<2	HDMIRX_TOP_SHFT_ANA_ CNTL	RW	Shift pattern BIST.
0x055<<2	HDMIRX_TOP_SHFT_ANA_ STAT	R	Shift pattern BIST.
0x056<<2	HDMIRX_TOP_SHFT_PTTN_ RCV_012	R	Shift pattern BIST.
0x057<<2	HDMIRX_TOP_SHFT_PTTN_ RCV_345	R	Shift pattern BIST.
0x058<<2	HDMIRX_TOP_SHFT_PTTN_ RCV_678	R	Shift pattern BIST.
0x059<<2	HDMIRX_TOP_SHFT_PTTN_ RCV_9	R	Shift pattern BIST.
0x06E<<2	HDMIRX_TOP_NSEC_ SCRATCH	RW	Scratch register for non-secure access.

Amlogic Proprietary and Confidential
Copyright © Amlogic. All rights reserved.

Address	Register	RW	Function
0x06F<<2	HDMIRX_TOP_SEC_ SCRATCH	RW	Scratch register for secure access.
0x070<<2	HDMIRX_TOP_EMP_DDR_ START_A	RW	DDR pointer A to store EMP.
0x071<<2	HDMIRX_TOP_EMP_DDR_ START_B	RW	DDR pointer B to store EMP.
0x072<<2	HDMIRX_TOP_EMP_DDR_ FILTER	RW	Packet filter to go to DDR.
0x073<<2	HDMIRX_TOP_EMP_CNTL_0	RW	EMP to DDR control.
0x074<<2	HDMIRX_TOP_EMP_CNTL_1	RW	EMP to DDR control.
0x075<<2	HDMIRX_TOP_EMP_ CNTMAX	RW	Maximum number of packets to store in DDR per frame.
0x076<<2	HDMIRX_TOP_EMP_ERR_ STAT	RW	EMP error status.
0x077<<2	HDMIRX_TOP_EMP_RCV_ CNT_CUR	R	Current number of packet received.
0x078<<2	HDMIRX_TOP_EMP_RCV_ CNT_BUF	R	Buffered number of packet received.
0x079<<2	HDMIRX_TOP_EMP_DDR_ ADDR_CUR	R	Current DDR pointer for EMP.
0x07A<<2	HDMIRX_TOP_EMP_DDR_ PTR_S_BUF	R	Buffered DDR pointer for EMP.
0x07B<<2	HDMIRX_TOP_EMP_STAT_0	R	EMP status.
0x07C<<2	HDMIRX_TOP_EMP_STAT_1	R	EMP status.
0x080<<2	HDMIRX_TOP_PHYIF_CNTL0	RW	MISC PHY signal control
0x081<<2	HDMIRX_TOP_FIX_DIS- ABLE_0	RW	Fix IP internal domain crossing bug.
0x084<<2	HDMIRX_TOP_MISC_STAT0	R	MISC status
0x090<<2	HDMIRX_TOP_OVID_ OVERRIDE0	RW	Override hdmirx video output.
0x091<<2	HDMIRX_TOP_OVID_ OVERRIDE1	RW	Override hdmirx video output.
0x0a0<<2	HDMIRX_TOP_SECURE_ INDEX	RW	Secure core register bank start index.
0x0a1<<2	HDMIRX_TOP_SECURE_ DATA	RW	Secure core register bank content.
0x0a2<<2	HDMIRX_TOP_SECURE_ MODE	RW	Control if core register can be accessed.
0x1000- 0x11ff	HDMIRX_TOP_EDID_ ADDR0_S- HDMIRX_TOP_EDID_ ADDR0_E	RW	For Host to program port0’s EDID RAM.

Amlogic Proprietary and Confidential
Copyright © Amlogic. All rights reserved.

Address	Register	RW	Function
0x1200-0x13ff	HDMIRX_TOP_EDID_ADDR1_S-HDMIRX_TOP_EDID_ADDR1_E	RW	For Host to program port1's EDID RAM.
0x1400-0x15ff	HDMIRX_TOP_EDID_ADDR2_S-HDMIRX_TOP_EDID_ADDR2_E	RW	For Host to program port2's EDID RAM.

Register Description

Table 10-10 HDMIRX_TOP_SW_RESET

Bit	R/W	Default	Description
31:16	R	0	Reserved
15	RW	1	sw_reset_audmeas: to reset audio clock measure module. 0=Release from reset; 1=Apply reset.
13	RW	1	sw_reset_emp: to reset EMP module. 0=Release from reset; 1=Apply reset.
11	RW	1	sw_reset_flt: to reset DDC input glitch filter. 0=Release from reset; 1=Apply reset.
8	RW	1	sw_reset_bist: to reset BIST module. 0=Release from reset; 1=Apply reset.
7	RW	1	sw_reset_chan: to reset channel_switch module. 0=Release from reset; 1=Apply reset.
6	RW	1	sw_reset_cable_meter: to reset cable_clk meter. 0=Release from reset; 1=Apply reset.
5	RW	1	sw_reset_hdmi_meter: to reset hdmi_clk meter. 0=Release from reset; 1=Apply reset.
4	RW	1	sw_reset_acr: to reset ACR module. 0=Release from reset; 1=Apply reset.
3	RW	1	sw_reset_vid: to reset video processing path. 0=Release from reset; 1=Apply reset.
2	RW	1	sw_reset_intr: to reset interrupt block. 0=Release from reset; 1=Apply reset.
1	RW	1	sw_reset_edid: to reset EDID interface. 0=Release from reset; 1=Apply reset.
0	RW	1	sw_reset_core: To reset RX Controller IP. 0=Release from reset; 1=Apply reset.

Amlogic Proprietary and Confidential
Copyright © Amlogic. All rights reserved.

Table 10-11 HDMIRX_TOP_CLK_CNTL

Bit	R/W	Default	Description
31	RW	0	free_clk_en: 0= Enable clock gating for power saving; 1= Disable clock gating, enable free-run clock.
30:18	R	0	Reserved
15	RW	0	hbr_spdif_en: 1= Select HBR audio through SPDIF not I2S.
14:13	RW	0	Reserved
8	RW	0	tmds_ch2_clk_inv: 1= Invert tmds_ch2_clk.
7	RW	0	tmds_ch1_clk_inv: 1= Invert tmds_ch1_clk.
6	RW	0	tmds_ch0_clk_inv: 1= Invert tmds_ch0_clk.
5	RW	0	pll4x_cfg
4	RW	0	force_pll4x: 1=Force pll4x_en value to be pll4x_cfg. 0=Use auto detect.
3	RW	0	phy_clk_inv: 1= Invert phy_clk.
2:0	R	0	Reserved

Table 10-12 HDMIRX_TOP_HPD_PWR5V

Bit	R/W	Default	Description
31:23	R	0	Reserved
22	R	0	stat_5v_portC: Status of 5v power for port C.
21	R	0	stat_5v_portB: Status of 5v power for port B.
20	R	0	stat_5v_portA: Status of 5v power for port A.
19	R	0	Reserved
18	R	0	stat_hpd_portC: Status of IP's own HPD value for port C.
17	R	0	stat_hpd_portB: Status of IP's own HPD value for port B.
16	R	0	stat_hpd_portA: Status of IP's own HPD value for port A.
15:6	R	0	Reserved
5	RW	0	invert_hpd: 1=Invert the HPD value before final output; 0=No invert.
4	RW	1	force_hpd: 1=Select hpd_config as HPD value; 0=Select IP's own value as HPD.

Amlogic Proprietary and Confidential
Copyright © Amlogic. All rights reserved.

Bit	R/W	Default	Description
3	R	0	Reserved
2:0	RW	0	hpd_config: HPD values when force_hpd=1, bit0 for port A, bit1 for port B, bit2 for port C.

Table 10-13 HDMIRX_TOP_PORT_SEL

Bit	R/W	Default	Description
31:5	R	0	Reserved
4	RW	0	multi_edid: 1=Enable all ports available for EDID transaction; 0=Only the selected port can do EDID.
2:0	RW	0	port_sel: HDMI port select for EDID. 0001=Select port A; 0010=Select port B; 0100=Select port C.

Table 10-14 HDMIRX_TOP_EDID_GEN_CNTL

Bit	R/W	Default	Description
31:16	RW	0	Reserved
15:13	RW	0	i2c_filter_enable[2:0]. One bit for each port. 1=Enable glitch filter on SCL and SDA; 0=No glitch filter, same as M6TV.
12	R	0	Reserved
11	RW	0	auto_cec_enable: Control whether to auto-replace the port-related CEC information within EDID info. 1=Auto-replace data byte with edid_byte0_cec_portA/B/C/D, if the byte's location matches edid_addr0_cec, and port matches A/B/C/D; and auto-replace data byte with edid_byte1_cec_portA/B/C/D, if the byte's location matches edid_addr1_cec, and port matches A/B/C/D; 0=Send EDID data exactly as filled in RAM.
10	RW	0	scl_stretch_trigger_config: 1=Manual trigger for clock stretch, applicable when force_scl_stretch_trigger=1. 0=No trigger.
9	RW	0	force_scl_stretch_trigger: Select the source to trigger start clock-stretch. 1=Manual trigger of scl_stretch_trigger_config=1; 0=Auto trigger on every 2 EDID blocks sent.
8	RW	0	scl_stretch_enable: 1=Enable I2C clock-stretch feature to suspend I2C when Host need time to fill new EDID data into RAM during I2C transaction; 0=Disable I2C clock-stretch feature.
7:0	RW	0	clk_divide_m1: Divide system clock down for EDID I/F clock, no need to divide down, but can divide down if for power saving purpose.

Amlogic Proprietary and Confidential
Copyright © Amlogic. All rights reserved.

Table 10-15 HDMIRX_TOP_EDID_ADDR_CEC

Bit	R/W	Default	Description
31:16	RW	0x99	edid_addr1_cec: byte1 address for auto-replacing EDID's CEC info.
15:0	RW	0x98	edid_addr0_cec: byte0 address for auto-replacing EDID's CEC info.

Table 10-16 HDMIRX_TOP_EDID_DATA_CEC_PORT01

Bit	R/W	Default	Description
31:24	RW	0	edid_byte1_cec_portB: byte1 data for auto-replacing EDID's CEC info.
23:16	RW	0	edid_byte0_cec_portB: byte0 data for auto-replacing EDID's CEC info.
15:8	RW	0	edid_byte1_cec_portA: byte1 data for auto-replacing EDID's CEC info.
7:0	RW	0	edid_byte0_cec_portA: byte0 data for auto-replacing EDID's CEC info.

Table 10-17 HDMIRX_TOP_EDID_DATA_CEC_PORT2

Bit	R/W	Default	Description
15:8	RW	0	edid_byte1_cec_portC: byte1 data for auto-replacing EDID's CEC info.
7:0	RW	0	edid_byte0_cec_portC: byte0 data for auto-replacing EDID's CEC info.

Table 10-18 HDMIRX_TOP_EDID_GEN_STAT_A

EDID status for portA.

Bit	R/W	Default	Description
31:25	R	0	Reserved
24:22	R	0	i2c_state: Status of I2C transaction. 0=IDLE; 1=SEND_BYTE; 2=GET_ACK; 3=READ_BYTE; 4=PUT_ACK.
21:20	R	0	slave_state: Status of I2C slave. 0=IDLE; 1=OFFSET, read offset address; 2=SEGMENT, read segment pointer; 3=SEND, sending data.
19:17	R	0	Reserved
16	RW	0	edid_addr_intr_stat_clr: This bit read back 1 after 2-block EDID data were sent, and there are further block to be sent. Write this bit 1 to clear this bit.
15:0	R	0	edid_addr: Status of current EDID address.

Amlogic Proprietary and Confidential
Copyright © Amlogic. All rights reserved.

Table 10-19 HDMIRX_TOP_INTR_MASKN

Interrupt MASKN, one bit per interrupt source. 0= Disable interrupt source; 1= Enable interrupt source.

Bit	R/W	Default	Description
31:30	R	0	Reserved
29	RW	0	hdmirx_sqofclk_fall
28	RW	0	hdmirx_sqofclk_rise
27	RW	0	de_rise_irq: DE rise edge.
26	RW	0	last_emp_done: For EMP-to-DDR mode, this bit means last EMP packet received; For TMDS-to-DDR mode, this bit means last TMDS character received.
25	RW	0	emp_field_done: EMP receive done for last field. Note: EMP field end at DE rise.
24	RW	0	Reserved
23	RW	0	meter_stable_chg_cable: cable_clk measure stable/unstable status change
22:20	RW	0	Reserved
19	RW	0	edid_addr_intr for the port C
18	RW	0	edid_addr_intr for the port B
17	RW	0	edid_addr_intr for the port A
16	RW	0	hdcp_enc_state_fall
15	RW	0	hdcp_enc_state_rise
14	RW	0	hdcp_auth_start_fall
13	RW	0	hdcp_auth_start_rise
12	RW	0	meter_stable_chg_hdmi: tmds_clk measure stable/unstable status change
11	RW	0	vid_colour_depth_chg: video data color_depth change
10	RW	0	vid_fmt_chg: video data format change
9	RW	0	Reserved
8	RW	0	Port C 5v fall
7	RW	0	Port B 5v fall
6	RW	0	Port A 5v fall
5	RW	0	Port C 5v rise
4	RW	0	Port B 5v rise
3	RW	0	Port A 5v rise
2	RW	0	RX PHY digital interrupt.
1	RW	0	RX Controller pwd interrupt.
0	RW	0	RX Controller aon interrupt.

Amlogic Proprietary and Confidential
Copyright © Amlogic. All rights reserved.

Table 10-20 HDMIRX_TOP_INTR_STAT

Interrupt status. For each bit of bit[29:3], write 1 to manually set the interrupt bit, read back the interrupt status.

Bit	R/W	Default	Description
31:30	RW	0	Reserved
29	RW	0	hdmirx_sqofclk_fall
28	RW	0	hdmirx_sqofclk_rise
27	RW	0	de_rise_irq: DE rise edge.
26	RW	0	last_emp_done: For EMP-to-DDR mode, this bit means last EMP packet received; For TMDS-to-DDR mode, this bit means last TMDS character received.
25	RW	0	emp_field_done: EMP receive done for last field. Note: EMP field end at DE rise.
24	RW	0	Reserved
23	RW	0	meter_stable_chg_cable: cable_clk measure stable/unstable status change
22:20	RW	0	Reserved
19	RW	0	edid_addr_intr for the port C
18	RW	0	edid_addr_intr for the port B
17	RW	0	edid_addr_intr for the port A
16	RW	0	hdcp_enc_state_fall
15	RW	0	hdcp_enc_state_rise
14	RW	0	hdcp_auth_start_fall
13	RW	0	hdcp_auth_start_rise
12	RW	0	meter_stable_chg_hdmi: tmds_clk measure stable/unstable status change
11	RW	0	vid_colour_depth_chg: video data color_depth change
10	RW	0	vid_fmt_chg: video data format change
9	RW	0	Reserved
8	RW	0	Port C 5v fall
7	RW	0	Port B 5v fall
6	RW	0	Port A 5v fall
5	RW	0	Port C 5v rise
4	RW	0	Port B 5v rise
3	RW	0	Port A 5v rise
2	RW	0	RX PHY digital interrupt.
1	RW	0	RX Controller pwd interrupt.
0	RW	0	RX Controller aon interrupt.

Table 10-21 HDMIRX_TOP_INTR_STAT_CLR

Interrupt status clear. For each bit[29:3], write 1 to clear the interrupt bit.

Amlogic Proprietary and Confidential
Copyright © Amlogic. All rights reserved.

Bit	R/W	Default	Description
31:30	R	0	Reserved
29	W	0	hdmirx_sqofclk_fall
28	W	0	hdmirx_sqofclk_rise
27	W	0	de_rise_irq: DE rise edge.
26	W	0	last_emp_done: For EMP-to-DDR mode, this bit means last EMP packet received; For TMDS-to-DDR mode, this bit means last TMDS character received.
25	W	0	emp_field_done: EMP receive done for last field. Note: EMP field end at DE rise.
24	W	0	Reserved
23	W	0	meter_stable_chg_cable: cable_clk measure stable/unstable status change
22:20	W	0	Reserved
19	W	0	edid_addr_intr for the port C
18	W	0	edid_addr_intr for the port B
17	W	0	edid_addr_intr for the port A
16	W	0	hdcp_enc_state_fall
15	W	0	hdcp_enc_state_rise
14	W	0	hdcp_auth_start_fall
13	W	0	hdcp_auth_start_rise
12	W	0	meter_stable_chg_hdmi: tmds_clk measure stable/unstable status change
11	W	0	vid_colour_depth_chg: video data color_depth change
10	W	0	vid_fmt_chg: video data format change
9	W	0	Reserved
8	W	0	Port C 5v fall
7	W	0	Port B 5v fall
6	W	0	Port A 5v fall
5	W	0	Port C 5v rise
4	W	0	Port B 5v rise
3	W	0	Port A 5v rise
2		0	RX PHY digital interrupt.
1		0	RX Controller pwd interrupt.
0		0	RX Controller aon interrupt.

Table 10-22 HDMIRX_TOP_VID_CNTL

Bit	R/W	Default	Description
31:29	RW	0	Reserved
28	RW	0	vs_timing: 0=input VS rising edge to generate output VS pulse; 1=input VS falling edge to generate output VS pulse.

Amlogic Proprietary and Confidential
Copyright © Amlogic. All rights reserved.

Bit	R/W	Default	Description
27	RW	0	hs_timing: 0=input HS rising edge to generate output HS pulse; 1=input HS falling edge to generate output HS pulse.
26:24	RW	0	data_map: Re-map component data to different position. 0={vid2, vid1, vid0} 1={vid1, vid2, vid0} 2={vid1, vid0, vid2} 3={vid0, vid1, vid2} 4={vid0, vid2, vid1} 5={vid2, vid0, vid1}
23:20	RW	0	Reserved
19	RW	0	mode_422: 1=Average neighbor pixels to interpolate to 444; 0=Repeat previous pixel to interpolate to 444.
18	RW	0	Reserved
17	RW	0	dbv422_mode: 1=For DolbyVision 422 mode, pass through data to downstream video path without converting to 444.
11	RW	0	vid_fmt_override. 0=Use automatic detected vid_fmt; 1=Use vid_fmt_val.
10:8	RW	0	vid_fmt_val. 0=RGB; 1=YUV422; 2=YUV444; 3=YUV420.
7	RW	0	pixel_repeat_override. Always set to 0. 0=Use automatic detected pixel_repeat; 1=Use pixel_repeat_cfg.
6:3	RW	0	pixel_repeat_cfg
2	RW	0	color_depth_override. 0=Use automatic detected color_depth; 1=Use color_depth_cfg.
1:0	RW	0	color_depth_cfg. 0=8-bit; 1=10-bit; 2=12-bit; 3=16-bit.

Table 10-23 HDMIRX_TOP_VID_STAT

Bit	R/W	Default	Description
31:24	R	0	Reserved
23:20	R	0	vid_fmt: input video data format. 0=RGB; 1=YUV422; 2=YUV444; 3=YUV420.

Amlogic Proprietary and Confidential
Copyright © Amlogic. All rights reserved.

Bit	R/W	Default	Description
19:16	R	0	vid_colour_depth: input video data color_depth. 0-3=Reserved; 4=24-bit per pixel; 5=30-bit; 6=36-bit; 7=48-bit; 8-15=Reserved.
15:0	R	0	window_start_pix: Applicable to 420 mode only. The measure input data line's position from HS rise to DE rise, minus cntl_ last420l_rdwin_auto.

Table 10-24 HDMIRX_TOP_ACR_CNTL_STAT

Bit	R/W	Default	Description
28:27	R	0	Reserved
15:13	RW	0	n_cts_update_width: 000=hdmirx_n_cts_update pulse width is 1 tmds_clk cycle; 001=2-cycle; 011=3-cycle; 111=4-cycle.
12	RW	0	n_cts_update_on_pll4x: 1=aud_pll4x_en change will result in a hdmirx_n_cts_update pulse; 0=No hdmirx_n_cts_update pulse on aud_pll4x_en change.
11	RW	0	n_cts_update_man: Write 1 to manually generate an hdmirx_n_cts_update pulse. This bit self-clears.
10	RW	0	pll_tmode_cntl: Set to 1 for production testing audio ACR PLL. Normal working mode set to 0.

Table 10-25 HDMIRX_TOP_METER_HDMI_CNTL

Bit	R/W	Default	Description
31:28	RW	0x1	meas_tolerance
27:24	RW	0	Reserved
23:0	RW	0x80	ref_cycles

Table 10-26 HDMIRX_TOP_METER_HDMI_STAT

Bit	R/W	Default	Description
31	R	0	meas_stable
30:24	R	0	Reserved
23:0	R	0	meas_cycles. Freq(tmds_clk)=Freq(ref_clk)*meas_cycles/ref_cycles

Amlogic Proprietary and Confidential
Copyright © Amlogic. All rights reserved.

Table 10-27 HDMIRX_TOP_VID_CNTL2

Bit	R/W	Default	Description
31:21	RW	0	Reserved
20	RW	0	last420l_rdwin_mode: Control when to start read from FIFO for outputting 420 even or last line. 0=End Of Active Video by detecting no DE cntl_last420l_rdwin_auto + window_ start_pix clock cycles after go_line. 1=End of Active Video after cntl_last420l_rdwin_manual active line passed.
19:8	RW	0	last420l_rdwin_manual
7:0	RW	0xa	last420l_rdwin_auto

Table 10-28 HDMIRX_TOP_EDID_RAM_OVR0

Bit	R/W	Default	Description
31:19	R	0	Reserved
18:16	RW	0	edid_ram_ovr0_en: For each bit, 1=Enable override the data read from EDID RAM address edid_ram_ovr0_addr, with the data defined in HDMIRX_EDID_RAM_OVR0_DATA. Bit[0] for portA, bit[1] for portB, bit[2] for portC.
15:0	RW	0	edid_ram_ovr0_addr

Table 10-29 HDMIRX_TOP_EDID_RAM_OVR0_DATA

Bit	R/W	Default	Description
23:16	RW	0	edid_ram_ovr0_data for portC
15:8	RW	0	edid_ram_ovr0_data for portB
7:0	RW	0	edid_ram_ovr0_data for portA

Table 10-30 HDMIRX_TOP_EDID_RAM_OVR1

Bit	R/W	Default	Description
31:19	R	0	Reserved
18:16	RW	0	edid_ram_ovr1_en: For each bit, 1=Enable override the data read from EDID RAM address edid_ram_ovr1_addr, with the data defined in HDMIRX_EDID_RAM_OVR1_DATA. Bit[0] for portA, bit[1] for portB, bit[2] for portC.
15:0	RW	0	edid_ram_ovr1_addr

Table 10-31 HDMIRX_TOP_EDID_RAM_OVR1_DATA

Bit	R/W	Default	Description
23:16	RW	0	edid_ram_ovr1_data for portC
15:8	RW	0	edid_ram_ovr1_data for portB
7:0	RW	0	edid_ram_ovr1_data for portA

Amlogic Proprietary and Confidential
Copyright © Amlogic. All rights reserved.

Table 10-32 HDMIRX_TOP_EDID_RAM_OVR2

Bit	R/W	Default	Description
31:19	R	0	Reserved
18:16	RW	0	edid_ram_ovr2_en: For each bit, 1=Enable override the data read from EDID RAM address edid_ram_ovr2_addr, with the data defined in HDMIRX_EDID_RAM_OVR2_DATA. Bit[0] for portA, bit[1] for portB, bit[2] for portC.
15:0	RW	0	edid_ram_ovr2_addr

Table 10-33 HDMIRX_TOP_EDID_RAM_OVR2_DATA

Bit	R/W	Default	Description
23:16	RW	0	edid_ram_ovr2_data for portC
15:8	RW	0	edid_ram_ovr2_data for portB
7:0	RW	0	edid_ram_ovr2_data for portA

Table 10-34 HDMIRX_TOP_EDID_RAM_OVR3

Bit	R/W	Default	Description
31:19	R	0	Reserved
18:16	RW	0	edid_ram_ovr3_en: For each bit, 1=Enable override the data read from EDID RAM address edid_ram_ovr3_addr, with the data defined in HDMIRX_EDID_RAM_OVR3_DATA. Bit[0] for portA, bit[1] for portB, bit[2] for portC.
15:0	RW	0	edid_ram_ovr3_addr

Table 10-35 HDMIRX_TOP_EDID_RAM_OVR3_DATA

Bit	R/W	Default	Description
23:16	RW	0	edid_ram_ovr3_data for portC
15:8	RW	0	edid_ram_ovr3_data for portB
7:0	RW	0	edid_ram_ovr3_data for portA

Table 10-36 HDMIRX_TOP_EDID_RAM_OVR4

Bit	R/W	Default	Description
31:19	R	0	Reserved
18:16	RW	0	edid_ram_ovr4_en: For each bit, 1=Enable override the data read from EDID RAM address edid_ram_ovr4_addr, with the data defined in HDMIRX_EDID_RAM_OVR4_DATA. Bit[0] for portA, bit[1] for portB, bit[2] for portC.
15:0	RW	0	edid_ram_ovr4_addr

Amlogic Proprietary and Confidential
Copyright © Amlogic. All rights reserved.

Table 10-37 HDMIRX_TOP_EDID_RAM_OVR4_DATA

Bit	R/W	Default	Description
23:16	RW	0	edid_ram_ovr4_data for portC
15:8	RW	0	edid_ram_ovr4_data for portB
7:0	RW	0	edid_ram_ovr4_data for portA

Table 10-38 HDMIRX_TOP_EDID_RAM_OVR5

Bit	R/W	Default	Description
31:19	R	0	Reserved
18:16	RW	0	edid_ram_ovr5_en: For each bit, 1=Enable override the data read from EDID RAM address edid_ram_ovr5_addr, with the data defined in HDMIRX_EDID_RAM_OVR5_DATA. Bit[0] for portA, bit[1] for portB, bit[2] for portC.
15:0	RW	0	edid_ram_ovr5_addr

Table 10-39 HDMIRX_TOP_EDID_RAM_OVR5_DATA

Bit	R/W	Default	Description
23:16	RW	0	edid_ram_ovr5_data for portC
15:8	RW	0	edid_ram_ovr5_data for portB
7:0	RW	0	edid_ram_ovr5_data for portA

Table 10-40 HDMIRX_TOP_EDID_RAM_OVR6

Bit	R/W	Default	Description
31:19	R	0	Reserved
18:16	RW	0	edid_ram_ovr6_en: For each bit, 1=Enable override the data read from EDID RAM address edid_ram_ovr6_addr, with the data defined in HDMIRX_EDID_RAM_OVR6_DATA. Bit[0] for portA, bit[1] for portB, bit[2] for portC.
15:0	RW	0	edid_ram_ovr6_addr

Table 10-41 HDMIRX_TOP_EDID_RAM_OVR6_DATA

Bit	R/W	Default	Description
23:16	RW	0	edid_ram_ovr6_data for portC
15:8	RW	0	edid_ram_ovr6_data for portB
7:0	RW	0	edid_ram_ovr6_data for portA

Amlogic Proprietary and Confidential
Copyright © Amlogic. All rights reserved.

Table 10-42 HDMIRX_TOP_EDID_RAM_OVR7

Bit	R/W	Default	Description
31:19	R	0	Reserved
18:16	RW	0	edid_ram_ovr7_en: For each bit, 1=Enable override the data read from EDID RAM address edid_ram_ovr7_addr, with the data defined in HDMIRX_EDID_RAM_OVR7_DATA. Bit[0] for portA, bit[1] for portB, bit[2] for portC.
15:0	RW	0	edid_ram_ovr7_addr

Table 10-43 HDMIRX_TOP_EDID_RAM_OVR7_DATA

Bit	R/W	Default	Description
23:16	RW	0	edid_ram_ovr7_data for portC
15:8	RW	0	edid_ram_ovr7_data for portB
7:0	RW	0	edid_ram_ovr7_data for portA

Table 10-44 HDMIRX_TOP_EDID_GEN_STAT_B

EDID status for portB.

Bit	R/W	Default	Description
31:25	R	0	Reserved
24:22	R	0	i2c_state: Status of I2C transaction. 0=IDLE; 1=SEND_BYTE; 2=GET_ACK; 3=READ_BYTE; 4=PUT_ACK.
21:20	R	0	slave_state: Status of I2C slave. 0=IDLE; 1=OFFSET, read offset address; 2=SEGMENT, read segment pointer; 3=SEND, sending data.
19:17	R	0	Reserved
16	RW	0	edid_addr_intr_stat_clr: This bit read back 1 after 2-block EDID data were sent, and there are further block to be sent. Write this bit 1 to clear this bit.
15:0	R	0	edid_addr: Status of current EDID address.

Table 10-45 HDMIRX_TOP_EDID_GEN_STAT_C

EDID status for portC.

Bit	R/W	Default	Description
31:25	R	0	Reserved
24:22	R	0	i2c_state: Status of I2C transaction. 0=IDLE; 1=SEND_BYTE; 2=GET_ACK;

Amlogic Proprietary and Confidential
Copyright © Amlogic. All rights reserved.

Bit	R/W	Default	Description
			3=READ_BYTE; 4=PUT_ACK.
21:20	R	0	slave_state: Status of I2C slave. 0=IDLE; 1=OFFSET, read offset address; 2=SEGMENT, read segment pointer; 3=SEND, sending data.
19:17	R	0	Reserved
16	RW	0	edid_addr_intr_stat_clr: This bit read back 1 after 2-block EDID data were sent, and there are further block to be sent. Write this bit 1 to clear this bit.
15:0	R	0	edid_addr: Status of current EDID address.

Table 10-46 HDMIRX_TOP_CHAN_SWITCH_0

Bit	R/W	Default	Description
29:28	RW	0	source_chan2: 0=select chan0 input; 1=select chan1 input; 2=select chan2 input.
27:26	RW	0	source_chan1: 0=select chan0 input; 1=select chan1 input; 2=select chan2 input.
25:24	RW	0	source_chan0: 0=select chan0 input; 1=select chan1 input; 2=select chan2 input.
22:20	RW	0	skew_chan2: 0=Delay data by 1 clock cycle; 1=Delay by 2 cycles; ...; 7=Delay by 8.
18:16	RW	0	skew_chan1: 0=Delay data by 1 clock cycle; 1=Delay by 2 cycles; ...; 7=Delay by 8.
14:12	RW	0	skew_chan0: 0=Delay data by 1 clock cycle; 1=Delay by 2 cycles; ...; 7=Delay by 8.
10	RW	0	bitswap_chan2: 1=Reverse input data endian.
9	RW	0	bitswap_chan1: 1=Reverse input data endian.
8	RW	0	bitswap_chan0: 1=Reverse input data endian.
6	RW	0	polarity_chan2: 1=Invert input data polarity.
5	RW	0	polarity_chan1: 1=Invert input data polarity.
4	RW	0	polarity_chan0: 1=Invert input data polarity.

Amlogic Proprietary and Confidential
Copyright © Amlogic. All rights reserved.

Bit	R/W	Default	Description
3	RW	0	charswap_2: 1=Swap the 10-bit word position within the 20-bit.
2	RW	0	charswap_1: 1=Swap the 10-bit word position within the 20-bit.
1	RW	0	charswap_0: 1=Swap the 10-bit word position within the 20-bit.
0	RW	0	enable: 1=enable data channels.

Table 10-47 HDMIRX_TOP_TMDS_ALIGN_STAT

Bit	R/W	Default	Description
0	R	0	tmds_align_status 0=Not aligned; 1=aligned.

Table 10-48 HDMIRX_TOP_INFILTER_HDCP

Bit	R/W	Default	Description
31:29	RW	0	For HDCP/SCDC SDA infilter: filter internal clock divider. Refer to SCL infilter.
28:16	RW	0	For HDCP/SCDC SDA infilter: sampling clock divider. Refer to SCL infilter.
15: 13	RW	0	For HDCP/SCDC SCL infilter: filter internal clock divider. 0=No divide; 1=Divide by 2; 2=Divide by 3; … 7=Divide by 8.
12:0	RW	0	For HDCP/SCDC SCL infilter: sampling clock divider. 0=No divide; 1=Divide the filter sampling clock by 2; 2=Divide the filter sampling clock by 3; … 8191=Divide the filter sampling clock by 8192;

Table 10-49 HDMIRX_TOP_INFILTER_I2C_0/1/2

Bit	R/W	Default	Description
31:29	RW	0	For EDID SDA infilter: filter internal clock divider. Refer to HDCP infilter.
28:16	RW	0	For EDID SDA infilter: sampling clock divider. Refer to HDCP infilter.
15: 13	RW	0	For EDID SCL infilter: filter internal clock divider. Refer to HDCP infilter.
12:0	RW	0	For EDID SCL infilter: sampling clock divider. Refer to HDCP infilter.

Amlogic Proprietary and Confidential
Copyright © Amlogic. All rights reserved.

Table 10-50 HDMIRX_TOP_PRBS_GEN

Bit	R/W	Default	Description
13:10	RW	0	pattern_max: maximum pattern words. 0=Use pattern word 0 only; 1=Use pattern word 0~1; 2=Use pattern word 0~2; … 9=Use pattern 0~9. 10~15=Reserved.
9	RW	0	shift_pattern_gen_enable: 0=Disable shift pattern generator; 1=Enable shift pattern generator.
8	RW	0	bist_loopback: 0=Loopback PRBS data to PHY; 1=Loopback original PHY data to PHY.
7:5	RW	3	decoup_thresh_prbs: Read start threshold for decouple RIFO at PRBS generator.
4:3	RW	0	prbs_mode: 0=PRBS11; 1=PRBS15; 2=PRBS7; 3=PRBS31.
2:1	RW	0	prbs_width: 0=output 0; 1=output 8-bit pattern; 2=output 1-bit pattern; 3=output 10-bit pattern.
0	RW	0	prbs_enable

Table 10-51 HDMIRX_TOP_PRBS_ANA_0

Bit	R/W	Default	Description
23:22	RW	0	chan2_prbs_mode: 0=PRBS11; 1=PRBS15; 2=PRBS7; 3=PRBS31.
21:20	RW	0	chan2_prbs_width: 0=idle; 1=8-bit pattern; 2=reserved; 3=10-bit pattern.
19	RW	0	chan2_clr_BER: 1=Clear BER result.
18	RW	0	chan2_freeze_BER. 1:Freeze BER result so it can be sample.
17	RW	0	chan2_inverse: 1=Reverse bit order/endian.
15:14	RW	0	chan1_prbs_mode: 0=PRBS11; 1=PRBS15; 2=PRBS7; 3=PRBS31.
13:12	RW	0	chan1_prbs_width: 0=idle; 1=8-bit pattern; 2=reserved; 3=10-bit pattern.
11	RW	0	chan1_clr_BER: 1=Clear BER result.
10	RW	0	chan1_freeze_BER. 1:Freeze BER result so it can be sample.
9	RW	0	chan1_inverse: 1=Reverse bit order/endian.
7:6	RW	0	chan0_prbs_mode: 0=PRBS11; 1=PRBS15; 2=PRBS7; 3=PRBS31.
5:4	RW	0	chan0_prbs_width: 0=idle; 1=8-bit pattern; 2=reserved; 3=10-bit pattern.
3	RW	0	chan0_clr_BER: 1=Clear BER result.

Amlogic Proprietary and Confidential
Copyright © Amlogic. All rights reserved.

Bit	R/W	Default	Description
2	RW	0	chan0_freeze_BER. 1:Freeze BER result so it can be sample.
1	RW	0	chan0_inverse: 1=Reverse bit order/endian.

Table 10-52 HDMIRX_TOP_PRBS_ANA_1

Bit	R/W	Default	Description
19:8	RW	0	time_window: Define the number of clocks after which the lock signal goes high if error number is smaller than error_threshold.
7:0	RW	0	err_threshold: Allowed number of errors.

Table 10-53 HDMIRX_TOP_PRBS_ANA_STAT

Bit	R/W	Default	Description
5	R	0	chan2_pattern_not_ok
4	R	0	chan2_lock
3	R	0	chan1_pattern_not_ok
2	R	0	chan1_lock
1	R	0	chan0_pattern_not_ok
0	R	0	chan0_lock

Table 10-54 HDMIRX_TOP_PRBS_ANA_BER_CH0

Bit	R/W	Default	Description
19:0	R	0	chan0_BER_result

Table 10-55 HDMIRX_TOP_PRBS_ANA_BER_CH1

Bit	R/W	Default	Description
19:0	R	0	chan1_BER_result

Table 10-56 HDMIRX_TOP_PRBS_ANA_BER_CH2

Bit	R/W	Default	Description
19:0	R	0	chan2_BER_result

Amlogic Proprietary and Confidential
Copyright © Amlogic. All rights reserved.

Table 10-57 HDMIRX_TOP_METER_CABLE_CNTL

Bit	R/W	Default	Description
31:28	RW	0x1	meas_tolerance: If difference between the consecutive measure results is greater than meas_tolerance, then stat_meas_stable=0; Otherwise stat_meas_stable=1.
23:0	RW	0x80	ref_cycles: Number of meter_clk cycles as one measure duration.

Table 10-58 HDMIRX_TOP_METER_CABLE_STAT

Bit	R/W	Default	Description
31	R	0	meas_stable: 1=If difference between the consecutive measure results is greater than meas_tolerance.
23:0	R	0	meas_cycles: Number of cable_clk cycles counted during one measure duration. Freq(cable_clk)=Freq(ref_clk)*meas_cycles/ref_cycles

Table 10-59 HDMIRX_TOP_CHAN_SWITCH_1

Bit	R/W	Default	Description
4	RW	0	valid_always: 0=use tmdsvalid signal from FIFO to gate data receiving; 1=Regardless tmdsvalid signal level, always receive data form PHY.
3:0	RW	7	decoup_thresh_chan: Read start threshold for decouple FIFO at channel input.

Table 10-60 HDMIRX_TOP_AUDPLL_LOCK_FILTER

Bit	R/W	Default	Description
7:0	RW	0	audpll_lock_filter value N: filter out glitch <= N

Table 10-61 HDMIRX_TOP_CHAN01_ERRCNT

Bit	R/W	Default	Description
30:16	R	0	erdet_ch1: shadow IP's periodical error counter for channel 1.
14:0	R	0	erdet_ch0: shadow IP's periodical error counter for channel 0.

Table 10-62 HDMIRX_TOP_CHAN2_ERRCNT

Bit	R/W	Default	Description
14:0	R	0	erdet_ch0: shadow IP's periodical error counter for channel 2.

Amlogic Proprietary and Confidential
Copyright © Amlogic. All rights reserved.

Table 10-63 HDMIRX_TOP_ACR_CNTL2

Bit	R/W	Default	Description
31:5	R	0	Reserved
4	RW	0	n_cts_auto_mode: 0=Auto update on every ACR packet, regardless N&CTS value change or not; 1=Auto update on ACR packet's N or CTS value change, so may not update on every ACR.
3	RW	0	n_cts_update_inv: 1=Invert hdmirx_n_cts_update output polarity.
2:0	RW	0	n_cts_update_del: 0=hdmirx_n_cts_update pulse is aligned with N&CTS value change; 1=hdmirx_n_cts_update pulse is 1 cycle behind N&CTS value change; ... 7=hdmirx_n_cts_update pulse is 7 cycle behind N&CTS value change.

Table 10-64 HDMIRX_TOP_ACR_N_STAT

Bit	R/W	Default	Description
19:0	R	0	Records N value to AUD_PLL.

Table 10-65 HDMIRX_TOP_ACR_CTS_STAT

Bit	R/W	Default	Description
19:0	R	0	Records CTS value to AUD_PLL.

Table 10-66 HDMIRX_TOP_AUDMEAS_CTRL

Bit	R/W	Default	Description
31:16	RW	0	meas_tolerance. Clk is considered stable, if the difference between two consecutive measurements is less than meas_tolerance. Applicable meas_mode=0, periodic measure.
2	RW	0	meas_mode. 0=Periodic measure; 1=Accumulate time stamp.
1	RW	0	enable. 0=Disable; 1=Enable.
0	RW	0	sw_reset. 0=No reset; 1=Reset.

Table 10-67 HDMIRX_TOP_AUDMEAS_CYCLES_M1

Bit	R/W	Default	Description
31:0	RW	0	Set (meas_clk_cycles_m1+1) of meas_clk cycles as one measure period, to count the number of ref_clk cycles.

Amlogic Proprietary and Confidential
Copyright © Amlogic. All rights reserved.

Table 10-68 HDMIRX_TOP_AUDMEAS_INTR_MASKN

Bit	R/W	Default	Description
3:0	RW	0	Interrupt src mask, one bit per interrupt src. 0=disable the src to interrupt; 1=enable the src to interrupt. Bit[3]: meas_stable fall Bit[2]: meas_stable rise Bit[1]: ref_counter overflow Bit[0]: one measure period completes

Table 10-69 HDMIRX_TOP_AUDMEAS_INTR_STAT

Bit	R/W	Default	Description
3:0	RW	0	Read back interrupt status, one bit per interrupt src. For each bit, write 1to clear the interrupt. Bit[3]: meas_stable fall Bit[2]: meas_stable rise Bit[1]: ref_counter overflow Bit[0]: one measure period completes

Table 10-70 HDMIRX_TOP_AUDMEAS_REF_CYCLES_STAT0

Bit	R/W	Default	Description
31:0	R	0	ref_clk_cycles_m1[31:0]. ref_clk_cycles_m1[47:0]+1 is the number of ref_clk cycles during one measure period (meas_mode=0), or during N measure period (meas_mode=1).

Table 10-71 HDMIRX_TOP_AUDMEAS_REF_CYCLES_STAT1

Bit	R/W	Default	Description
17	R	0	meas_stable. 1=meas_clk is stable; 0=not stable. Applicable only to meas_mode=0.
16	R	0	ref_clk_cycles_ovl. 1=ref_clk_cycles_m1 wrapped over.
15:0	R	0	ref_clk_cycles_m1[47:32].

Table 10-72 HDMIRX_TOP_SHIFT_PTTN_012

Bit	R/W	Default	Description
29:20	RW	0	Shift pattern word 2.
19:10	RW	0	Shift pattern word 1.
9:0	RW	0	Shift pattern word 0.

Table 10-73 HDMIRX_TOP_SHIFT_PTTN_345

Bit	R/W	Default	Description
29:20	RW	0	Shift pattern word 5.
19:10	RW	0	Shift pattern word 4.
9:0	RW	0	Shift pattern word 3.

Amlogic Proprietary and Confidential
Copyright © Amlogic. All rights reserved.

Table 10-74 HDMIRX_TOP_SHIFT_PTTN_678

Bit	R/W	Default	Description
29:20	RW	0	Shift pattern word 8.
19:10	RW	0	Shift pattern word 7.
9:0	RW	0	Shift pattern word 6.

Table 10-75 HDMIRX_TOP_SHIFT_PTTN_9

Bit	R/W	Default	Description
9:0	RW	0	Shift pattern word 9.

Table 10-76 HDMIRX_TOP_SHFT_ANA_CNTL

Bit	R/W	Default	Description
15:4	RW	0	time_window: Defines the number of cycles of error-free before the lock signal goes high.
3	RW	0	snapshot_in. 1=Take a snapshot of received pattern, that can be read back through HDMIRX_TOP_SHFT_PTTN_RCV_***.
2	RW	0	freeze_ber. 1=Freeze the data into ber_meter register so it can be read.
1	RW	0	shift_pattern_clr_ber_meter. 1=Clear BER counter.
0	RW	0	shift_pattern_ana_enable. 0=Disable shift pattern analyzer; 1=Enable shift pattern analyzer.

Table 10-77 HDMIRX_TOP_SHFT_ANA_STAT

Bit	R/W	Default	Description
23:4	R	0	stat_shft_ana_ber: BER meter counter output. Buffered by freeze_ber, so safe for reg read.
1	R	0	shift_ana_pattern_Nok: Status of the current comparison, valid after shift_ana_pattern_lock =1. 0=Received pattern match; 1=Received pattern NOT match
0	R	0	shift_ana_pattern_lock: Sticky signal, =1 after the received pattern has matched for at least for time_window cycles.

Table 10-78 HDMIRX_TOP_SHFT_PTTN_RCV_012

Bit	R/W	Default	Description
29:20	R	0	Received shift pattern word 2. (After taking a snapshot, and maybe bit-shifted.)
19:10	R	0	Received shift pattern word 1. (After taking a snapshot, and maybe bit-shifted.)
9:0	R	0	Received shift pattern word 0. (After taking a snapshot, and maybe bit-shifted.)

Amlogic Proprietary and Confidential
Copyright © Amlogic. All rights reserved.

Table 10-79 HDMIRX_TOP_SHFT_PTTN_RCV_345

Bit	R/W	Default	Description
29:20	R	0	Received shift pattern word 5. (After taking a snapshot, and maybe bit-shifted.)
19:10	R	0	Received shift pattern word 4. (After taking a snapshot, and maybe bit-shifted.)
9:0	R	0	Received shift pattern word 3. (After taking a snapshot, and maybe bit-shifted.)

Table 10-80 HDMIRX_TOP_SHFT_PTTN_RCV_678

Bit	R/W	Default	Description
29:20	R	0	Received shift pattern word 8. (After taking a snapshot, and maybe bit-shifted.)
19:10	R	0	Received shift pattern word 7. (After taking a snapshot, and maybe bit-shifted.)
9:0	R	0	Received shift pattern word 6. (After taking a snapshot, and maybe bit-shifted.)

Table 10-81 HDMIRX_TOP_SHFT_PTTN_RCV_9

Bit	R/W	Default	Description
9:0	R	0	Received shift pattern word 9. (After taking a snapshot, and maybe bit-shifted.)

Table 10-82 HDMIRX_TOP_NSEC_SCRATCH

Bit	R/W	Default	Description
31:0	RW	0	Scratch register that can be used for either secure or non-secure reg access.

Table 10-83 HDMIRX_TOP_SEC_SCRATCH

Bit	R/W	Default	Description
31:0	RW	0	Scratch register that can be used for secure reg access only.

Table 10-84 HDMIRX_TOP_EMP_DDR_START_A

Bit	R/W	Default	Description
31:0	RW	0	DDR pointer A[33:2] for storing EMP packets or TMDS. 16-byte aligned, so low 2-bit is ignored. For EMP-to-DDR, the pointer is alternated between A and B, frame by frame. For TMDS-to-DDR, the pointer is fixed at A.

Table 10-85 HDMIRX_TOP_EMP_DDR_START_B

Bit	R/W	Default	Description
31:0	RW	0	DDR pointer B[33:2] for storing EMP packets. 16-byte aligned, so low 2-bit is ignored. For EMP-to-DDR, the pointer is alternated between A and B, frame by frame. Not applicable for TMDS-to-DDR.

Amlogic Proprietary and Confidential
Copyright © Amlogic. All rights reserved.

Table 10-86 HDMIRX_TOP_EMP_DDR_FILTER

Applicable only to EMP-to-DDR mode.

Bit	R/W	Default	Description
24	RW	0	ddr_store_other. 1=Enable store other packets that is neither NULL nor any that has already been described in bit[22:0].
23	RW	0	Reserved.
22	RW	0	ddr_store_drm. 1=Enable store Dynamic Range and Mastering InfoFrame.
21	RW	0	ddr_store_ntscvbi. 1=Enable store NTSC VBI InfoFrame.
20	RW	0	ddr_store_mpegs. 1=Enable store MPEG Source InfoFrame.
19	RW	0	ddr_store_aif. 1=Enable store Audio InfoFrame.
18	RW	0	ddr_store_spd. 1=Enable store Source Product Description InfoFrame.
17	RW	0	ddr_store_avi. 1=Enable store Auxiliary Video InfoFrame.
16	RW	0	ddr_store_vsi. 1=Enable store Vendor Specific InfoFrame.
15	RW	0	ddr_store_emp. 1=Enable store Extended Metadata packet.
14	RW	0	ddr_store_obm. 1=Enable store One bit Multi-stream audio sample packet.
13	RW	0	ddr_store_mas. 1=Enable store Multi-Stream Audio sample packet.
12	RW	0	ddr_store_amp. 1=Enable store Audio Metadata packet.
11	RW	0	ddr_store_ob3d. 1=Enable store One Bit 3D audio sample packet.
10	RW	0	ddr_store_auds3d. 1=Enable store 3D Audio Sample packet.
9	RW	0	ddr_store_gmd. 1=Enable store Gamut MetaData packet.
8	RW	0	ddr_store_hbr. 1=Enable store High-BitRate audio stream packet.
7	RW	0	ddr_store_dst. 1=Enable store DST audio packet.
6	RW	0	ddr_store_oba. 1=Enable store One Bit Audio sample packet.
5	RW	0	ddr_store_isrc2. 1=Enable store ISRC2 packet.
4	RW	0	ddr_store_isrc1. 1=Enable store ISRC1 packet.
3	RW	0	ddr_store_acp. 1=Enable store Audio Content Protection packet.
2	RW	0	ddr_store_gcp. 1=Enable store General Control packet.
1	RW	0	ddr_store_auds. 1=Enable store Audio Sample packet.
0	RW	0	ddr_store_acr. 1=Enable store Audo Clock Regeneration packet.

Table 10-87 HDMIRX_TOP_EMP_CNTL_0

Bit	R/W	Default	Description
23:16	RW	0	hs_beat_rate. 0=Break-up DDR write burst on every Hsync rise; N=Break-up DDR write burst on the (N+1)th Hsync rise. Appliable only for EMP-to-DDR mode.
15	RW	0	pkt_clean_mode.

Amlogic Proprietary and Confidential
Copyright © Amlogic. All rights reserved.

Bit	R/W	Default	Description
			0=Store packet regardless of BCH error; 1=Only store packet that is clean of BCH error. Appliable only for EMP-to-DDR mode.
14	RW	0	buffer_info_mode. 0=Buffer received-packet-count and DDR-pointer-in-use on EMP_FIELD_DONE; 1=Buffer on the last EMP packet. Appliable only for EMP-to-DDR mode.
13	RW	0	reset_on_de. 1=Reset on DE rise. Appliable only for EMP-to-DDR mode.
12	RW	0	brst_end_on_last_emp. 1=Break-up DDR write burst at the last EMP packet. 0=Do not break-up. The burst will end at 16x128-bit, or at programmable Hsync interval or at DE rise. Note: Set this bit to 0 for TMDS-to-DDR mode.
11:2	RW	0	de_rise_delay. 0=Generate DE rise on actual DE rise; N=Generate DE rise (N+1) tmds_clk cycles after actual DE rise. Applicable only for EMP-to-DDR mode.
1:0	RW	0	Endian for DDR storage. 0=Little-endian. 3=Big-endian per 8-byte.

Table 10-88 HDMIRX_TOP_EMP_CNTL_1

Bit	R/W	Default	Description
1	RW	0	ddr_mode. 0=Store packet, EMP-to-DDR; 1=Store tmds character from PHY, TMDS-to-DDR.
0	RW	0	ddr_en. 1=Enable storing either packet or tmds to DDR.

Table 10-89 HDMIRX_TOP_EMP_CNTMAX

Bit	R/W	Default	Description
31:0	RW	0	For EMP-to-DDR, maximum number of packets to store per frame; For TMDS-to-DDR, maximum number of 3x10-b tmds characters to store.

Table 10-90 HDMIRX_TOP_EMP_ERR_STAT

Bit	R/W	Default	Description
9	R	0	packet_num_exceeds_max
8	R	0	axi_overdue
7	R	0	bfifo_underflow
6	R	0	bfifo_overflow
5	R	0	axi_bresp error
4	R	0	Extra axi_bresp
3	R	0	wfifo_underflow

Amlogic Proprietary and Confidential
Copyright © Amlogic. All rights reserved.

Bit	R/W	Default	Description
2	R	0	wfifo_overflow
1	R	0	awfifo_underflow
0	R	0	awfifo_overflow

Table 10-91 HDMIRX_TOP_EMP_RCV_CNT_CUR

Bit	R/W	Default	Description
31:0	R	0	packet_rcv_cnt_cur. Current received packet count. Appliable only for EMP-to-DDR mode..

Table 10-92 HDMIRX_TOP_EMP_RCV_CNT_BUF

Bit	R/W	Default	Description
31:0	R	0	packet_rcv_cnt_buf. Received packet count, buffered on either LAST_EMP_DONE or EMP_FIELD_DONE. Appliable only for EMP-to-DDR mode.

Table 10-93 HDMIRX_TOP_EMP_DDR_ADDR_CUR

Bit	R/W	Default	Description
31:0	R	0	Current DDR pointer[33:2]. Low 2-bit always 0.

Table 10-94 HDMIRX_TOP_EMP_DDR_PTR_S_BUF

Bit	R/W	Default	Description
31:0	R	0	DDR start pointer[33:2] buffered on either LAST_EMP_DONE or EMP_FIELD_DONE. Appliable only for EMP-to-DDR mode.

Table 10-95 HDMIRX_TOP_EMP_STAT_0

Bit	R/W	Default	Description
31	R	0	odd_field
26:18	R	0	wfifo_count
17:16	R	0	axi_w_state. 0=IDLE; 1=WAIT_READY_L; 2=WAIT_READY_H.
10:2	R	0	awfifo_cnt
1:0	R	0	axi_aw_state. 0=IDLE; 1=WAIT_READY; 2=WAIT_W.

Table 10-96 HDMIRX_TOP_EMP_STAT_1

Bit	R/W	Default	Description
15:0	R	0	aw_pending_cnt

Amlogic Proprietary and Confidential
Copyright © Amlogic. All rights reserved.

Table 10-97 HDMIRX_TOP_PHYIF_CNTL0

Bit	R/W	Default	Description
15:0	RW	0	ckdt_sel. 0/1=Select hdmirx_sqofclk as clock detect signal to PHY digital; 2=Select hdmirx_tmdsvalid as clock detect signal to PHY digital; 3=Select hdmirx_pll_lock as clock detec signal to PHY digital.

Table 10-98 HDMIRX_TOP_FIX_DISABLE_0

Bit	R/W	Default	Description
31:0	RW	0	fix_disable[31:0]. Each bit to control whether to fix a internal time crossing bug. 0=Enable fix; 1=Go back to original behavior.

Table 10-99 HDMIRX_TOP_MISC_STAT0

Bit	R/W	Default	Description
9	R	0	hdmirx_pll_lock status from PHY
8	R	0	hdmirx_tmdsvalid status from PHY
2	R	0	Hsync polarity
1	R	0	Vsync polarity
0	R	0	PHY.sqofclk status

Table 10-100 HDMIRX_TOP_OVID_OVERRIDE0

Bit	R/W	Default	Description
31	R	0	vid_comp_override 1=Override vid_comp0/1/2 output to VDIN with manual values. For production test.
29:20	RW	0	vid_comp2_manual[9:0] to VDIN
19:10	RW	0	vid_comp1_manual[9:0] to VDIN
9:0	RW	0	vid_comp0_manual[9:0] to VDIN

Table 10-101 HDMIRX_TOP_OVID_OVERRIDE1

Bit	R/W	Default	Description
21	RW	0	hdcp_enc_state to VDIN
20	RW	0	VS to VDIN
19	RW	0	HS to VDIN
18	RW	0	Field to VDIN
17	RW	0	DE to VDIN
16	RW	0	dpix to VDIN
9:0	RW	0	vid_comp2_manual[19:10] to VDIN

Amlogic Proprietary and Confidential
Copyright © Amlogic. All rights reserved.

Table 10-102 HDMIRX_TOP_SECURE_INDEX

Bit	R/W	Default	Description
4:0	RW	0	Start pointer of the 32-deep secure core register table

Table 10-103 HDMIRX_TOP_SECURE_DATA

Bit	R/W	Default	Description
15:0	RW	0	The core register address value to be programmed into the 32-deep table.

Table 10-104 HDMIRX_TOP_SECURE_MODE

Bit	R/W	Default	Description
1	RW	0	cor_reg_access_en: 0=Cannot access Controller core registers; 1=Enable access Controller core register.

Table 10-105 HDMIRX_TOP_EDID_ADDR0_S - HDMIRX_TOP_EDID_ADDR0_E(0x1000-0x11ff)

0x1000 for port0’s EDID byte 0, 0x1001 for port0’s EDID byte1, and so on. Store up to 512-byte EDID data.

Bit	R/W	Default	Description
7:0	RW	0	Port0’s EDID byte.

Table 10-106 HDMIRX_TOP_EDID_ADDR1_S - HDMIRX_TOP_EDID_ADDR1_E(0x1200-0x13ff)

0x1200 for port1’s EDID byte 0, 0x1201 for port1’s EDID byte1, and so on. Store up to 512-byte EDID data.

Bit	R/W	Default	Description
7:0	RW	0	Port1’s EDID byte.

Table 10-107 HDMIRX_TOP_EDID_ADDR2_S - HDMIRX_TOP_EDID_ADDR2_E(0x1400-0x15ff)

0x1400 for port2’s EDID byte 0, 0x1401 for port2’s EDID byte1, and so on. Store up to 512-byte EDID data.

Bit	R/W	Default	Description
7:0	RW	0	Port2’s EDID byte.

10.1.5.1.3 Operating Procedure

EMP-To-DDR: Store Extended Metadata Packet to DDR

1. EMPs are transmitted during the video blanking periods. DE rise edge signals the end of video blanking period, where the packets should all have been received, and the content of the packets should apply to the first active video pixel following the video blank.

Amlogic Proprietary and Confidential
Copyright © Amlogic. All rights reserved.

2. Enable emp_field_done interrupt by setting HDMIRX_TOP_INTR_MASKN bit[25]=1.
3. Program the following DDR start address pointers A and B, the DDR start pointer will alternate between A and B frame-by-frame. The address must be at least 16-byte aligned, meaning the low 4-bit will be ignored.
   - HDMIRX_TOP_EMP_DDR_START_A programs address[33:2] where low 2-bit=0, hence address[3:0]=0 for 16-byte aligned.
   - HDMIRX_TOP_EMP_DDR_START_B programs address[33:2] where low 2-bit=0, hence address[3:0]=0 for 16-byte aligned.
4. Program HDMIRX_TOP_EMP_DDR_FILTER, to select the packet type(s) to be stored in DDR.
5. Program HDMIRX_TOP_EMP_CNTMAX to limit the number packets to be stored in DDR. E.g., if this register is set to 5, only the first 5 type-selected packets are allow to go to DDR.
6. Program HDMIRX_TOP_EMP_CNTL_0 appropriately, for detail refer to register description section 2.88. Recommended values for the following bit fields:
   - [23:16] hs_beat_rate=0xf
   - [14] buffer_info_mode=0
   - [13] reset_on_de=1
   - [12] burst_end_on_last_emp=1
   - [11:2] de_rise_delay=0
   - [1:0] Endian = 0
7. Write HDMIRX_TOP_EMP_CNTL_1 bit[1] ddr_mode=0 first, to select the function mode to be EMP-to-DDR.

   Then write HDMIRX_TOP_EMP_CNTL_1 bit[0] ddr_en=1, to enable the function.
8. On emp_field_done interrupt, read the following registers to determine where and how many packets in DDR:

   HDMIRX_TOP_EMP_DDR_PTR_S_BUF – The DDR start pointer[33:2] to read the stored packets

   HDMIRX_TOP_EMP_RCV_CNT_BUF – The number of packets stored in DDR
9. The format of the packet data in DDR memory (little-endian) is as below: ---------- 1st received Packet
   Addr_S+0:Packet Header HB0 (E.g: EMP=0x7F, DRM=0x87)
   Addr_S+1:Packet Header HB1 (E.g: EMP=0x80/0x00/0x40, DRM=InfoFrame_version)
   Addr_S+2:Packet Header HB2 (E.g: EMP=Sequence_index, DRM=InfoFrame_length)
   Addr_S+3:Packet Header PB0 (E.g: EMP=Payload byte0, DRM=Checksum byte)
   Addr_S+4:Packet Header PB1 (E.g: EMP=Payload byte1, DRM=Byte1)
   Addr_S+5:Packet Header PB2 (E.g: EMP=Payload byte2, DRM=Byte2)
   ……
   Addr_S+30:Packet Header PB27 (E.g: EMP=Payload byte27, DRM=Byte27)
   Addr_S+31:0x00
   ---------- 2nd received Packet
   Addr_S+32:Packet Header HB0
   ……
   Addr_S+63:0x00
   ---------- 3rd received Packet
   ……
   ……

Amlogic Proprietary and Confidential
Copyright © Amlogic. All rights reserved.

```
---------------------------------- N-th/Last received Packet
Addr_S+32*(N-1):Packet Header HB0
……
Addr_S+32*N-1:0x00
----------------------------------
```

Note

- *Addr_S* is the start address of a DDR location to store the packet data, must be 16-byte aligned. If use LPDDR4 which is most efficient at 64-byte aligned access, then it is better that the Addr_S is 64-byte aligned, for memory bandwidth efficiency.
- *N* is the total number of packets that were received in a Frame. Need 32**N* byte memory space.
- All types of packets are supported.

TMDS-To-DDR: Store TMDS characters to DDR

1. This function stores a pre-defined number of 3-channel TMDS characters from PHY, into DDR. It is for debugging only, and can not co-exist with EMP-to-DDR function. If EMP-to-DDR is enabled, then you cannot do TMDS-to-DDR, and vice-versa.
2. If previously EMP-to-DDR is enabled, disable it by write HDMIRX_TOP_EMP_CNTL_1 bit[0] ddr_en=0.
3. Wait until HDMIRX_TOP_EMP_STAT_0 bit[30:0] reads back 0, and HDMIRX_TOP_EMP_STAT_1 reads back 0.
4. Check no error in HDMIRX_TOP_EMP_ERR_STAT.
5. Enable last_emp_done interrupt by setting HDMIRX_TOP_INTR_MASKN bit[26]=1.
6. Program HDMIRX_TOP_EMP_DDR_START_A as the DDR start address[33:2] to store TMDS.
7. Program HDMIRX_TOP_EMP_CNTMAX to limit the number 3x10-bit TMDS to be stored in DDR. E.g., if this register is set to 8-1=7, then 8 of 3x10-bit TMDS characters will be stored to DDR.

   (HDMIRX_TOP_EMP_CNTMAX + 1) must be integer multipler of 8.
8. Program HDMIRX_TOP_EMP_CNTL_0 appropriately, for detail refer to the register description. Recommended values for the following bit fields:
   - [23:16] hs_beat_rate. N/A for TMDS-to-DDR.
   - [14] buffer_info_mode. N/A for TMDS-to-DDR.
   - [13] reset_on_de. N/A for TMDS-to-DDR.
   - [12] burst_end_on_last_emp=0. **Note: Must be 0 for TMDS-to-DDR.**
   - [11:2] de_rise_delay. N/A for TMDS-to-DDR.
   - [1:0] Endian = 0
   - Write HDMIRX_TOP_EMP_CNTL_1 bit[1] ddr_mode=1 first, to select the function mode to be TMDS-to-DDR.

     Then write HDMIRX_TOP_EMP_CNTL_1 bit[0] ddr_en=1, to enable recording TMDS.
   - On last_emp_done interrupt, write HDMIRX_TOP_EMP_CNTL_1 bit[0] ddr_en=0. Dump DDR from address HDMIRX_TOP_EMP_DDR_START_A, of (HDMIRX_TOP_EMP_CNTMAX + 1)*4 bytes.
   - The format of TMDS data in DDR memory (little-endian) is as below:

     ```
     ---------- 1st 3x10-bit TMDS
     ```


Amlogic Proprietary and Confidential
Copyright © Amlogic. All rights reserved.

```
{Addr_S+3,+2,+1,+0}:{2'h0, tmds_ch2[9:0], tmds_ch1[9:0], tmds_ch0[9:0]}
---------------------------------- 2nd 3x10-bit TMDS
{Addr_S+7,+6,+5,+4}:{2'h0, tmds_ch2[9:0], tmds_ch1[9:0], tmds_ch0[9:0]}
---------------------------------- 3rd 3x10-bit TMDS
……
……
---------------------------------- N-th/Last 3x10-bit TMDS
Addr_S+32*(N-1):Packet Header HB0
……
Addr_S+32*N-1:0x00
{Addr_S+(N-1)*4+3 ,+(N-1)*4+2, ,+(N-1)*4+1,+(N-1)*4}:
{2'h0, tmds_ch2[9:0], tmds_ch1[9:0], tmds_ch0[9:0]}
----------------------------------
```

Note

- *Addr_S* is the start address of a DDR location to store the packet data, must be 16-byte aligned. If use LPDDR4 which is most efficient at 64-byte aligned access, then it is better that the Addr_S is 64-byte aligned, for memory bandwidth efficiency.
- *N* is the total number of 3x10-bit TMDS that were stored in DDR. Need 4**N* byte memory space.

Audo Clock Measure: Periodic measure (meas_mode=0)

This function measures the frequency of either Audio PLL clk or internal digital ACR clk.

1. Select either Audio PLL clk or digital ACR clk to measure: HDMIRX_TOP_ACR_CNTL_STAT bit[1] – 0=Audio PLL clk; 1=digital ACR clk.
2. Program ref_clk to 24MHz xtal clock for measuring audio clk. HHI_HDMIRX_METER_CLK_CNTL
   - [6:0] clk_div = 0
   - [8] clk_en = 1
   - [10:9] clk_sel = 0, to select xtal clock 24MHz.
3. Initialization: HDMIRX_TOP_AUDMEAS_CTRL
   - [0] sw_reset = 1
   - [1] enable = 1
   - [2] meas_mode = 0
   - [31:16] meas_tolerance = appropriate value, e.g. 2 for Aud PLL, 500 for ACR.

   HDMIRX_TOP_AUDMEAS_CYCLES_M1 = meas_cycles_m1[31:0]. Set to appropriate value, e.g. 65535.
4. Start measure: HDMIRX_TOP_AUDMEAS_CTRL

   [0] sw_reset= 0
5. One measure period is T(audio clk) * (meas_cycles_m1+1). From initialization, wait about two periods, because the very first period maybe an incomplete measure.
6. Read back the result periodically.
   - HDMIRX_TOP_AUDMEAS_REF_CYCLES_STAT0 – ref_cycles_m1[31:0]
   - HDMIRX_TOP_AUDMEAS_REF_CYCLES_STAT1
   - [15:0] ref_cycles_m1[47:32]

Amlogic Proprietary and Confidential
Copyright © Amlogic. All rights reserved.

- [16] ref_cycles_overflow. N/A for periodic measure.
- [17] meas_stable.
- [31:24] timestamp_num. N/A for periodic measure.

7. The audio clock frequency is:Freq(audio_clk) = Freq(ref_clk) * (meas_cycles_m1+1) / (ref_cycles_m1+1)

   If meas_stable=0, it means that, between the two measure periods, the difference of ref_cycles_m1 exceeds meas_tolerance.

   ABS(last ref_cycles_m1 - current ref_cycles_m1) > meas_tolerance.

Audo Clock Measure: Timestamp (meas_mode=1)

This function generates audio clock timestamps.

1. Select either Audio PLL clk or digital ACR clk to measure: HDMIRX_TOP_ACR_CNTL_STAT bit[1] – 0=Audio PLL clk; 1=digital ACR clk.
2. Program ref_clk to 24MHz xtal clock for measuring audio clk.

   HHI_HDMIRX_METER_CLK_CNTL

   - [6:0] clk_div = 0
   - [8] clk_en = 1
   - [10:9] clk_sel = 0, to select xtal clock 24MHz.

3. Initialization: HDMIRX_TOP_AUDMEAS_CTRL

   - [0] sw_reset = 1
   - [1] enable = 1
   - [2] meas_mode = 1
   - [31:16] meas_tolerance. N/A for timestamp mode.

   HDMIRX_TOP_AUDMEAS_CYCLES_M1 = meas_cycles_m1[31:0]. Set to appropriate value, e.g. 65535.

4.

   Start measure: HDMIRX_TOP_AUDMEAS_CTRL

   [0] sw_reset = 0

5. One measure period is T(audio clk) * (meas_cycles_m1+1). From initialization, wait about two periods, because the very first period maybe an incomplete measure.
6.

   Read back the result periodically.

   HDMIRX_TOP_AUDMEAS_REF_CYCLES_STAT0 – ref_cycles_m1[31:0]

   HDMIRX_TOP_AUDMEAS_REF_CYCLES_STAT1

   - [15:0] ref_cycles_m1[47:32]
   - [16] ref_cycles_overflow
   - [17] meas_stable. N/A for timestamp mode.
   - [31:24] timestamp_num

Amlogic Proprietary and Confidential
Copyright © Amlogic. All rights reserved.

7. timestamp_num and ref_cycles_m1 reflects the time elapsed since the beginning of measurement. timestamp_num shows the number of measure periods elapsed since measure begins; (ref_ cycles_m1+1) shows the total number of ref_clk cycles since measure begins.
8. To assist timestamp checking, AUDMEAS interrupt can be enabled to generate one interrupt per measure period. Refer to reg HDMIRX_TOP_AUDMEAS_INTR_MASKN/STAT.

Protect a selection of core registers to be secure mode access only

1. After reset, none of the IP registers are accessible, regardless secure mode or not.
2. Via secure mode, program HDMIRX_TOP_SECURE_INDEX to an appropriate value, e.g. = 0
3. Repetitively use secure write to HDMIRX_TOP_SECURE_DATA with the list of IP register addresses that you'd like to set to be secure-access only. Only up to 32 IP registers can be selected.
4. Then write to 1 to HDMIRX_TOP_SECURE_MODE, to enable IP register access.

10.1.5.2 HDMIRX PHY Registers

Register Address

For below registers the base address is 0xfe39c000.

Each register final address = BASE + address * 4.

The following lists describe the mapping between each register and its address.

- HDMIRX_APLL_CNTL0 0xfe39c000
- HDMIRX_APLL_CNTL1 0xfe39c004
- HDMIRX_APLL_CNTL2 0xfe39c008
- HDMIRX_APLL_CNTL3 0xfe39c00c
- HDMIRX_APLL_CNTL4 0xfe39c010
- HDMIRX_PHY_MISC0 0xfe39c014
- HDMIRX_PHY_MISC1 0xfe39c018
- HDMIRX_PHY_MISC2 0xfe39c01c
- HDMIRX_PHY_MISC3 0xfe39c020
- HDMIRX_PHY_DCHA_CNTL0 0xfe39c024
- HDMIRX_PHY_DCHA_CNTL1 0xfe39c028
- HDMIRX_PHY_DCHA_CNTL2 0xfe39c02c
- HDMIRX_PHY_DCHA_CNTL3 0xfe39c030
- HDMIRX_PHY_DCHD_CNTL0 0xfe39c034
- HDMIRX_PHY_DCHD_CNTL1 0xfe39c038
- HDMIRX_PHY_DCHD_CNTL2 0xfe39c03c
- HDMIRX_PHY_DCHD_CNTL3 0xfe39c040
- HDMIRX_PHY_DCHD_CNTL4 0xfe39c044
- HDMIRX_PHY_MISC_STAT 0xfe39c048
- HDMIRX_PHY_DCHD_STAT 0xfe39c04c
- HDMIRX_AUD_PLL_CNTL 0xfe39c080
- HDMIRX_AUD_PLL_CNTL2 0xfe39c084
- HDMIRX_AUD_PLL_CNTL3 0xfe39c088
- HDMIRX_AUD_PLL_CNTL_I 0xfe39c08c
- HDMIRX_AUD_PLL4X_CNTL 0xfe39c090
- HDMIRX_PHY_PROD_TEST0 0xfe39c0c0
- HDMIRX_PHY_PROD_TEST1 0xfe39c0c4

Amlogic Proprietary and Confidential
Copyright © Amlogic. All rights reserved.

- HDMIRX_EARCTX_CNTL0 0xfe39c100
- HDMIRX_EARCTX_CNTL1 0xfe39c104
- HDMIRX_ARC_CNTL 0xfe39c108

Register Description

Table 10-108 HDMIRX_APLL_CNTL0 0x00

Bit(s)	R/W	Default	Description
[31]	R	0	apll_lock
[30]	R	0	apll_afc_done
[29]	R/W	1	apll_reset
[28]	R/W	0	apll_en
[27]	R/W	0	apll_vco_div_sel
[26]	R/W	0	apll_afc_start
[14:10]	R/W	0	apll_prediv_sel
[7:0]	R/W	0	apll_fbkdiv

Table 10-109 HDMIRX_APLL_CNTL1 0x01

Bit(s)	R/W	Default	Description
[20]	R/W	0	apll_sdm_en
[18:0]	R/W	0	apll_sdm_frac

Table 10-110 HDMIRX_APLL_CNTL2 0x02

Bit(s)	R/W	Default	Description
[31:28]	R/W	0	apll_ssc_dep_sel
[26:24]	R/W	0	apll_ssc_fref_sel
[23:22]	R/W	0	apll_ssc_mode
[21:20]	R/W	0	apll_ssc_offset
[19:16]	R/W	0	apll_str_m
[15:0]	R/W	0	apll_reserve

Table 10-111 HDMIRX_APLL_CNTL3 0x03

Bit(s)	R/W	Default	Description
[31]	R/W	0	apll_afc_bypass_en
[29:28]	R/W	0	apll_afc_hold_t
[26:20]	R/W	0	apll_afc_in
[19]	R/W	0	apll_afc_nt
[18:17]	R/W	0	apll_afc_div

Amlogic Proprietary and Confidential
Copyright © Amlogic. All rights reserved.

Bit(s)	R/W	Default	Description
[16]	R/W	0	apll_bias_lpf_en
[15:12]	R/W	0	apll_cp_icap
[11:8]	R/W	0	apll_cp_ires
[5:4]	R/W	0	apll_cpi
[2:0]	R/W	0	apll_hdmi_aud_cntl

Table 10-112 HDMIRX_APLL_CNTL4 0x04

Bit(s)	R/W	Default	Description
[27:24]	R/W	0	apll_hdmi_cntl
[23]	R/W	0	apll_vctrl_mon_en
[21:20]	R/W	0	apll_lpf_cap
[19:16]	R/W	0	apll_lpf_capadj
[13:12]	R/W	0	apll_lpf_res
[11]	R/W	0	apll_lpf_sf
[10]	R/W	0	apll_lvr_od_en
[9]	R/W	0	apll_refclk_mon_en
[8]	R/W	0	apll_fbkclk_mon_en

Table 10-113 HDMIRX_PHY_MISC0 0x05

Bit(s)	R/W	Default	Description
[31:0]	R/W	0	hdmirx_misc[31:0]

Table 10-114 HDMIRX_PHY_MISC1 0x06

Bit(s)	R/W	Default	Description
[31:0]	R/W	0	hdmirx_misc[63:32]

Table 10-115 HDMIRX_PHY_MISC2 0x07

Bit(s)	R/W	Default	Description
[31:0]	R/W	0	hdmirx_misc[95:64]

Table 10-116 HDMIRX_PHY_MISC3 0x08

Bit(s)	R/W	Default	Description
[31:0]	R/W	0	hdmirx_misc[127:96]

Amlogic Proprietary and Confidential
Copyright © Amlogic. All rights reserved.

Table 10-117 HDMIRX_PHY_DCHA_CNTL0 0x09

Bit(s)	R/W	Default	Description
[31:0]	R/W	0	hdmirx_dcha_afe[31:0]

Table 10-118 HDMIRX_PHY_DCHA_CNTL1 0x0a

Bit(s)	R/W	Default	Description
[31:0]	R/W	0	hdmirx_dcha_dfe[31:0]

Table 10-119 HDMIRX_PHY_DCHA_CNTL2 0x0b

Bit(s)	R/W	Default	Description
[31:0]	R/W	0	hdmirx_dcha_ctrl[31:0]

Table 10-120 HDMIRX_PHY_DCHA_CNTL3 0x0c

Bit(s)	R/W	Default	Description
[15:0]	R/W	0	hdmirx_dcha_pi[31:0]

Table 10-121 HDMIRX_PHY_DCHD_CNTL0 0x0d

Bit(s)	R/W	Default	Description
[31:0]	R/W	0	hdmirx_dchd_cdr[31:0]

Table 10-122 HDMIRX_PHY_DCHD_CNTL1 0x0e

Bit(s)	R/W	Default	Description
[31:0]	R/W	0	hdmirx_dchd_byp[31:0]

Table 10-123 HDMIRX_PHY_DCHD_CNTL2 0x0f

Bit(s)	R/W	Default	Description
[31:0]	R/W	0	hdmirx_dchd_dfe[31:0]

Table 10-124 HDMIRX_PHY_DCHD_CNTL3 0x10

Bit(s)	R/W	Default	Description
[31:0]	R/W	0	hdmirx_dchd_taps[31:0]

Table 10-125 HDMIRX_PHY_DCHD_CNTL4 0x11

Bit(s)	R/W	Default	Description
[31:0]	R/W	0	hdmirx_dchd_eye[31:0]

Amlogic Proprietary and Confidential
Copyright © Amlogic. All rights reserved.

Table 10-126 HDMIRX_PHY_MISC_STAT 0x12

Bit(s)	R/W	Default	Description
[10:1]	R	0	reserved
[0]	R	0	reserved

Table 10-127 HDMIRX_PHY_DCHD_STAT 0x13

Bit(s)	R/W	Default	Description
[23:16]	R	0	sta_dchd2
[15:8]	R	0	sta_dchd1
[7:0]	R	0	sta_dchd0

HDMIRX_AUD_PLL_CNTL 0x20

Original HIU_AUD_PLL_CNTL

HDMIRX_AUD_PLL_CNTL2 0x21

Original HIU_AUD_PLL_CNTL2

HDMIRX_AUD_PLL_CNTL3 0x22

Original HIU_AUD_PLL_CNTL3

HDMIRX_AUD_PLL_CNTL3 0x22

Original HIU_AUD_PLL_CNTL3

HDMIRX_AUD_PLL_CNTL_I 0x23

Original HIU _AUD_PLL_CNTL_I

HDMIRX_AUD_PLL4X_CNTL 0x24

Original HIU _AUD_PLL4X_CNTL

Table 10-128 HDMIRX_PHY_PROD_TEST0 0x30

Bit(s)	R/W	Default	Description
[31:1]	R	0	prod_test_reg0

Table 10-129 HDMIRX_PHY_PROD_TEST1 0x31

Bit(s)	R/W	Default	Description
[31:1]	R	0	prod_test_reg1

Table 10-130 HDMIRX_EARCTX_CNTL0 0x40

Bit(s)	R/W	Default	Description
[31:1]	R	0	prod_test_reg1

Amlogic Proprietary and Confidential
Copyright © Amlogic. All rights reserved.

HDMIRX_EARCTX_CNTL1 0x41
HDMIRX_ARC_CNTL 0x42

10.1.6 CEC Registers

10.1.6.1 CEC Top-level Registers

Register Address

The following lists describe the mapping between each register and its address.

Address	Register	RW	Function
0xfe044000	CECA_GEN_CNTL	RW	CECA general control.
0xfe044004	CECA_RW_REG	RW	CECA internal register access.
0xfe044008	CECA_INTR_MASKN	RW	CECA interrupt mask.
0xfe04400c	CECA_INTR_CLR	RW	CECA interrupt clear.
0xfe044010	CECA_INTR_STAT	RW	CECA interrupt status.
0xfe044040	CECB_GEN_CNTL	RW	CECB general control.
0xfe044044	CECB_RW_REG	RW	CECB internal register access.
0xfe044048	CECB_INTR_MASKN	RW	CECB interrupt mask.
0xfe04404c	CECB_INTR_CLR	RW	CECB interrupt clear.
0xfe044050	CECB_INTR_STAT	RW	CECB interrupt status.

Register Description

Table 10-131 CECA_GEN_CNTL

Bit	R/W	Default	Description
14:12	RW	0	Filter_del. For glitch-filtering CEC line, ignore signal change pulse width < filter_ del * T(filter_tick) * 3.
9:8	RW	0	Filter_tick_sel: Select which periodical pulse for glitch-filtering CEC line signal. 0=Use T(xtal)*3=125ns; 1=Use once-per-1us pulse; 2=Use once-per-10us pulse; 3=Use once-per-100us pulse.
4	RW	0	Together with CECB_GEN_CNTL bit[4], to select whether CEC_A/B to share the same pin mux. {CECA_GEN_CNTL[4], CECB_GEN_CNTL[4]}: {0,0} = A and B separate, original behavior. Use this if pin-mux selects either A-only or B-only. {1,0} = Use this if pin-mux selects A, but also wants to use B through the same pin. {0,1} = Use this if pin-mux selects B, but also wants to use A through the same pin. {1,1} = This value is not allowed.
2:1	RW	0	Clk_cntl. 0=Disable clock; 1=Enable gated clock(normal working mode); 2=Enable free-run clock (debug mode).
0	RW	0	Sw_reset. 1=Apply reset; 0=No reset.

Amlogic Proprietary and Confidential
Copyright © Amlogic. All rights reserved.

Table 10-132 CECA_RW_REG

Bit	R/W	Default	Description
31:24	R	0	CECA internal register data read-back value.
23	R	0	Cec_reg_busy. 1=Current register access is busy, do not start another register access yet; 0=Idle, safe to start a new register access.
16	RW	0	CECA internal register access mode. 1=Write; 0=Read.
15:8	RW	0	CECA internal register data write value.
7:0	RW	0	CECA internal register address offset. Refer to CECA reg spec.

Table 10-133 CECA_INTR_MASKN

Bit	R/W	Default	Description
2:0	RW	0	Interrupt mask. One bit for each interrupt source. Each bit: 0=Mask interrupt; 1=Enable interrupt. Note: For interrupt source description refer to CECA_INTR_STAT.

Table 10-134 CECA_INTR_CLR

Bit	R/W	Default	Description
2:0	RW	0	Interrupt clear. One bit for each interrupt source. Each bit: Write 1 to clear the respective interrupt status bit. These bits are written to 1 and automatically set back to 0. Note: For interrupt source description refer to CECA_INTR_STAT.

Table 10-135 CECA_INTR_STAT

Bit	R/W	Default	Description
2:0	R	0	Interrupt status. One bit for each interrupt source. Bit 0: HOST_ACK. 1=CECA internal register access action done. Bit 1: CEC_TX_INT. 1=CECA TX status update. Bit 2: CEC_RX_INT. 1=CECA RX status update.

Table 10-136 CECB_GEN_CNTL

Bit	R/W	Default	Description
14:12	RW	0	Filter_del. For glitch-filtering CEC line, ignore signal change pulse width < filter_del * T(filter_tick) * 3.
9:8	RW	0	Filter_tick_sel: Select which periodical pulse for glitch-filtering CEC line signal. 0=Use T(xtal)*3=125ns; 1=Use once-per-1us pulse; 2=Use once-per-10us pulse; 3=Use once-per-100us pulse.
4	RW	0	Refer to CECA_GEN_CNTL bit[4].
3	RW	0	Sysclk_en. 0=Disable system clk; 1=Enable system clk.

Amlogic Proprietary and Confidential
Copyright © Amlogic. All rights reserved.

Bit	R/W	Default	Description
2:1	RW	0	Clk_cntl. 0=Disable clock; 1=Enable gated clock(normal working mode); 2=Enable free-run clock (debug mode).
0	RW	0	Sw_reset. 1=Apply reset; 0=No reset.

Table 10-137 CECB_RW_REG

Bit	R/W	Default	Description
31:24	R	0	CECB internal register data read-back value.
16	RW	0	CECB internal register access mode. 1=Write; 0=Read.
15:8	RW	0	CECB internal register data write value.
7:0	RW	0	CECB internal register address offset. Refer to CECB reg spec.

Table 10-138 CECB_INTR_MASKN

Bit	R/W	Default	Description
6:0	RW	0	Interrupt mask. One bit for each interrupt source. Each bit: 0=Mask interrupt; 1=Enable interrupt. Note: For interrupt source description refer to CECB_INTR_STAT.

Table 10-139 CECB_INTR_CLR

Bit	R/W	Default	Description
6:0	RW	0	Interrupt clear. One bit for each interrupt source. Each bit: Write 1 to clear the respective interrupt status bit. These bits are written to 1 and automatically set back to 0. Note: For interrupt source description refer to CECB_INTR_STAT.

Table 10-140 CECB_INTR_STAT

Bit	R/W	Default	Description
6:0	R	0	Interrupt status. One bit for each interrupt source. Bit 0: CECB Done interrupt flag status. Bit 1: CECB End of Message interrupt flag status. Bit 2: CECB Not Acknowledge interrupt flag status. Bit 3: CECB Arbitration Loss interrupt flag status. Bit 4: CECB Initiator Error interrupt flag status. Bit 5: CECB Follower Error interrupt flag status. Bit 6: CECB Wake-up interrupt flag status.

10.1.6.2 CECA Registers

Register Access

Accessing CEC_A internal registers is by indirectly method through a register.

```
#define     CECA_RW_REG  (0xfe044000 + (0x001 << 2))
```


Amlogic Proprietary and Confidential
Copyright © Amlogic. All rights reserved.

```
void ceca_wr_only_reg (uint32_t addr, uint32_t data)
{
    uint32_t     data32;

    data32  = 0;
    data32 |= (1     << 16); // [16]      cec_reg_wr
    data32 |= (data << 8);  // [15:8]    cec_reg_wrdata
    data32 |= (addr << 0);  // [7:0]     cec_reg_addr
    Wr(CECA_RW_REG,  data32);
} /* cec_wr_only_reg */

uint32_t cec_rd_reg (uint32_t addr)
{
    uint32_t     data32;

    data32  = 0;
    data32 |= (0     << 16); // [16]      cec_reg_wr
    data32 |= (0     << 8);  // [15:8]    cec_reg_wrdata
    data32 |= (addr << 0);  // [7:0]     cec_reg_addr
    Wr(CECA_RW_REG,  data32);

    data32 = ((Rd(CECA_RW_REG)) >> 24) & 0xff;

    return (data32);
} /* cec_rd_reg */
```

Register Address

Addr	Name	RW	Function
0x00	TX_MSG_HEADER	RW	TX message Header byte.
0x01	TX_MSG_OPCODE	RW	TX message Op-code.
0x02	TX_MSG_OP1	RW	TX message 1st operand.
0x03	TX_MSG_OP2	RW	TX message 2nd operand.
0x04	TX_MSG_OP3	RW	TX message 3rd operand.
0x05	TX_MSG_OP4	RW	TX message 4th operand.
0x06	TX_MSG_OP5	RW	TX message 5th operand.
0x07	TX_MSG_OP6	RW	TX message 6th operand.
0x08	TX_MSG_OP7	RW	TX message 7th operand.
0x09	TX_MSG_OP8	RW	TX message 8th operand.
0x0A	TX_MSG_OP9	RW	TX message 9th operand.
0x0B	TX_MSG_OP10	RW	TX message 10th operand.
0x0C	TX_MSG_OP11	RW	TX message 11th operand.
0x0D	TX_MSG_OP12	RW	TX message 12th operand.
0x0E	TX_MSG_OP13	RW	TX message 13th operand.
0x0F	TX_MSG_OP14	RW	TX message 14th operand.
0x10	TX_MSG_LENGTH	RW	TX message length.
0x11	TX_MSG_CMD	RW	TX message command.
0x12-0x13	Reserved	RW	
0x14	RX_MSG_CMD	RW	Command for reading RX msg.
0x15	RX_CLEAR_BUF	RW	Clear RX msg buffer.
0x16	LOGICAL_ADDR_LO	RW	Device logical address valid[7:0].

Amlogic Proprietary and Confidential
Copyright © Amlogic. All rights reserved.

Addr	Name	RW	Function
0x17	LOGICAL_ADDR_HI	RW	Device logical address valid[15:8].
0x18-0x1A	Reserved	RW	
0x1B	CLOCK_DIV_H	RW	MSB of the clock divider.
0x1C	CLOCK_DIV_L	RW	LSB of the clock divider.
0x1D-0x1F	Reserved	RW	
0x20	QUIESCENT_25MS_BIT7_0	RW	CEC bit timing parameter.
0x21	QUIESCENT_25MS_BIT11_8	RW	CEC bit timing parameter.
0x22	STARTBITMINL2H_3MS5_ BIT7_0	RW	CEC bit timing parameter.
0x23	STARTBITMINL2H_3MS5_BIT8	RW	CEC bit timing parameter.
0x24	STARTBITMAXL2H_3MS9_ BIT7_0	RW	CEC bit timing parameter.
0x25	STARTBITMAXL2H_3MS9_BIT8	RW	CEC bit timing parameter.
0x26	STARTBITMINH_0MS6_BIT7_0	RW	CEC bit timing parameter.
0x27	STARTBITMINH_0MS6_BIT8	RW	CEC bit timing parameter.
0x28	STARTBITMAXH_1MS0_BIT7_0	RW	CEC bit timing parameter.
0x29	STARTBITMAXH_1MS0_BIT8	RW	CEC bit timing parameter.
0x2A	STARTBITMINTOTAL_4MS3_ BIT7_0	RW	CEC bit timing parameter.
0x2B	STARTBITMINTOTAL_4MS3_ BIT9_8	RW	CEC bit timing parameter.
0x2C	STARTBITMAXTOTAL_4MS7_ BIT7_0	RW	CEC bit timing parameter.
0x2D	STARTBITMAXTOTAL_4MS7_ BIT9_8	RW	CEC bit timing parameter.
0x2E	LOGIC1MINL2H_0MS4_BIT7_0	RW	CEC bit timing parameter.
0x2F	LOGIC1MINL2H_0MS4_BIT8	RW	CEC bit timing parameter.
0x30	LOGIC1MAXL2H_0MS8_BIT7_0	RW	CEC bit timing parameter.
0x31	LOGIC1MAXL2H_0MS8_BIT8	RW	CEC bit timing parameter.
0x32	LOGIC0MINL2H_1MS3_BIT7_0	RW	CEC bit timing parameter.
0x33	LOGIC0MINL2H_1MS3_BIT8	RW	CEC bit timing parameter.
0x34	LOGIC0MAXL2H_1MS7_BIT7_0	RW	CEC bit timing parameter.
0x35	LOGIC0MAXL2H_1MS7_BIT8	RW	CEC bit timing parameter.
0x36	LOGICMINTOTAL_2MS05_ BIT7_0	RW	CEC bit timing parameter.
0x37	LOGICMINTOTAL_2MS05_ BIT9_8	RW	CEC bit timing parameter.
0x38	LOGICMAXHIGH_2MS8_BIT7_ 0	RW	CEC bit timing parameter.
0x39	LOGICMAXHIGH_2MS8_BIT8	RW	CEC bit timing parameter.

Amlogic Proprietary and Confidential
Copyright © Amlogic. All rights reserved.

Addr	Name	RW	Function
0x3A	LOGICERRLOW_3MS4_BIT7_0	RW	CEC bit timing parameter.
0x3B	LOGICERRLOW_3MS4_BIT8	RW	CEC bit timing parameter.
0x3C	NOMSMPPOINT_1MS05	RW	CEC bit timing parameter.
0x3D	Reserved	RW	
0x3E	DELCNTR_LOGICERR	RW	CEC bit timing parameter.
0x3F	Reserved	RW	
0x40	TXTIME_17MS_BIT7_0	RW	CEC bit timing parameter.
0x41	TXTIME_17MS_BIT15_8	RW	CEC bit timing parameter.
0x42	TXTIME_2BIT_BIT7_0	RW	CEC bit timing parameter.
0x43	TXTIME_2BIT_BIT15_8	RW	CEC bit timing parameter.
0x44	TXTIME_4BIT_BIT7_0	RW	CEC bit timing parameter.
0x45	TXTIME_4BIT_BIT15_8	RW	CEC bit timing parameter.
0x46	STARTBITNOML2H_3MS7_ BIT7_0	RW	CEC bit timing parameter.
0x47	STARTBITNOML2H_3MS7_ BIT8	RW	CEC bit timing parameter.
0x48	STARTBITNOMH_0MS8_BIT7_ 0	RW	CEC bit timing parameter.
0x49	STARTBITNOMH_0MS8_BIT8	RW	CEC bit timing parameter.
0x4A	LOGIC1NOML2H_0MS6_BIT7_ 0	RW	CEC bit timing parameter.
0x4B	LOGIC1NOML2H_0MS6_BIT8	RW	CEC bit timing parameter.
0x4C	LOGIC0NOML2H_1MS5_BIT7_ 0	RW	CEC bit timing parameter.
0x4D	LOGIC0NOML2H_1MS5_BIT8	RW	CEC bit timing parameter.
0x4E	LOGIC1NOMH_1MS8_BIT7_0	RW	CEC bit timing parameter.
0x4F	LOGIC1NOMH_1MS8_BIT8	RW	CEC bit timing parameter.
0x50	LOGIC0NOMH_0MS9_BIT7_0	RW	CEC bit timing parameter.
0x51	LOGIC0NOMH_0MS9_BIT8	RW	CEC bit timing parameter.
0x52	LOGICERRLOW_3MS6_BIT7_0	RW	CEC bit timing parameter.
0x53	LOGICERRLOW_3MS6_BIT8	RW	CEC bit timing parameter.
0x54	CHKCONTENTION_0MS1	RW	CEC bit timing parameter.
0x55	Reserved	RW	
0x56	PREPARENXTBIT_0MS05_ BIT7_0	RW	CEC bit timing parameter.
0x57	PREPARENXTBIT_0MS05_BIT8	RW	CEC bit timing parameter.
0x58	NOMSMPACKPOINT_0MS45	RW	CEC bit timing parameter.
0x59	Reserved	RW	
0x5A	ACK0NOML2H_1MS5_BIT7_0	RW	CEC bit timing parameter.

Amlogic Proprietary and Confidential
Copyright © Amlogic. All rights reserved.

Addr	Name	RW	Function
0x5B	ACK0NOML2H_1MS5_BIT8	RW	CEC bit timing parameter.
0x5C-0x5F	Reserved	RW	
0x60	BUGFIX_DISABLE_0	RW	Bug fix control.
0x61	BUGFIX_DISABLE_1	RW	Bug fix control.
0x62-0x7F	Reserved	RW	
0x80	RX_MSG_HEADER	R	RX message Header byte.
0x81	RX_MSG_OPCODE	R	RX message Op-code.
0x82	RX_MSG_OP1	R	RX message 1st operand.
0x83	RX_MSG_OP2	R	RX message 2nd operand.
0x84	RX_MSG_OP3	R	RX message 3rd operand.
0x85	RX_MSG_OP4	R	RX message 4th operand.
0x86	RX_MSG_OP5	R	RX message 5th operand.
0x87	RX_MSG_OP6	R	RX message 6th operand.
0x88	RX_MSG_OP7	R	RX message 7th operand.
0x89	RX_MSG_OP8	R	RX message 8th operand.
0x8A	RX_MSG_OP9	R	RX message 9th operand.
0x8B	RX_MSG_OP10	R	RX message 10th operand.
0x8C	RX_MSG_OP11	R	RX message 11th operand.
0x8D	RX_MSG_OP12	R	RX message 12th operand.
0x8E	RX_MSG_OP13	R	RX message 13th operand.
0x8F	RX_MSG_OP14	R	RX message 14th operand.
0x90	RX_MSG_LENGTH	R	Length in bytes of RX message.
0x91	RX_MSG_STATUS	R	Status of the received message.
0x92	RX_NUM_MSG	R	Number of received messages.
0x93	TX_MSG_STATUS	R	Status of the transmitted message.
0x94-0x9F	Reserved	R	
0xA0	STAT_0_0	R	Internal status register.
0xA1	STAT_0_1	R	Internal status register.
0xA2	STAT_0_2	R	Internal status register.
0xA3	STAT_0_3	R	Internal status register.
0xA4	STAT_1_0	R	Internal status register.
0xA5	STAT_1_1	R	Internal status register.
0xA6	STAT_1_2	R	Internal status register.

Amlogic Proprietary and Confidential
Copyright © Amlogic. All rights reserved.

Register Description

Table 10-141 TX_MSG_HEADER

Bit	R/W	Default	Description
7:4	RW	0	Initiator Address.
3:0	RW	0	Follower Address.

Table 10-142 TX_MSG_OPCODE

Bit	R/W	Default	Description
7:0	RW	0	Op-code

Table 10-143 TX_MSG_OP1 – TX_MSG_OP14

Bit	R/W	Default	Description
7:0	RW	0	1st–14th operand.

Table 10-144 TX_MSG_LENTH

Bit	R/W	Default	Description
3:0	RW	0	Tx msg length in bytes, excluding Header byte.

Table 10-145 TX_MSG_CMD

Bit	R/W	Default	Description
1:0	RW	0	Command for transmitting a message. 0=TX_NO_OP. No transaction. 1=TX_REQ_CURRENT. Transmit message in buffer. 2=TX_ABORT. Abort transmit. 3=Same as TX_REQ_CURRENT.

Table 10-146 RX_MSG_CMD

Bit	R/W	Default	Description
1:0	RW	0	Command for reading a received message. 0=RX_NO_OP. No transaction. 1=RX_ACK_CURRENT. Read message in buffer. 2=RX_DISABLE. Disable receiving message. 3=Same as RX_ACK_CURRENT.

Table 10-147 RX_CLEAR_BUF

Bit	R/W	Default	Description
0	RW	0	Clear message in Rx buffer.

Amlogic Proprietary and Confidential
Copyright © Amlogic. All rights reserved.

Table 10-148 LOGICAL_ADDR_LO

Bit	R/W	Default	Description
7	RW	0	1=Enable receiving message destined to logical address 7.
6	RW	0	1=Enable receiving message destined to logical address 6.
5	RW	0	1=Enable receiving message destined to logical address 5.
4	RW	0	1=Enable receiving message destined to logical address 4.
3	RW	0	1=Enable receiving message destined to logical address 3.
2	RW	0	1=Enable receiving message destined to logical address 2.
1	RW	0	1=Enable receiving message destined to logical address 1.
0	RW	0	1=Enable receiving message destined to logical address 0.

Table 10-149 LOGICAL_ADDR_HI

Bit	R/W	Default	Description
7	RW	1	1=Enable receiving message destined to logical address 15.
6	RW	0	1=Enable receiving message destined to logical address 14.
5	RW	0	1=Enable receiving message destined to logical address 13.
4	RW	0	1=Enable receiving message destined to logical address 12.
3	RW	0	1=Enable receiving message destined to logical address 11.
2	RW	0	1=Enable receiving message destined to logical address 10.
1	RW	0	1=Enable receiving message destined to logical address 9.
0	RW	0	1=Enable receiving message destined to logical address 8.

Table 10-150 CLOCK_DIV_H – CLOCK_DIV_L

If CEC works in original behavior, meaning the internal beat rate is once per 0.01ms, then for example: Input clock is 24MHz, then set {CLOCK_DIV_H, CLOCK_DIV_L} = 240-1 = 239, so that the internal beat rate is once per 0.01ms. If CEC works under input clock = 32768Hz, no clock division, CLOK_DIV_H/L=0.

Bit	R/W	Default	Description
7:0	RW	0	MSB/LSB of the clock divider.

Table 10-151 QUIESCENT_25MS_BIT7_0

Bit	R/W	Default	Description
7:0	RW	0x33	Quiescent_25ms[7:0]

Table 10-152 QUIESCENT_25MS_BIT11_8

Bit	R/W	Default	Description
3:0	RW	0x3	Quiescent_25ms[11:8]

Amlogic Proprietary and Confidential
Copyright © Amlogic. All rights reserved.

Table 10-153 STARTBITMINL2H_3MS5_BIT7_0

Bit	R/W	Default	Description
7:0	RW	0x70	StartBitMinL2H_3ms5[7:0]

Table 10-154 STARTBITMINL2H_3MS5_BIT8

Bit	R/W	Default	Description
0	RW	0x0	StartBitMinL2H_3ms5[8]

Table 10-155 STARTBITMAXL2H_3MS9_BIT7_0

Bit	R/W	Default	Description
7:0	RW	0x7c	StartBitMaxL2H_3ms9[7:0]

Table 10-156 STARTBITMAXL2H_3MS9_BIT8

Bit	R/W	Default	Description
0	RW	0x0	StartBitMaxL2H_3ms9[8]

Table 10-157 STARTBITMINH_0MS6_BIT7_0

Bit	R/W	Default	Description
7:0	RW	0x11	StartBitMinH_0ms6[7:0]

Table 10-158 STARTBITMINH_0MS6_BIT8

Bit	R/W	Default	Description
0	RW	0x0	StartBitMinH_0ms6[8]

Table 10-159 STARTBITMAXH_1MS0_BIT7_0

Bit	R/W	Default	Description
7:0	RW	0x1d	StartBitMaxH_1ms0[7:0]

Table 10-160 STARTBITMAXH_1MS0_BIT8

Bit	R/W	Default	Description
0	RW	0x0	StartBitMaxH_1ms0[8]

Amlogic Proprietary and Confidential
Copyright © Amlogic. All rights reserved.

Table 10-161 STARTBITMINTOTAL_4MS3_BIT7_0

Bit	R/W	Default	Description
7:0	RW	0x8a	StartBitMinTotal_4ms3[7:0]

Table 10-162 STARTBITMINTOTAL_4MS3_BIT9_8

Bit	R/W	Default	Description
1:0	RW	0x0	StartBitMinTotal_4ms3[9:8]

Table 10-163 STARTBITMAXTOTAL_4MS7_BIT7_0

Bit	R/W	Default	Description
7:0	RW	0x96	StartBitMaxTotal_4ms7[7:0]

Table 10-164 STARTBITMAXTOTAL_4MS7_BIT9_8

Bit	R/W	Default	Description
1:0	RW	0x0	StartBitMaxTotal_4ms7[9:8]

Table 10-165 LOGIC1MINL2H_0MS4_BIT7_0

Bit	R/W	Default	Description
7:0	RW	0x0a	Logic1MinL2H_0ms4[7:0]

Table 10-166 LOGIC1MINL2H_0MS4_BIT8

Bit	R/W	Default	Description
0	RW	0x0	Logic1MinL2H_0ms4[8]

Table 10-167 LOGIC1MAXL2H_0MS8_BIT7_0

Bit	R/W	Default	Description
7:0	RW	0x16	Logic1MaxL2H_0ms8[7:0]

Table 10-168 LOGIC1MAXL2H_0MS8_BIT8

Bit	R/W	Default	Description
0	RW	0x0	Logic1MaxL2H_0ms8[8]

Table 10-169 LOGIC0MINL2H_1MS3_BIT7_0

Bit	R/W	Default	Description
7:0	RW	0x27	Logic0MinL2H_1ms3[7:0]

Amlogic Proprietary and Confidential
Copyright © Amlogic. All rights reserved.

Table 10-170 LOGIC0MINL2H_1MS3_BIT8

Bit	R/W	Default	Description
0	RW	0x0	Logic0MinL2H_1ms3[8]

Table 10-171 LOGIC0MAXL2H_1MS7_BIT7_0

Bit	R/W	Default	Description
7:0	RW	0x34	Logic0MaxL2H_1ms7[7:0]

Table 10-172 LOGIC0MAXL2H_1MS7_BIT8

Bit	R/W	Default	Description
0	RW	0x0	Logic0MaxL2H_1ms7[8]

Table 10-173 LOGICMINTOTAL_2MS05_BIT7_0

Bit	R/W	Default	Description
7:0	RW	0x40	LogicMinTotal_2ms05[7:0]

Table 10-174 LOGICMINTOTAL_2MS05_BIT9_8

Bit	R/W	Default	Description
1:0	RW	0x0	LogicMinTotal_2ms05[9:8]

Table 10-175 LOGICMAXHIGH_2MS8_BIT7_0

Bit	R/W	Default	Description
7:0	RW	0x59	LogicMaxHigh_2ms8[7:0]

Table 10-176 LOGICMAXHIGH_2MS8_BIT8

Bit	R/W	Default	Description
0	RW	0x0	LogicMaxHigh_2ms8[8]

Table 10-177 LOGICERRLOW_3MS4_BIT7_0

Bit	R/W	Default	Description
7:0	RW	0x6c	LogicErrLow_3ms4[7:0]

Amlogic Proprietary and Confidential
Copyright © Amlogic. All rights reserved.

Table 10-178 LOGICERRLOW_3MS4_BIT8

Bit	R/W	Default	Description
0	RW	0x0	LogicErrLow_3ms4[8]

Table 10-179 NOMSMPPOINT_1MS05

Bit	R/W	Default	Description
7:0	RW	0x1f	NomSmpPoint_1ms05[7:0]

Table 10-180 DELCNTR_LOGICERR

Bit	R/W	Default	Description
6:4	RW	0x3	DelCntr_LogicErrHigh[2:0]
2:0	RW	0x5	DelCntr_LogicErrLow[2:0]

Table 10-181 TXTIME_17MS_BIT7_0

Bit	R/W	Default	Description
7:0	RW	0x2c	TxTime_17ms[7:0]

Table 10-182 TXTIME_17MS_BIT15_8

Bit	R/W	Default	Description
7:0	RW	0x02	TxTime_17ms[15:8]

Table 10-183 TXTIME_2BIT_BIT7_0

Bit	R/W	Default	Description
7:0	RW	0xa2	TxTime_2Bit[7:0]

Table 10-184 TXTIME_2BIT_BIT15_8

Bit	R/W	Default	Description
7:0	RW	0x0	TxTime_2Bit[15:8]

Table 10-185 TXTIME_4BIT_BIT7_0

Bit	R/W	Default	Description
7:0	RW	0x3f	TxTime_4Bit[7:0]

Amlogic Proprietary and Confidential
Copyright © Amlogic. All rights reserved.

Table 10-186 TXTIME_4BIT_BIT15_8

Bit	R/W	Default	Description
7:0	RW	0x01	TxTime_4Bit[15:8]

Table 10-187 STARTBITNOML2H_3MS7_BIT7_0

Bit	R/W	Default	Description
7:0	RW	0x78	StartBitNomL2H_3ms7[7:0]

Table 10-188 STARTBITNOML2H_3MS7_BIT8

Bit	R/W	Default	Description
0	RW	0x0	StartBitNomL2H_3ms7[8]

Table 10-189 STARTBITNOMH_0MS8_BIT7_0

Bit	R/W	Default	Description
7:0	RW	0x19	StartBitNomH_0ms8[7:0]

Table 10-190 STARTBITNOMH_0MS8_BIT8

Bit	R/W	Default	Description
0	RW	0x0	StartBitNomH_0ms8[8]

Table 10-191 LOGIC1NOML2H_0MS6_BIT7_0

Bit	R/W	Default	Description
7:0	RW	0x13	Logic1NomL2H_0ms6[7:0]

Table 10-192 LOGIC1NOML2H_0MS6_BIT8

Bit	R/W	Default	Description
0	RW	0x0	Logic1NomL2H_0ms6[8]

Table 10-193 LOGIC0NOML2H_1MS5_BIT7_0

Bit	R/W	Default	Description
7:0	RW	0x30	Logic0NomL2H_1ms5[7:0]

Table 10-194 LOGIC0NOML2H_1MS5_BIT8

Bit	R/W	Default	Description
0	RW	0x0	Logic0NomL2H_1ms5[8]

Amlogic Proprietary and Confidential
Copyright © Amlogic. All rights reserved.

Table 10-195 LOGIC1NOMH_1MS8_BIT7_0

Bit	R/W	Default	Description
7:0	RW	0x3a	Logic1NomH_1ms8[7:0]

Table 10-196 LOGIC1NOMH_1MS8_BIT8

Bit	R/W	Default	Description
0	RW	0x0	Logic1NomH_1ms8[8]

Table 10-197 LOGIC0NOMH_0MS9_BIT7_0

Bit	R/W	Default	Description
7:0	RW	0x1d	Logic0NomH_0ms9[7:0]

Table 10-198 LOGIC0NOMH_0MS9_BIT8

Bit	R/W	Default	Description
0	RW	0x0	Logic0NomH_0ms9[8]

Table 10-199 LOGICERRLOW_3MS6_BIT7_0

Bit	R/W	Default	Description
7:0	RW	0x75	LogicErrLow_3ms6[7:0]

Table 10-200 LOGICERRLOW_3MS6_BIT8

Bit	R/W	Default	Description
0	RW	0x0	LogicErrLow_3ms6[8]

Table 10-201 CHKCONTENTION_0MS1

Bit	R/W	Default	Description
3:0	RW	0x3	ChkContention_0ms1[7:0]

Table 10-202 PREPARENXTBIT_0MS05_BIT7_0

Bit	R/W	Default	Description
7:0	RW	0x05	PrepareNxtBit_0ms05[7:0]

Amlogic Proprietary and Confidential
Copyright © Amlogic. All rights reserved.

Table 10-203 PREPARENXTBIT_0MS05_BIT8

Bit	R/W	Default	Description
0	RW	0x0	PrepareNxtBit_0ms05[8]

Table 10-204 NOMSMPACKPOINT_0MS45

Bit	R/W	Default	Description
7:0	RW	0x0f	NomSmpAckPoint_0ms45[7:0]

Table 10-205 ACK0NOML2H_1MS5_BIT7_0

Bit	R/W	Default	Description
7:0	RW	0x2c	Ack0NomL2H_1ms5[7:0]

Table 10-206 ACK0NOML2H_1MS5_BIT8

Bit	R/W	Default	Description
0	RW	0x0	Ack0NomL2H_1ms5[8]

Table 10-207 BUGFIX_DISABLE_0

Bit	R/W	Default	Description
7	RW	0	Bug H: In special case it send a msg with initiator_addr=follower_addr, it should not consider itself a follower, as it should know itself being the sender. 0=Apply the fix. 1=Disable the fix. Original behavior.
6	RW	0	Bug G: At start bit, cec_rx_monitor's should also check cec_data_out when deciding whether the current transaction it is initiated by itself or not. 0=Apply the fix. 1=Disable the fix. Original behavior.
5	RW	0	Bug G: cec_tx_frame_composer only update broadcast_msg during IDLE, would cause it to be incorrect if the follower_adr is updated outside the IDLE period. 0=Apply the fix. 1=Disable the fix. Original behavior.
4	RW	1	Bug E: Line error handling. Before it knows it is a follower, it does not detect line error. The probably is correct behavior. But I make it an option to detect line error, even before it knows to be a follower. However, this bit is default to be 1, as it is likely not to be a bug. 0=Apply the fix. 1=Disable the fix. Original behavior.
3	RW	0	Bug D: cec_tx_signal_free_time_ctrl use (bit_start&last_bit) to start counting for observing free time rule. But bit_start is too wide, (it basically is the inversion of the cec_data_in with the exception of start_bit). And last_bit straddles from the previous bit's sampling point to current bit's sampling point. If the previous CEC bit is logic0, then bit_start for this previous CEC bit is extra wide that it also makes (bit_start&last_bit) condition to true, it shifts the free time counter start point, thus making free time in-accurate. 0=Apply the fix. 1=Disable the fix. Original behavior.
2	RW	0	Bug C: cec_tx_timing_ctrl's status signal msg_tx. If previous transmit has failed, the status should be TX_ERROR. However, a transaction on CEC line will

Amlogic Proprietary and Confidential
Copyright © Amlogic. All rights reserved.

Bit	R/W	Default	Description
			change this status to TX_DONE, even if the transaction does not involve our CEC. So if we don't read this status fast enough, we may not safely know whether the last transmit was successful or not. 0=Apply the fix. 1=Disable the fix. Original behavior.
1	RW	0	Bug B: cec_rx_ser2par's couldn't differentiate the two scenarios as below: 1. a new message following previous message that it is not a follower; 2. subsequent message bytes within a message that it is a follower. So for scenario 1, it treats it as subsequent bytes of the previous message, so it will not update follower address field, therefore won't recognize that itself is to be the follower, so it will not ACK to the sender.. 0=Apply the fix. 1=Disable the fix. Original behavior.
0	RW	0	Bug A: cec_rx_monitor's should also check cec_data_out when deciding whether the current transactionit is initiated by itself or not. 0=Apply the fix. 1=Disable the fix. Original behavior.

Table 10-208 BUGFIX_DISABLE_1

Bit	R/W	Default	Description
7:0	RW	0x0	Reserved.

Table 10-209 RX_MSG_HEADER

Bit	R/W	Default	Description
7:4	R	0x0	RX msg Initiator address.
3:0	R	0x0	RX msg Follower address.

Table 10-210 RX_MSG_OPCODE

Bit	R/W	Default	Description
7:0	R	0x0	RX msg Op-code.

Table 10-211 RX_MSG_OP1 - RX_MSG_OP14

Bit	R/W	Default	Description
7:0	R	0x0	RX msg 1st – 14th operand.

Table 10-212 RX_MSG_LENGTH

Bit	R/W	Default	Description
3:0	R	0x0	Length in bytes of Rx msg. Excluding Header byte.

Amlogic Proprietary and Confidential
Copyright © Amlogic. All rights reserved.

Table 10-213 RX_MSG_STATUS

Bit	R/W	Default	Description
1:0	R	0x0	Status of the received message. 0=RX_IDLE. No transaction. 2=RX_DONE. Message has been received successfully. 1,3=Reserved.

Table 10-214 RX_NUM_MSG

Bit	R/W	Default	Description
3:0	R	0x0	Number of received messages in Rx buffer.

Table 10-215 TX_MSG_STATUS

Bit	R/W	Default	Description
1:0	R	0x0	Status of the transmitted message. 0=TX_IDLE. No transaction. 1=TX_BUSY. Transmitter is busy. 2=TX_DONE. Message has been successfully transmitted. 3=TX_ERROR. Message has been transmitted with error.

Table 10-216 STAT_0_0

Bit	R/W	Default	Description
7	R	0x0	rx_msg_status[0]. rx_msg_status[1:0]: 0=RX_IDLE. No transaction. 2=RX_DONE. Message has been received successfully. 1,3=Reserved.
6:4	R	0x0	cec_ifc_rx_state. 0=IDLE. Idle state when reset. 1=WAIT4DATA_VALID. Send Rx buffer write enable. 2=SEND_WRITE_BUF.Send Rx buffer write enable. 3=WAIT4NXT_BYTE. Wait for the next byte to be received. 4=WAIT4SEND_NXT_BYTE. Wait for Tx_frame_composer to request for the next byte. 5=SEND_NXT_BYTE. Send the next byte of the message. 6=WAIT4END_OF_MSG. Wait for the whole message to be received. 7=WAIT4BUF_NOT_FULL.Wait for the Rx buffer to become not full.
3:2	R	0x0	rx_msg_rd_state. 0= IDLE_RD. Idle state when reset and when buffer empty. 1=READ_CUR_MSG. The host is reading the current message. 2=WAIT4NXT_READ. Wait for the next read. 3=Reserved.
1:0	R	0x0	rx_msg_wr_state. 0= IDLE_WR. Idle state when reset and when buffer empty. 1=WRITE_CUR_BYTE. Write to current buffer. 2=WAIT4NXT_WRITE. Wait for the next write. 3=WAIT4NXT_MSG. Current message was received, wait for next message.

Amlogic Proprietary and Confidential
Copyright © Amlogic. All rights reserved.

Table 10-217 STAT_0_1

Bit	R/W	Default	Description
7	R	0x0	cec_ifc_tx_state[0]. cec_ifc_tx_state[2:0]: 0=IDLE. Idle state when reset. 1=SEND_ACK_GET_MSG. Send acknowledge to get_msg signal. 2=GET_HEADER. Get message header. 3=WAIT4SEND_NXT_BYTE. Wait for Tx_frame_composer to request for the next byte. 4=SEND_NXT_BYTE. Send the next byte of the message. 5=SEND_DIN_ENB. Send din_enb signal. 6=WAIT4SEND_LAST_BYTE. Send next FIFO read enable. 7=RETRANSMIT_MSG. Wait for retransmit_message low.
6:5	R	0x0	msg_status_tx_cec. 0=TX_IDLE. No transaction. 1=Reserved. 3=TX_DONE. Message has been successfully transmitted. 4=TX_ERROR. Message has been transmitted with error.
4	R	0x0	tx_msg_buf_state. 0=IDLE. Idle state when reset and when buffer empty. 1=TX_ON_GOING. The data is kept in the buffer during the transmission.
3:1	R	0x0	host_ifc_rx_state. 0=IDLE. Idle state when reset. 1=WAIT4_HOST_ACK. A message was written in the Rx buffer and the host has to acknowledge reading it. 2=WAIT4_HOST_NO_OP. Wait for RX_NO_OP from the host before reading the next message. 3=WAIT4NOT_RX_DONE. Wait for msg_stat_rx_buf to be not RX_DONE. 4=WAIT4ACK_RX_DIS. Wait for CEC interface to acknowledge the receive disable.
0	R	0x0	rx_msg_status[1].

Table 10-218 STAT_0_2

Bit	R/W	Default	Description
7	R	0x0	frame_compose_state[0]. frame_compose_state[3:0]: 0=IDLE. Idle state when reset. 1=SEND_REQUEST. Send request to the arbiter for transmission of a new frame. 2=SEND_START_BIT. If Tx granted tell TX_timing controller to send Start Bit. 3=WAIT4SEND_FIRST_BIT. Wait for signal send_nxt_bit from the TX_timing controller. 4=SEND_DIN_7. Send bit 7 of din bus. 5=SEND_DIN_6. Send bit 6 of din bus. 6=SEND_DIN_5. Send bit 5 of din bus. 7=SEND_DIN_4. Send bit 4 of din bus. 8=SEND_DIN_3. Send bit 3 of din bus. 9=SEND_DIN_2. Send bit 2 of din bus. 10=SEND_DIN_1. Send bit 1 of din bus. 11=SEND_DIN_0. Send bit 0 of din bus. 12=EOM_TRANSMITION. End of Message is transmitted. 13=WAIT4ACK_SEND. Wait for ACK to be sent.
6:4	R	0x0	host_ifc_tx_state. 0=IDLE. Idle state when reset. 1=SEND_SAMP_DATA. Assert samp_data signal. 2=SEND_GET_MSG . Send get_msg to CEC interface. 3=WAIT4RD_NXT_BYTE_1. Increase rd_addr every read_nxt_byte pulse and go to WAIT4RD_NXT_BYTE_0. 4=WAIT4RD_NXT_BYTE_0. If rd_addr_r = msg_length go to WAIT4TX_DONE. 5=WAIT4TX_DONE . Wait for TX_DONE and go to IDLE.

Amlogic Proprietary and Confidential
Copyright © Amlogic. All rights reserved.

Bit	R/W	Default	Description
			6=SEND_ABORT. Send abort to CEC interface. 7=CHECK_TX_NO_OP. Wait for TX_NO_OP command from the host.
3:2	R	0x0	tx_msg_status. 0=TX_IDLE. No transaction. 1=TX_BUSY. Transmitter is busy. 2=TX_DONE. Message has been successfully transmitted. 3=TX_ERROR. Message has been transmitted with error.
1:0	R	0x0	cec_ifc_tx_state[2:1].

Table 10-219 STAT_0_3

Bit	R/W	Default	Description
7:6	R	0x0	signal_free_time_state. 0=IDLE. Idle state when reset. 1=FREE_TIME_MEASURE. Start measuring the Signal Free Time. 2=FREE_TIME_MEASURE_END. Wait for end_free_time_req signal.
5:3	R	0x0	tx_arbiter_state. 0=IDLE. Idle state when reset. 1=CHECK_SIGNAL_FREE_TIME. Send request to the arbiter for transmission of a new frame. 2=GRANT_TRANSMITION. If Tx granted tell TX_timing controller to send Start Bit. 3=ABORT_TRANSMITION. If there is a contention on CEC bus abort transmission. 4=END_ARBITRATION. Current device got control of the CEC bus as an initiator.
2:0	R	0x0	frame_compose_state[3:1].

Amlogic Proprietary and Confidential
Copyright © Amlogic. All rights reserved.

Table 10-220 STAT_1_0

Bit	R/W	Default	Description
7:6	R	0x0	ack_send_state[1:0]. ack_send_state[2:0]: 0=IDLE_ACK. Idle state when reset. 1=SEND_ACK_LOW. Put the CEC bus on low impedance for a '0', ACK transmission. 2=SEND_ACK_HIGH. Put the CEC bus on high impedance for a '0', ACK transmission. 3=CHECK_LINE_ERROR. Check send_line_error signal again. 4=SEND_LINE_ERROR. Put the CEC bus on low impedance for 3.6 ms to signalize that a CEC line error occurred.
5:2	R	0x0	tx_timing_ctrl_state. 0=IDLE. Idle state when reset. 1=WAIT_FOR_GRANT. Wait for grant from the arbiter. 2=SEND_START_BIT_LOW. If Tx granted send Start Bit low. 3=SEND_START_BIT_HIGH. Start Bit high. 4=SEND_1_LOW. Put the CEC bus on low impedance for a '1' transmission. 5=SEND_0_LOW. Put the CEC bus on low impedance for a '0' transmission. 6=SEND_1_HIGH. Put the CEC bus on high impedance for a '1' transmission. 7=SEND_0_HIGH. Put the CEC bus on high impedance for a '0' transmission. 8=CHECK_ACK. Check acknowledge. 9=DATA_BLOCK_OK. Header/Data block was acknowledged, receive the next one. 10=REQUEST_RETRANSMIT. A valid frame was lost and therefore it should be re-transmitted. 11=WAIT4TX_NO_OP. Wait for host to send tx_cmd = TX_NO_OP.
1:0	R	0x0	msg_tx. 0=TX_IDLE. No transaction. 1=Reserved. 2=TX_DONE. Message has been successfully transmitted. 3=TX_ERROR. Message has been transmitted with error.

Table 10-221 STAT_1_1

Bit	R/W	Default	Description
7:6	R	0x0	rx_ser2par_state[1:0]. rx_ser2par_state[3:0]: 0=IDLE. Idle state when reset. 1=RECEIVE_EIGTH_BIT. Receive the eigth data bit. 2=RECEIVE_SEVENTH_BIT. Receive the seventh data bit. 3=RECEIVE_SIXTH_BIT. Receive the sixth data bit. 4=RECEIVE_FIFTH_BIT. Receive the fifth data bit. 5=RECEIVE_FOURTH_BIT. Receive the fourth data bit. 6=RECEIVE_THIRD_BIT. Receive the third data bit. 7=RECEIVE_SECOND_BIT. Receive the second data bit. 8=RECEIVE_FIRST_BIT. Receive the first data bit. 9=RECEIVE_EOM_BIT. Receive the EOM bit. 10=RECEIVE_ACK_BIT. Receive the ACK bit.
5:4	R	0x0	msg_rx. 0=RX_IDLE. No transaction. 1=RX_BUSY. Receiver is busy. 2=RX_DONE. Message has been received successfully. 3=RX_ERROR. Message has been received with error.

Amlogic Proprietary and Confidential
Copyright © Amlogic. All rights reserved.

Bit	R/W	Default	Description
3:1	R	0x0	rx_monitor_state. 0=IDLE. Idle state when reset. 1=CHECK_START_BIT_LOW. Check the start bit low period. 2=CHECK_START_BIT_HIGH. Check the start bit high period. 3=CHECK_BIT_LOW. Check data bit low period. 4=CHECK_BIT_HIGH. Check data bit high period. 5=DELAY_OUTPUT_SIGNAL. The del_cntr counter creates a desired delay for an output signal.
0	R	0x0	ack_send_state[2].

Table 10-222 STAT_1_2

Bit	R/W	Default	Description
1:0	R	0x0	rx_ser2par_state[3:2].

CEC Bit Timing Parameters

The following table lists the appropriate values to apply to the timing parameters for two scenarios, respectively.

Scenario 1, original behavior, when the internal beat rate is once per 0.01ms;

Scenario 2, when the input clock = internal beat rate = 32768Hz.

The timing parameter values apply to scenario 2 – 32768Hz by default.

Table 10-223 CEC Bit Timing Parameter Setting

Name	Scen1 100KHz	Scen2 32768Hz	Description
Quiescent_25ms[11:0]	0x9C4	0x333	No more activity, >=25 ms
StartBitMinL2H_3ms5[8:0]	0x15E	0x070	Earliest time for Start Bit L->H, 3.5 ms
StartBitMaxL2H_3ms9 [8:0]	0x186	0x07C	Latest time for Start Bit L->H, 3.9 ms
StartBitMinH_0ms6[8:0]	0x03C	0x011	Min Start Bit High pulse width, 0.6 ms
StartBitMaxH_1ms0[8:0]	0x064	0x01D	Max start Bit High pulse width, 1.0 ms
StartBitMinTotal_4ms3 [9:0]	0x1AE	0x08A	Min Start Bit total time, 4.3 ms
StartBitMaxTotal_4ms7 [9:0]	0x1D6	0x096	Max Start Bit total time, 4.7 ms
Logic1MinL2H_0ms4[8:0]	0x028	0x00A	Earliest time for logic1 L->H, T1=0.4 ms
Logic1MaxL2H_0ms8[8:0]	0x050	0x016	Latest time for logic1 L->H, T2=0.8 ms
Logic0MinL2H_1ms3[8:0]	0x082	0x027	Earliest time for logic0 L->H, T5=1.3 ms
Logic0MaxL2H_1ms7[8:0]	0x0AA	0x034	Latest time for logic0 L->H, T6=1.7 ms
LogicMinTotal_2ms05[9:0]	0x0CD	0x040	Earliest time for next bit, T7=2.05 ms
LogicMaxHigh_2ms8[8:0]	0x118	0x059	Go to IDLE if High for >=2.8 ms
LogicErrLow_3ms4[8:0]	0x154	0x06C	Assert Low time error when active, >=3.4 ms

Amlogic Proprietary and Confidential
Copyright © Amlogic. All rights reserved.

Name	Scen1 100KHz	Scen2 32768Hz	Description
NomSmpPoint_1ms05 [7:0]	0x69	0x1F	Nominal sample time, 1.05 ms
DelCntr_LogicErrLow[2:0]	0x5	0x5	Initial value for del_cntr on LogicErrLow.
DelCntr_LogicErrHigh[2:0]	0x3	0x3	Initial value for del_cntr on LogicErrHigh.
TxTime_17ms[15:0]	0x06A4	0x022C	17 ms
TxTime_2Bit[15:0]	0x01F0	0x00A2	Time for 7-5 data bit, 4.96 ms
TxTime_4Bit[15:0]	0x03D0	0x013F	Time for 7-3 data bit, 9.76 ms
StartBitNomL2H_3ms7 [8:0]	0x172	0x078	Nominal time for Start Bit L->H, 3.7 ms
StartBitNomH_0ms8[8:0]	0x050	0x019	Nominal Start Bit High pulse width, 0.8 ms
Logic1NomL2H_0ms6[8:0]	0x03C	0x013	Nominal time for logic1 L->H, 0.6 ms
Logic0NomL2H_1ms5[8:0]	0x096	0x030	Nominal time for logic0 L->H, 1.5 ms
Logic1NomH_1ms8[8:0]	0x0B4	0x03A	Nominal Logic1 High pulse width, 1.8 ms
Logic0NomH_0ms9[8:0]	0x05A	0x01D	Nominal Logic0 High pulse width, 0.9 ms
LogicErrLow_3ms6[8:0]	0x168	0x075	Assert Low time error when active, >=3.6 ms
ChkContention_0ms1[3:0]	0xA	0x3	Check for bus contention 0.1ms=100us after H
PrepareNxtBit_0ms05[8:0]	0x005	0x005	Prepare next bit, 0.05ms before end of prev H
NomSmpAckPoint_0ms45 [7:0]	0x2D	0x0F	Nominal sample time 1.05ms=0.6(Logic1NomL2H_0ms6)+0.45
Ack0NomL2H_1ms5[8:0]	0x096	0x02C	Nominal time for Ack0 L->H, 1.5 ms

10.1.6.3 CECB Registers

Register Access

Accessing CEC_B internal registers is by indirectly method through a register.

```
#define     CECB_RW_REG                         (0xfe044000 + (0x011 << 2))

void cecb_wr_only_reg (uint32_t addr, uint32_t data)
{
    uint32_t    data32;

    data32  = 0;
    data32 |= (1    << 16); // [16]     cec_reg_wr
    data32 |= (data << 8);  // [15:8]   cec_reg_wrdata
    data32 |= (addr << 0);  // [7:0]    cec_reg_addr
    Wr(CECB_RW_REG,  data32);
} /* cecb_wr_only_reg */

uint32_t cecb_rd_reg (uint32_t addr)
{
    uint32_t    data32;

    data32  = 0;
```


Amlogic Proprietary and Confidential
Copyright © Amlogic. All rights reserved.

```
    data32 |= (0     << 16); // [16]      cec_reg_wr
    data32 |= (0     << 8);  // [15:8]    cec_reg_wrdata
    data32 |= (addr << 0);   // [7:0]     cec_reg_addr
    Wr(CECB_RW_REG,  data32);

    data32 = ((Rd(CECB_RW_REG)) >> 24) & 0xff;

    return (data32);
} /* cecb_rd_reg */
```

Register Address

Addr	Name	RW	Function
0x00	CEC_CTRL	RW	CEC control.
0x01	CEC_CTRL2	RW	CEC control.
0x02	CEC_INTR_MASK	RW	Interrupt mask.
0x05	CEC_LADD_LOW	RW	Logical address.
0x06	CEC_LADD_HIGH	RW	Logical address.
0x07	CEC_TX_CNT	RW	Tx byte count.
0x08	CEC_RX_CNT	R	Rx byte count.
0x09	CEC_STAT0	R	Internal status.
0x10	CEC_TX_DATA00	RW	TX byte 0.
0x11	CEC_TX_DATA01	RW	TX byte 1.
0x12	CEC_TX_DATA02	RW	TX byte 2.
0x13	CEC_TX_DATA03	RW	TX byte 3.
0x14	CEC_TX_DATA04	RW	TX byte 4.
0x15	CEC_TX_DATA05	RW	TX byte 5.
0x16	CEC_TX_DATA06	RW	TX byte 6.
0x17	CEC_TX_DATA07	RW	TX byte 7.
0x18	CEC_TX_DATA08	RW	TX byte 8.
0x19	CEC_TX_DATA09	RW	TX byte 9.
0x1A	CEC_TX_DATA10	RW	TX byte 10.
0x1B	CEC_TX_DATA11	RW	TX byte 11.
0x1C	CEC_TX_DATA12	RW	TX byte 12.
0x1D	CEC_TX_DATA13	RW	TX byte 13.
0x1E	CEC_TX_DATA14	RW	TX byte 14.
0x1F	CEC_TX_DATA15	RW	TX byte 15.
0x20	CEC_RX_DATA00	R	RX byte 0.
0x21	CEC_RX_DATA01	R	RX byte 1.
0x22	CEC_RX_DATA02	R	RX byte 2.
0x23	CEC_RX_DATA03	R	RX byte 3.
0x24	CEC_RX_DATA04	R	RX byte 4.

Amlogic Proprietary and Confidential
Copyright © Amlogic. All rights reserved.

Addr	Name	RW	Function
0x25	CEC_RX_DATA05	R	RX byte 5.
0x26	CEC_RX_DATA06	R	RX byte 6.
0x27	CEC_RX_DATA07	R	RX byte 7.
0x28	CEC_RX_DATA08	R	RX byte 8.
0x29	CEC_RX_DATA09	R	RX byte 9.
0x2A	CEC_RX_DATA10	R	RX byte 10.
0x2B	CEC_RX_DATA11	R	RX byte 11.
0x2C	CEC_RX_DATA12	R	RX byte 12.
0x2D	CEC_RX_DATA13	R	RX byte 13.
0x2E	CEC_RX_DATA14	R	RX byte 14.
0x2F	CEC_RX_DATA15	R	RX byte 15.
0x30	CEC_LOCK_BUF	RW	CEC lock register.
0x31	CEC_WAKEUPCTRL	RW	Wakeup status.

Register Description

Table 10-224 CEC_CTRL2

Bit	R/W	Default	Description
6	RW	0	curb_err_init. Bug fix: Do not signal initiator error, when it's myself who pulled down the line when functioning as a follower.
5	RW	0	en_chk_sbitlow. Bug fix – “Receive messages are ignored and not acknowledge” – to resolve bus contention during Start bit, when Tx is sending while Rx is receiving,
4:0	RW	0	rise_del_max. To support CEC line slow rise delay. 0=Support rise delay up to 1*30.5us; 1=Support rise delay up to 2*30.5us; … N=Support rise delay up to (N+1)*30.5us.

Amlogic Proprietary and Confidential
Copyright © Amlogic. All rights reserved.

Table 10-225 CEC_STAT0

Bit	R/W	Default	Description
6:4	RW	0	p2s_state. 0=TIDLE; 1=SEND_SBIT; Send Start bit. Apply to initiator only. 2=SEND_DBIT; Send Data bit. Apply to initiator only. 3=SEND_EOM; Send End-Of-Message bit. Apply to initiator only. 4=SEND_ACK; ACK bit period. Apply to initiator only. 5=FBACK_ACK; Send ACK bit. Apply to follower only. 6=FBACK_RX_ERR. Signal line error. Apply to follower only.
3:0	R	0	s2p_status. 0x0=IDLE; 0x1=SBITLOWER; Start Bit's Low impedance period. 0x2=SBH; Start Bit's High impedance period. 0x5=L1LOWER; Data bit (logic 0 or 1), the period before one can decide if it's logic 0 or 1. 0x6=SMP1; Detected the data bit is logic 1. 0x7=SMP0; Detected the data bit is logic 0. 0x8=L0H; Logic 0 bit's High impedance period. 0x9=ERRLMIN; Detecting line error. 0xE=ERRLMAX. Line error detected.

10.2 Video Output

10.2.1 Overview

This section describes the SoC’s VPU sub-module, including RDMA sub-module, VIU sub-module, HDMITX sub-module,and MIPI_DSI sub-module.

10.2.2 VPU

VPU is display process unit, the main function is to receive data from decoder/ddr/hdmirx etc, then process the source data in order to get the high-quality video picture, and finally send out the video to the screen by HDMITX etc.

10.2.3 Register Description

10.2.3.1 VPU Registers

Register Address

- VPU_CRC_CTRL 0xff009c04
- VPU_RO_CRC0 0xff009c08
- VPU_RO_CRC1 0xff009c0c
- VPU_RO_CRC2 0xff009c10
- VPU_RO_CRC3 0xff009c14
- VPU_RO_CRC4 0xff009c18
- VPU_RO_CRC5 0xff009c1c
- VPU_RO_CRC6 0xff009c20
- VPU_INTF_CTRL0xff009c28
- VPU_APB_PROT_CTRL0xff009c2c
- VPU_ENC_ERROR0xff009c30

Amlogic Proprietary and Confidential
Copyright © Amlogic. All rights reserved.

- VPU_VDIN_PRE_ARB_CTRL0xff009c50
- VPU_VDISP_PRE_ARB_CTRL 0xff009c54
- VPU_VPUARB2_PRE_ARB_CTRL 0xff009c58
- VPU_VIU_VENC_MUX_CTRL0xff009c68
- VPU_HDMI_SETTING 0xff009c6c
- ENCI_INFO_READ 0xff009c70
- ENCP_INFO_READ 0xff009c74
- ENCT_INFO_READ 0xff009c78
- ENCL_INFO_READ 0xff009c7c
- VPU_SW_RESET 0xff009c80
- VPU_CLK_GATE 0xff009c8c
- VPU_MEM_PD_REG0 0xff009c94
- VPU_MEM_PD_REG1 0xff009c98
- VPU_HDMI_DATA_OVR0xff009c9c
- VPU_VPU_PWM_V0 0xff007380
- VPU_VPU_PWM_V1 0xff007384
- VPU_VPU_PWM_V2 0xff007388
- VPU_VPU_PWM_V3 0xff00738c
- VPU_VPU_PWM_H0 0xff007390
- VPU_VPU_PWM_H1 0xff007394
- VPU_VPU_PWM_H2 0xff007398
- VPU_VPU_PWM_H3 0xff00739c
- VPU_VPU_3D_SYNC1 0xff0073a0
- VPU_VPU_3D_SYNC2 0xff0073a4
- VPU_HDMI_FMT_CTRL0xff009d0c
- VPU_VDIN_ASYNC_HOLD_CTRL 0xff009d10
- VPU_VDISP_ASYNC_HOLD_CTRL0xff009d14
- VPU_VPUARB2_ASYNC_HOLD_CTRL 0xff009d18
- VPU_ARB_URG_CTRL 0xff009d1c
- VPU_422TO444_RST 0xff009d28
- VPU_422TO444_CTRL0 0xff009d2c
- VPU_422TO444_CTRL1 0xff009d30
- VPU_VIU_ASYNC_MASK 0xff009e04
- VPU_VDIN_MISC_CTRL 0xff009e08
- VPU_VIU_VDIN_IF_MUX_CTRL 0xff009e0c
- VPU_VIU2VDIN1_HDN_CTRL 0xff009e10
- VPU_VENCX_CLK_CTRL 0xff009e14
- VPU_RDARB_MODE_L1C1 0xff009e40
- VPU_RDARB_REQEN_SLV_L1C1 0xff009e44
- VPU_RDARB_WEIGH0_SLV_L1C10xff009e48
- VPU_RDARB_WEIGH1_SLV_L1C10xff009e4c
- VPU_WRARB_MODE_L1C1 0xff009e50
- VPU_WRARB_REQEN_SLV_L1C1 0xff009e54
- VPU_WRARB_WEIGH0_SLV_L1C10xff009e58

Amlogic Proprietary and Confidential
Copyright © Amlogic. All rights reserved.

- VPU_WRARB_WEIGH1_SLV_L1C10xff009e5c
- VPU_RDWR_ARB_STATUS_L1C1 0xff009e60
- VPU_RDARB_MODE_L1C2 0xff009e64
- VPU_RDARB_REQEN_SLV_L1C2 0xff009e68
- VPU_RDARB_WEIGH0_SLV_L1C20xff009e6c
- VPU_RDWR_ARB_STATUS_L1C2 0xff009e70
- VPU_RDARB_MODE_L2C1 0xff009e74
- VPU_RDARB_REQEN_SLV_L2C1 0xff009e78
- VPU_RDARB_WEIGH0_SLV_L2C10xff009e7c
- VPU_RDARB_WEIGH1_SLV_L2C10xff009e80
- VPU_RDWR_ARB_STATUS_L2C1 0xff009e84
- VPU_WRARB_MODE_L2C1 0xff009e88
- VPU_WRARB_REQEN_SLV_L2C1 0xff009e8c
- VPU_WRARB_WEIGH0_SLV_L2C10xff009e90
- VPU_ASYNC_RD_MODE0 0xff009e94
- VPU_ASYNC_RD_MODE1 0xff009e98
- VPU_ASYNC_RD_MODE2 0xff009e9c
- VPU_ASYNC_RD_MODE3 0xff009ea0
- VPU_ASYNC_RD_MODE4 0xff009ea4
- VPU_ASYNC_WR_MODE0 0xff009ea8
- VPU_ASYNC_WR_MODE1 0xff009eac
- VPU_ASYNC_WR_MODE2 0xff009eb0
- VPU_ASYNC_STAT 0xff009eb4
- VPU_HDMI_DITH_01_04 0xff009fc0
- VPU_HDMI_DITH_01_15 0xff009fc4
- VPU_HDMI_DITH_01_26 0xff009fc8
- VPU_HDMI_DITH_01_37 0xff009fcc
- VPU_HDMI_DITH_10_04 0xff009fd0
- VPU_HDMI_DITH_10_15 0xff009fd4
- VPU_HDMI_DITH_10_26 0xff009fd8
- VPU_HDMI_DITH_10_37 0xff009fdc
- VPU_HDMI_DITH_11_04 0xff009fe0
- VPU_HDMI_DITH_11_15 0xff009fe4
- VPU_HDMI_DITH_11_26 0xff009fe8
- VPU_HDMI_DITH_11_37 0xff009fec
- VPU_HDMI_DITH_CNTL 0xff009ff0
- VPU_VENCL_DITH_CTRL 0xff0073c0
- VPU_VENCL_DITH_LUT_1 0xff0073c4
- VPU_VENCL_DITH_LUT_2 0xff0073c8
- VPU_VENCL_DITH_LUT_3 0xff0073cc
- VPU_VENCL_DITH_LUT_4 0xff0073d0
- VPU_VENCL_DITH_LUT_5 0xff0073d4
- VPU_VENCL_DITH_LUT_6 0xff0073d8
- VPU_VENCL_DITH_LUT_7 0xff0073dc

Amlogic Proprietary and Confidential
Copyright © Amlogic. All rights reserved.

- VPU_VENCL_DITH_LUT_8 0xff0073e0
- VPU_VENCL_DITH_LUT_9 0xff0073e4
- VPU_VENCL_DITH_LUT_100xff0073e8
- VPU_VENCL_DITH_LUT_110xff0073ec
- VPU_VENCL_DITH_LUT_120xff0073f0

Register Description

Table 10-226 VPU_CRC_CTRL

Bit(s)	R/W	Default	Description
10	R/W	0	vpu axi read channel 2 bist enable
9	R/W	0	vpu axi read channel 1 bist enable
8	R/W	0	vpu axi read channel 0 bist enable
4	R/W	0	vpu axi write channel 1 crc start
3	R/W	0	vpu axi write channel 0 crc start
2	R/W	0	vpu axi read channel 2 crc start
1	R/W	0	vpu axi read channel 1 crc start
0	R/W	0	vpu axi read channel 0 crc start

Table 10-227 VPP_RO_CRC0

Bit(s)	R/W	Default	Description
31-0	R	0	vpu axi read 0 crc

Table 10-228 VPP_RO_CRC1

Bit(s)	R/W	Default	Description
31-0	R	0	vpu axi read 1 crc

Table 10-229 VPP_RO_CRC2

Bit(s)	R/W	Default	Description
31-0	R	0	vpu axi read 2 crc

Table 10-230 VPP_RO_CRC3

Bit(s)	R/W	Default	Description
31-0	R	0	vpu axi write 0 cmd crc

Table 10-231 VPP_RO_CRC4

Bit(s)	R/W	Default	Description
31-0	R	0	vpu axi write 0 data crc

Amlogic Proprietary and Confidential
Copyright © Amlogic. All rights reserved.

Table 10-232 VPP_RO_CRC5

Bit(s)	R/W	Default	Description
31-0	R	0	vpu axi write 1 cmd crc

Table 10-233 VPP_RO_CRC6

Bit(s)	R/W	Default	Description
31-0	R	0	vpu axi write 1 data crc

Table 10-234 VPP_INTF_CTRL

Bit(s)	R/W	Default	Description
18	R/W	1	vpu axi write 1 enable
17	R/W	0	vpu axi write 1 gate clock auto
16	R/W	0	vpu axi write 1 disable clock
14	R/W	1	vpu axi write 0 enable
13	R/W	0	vpu axi write 0 gate clock auto
12	R/W	0	vpu axi write 0 disable clock
10	R/W	1	vpu axi read 2 enable
9	R/W	0	vpu axi read 2 gate clock auto
8	R/W	0	vpu axi read 2 disable clock
6	R/W	1	vpu axi read 1 enable
5	R/W	0	vpu axi read 1 gate clock auto
4	R/W	0	vpu axi read 1 disable clock
2	R/W	1	vpu axi read 0 enable
1	R/W	0	vpu axi read 0 gate clock auto
0	R/W	0	vpu axi read 0 disable clock

Table 10-235 VPP_APB_PROT_CTRL

Bit(s)	R/W	Default	Description
21-2	R/W	0	hold number
1	R/W	0	protect enable
0	R/W	0	soft reset

Amlogic Proprietary and Confidential
Copyright © Amlogic. All rights reserved.

Table 10-236 VPP_ENC_ERROR

Bit(s)	R/W	Default	Description
31-24	R	0	RO enci error count
23-16	R	0	RO encp error count
15-8	R	0	RO encl error count
2	R/W	1	encl afifo error count enable
1	R/W	1	encp afifo error count enable
0	R/W	1	enci afifo error count enable

Table 10-237 VPU_VDIN_PRE_ARB_CTRL

Bit(s)	R/W	Default	Description
31	R/W	0	VDIN_PREARB_SOFT_RESET: 1=SW reset vdin_mmc_pre_arb.
30-18	R	0	Reserved.
17	R/W	1	VDIN_ACG_EN: 1=Enable auto-clock gating of vdin_mmc_pre_arb.
16	R/W	0	VDIN_DISABLE_CLK: 1=Disalbe the clock to vdin_mmc_pre_arb.
15-0	R/W	0xffff	VDIN_REQ_EN: vdin_mmc_pre_arb request enable.

Table 10-238 VPU_VDISP_PRE_ARB_CTRL

Bit(s)	R/W	Default	Description
31	R/W	0	VDISP_PREARB_SOFT_RESET: 1=SW reset vdisp_mmc_pre_arb.
30-18	R	0	Reserved.
17	R/W	1	VDISP_ACG_EN: 1=Enable auto-clock gating of vdisp_mmc_pre_arb.
16	R/W	0	VDISP_DISABLE_CLK: 1=Disalbe the clock to vdisp_mmc_pre_arb.
15-0	R/W	0xffff	VDISP_REQ_EN: vdisp_mmc_pre_arb request enable.

Table 10-239 VPU_VPUARB2_PRE_ARB_CTRL

Bit(s)	R/W	Default	Description
31	R/W	0	VPUARB2_PREARB_SOFT_RESET: 1=SW reset vpuarb2_mmc_pre_arb.
30-18	R	0	Reserved.
17	R/W	1	VPUARB2_ACG_EN: 1=Enable auto-clock gating of vpuarb2_mmc_pre_arb.
16	R/W	0	VPUARB2_DISABLE_CLK: 1=Disalbe the clock to vpuarb2_mmc_pre_arb.
15-0	R/W	0xffff	VPUARB2_REQ_EN: vpuarb2_mmc_pre_arb request enable.

Amlogic Proprietary and Confidential
Copyright © Amlogic. All rights reserved.

Table 10-240 VPU_VIU_VENC_MUX_CTRL

Bit(s)	R/W	Default	Description
20	R/W	0	Viu_sync_mode_en 1:Viu_sync_mode_en enable// ENCL/P/I vsync send to both viu1 and viu2 Bit[1:0] select data fbetween viu1 and ENCL/P/I Bit[5:4] select ctrl singal(vsync) between ENCL/P/I and viu1. Bit[3:2] select data and vsync between viu2 and ENCL/P/I 0:Viu_sync_mode_en disable// Bit[1:0] select data and vsync fbetween viu1 and ENCL/P/IBit[3:2] select data and vsync between viu2 and ENCL/P/IBit[5:4] unuse
17-16	W	0	RASP DPI CLOCK SEL : 00 : cph1 01 : cph2 10/11 : cph3
15:6	W	0	reserved
5-4			VIU1_SEL_VENC_CTRL: Select which one of the encl/P/T/L control singal that Viu1 connects to when viu_sync_model enable.unuse when viu_sync_model disable. 0: ENCL 1: ENCI 2: ENCP 3: ENCT
3-2	R/W	0	VIU2_SEL_VENC: Select which one of the encl/P/T/L that Viu2 connects to (both vsync and data). 0: ENCL 1: ENCI 2: ENCP 3: ENCT
1-0	R/W	0	VIU1_SEL_VENC: Select which one of the encl/P/T/L that Viu1 connects to. Only select data when viu_sync_model enable,select both data and vsync when viu_sync_model disable, 0: ENCL 1: ENCI 2: ENCP 3: ENCT

Table 10-241 VPU_HDMI_SETTING

Bit(s)	R/W	Default	Description
15-12	R/W	0	RD_RATE: Read rate to the async FIFO between VENC and HDMI. 0: One read every rd_clk 1: One read every 2 rd_clk 2: One read every 3 rd_clk … 15: One read every 16 rd_clk
11-8	R/W	0	WR_RATE: Write rate to the async FIFO between VENC and HDMI. 0: One write every wr_clk 1: One write every 2 wr_clk 2: One write every 3 wr_clk … 15: One write every 16 wr_clk
7-5	R/W	0	DATA_COMP_MAP: Input data is CrYCr(BRG), map the output data to desired format: 0: output CrYCb (BRG) 1: output YCbCr (RGB) 2: output YCrCb (RBG) 3: output CbCrY (GBR) 4: output CbYCr (GRB) 5: output CrCbY (BGR) 6,7: Reserved

Amlogic Proprietary and Confidential
Copyright © Amlogic. All rights reserved.

Bit(s)	R/W	Default	Description
4	R/W	0	INV_DVI_CLK: If true, invert the polarity of clock output to external DVI interface. (NOT internal HDMI).
3	R/W	0	INV_VSYNC: If true, invert the polarity of VSYNC input from VENC
2	R/W	0	INV_HSYNC: If true, invert the polarity of HSYNC input from VENC
1-0	R/W	0	SRC_SEL: Select which HDMI source from between ENCI and ENCP. 2'b00: Disable HDMI source 2'b01: Select ENCI data to HDMI 2'b10: Select ENCP data to HDMI

Table 10-242 ENCI_INFO_READ

Bit(s)	R/W	Default	Description
31-29	R	0	Current ENCI field status.
28-25	R	0	Reserved
24-16	R	0	Current ENCI line counter status.
15-11	R	0	Reserved
10-0	R	0	Current ENCI pixel counter status.

Table 10-243 ENCP_INFO_READ

Bit(s)	R/W	Default	Description
31-29	R	0	Current ENCP field status.
28-16	R	0	Current ENCP line counter status.
15-13	R	0	Reserved
12-0	R	0	Current ENCP pixel counter status.

Table 10-244 ENCT_INFO_READ

Bit(s)	R/W	Default	Description
31-29	R	0	Current ENCT field status.
28-16	R	0	Current ENCT line counter status.
15-13	R	0	Reserved
12-0	R	0	Current ENCT pixel counter status.

Table 10-245 ENCL_INFO_READ

Bit(s)	R/W	Default	Description
31-29	R	0	Current ENCL field status.
28-16	R	0	Current ENCL line counter status.
15-13	R	0	Reserved
12-0	R	0	Current ENCL pixel counter status.

Amlogic Proprietary and Confidential
Copyright © Amlogic. All rights reserved.

Table 10-246 VPU_SW_RESET

Bit(s)	R/W	Default	Description
3	R/W	0	vpuarb2_mmc_arb_rst_n
2	R/W	0	vdisp_mmc_arb_rst_n
1	R/W	0	vdin_mmc_arb_rst_n
0	R/W	0	viu_rst_n

Table 10-247 VPU_D2D3_MMC_CTRL

Bit(s)	R/W	Default	Description
30	R/W	0	d2d3_depr_req_sel, 0:vdisp_pre_arb, 1: vpuarb2_pre_arb
27-22	R/W	0x3f	d2d3_depr_brst_num
21-16	R/W	0x2d	d2d3_depr_id
14	R/W	0x0	d2d3_depw_req_sel, 0: vdin_pre_arb, 1: vdisp_pre_arb
11-6	R/W	0x3f	d2d3_depw_brst_num
5-0	R/W	0x2e	d2d3_depw_id

Table 10-248 VPU_CONT_MMC_CTRL

Bit(s)	R/W	Default	Description
30	R/W	0x0	mtn_contrd_req_sel, 0:vdisp_post_arb, 1: vpuarb2_pre_arb
27-22	R/W	0x3f	mtn_contrd_brst_num
21-16	R/W	0x2b	mtn_contrd_id
14	R/W	0x0	mtn_contwr_req_sel, 0: vdisp_post_arb, 1: vpuarb2_pre_arb
11-6	R/W	0x3f	mtn_contwr_brst_num
5-0	R/W	0x2c	mtn_contwr_id

Table 10-249 VPU_CLK_GATE

Bit(s)	R/W	Default	Description
30-18	R/W	0x0	Reserved
17	R/W	0x1	Clk_b control register no latch
16	R/W	0x1	Clk_vib enable
15	R/W	0x1	Gvapbclk enable
14	R/W	0x1	Clk mpeg vlock enable
13	R/W	0x1	Reserved
12	R/W	0x1	Venc_dac_process_clk enable
11	R/W	0x1	Venc_i_top enable
10	R/W	0x1	Venci_int enable

Amlogic Proprietary and Confidential
Copyright © Amlogic. All rights reserved.

Bit(s)	R/W	Default	Description
9:8	R/W	0x11	Clk_vib latch sync source select 00: di2ldim_go_field, 01: post_frame_rst;10: pre_frame_rst, 11:viu_go_field
7	R/W	0x1	Reserved
6	R/W	0x1	Vpu_misc_clk enable
5	R/W	0x1	Venc_l_top enable
4	R/W	0x1	Venc_l_int enable
3	R/W	0x1	Venc_p_int enable
2	R/W	0x1	Reserved
1	R/W	0x1	Vi_top clock enable
0	R/W	0x1	Venc_p_top enable

Table 10-250 VPU_HDMI_DATA_OVR

Bit(s)	R/W	Default	Description
31	R/W	0	DATA_OVR_EN: Control if override HDMI input data with DATA_OVR[29:0], for display e.g. black or blue screen. 0: No override 1: Enable override
30	R	0	Security override
29-0	R/W	0	DATA_OVR: programmable pixel data value for override.

Table 10-251 VPU_VPU_PWM_V0

Bit(s)	R/W	Default	Description
31	R/W	0	reg_vpu_pwm_inv, 1: invert the pwm signal, active low
30-29	R/W	0	reg_vpu_pwm_src_sel, 00: encl, enct, encp
28-16	R/W	0	reg_vpu_pwm_v_end0
15-14	R/W	0	reg_vpu_pwm_setting_latch_mode
13	R/W	1	reg_vpu_pwm_vs_inv
12-0	R/W	0	reg_vpu_pwm_v_start0

Table 10-252 VPU_VPU_PWM_V1

Bit(s)	R/W	Default	Description
28-16	R/W	0	reg_vpu_pwm_v_end1
12-0	R/W	0	reg_vpu_pwm_v_start1

Amlogic Proprietary and Confidential
Copyright © Amlogic. All rights reserved.

Table 10-253 VPU_VPU_PWM_V2

Bit(s)	R/W	Default	Description
28-16	R/W	0	reg_vpu_pwm_v_end2
12-0	R/W	0	reg_vpu_pwm_v_start2

Table 10-254 VPU_VPU_PWM_V3

Bit(s)	R/W	Default	Description
28-16	R/W	0	reg_vpu_pwm_v_end3
12-0	R/W	0	reg_vpu_pwm_v_start3

Table 10-255 VPU_VPU_PWM_H0

Bit(s)	R/W	Default	Description
28-16	R/W	0	reg_vpu_pwm_h_end0
12-0	R/W	0	reg_vpu_pwm_h_start0

Table 10-256 VPU_VPU_PWM_H1

Bit(s)	R/W	Default	Description
28-16	R/W	0	reg_vpu_pwm_h_end1
12-0	R/W	0	reg_vpu_pwm_h_start1

Table 10-257 VPU_VPU_PWM_H2

Bit(s)	R/W	Default	Description
28-16	R/W	0	reg_vpu_pwm_h_end2
12-0	R/W	0	reg_vpu_pwm_h_start2

Table 10-258 VPU_VPU_PWM_H3

Bit(s)	R/W	Default	Description
28-16	R/W	0	reg_vpu_pwm_h_end3
12-0	R/W	0	reg_vpu_pwm_h_start3

Table 10-259 VPU_VPU_3D_SYNC1

Bit(s)	R/W	Default	Description
31	R/W	0	reg_3dsync_enable, 1: enable 3d sync output
30	R/W	0	3dsync setting vsync latch
29	R/W	0	3dsync go high field polarity: 1, go high while field[0]=1

Amlogic Proprietary and Confidential
Copyright © Amlogic. All rights reserved.

Bit(s)	R/W	Default	Description
28-16	R/W	0	reg_3dsync_v_end0
15	R/W	0	3dsync out inv
14	R/W	0	3dsync vbo out inv
13	R/W	1	Vbo 3d en, to v by one, 3d enable
12-0	R/W	0	reg_3dsync_v_start0

Table 10-260 VPU_VPU_3D_SYNC2

Bit(s)	R/W	Default	Description
31	R/W	0	Reg_3dsync_field_bit_sel: 1. Keep 3dsync not changed for two fields, i.e. L-L-R-R-L-L-R-R (11001100) 0. Change 3dsync every field i.e. L-R-L-R (1010)
28-16	R/W	0	reg_3dsync_h_end
12-0	R/W	0	reg_3dsync_h_start

Table 10-261 VPU_HDMI_FMT_CTRL

12 bit to 10 bit dither control register. 10 bit to 8 bit see VPU_HDMI_DITH_CNTL

Bit(s)	R/W	Default	Description
21-19	R/W	0	frame count offset for B
18-16	R/W	0	frame count offset for G
15	R/W	0	hcnt hold when de valid
14	R/W	0	RGB frame count separate
13	R/W	0	dith4x4 : frame random enable
12	R/W	0	dith4x4 enable
11	R/W	0	tunnel enable for DOLBY
10	R/W	0	rounding enable
9-6	R/W	0	Cntl_hdmi_dith10 :
5	R/W	0	Cntl_hdmi_dith_md:
4	R/W	0	Cntl_hdmi_dith_en: dither 10-b to 8-b enable
3-2	R/W	0	Cntl_chroma_dnsmp: Chroma down sample mode when convert to 422 or 420. 0 = use pixel 0; 1 = use pixel 1; 2 = use average;
1-0	R/W	0	Cntl_hdmi_vid_fmt: Control whether to convert ENCP's 444 data to 422 or 420 0 = No conversion; 1 = Convert to 422; 2 = Convert to 420;

Amlogic Proprietary and Confidential
Copyright © Amlogic. All rights reserved.

Table 10-262 VPU_VDIN_ASYNC_HOLD_CTRL

Bit(s)	R/W	Default	Description
31-24	R/W	‘h18	Wr_hold_num
23-16	R/W	‘h10	Wr_rel_num
15-8	R/W	‘h18	Rd_hold_num
7-0	R/W	‘h10	Rd_rel_num

Table 10-263 VPU_VDISP_ASYNC_HOLD_CTRL

Bit(s)	R/W	Default	Description
31-24	R/W	‘h18	Wr_hold_num
23-16	R/W	‘h10	Wr_rel_num
15-8	R/W	‘h18	Rd_hold_num
7-0	R/W	‘h10	Rd_rel_num

Table 10-264 VPU_VPUARB2_ASYNC_HOLD_CTRL

Bit(s)	R/W	Default	Description
31-24	R/W	‘h18	Wr_hold_num
23-16	R/W	‘h10	Wr_rel_num
15-8	R/W	‘h18	Rd_hold_num
7-0	R/W	‘h10	Rd_rel_num

Table 10-265 VPU_ARB_URG_CTRL

Bit(s)	R/W	Default	Description
11	R/W	0	Rdma_ddr_reg_busy to vpuarb2_urg_ctrl
10	R/W	0	Rdma_ddr_reg_busy to vdisp_urg_ctrl
9	R/W	0	Rdma_ddr_reg_busy to vdin_urg_ctrl
8	R/W	0	Vdin1_lff_urg_ctrl to vpuarb2_urg_ctrl
7	R/W	0	Vdin0_lff_urg_ctrl to vpuarb2_urg_ctrl
6	R/W	0	Vpp_off_urg_ctrl to vpuarb2_urg_ctrl
5	R/W	0	Vdin1_lff_urg_ctrl to vdisp_urg_ctrl
4	R/W	0	Vdin0_lff_urg_ctrl to vdisp_urg_ctrl
3	R/W	0	Vpp_off_urg_ctrl to vdisp_urg_ctrl
2	R/W	0	Vdin1_lff_urg_ctrl to vdin_urg_ctrl
1	R/W	0	Vdin0_lff_urg_ctrl to vdin_urg_ctrl
0	R/W	0	Vpp_off_urg_ctrl to vdin_urg_ctrl

Amlogic Proprietary and Confidential
Copyright © Amlogic. All rights reserved.

Table 10-266 VPU_422TO444_RST

Bit(s)	R/W	Default	Description
3	R/W	0	Change output of viu_12bit422to10bit444_vd1 to 10bits 1:cut high 2 bits 0:cut low 2 bits
2	R/W	0	Change output of viu_12bit422to10bit444_encp to 10bits 1:cut high 2 bits 0:cut low 2 bits
1	R/W	0	Soft rst enable of viu_12bit422to10bit444_vd1 module active high
0	R/W	0	Soft rst enable of viu_12bit422to10bit444_encp module active high

Table 10-267 VPU_422TO444_CTRL0

Bit(s)	R/W	Default	Description
31	R/W	0	bypass_mode : active high if this bit set high ,viu_12bit422to10bit444_encp work in bypass mode, dout = din
30	/	/	reversed
29	R/W	0	clip10_mode: active high if this bit set high ,viu_12bit422to10bit444_encp work clip10_mode ,output high 10bits value of din and clip data to 10bit,then expand to 12bits according clip_ lend.
28	R/W	0	Clip8_mode: active high if this bit set high ,viu_12bit422to10bit444_encp work clip8_mode ,output high 8bits value of din and clip data to 8bit,then expand to 12bits according clip_lend.
27	R/W	0	clip_lend :active high make output data to 12bits in clip10_mode/clip8_mode/scramble 1;expand bits in high bits 0: ;expand bits low bits
26	R/W	0	scramble_mode :active high viu_12bit422to10bit444_encp module get luma and chroma from 422 format data erery pixel ,then reorginize data to 8bits according to reg_tunnel value(this model can change data from 422 to 444??). Luma = din[35:24] Chroma =odd_pixel?din[23:12]:din[11:0]
25	R/W	0	go_field_en 1:rst odd_pixel to 0 when go_filed come
24	R/W	0	go_line_en1:rst rst odd_pixel to 0 when go_line come
23	R/W	0	oft_rst_en 1:soft rst rst odd_pixel to 0
22	R/W	0	de_sel : input data de singal 1:chose encp require singal as de 0:close this module
17:15	R/W	0	reg_tunnel_sel_b1 : select high 4 bits for B from {luma,chroma} ,only work in scramble mode: 0:bit[3:0] 1:bit[7:3] 2:bit[11:8] 3:bit[15:12] 4:bit[19:16] 5:bit[23:20] Default:bit[23:20]
14:12	R/W	0	reg_tunnel_sel_g1 : select high 4 bits for G from {luma,chroma} ,only work in scramble mode: 0:bit[3:0] 1:bit[7:3] 2:bit[11:8] 3:bit[15:12]

Amlogic Proprietary and Confidential
Copyright © Amlogic. All rights reserved.

Bit(s)	R/W	Default	Description
			4:bit[19:16] 5:bit[23:20] Default:bit[23:20]
11:9	R/W	0	reg_tunnel_sel_r1 : select high 4 bits for R from {luma,chroma} ,only work in scramble mode: 0:bit[3:0] 1:bit[7:3] 2:bit[11:8] 3:bit[15:12] 4:bit[19:16] 5:bit[23:20] Default:bit[23:20]
8:6	R/W	0	reg_tunnel_sel_B0 : select low 4 bits for B from {luma,chroma} ,only work in scramble mode: 0:bit[3:0] 1:bit[7:3] 2:bit[11:8] 3:bit[15:12] 4:bit[19:16] 5:bit[23:20] Default:bit[23:20]
5:3	R/W	0	reg_tunnel_sel_g0 : select low 4 bits for G from {luma,chroma} ,only work in scramble mode: 0:bit[3:0] 1:bit[7:3] 2:bit[11:8] 3:bit[15:12] 4:bit[19:16] 5:bit[23:20] Default:bit[23:20]
2:0	R/W	0	reg_tunnel_sel_r0 : select low 4 bits for R from {luma,chroma} ,only work in scramble mode: 0:bit[3:0] 1:bit[7:3] 2:bit[11:8] 3:bit[15:12] 4:bit[19:16] 5:bit[23:20] Default:bit[23:20]

Table 10-268 VPU_422TO444_CTRL1

Bit(s)	R/W	Default	Description
20	R/W	0	software reset
19-18	R/W	0	reg_viu2vdin_dn_ratio: down-scale ratio: 0->no scale; 1-> 1/2; 2->1/4; 3->reserved
17-16	R/W	0	reg_viu2vdin_flt_mode: filter mode; 0->no filter; 1->[0 2 2 0]/4; 2->[1 1 1 1]/4; 3->[1 3 3 1]/8
15-14	R/W	0	reserved
13-0	R/W	0	reg_viu2vdin_hsize: source horizontal size

Amlogic Proprietary and Confidential
Copyright © Amlogic. All rights reserved.

Table 10-269 VPU_VIU_ASYNC_MASK

Bit(s)	R/W	Default	Description
31:28	R/W	0	reserved
27:24	R/W	0	VDIN_STTs_data => VPP
23:20	R/W	0	Nr/di -> ldim
19-18	R/W	0	reg_viu2vdin_dn_ratio: down-scale ratio: 0->no scale; 1-> 1/2; 2->1/4; 3->reserved
11:8	R/W	0	Vpp afbc-> di pre inp
7:4	R/W	0	Mask vd1-> di post input
3:0	R/W	0	Mask di post => VPP_VD1_IN

Table 10-270 VPU_VDIN_MISC_CTRL

Bit(s)	R/W	Default	Description
31:26	R/W	0	reserved
25-24	R/W	0	afbce gate clock ctrl
23	R/W	0	afbce_go_field & afbce_go_line select : 0:vdin 1:di
22	R/W	0	vdin_go_field & vdin_go_line select : 0:vdin0 1:vdin1
21	R/W	0	vdin0 output to afbc enc
20	R/W	0	vdin0 output to write mif
19	R/W	0	vdin0 output to mif enable
18	R/W	0	vdin1 output to afbc enc
17	R/W	0	vdin1 output to write mif
16	R/W	0	vdin1 output to mif enable
15	R/W	0	vdin line int enable
14-11	R/W	0	vdin arbiter gate clock ctrl
10	R/W	0	ldim stts data select : 0: vdin01:vdin1
9-8	R/W	0	vdin1 write mif fix disable
7-6	R/W	0	vdin0 write mif fix disable
4	R/W	0	Vdin1_wr_rst_n
3	R/W	0	Vdin0_wr_rst_n
2	R/W	0	Nrin_mux_wr_rst_n
1	R/W	0	Vdin1_rst_n
0	R/W	0	Vdin0_rst_n

Amlogic Proprietary and Confidential
Copyright © Amlogic. All rights reserved.

Table 10-271 VPU_VIU_VDIN_IF_MUX_CTRL

Bit(s)	R/W	Default	Description
28-24	R/W	0	//Select VIU to “VDIN0/VDIN1 source 9” data path , must clear it first before changing the path sel //5’b00000= Disable VIU to VDIN path //5’b00001= Enble VIU of ENC_I domain to VDIN //5’b00010= Enble VIU of ENC_P domain to VDIN //5’b00100= Enble VIU of ENC_T domain to VDIN //5’b01000= Enble VIU WriteBack 1 domain to VDIN //5’b10000= Enble VIU WriteBack 2 domain to VDIN
20-16	R/W	0	//Select VIU Clock to “VDIN0/VDIN1 source 9” clk path , must clear it first before changing the path sel //5’b00000= Disable VIU to VDIN clock //5’b00001= Enble clock VIU of ENC_I domain to VDIN //5’b00010= Enble clock VIU of ENC_P domain to VDIN //5’b00100= Enble clock VIU of ENC_T domain to VDIN //5’b01000= Enble clock VIU WriteBack 1 domain to VDIN //5’b10000= Enble clock VIU WriteBack 2 domain to VDIN
12-8	R/W	0	//Select VIU to “VDIN0/VDIN1 source 7” data path , must clear it first before changing the path sel //5’b00000= Disable VIU to VDIN clock //5’b00001= Enble clock VIU of ENC_I domain to VDIN //5’b00010= Enble clock VIU of ENC_P domain to VDIN //5’b00100= Enble clock VIU of ENC_T domain to VDIN //5’b01000= Enble clock VIU WriteBack 1 domain to VDIN //5’b10000= Enble clock VIU WriteBack 2 domain to VDIN
4-0	R/W	0	//Select Clock to “VDIN0/VDIN1 source 7” , must clear it first before changing the path sel //5’b00000= Disable VIU to VDIN clock //5’b00001= Enble clock VIU of ENC_I domain to VDIN //5’b00010= Enble clock VIU of ENC_P domain to VDIN //5’b00100= Enble clock VIU of ENC_T domain to VDIN //5’b01000= Enble clock VIU WriteBack 1 domain to VDIN //5’b10000= Enble clock VIU WriteBack 2 domain to VDIN

Table 10-272 VPU_VIU2VDIN1_HDN_CTRL

Bit(s)	R/W	Default	Description
20	R/W	0	software reset
19-18	R/W	0	reg_viu2vdin2_dn_ratio: down-scale ratio: 0->no scale; 1-> 1/2; 2->1/4; 3->reserved
17-16	R/W	0	reg_viu2vdin2_flt_mode: filter mode; 0->no filter; 1->[0 2 2 0]/4; 2->[1 1 1 1]/4; 3->[1 3 3 1]/8
15-14	R/W	0	reserved
13-0	R/W	0	reg_viu2vdin2_hsize: source horizontal size

Table 10-273 VPU_VENCX_CLK_CTRL

Bit(s)	R/W	Default	Description
2	R/W	0	Enci_afifo_clk: 0: cts_vpu_clk_tm 1: cts_vpu_clkc_tm
1	R/W	0	Encl_afifo_clk: 0: cts_vpu_clk_tm 1: cts_vpu_clkc_tm
0	R/W	0	Encp_afifo_clk: 0: cts_vpu_clk_tm 1: cts_vpu_clkc_tm

Amlogic Proprietary and Confidential
Copyright © Amlogic. All rights reserved.

Table 10-274 VPU_RDARB_MODE_L1C1 0x2790

Bit(s)	R/W	Default	Description
21:16	R/W	0	rdarb_sel : uns, default = 0 , rdarb_sel [0]==0 slave dc0 connect master port0 rdarb_sel[0]==1 slave dc0 connect master port1 rdarb_sel [1]==0 slave dc1 connect master port0 rdarb_sel[1]==1 slave dc1 connect master port1 rdarb_sel [2]==0 slave dc2 connect master port0 rdarb_sel[2]==1 slave dc2 connect master port1 rdarb_sel [3]==0 slave dc3 connect master port0 rdarb_sel[3]==1 slave dc3 connect master port1 rdarb_sel [4]==0 slave dc4 connect master port0 rdarb_sel[4]==1 slave dc4 connect master port1 rdarb_sel [5]==0 slave dc5 connect master port0 rdarb_sel[5]==1 slave dc5 connect master port1
9:8	R/W	0	rdarb_arb_mode : uns, default = 0 , rdarb_arb_mode [0] master port0 arb way, rdarb_arb_mode [1] master port1 arb way,
3:0	R/W	0	rdarb_gate_clk_ctrl : uns, default = 0 , rdarb_gate_clk_ctrl [1:0] master port0 clk gate control rdarb_gate_clk_ctrl [3:2] master port1 clk gate control

Table 10-275 VPU_RDARB_REQEN_SLV_L1C1 0x2791

Bit(s)	R/W	Default	Description
11:0	R/W	0xfff	rdarb_dc_req_en : unsigned , default = 12'hfff rdarb_dc_req_en [0]: the slv0 req to mst port0 enable, rdarb_dc_req_en [1]: the slv1 req to mst port0 enable, rdarb_dc_req_en [2]: the slv2 req to mst port0 enable, rdarb_dc_req_en [3]: the slv3 req to mst port0 enable, rdarb_dc_req_en [4]: the slv4 req to mst port0 enable, rdarb_dc_req_en [5]: the slv5 req to mst port0 enable, rdarb_dc_req_en [6]: the slv0 req to mst port1 enable, rdarb_dc_req_en [7]: the slv1 req to mst port1 enable, rdarb_dc_req_en [8]: the slv2 req to mst port1 enable, rdarb_dc_req_en [9]: the slv3 req to mst port1 enable, rdarb_dc_req_en [10]: the slv4 req to mst port1 enable, rdarb_dc_req_en [11]: the slv5 req to mst port1 enable,

Table 10-276 VPU_RDARB_WEIGH0_SLV_L1C1 0x2792

Bit(s)	R/W	Default	Description
29:0	R/W	0	rddc_weigh_sxn : unsigned , default = 0 rddc_weigh_sxn [0*6+:6]: the slv0 req weigh number rddc_weigh_sxn [1*6+:6]: the slv1 req weigh number rddc_weigh_sxn [2*6+:6]: the slv2 req weigh number rddc_weigh_sxn [3*6+:6]: the slv3 req weigh number rddc_weigh_sxn [4*6+:6]: the slv4 req weigh number

Table 10-277 VPU_RDARB_WEIGH1_SLV_L1C1 0x2793

Bit(s)	R/W	Default	Description
5:0	R/W	0	rddc_weigh_sxn : unsigned , default = 0 rddc_weigh_sxn [5*6+:6]: the slv5 req weigh number

Amlogic Proprietary and Confidential
Copyright © Amlogic. All rights reserved.

Table 10-278 VPU_WRARB_MODE_L1C1 0x2794

Bit(s)	R/W	Default	Description
21:16	R/W	0	wrarb_sel : uns, default = 0 , wrarb_sel [0]==0 slave dc0 connect master port0 wrarb_sel[0]==1 slave dc0 connect master port1 wrarb_sel [1]==0 slave dc1 connect master port0 wrarb_sel[1]==1 slave dc1 connect master port1 wrarb_sel [2]==0 slave dc2 connect master port0 wrarb_sel[2]==1 slave dc2 connect master port1 wrarb_sel [3]==0 slave dc3 connect master port0 wrarb_sel[3]==1 slave dc3 connect master port1 wrarb_sel [4]==0 slave dc4 connect master port0 wrarb_sel[4]==1 slave dc4 connect master port1 wrarb_sel [5]==0 slave dc5 connect master port0 wrarb_sel[5]==1 slave dc5 connect master port1
9:8	R/W	0	wrarb_arb_mode : uns, default = 0 , wrarb_arb_mode [0] master port0 arb way, wrarb_arb_mode [1] master port1 arb way,
3:0	R/W	0	wrarb_gate_clk_ctrl : uns, default = 0 , wrarb_gate_clk_ctrl [1:0] master port0 clk gate control wrarb_gate_clk_ctrl [3:2] master port1 clk gate control

Table 10-279 VPU_WRARB_REQEN_SLV_L1C1 0x2795

Bit(s)	R/W	Default	Description
11:0	R/W	0	wrarb_dc_req_en : unsigned , default = 0 wrarb_dc_req_en [0]: the slv0 req to mst port0 enable, wrarb_dc_req_en [1]: the slv1 req to mst port0 enable, wrarb_dc_req_en [2]: the slv2 req to mst port0 enable, wrarb_dc_req_en [3]: the slv3 req to mst port0 enable, wrarb_dc_req_en [4]: the slv4 req to mst port0 enable, wrarb_dc_req_en [5]: the slv5 req to mst port0 enable, wrarb_dc_req_en [0]: the slv0 req to mst port1 enable, wrarb_dc_req_en [1]: the slv1 req to mst port1 enable, wrarb_dc_req_en [2]: the slv2 req to mst port1 enable, wrarb_dc_req_en [3]: the slv3 req to mst port1 enable, wrarb_dc_req_en [4]: the slv4 req to mst port1 enable, wrarb_dc_req_en [5]: the slv5 req to mst port1 enable,

Table 10-280 VPU_WRARB_WEIGH0_SLV_L1C1 0x2796

Bit(s)	R/W	Default	Description
29:0	R/W	0	wrdc_weigh_sxn : unsigned , default = 0 wrdc_weigh_sxn [0*6+:6]: the slv0 req weigh number wrdc_weigh_sxn [1*6+:6]: the slv1 req weigh number wrdc_weigh_sxn [2*6+:6]: the slv2 req weigh number wrdc_weigh_sxn [3*6+:6]: the slv3 req weigh number wrdc_weigh_sxn [4*6+:6]: the slv4 req weigh number

Table 10-281 VPU_WRARB_WEIGH1_SLV_L1C1 0x2797

Bit(s)	R/W	Default	Description
5:0	R/W	0	wrdc_weigh_sxn : unsigned , default = 0 wrdc_weigh_sxn [5*6+:6]: the slv5 req weigh number

Amlogic Proprietary and Confidential
Copyright © Amlogic. All rights reserved.

Table 10-282 VPU_RDWR_ARB_STATUS_L1C1 0x2798

Bit(s)	R/W	Default	Description
3:2	R/W	0	wrarb_arb_busy : unsigned , default = 0
1:0	R/W	0	rdarb_arb_busy : unsigned , default = 0

Table 10-283 VPU_RDARB_MODE_L1C2 0x2799

Bit(s)	R/W	Default	Description
20:16	R/W	0	rdarb_sel : uns, default = 0 , rdarb_sel [0]==0 slave dc0 connect master port0 rdarb_sel[0]==1 slave dc0 connect master port1 rdarb_sel [1]==0 slave dc1 connect master port0 rdarb_sel[1]==1 slave dc1 connect master port1 rdarb_sel [2]==0 slave dc2 connect master port0 rdarb_sel[2]==1 slave dc2 connect master port1 rdarb_sel [3]==0 slave dc3 connect master port0 rdarb_sel[3]==1 slave dc3 connect master port1 rdarb_sel [4]==0 slave dc4 connect master port0 rdarb_sel[4]==1 slave dc4 connect master port1
9:8	R/W	0	rdarb_arb_mode : uns, default = 0 , rdarb_arb_mode [0] master port0 arb way, rdarb_arb_mode [1] master port1 arb way,
3:0	R/W	0	rdarb_gate_clk_ctrl : uns, default = 0 , rdarb_gate_clk_ctrl [1:0] master port0 clk gate control rdarb_gate_clk_ctrl [3:2] master port0 clk gate control

Table 10-284 VPU_RDARB_REQEN_SLV_L1C2 0x279a

Bit(s)	R/W	Default	Description
9:0	R/W	0	rdarb_dc_req_en : unsigned , default = 0 rdarb_dc_req_en [0]: the slv0 req to mst port0 enable, rdarb_dc_req_en [1]: the slv1 req to mst port0 enable, rdarb_dc_req_en [2]: the slv2 req to mst port0 enable, rdarb_dc_req_en [3]: the slv3 req to mst port0 enable, rdarb_dc_req_en [4]: the slv4 req to mst port0 enable, rdarb_dc_req_en [5]: the slv0 req to mst port1 enable, rdarb_dc_req_en [6]: the slv1 req to mst port1 enable, rdarb_dc_req_en [7]: the slv2 req to mst port1 enable, rdarb_dc_req_en [8]: the slv3 req to mst port1 enable, rdarb_dc_req_en [9]: the slv4 req to mst port1 enable,

Table 10-285 VPU_RDARB_WEIGH0_SLV_L1C2 0x279b

Bit(s)	R/W	Default	Description
29:0	R/W	0	rddc_weigh_sxn : unsigned , default = 0 rddc_weigh_sxn [0*6+:6]: the slv0 req weigh number rddc_weigh_sxn [1*6+:6]: the slv1 req weigh number rddc_weigh_sxn [2*6+:6]: the slv2 req weigh number rddc_weigh_sxn [3*6+:6]: the slv3 req weigh number rddc_weigh_sxn [4*6+:6]: the slv4 req weigh number

Table 10-286 VPU_RDWR_ARB_STATUS_L1C2 0x279c

Bit(s)	R/W	Default	Description
1:0	R/W	0	rdarb_arb_busy : unsigned , default = 0

Amlogic Proprietary and Confidential
Copyright © Amlogic. All rights reserved.

Table 10-287 VPU_RDARB_MODE_L2C1 0x279d

Bit(s)	R/W	Default	Description
27:16	R/W	0	rdarb_sel : uns, default = 0 , rdarb_sel [0]==0 slave dc0 connect master port0 rdarb_sel[0]==1 slave dc0 connect master port1 rdarb_sel [1]==0 slave dc1 connect master port0 rdarb_sel[1]==1 slave dc1 connect master port1 rdarb_sel [2]==0 slave dc2 connect master port0 rdarb_sel[2]==1 slave dc2 connect master port1 rdarb_sel [3]==0 slave dc3 connect master port0 rdarb_sel[3]==1 slave dc3 connect master port1 rdarb_sel [4]==0 slave dc4 connect master port0 rdarb_sel[4]==1 slave dc4 connect master port1 rdarb_sel [5]==0 slave dc5 connect master port0 rdarb_sel[5]==1 slave dc5 connect master port1
10:8	R/W	0	rdarb_arb_mode : uns, default = 0 , rdarb_arb_mode [0] master port0 arb way, rdarb_arb_mode [1] master port1 arb way,
5:0	R/W	0	rdarb_gate_clk_ctrl : uns, default = 0 , rdarb_gate_clk_ctrl [1:0] master port0 clk gate control rdarb_gate_clk_ctrl [3:2] master port1 clk gate control rdarb_gate_clk_ctrl [5:4] master port2 clk gate control

Table 10-288 VPU_RDARB_REQEN_SLV_L2C1 0x279e

Bit(s)	R/W	Default	Description
17:0	R/W	0	rdarb_dc_req_en : unsigned , default = 0 rdarb_dc_req_en [0]: the slv0 req to mst port0 enable, rdarb_dc_req_en [1]: the slv1 req to mst port0 enable, rdarb_dc_req_en [2]: the slv2 req to mst port0 enable, rdarb_dc_req_en [3]: the slv3 req to mst port0 enable, rdarb_dc_req_en [4]: the slv4 req to mst port0 enable, rdarb_dc_req_en [5]: the slv5 req to mst port0 enable, rdarb_dc_req_en [0]: the slv0 req to mst port1 enable, rdarb_dc_req_en [1]: the slv1 req to mst port1 enable, rdarb_dc_req_en [2]: the slv2 req to mst port1 enable, rdarb_dc_req_en [3]: the slv3 req to mst port1 enable, rdarb_dc_req_en [4]: the slv4 req to mst port1 enable, rdarb_dc_req_en [5]: the slv5 req to mst port1 enable,

Table 10-289 VPU_RDARB_WEIGH0_SLV_L2C1 0x279f

Bit(s)	R/W	Default	Description
29:0	R/W	0	rddc_weigh_sxn : unsigned , default = 0 rddc_weigh_sxn [0*6+:6]: the slv0 req weigh number rddc_weigh_sxn [1*6+:6]: the slv1 req weigh number rddc_weigh_sxn [2*6+:6]: the slv2 req weigh number rddc_weigh_sxn [3*6+:6]: the slv3 req weigh number rddc_weigh_sxn [4*6+:6]: the slv4 req weigh number

Table 10-290 VPU_RDARB_WEIGH1_SLV_L2C1 0x27a0

Bit(s)	R/W	Default	Description
5:0	R/W	0	rddc_weigh_sxn : unsigned , default = 0 rddc_weigh_sxn [5*6+:6]: the slv5 req weigh number

Table 10-291 VPU_RDWR_ARB_STATUS_L2C1 0x27a1

Bit(s)	R/W	Default	Description
3:2	R/W	0	wrarb_arb_busy : unsigned , default = 0
1:0	R/W	0	rdarb_arb_busy : unsigned , default = 0

Amlogic Proprietary and Confidential
Copyright © Amlogic. All rights reserved.

Table 10-292 VPU_WRARB_MODE_L2C1 0x27a2

Bit(s)	R/W	Default	Description
19:16	R/W	0	wrarb_sel : uns, default = 0 , wrarb_sel [0]==0 slave dc0 connect master port0 wrarb_sel[0]==1 slave dc0 connect master port1 wrarb_sel [1]==0 slave dc1 connect master port0 wrarb_sel[1]==1 slave dc1 connect master port1 wrarb_sel [2]==0 slave dc2 connect master port0 wrarb_sel[2]==1 slave dc2 connect master port1 wrarb_sel [3]==0 slave dc3 connect master port0 wrarb_sel[3]==1 slave dc3 connect master port1
9:8	R/W	0	wrarb_arb_mode : uns, default = 0 , wrarb_arb_mode [0] master port0 arb way, wrarb_arb_mode [1] master port1 arb way,
3:0	R/W	0	wrarb_gate_clk_ctrl : uns, default = 0 , wrarb_gate_clk_ctrl [1:0] master port0 clk gate control wrarb_gate_clk_ctrl [3:2] master port0 clk gate control

Table 10-293 VPU_WRARB_REQEN_SLV_L2C1 0x27a3

Bit(s)	R/W	Default	Description
7:0	R/W	0	wrarb_dc_req_en : unsigned , default = 0 wrarb_dc_req_en [0]: the slv0 req to mst port0 enable, wrarb_dc_req_en [1]: the slv1 req to mst port0 enable, wrarb_dc_req_en [2]: the slv2 req to mst port0 enable, wrarb_dc_req_en [3]: the slv3 req to mst port0 enable, wrarb_dc_req_en [0]: the slv0 req to mst port1 enable, wrarb_dc_req_en [1]: the slv1 req to mst port1 enable, wrarb_dc_req_en [2]: the slv2 req to mst port1 enable, wrarb_dc_req_en [3]: the slv3 req to mst port1 enable,

Table 10-294 VPU_WRARB_WEIGH0_SLV_L2C1 0x27a4

Bit(s)	R/W	Default	Description
23:0	R/W	0	wrdc_weigh_sxn : unsigned , default = 0 wrdc_weigh_sxn [0*6+:6]: the slv0 req weigh number wrdc_weigh_sxn [1*6+:6]: the slv1 req weigh number wrdc_weigh_sxn [2*6+:6]: the slv2 req weigh number wrdc_weigh_sxn [3*6+:6]: the slv3 req weigh number

Table 10-295 VPU_ASYNC_RD_MODE0 0x27a5

Bit(s)	R/W	Default	Description
18	R/W	0	req_en : unsigned , default = 0 async enable
17:16	R/W	0	clk_gate_ctrl : unsigned , default = 0 async clock gate control
15:12	R/W	4	auto_arugt_weight : unsigned , default = 4
10:9	R/W	0	arugt_sel : unsigned , default = 0 00 : use auto fifo arugt generate the output arugt. 01 : use the register bit control 00 : use the input arguent
8	R/W	0	arguent_cfg : unsigned , default = 0 register arguent control bit
7:4	R/W	4	rd_hold_num : unsigned , default = 4 hold the read command threshold
3:0	R/W	0	rd_rel_num : unsigned , default = 0 release the read command threshold

Amlogic Proprietary and Confidential
Copyright © Amlogic. All rights reserved.

Table 10-296 VPU_ASYNC_RD_MODE1 0x27a6

Bit(s)	R/W	Default	Description
18	R/W	0	req_en : unsigned , default = 0 async enable
17:16	R/W	0	clk_gate_ctrl : unsigned , default = 0 async clock gate control
15:12	R/W	4	auto_arugt_weight : unsigned , default = 4
10:9	R/W	0	arugt_sel : unsigned , default = 0 00 : use auto fifo arugt generate the output arugt. 01 : use the register bit control 00 : use the input arguent
8	R/W	0	arguent_cfg : unsigned , default = 0 register arguent control bit
7:4	R/W	4	rd_hold_num : unsigned , default = 4 hold the read command threshold
3:0	R/W	0	rd_rel_num : unsigned , default = 0 release the read command threshold

Table 10-297 VPU_ASYNC_RD_MODE2 0x27a7

Bit(s)	R/W	Default	Description
18	R/W	0	req_en : unsigned , default = 0 async enable
17:16	R/W	0	clk_gate_ctrl : unsigned , default = 0 async clock gate control
15:12	R/W	4	auto_arugt_weight : unsigned , default = 4
10:9	R/W	0	arugt_sel : unsigned , default = 0 00 : use auto fifo arugt generate the output arugt. 01 : use the register bit control 00 : use the input arguent
8	R/W	0	arguent_cfg : unsigned , default = 0 register arguent control bit
7:4	R/W	4	rd_hold_num : unsigned , default = 4 hold the read command threshold
3:0	R/W	0	rd_rel_num : unsigned , default = 0 release the read command threshold

Table 10-298 VPU_ASYNC_RD_MODE3 0x27a8

Bit(s)	R/W	Default	Description
18	R/W	0	req_en : unsigned , default = 0 async enable
17:16	R/W	0	clk_gate_ctrl : unsigned , default = 0 async clock gate control
15:12	R/W	4	auto_arugt_weight : unsigned , default = 4
10:9	R/W	0	arugt_sel : unsigned , default = 0 00 : use auto fifo arugt generate the output arugt. 01 : use the register bit control 00 : use the input arguent
8	R/W	0	arguent_cfg : unsigned , default = 0 register arguent control bit
7:4	R/W	4	rd_hold_num : unsigned , default = 4 hold the read command threshold
3:0	R/W	0	rd_rel_num : unsigned , default = 0 release the read command threshold

Table 10-299 VPU_ASYNC_RD_MODE4 0x27a9

Bit(s)	R/W	Default	Description
18	R/W	0	req_en : unsigned , default = 0 async enable
17:16	R/W	0	clk_gate_ctrl : unsigned , default = 0 async clock gate control

Amlogic Proprietary and Confidential
Copyright © Amlogic. All rights reserved.

Bit(s)	R/W	Default	Description
15:12	R/W	4	auto_arugt_weight : unsigned , default = 4
10:9	R/W	0	arugt_sel : unsigned , default = 0 00 : use auto fifo arugt generate the output arugt. 01 : use the register bit control 00 : use the input arguent
8	R/W	0	arguent_cfg : unsigned , default = 0 register arguent control bit
7:4	R/W	4	rd_hold_num : unsigned , default = 4 hold the read command threshold
3:0	R/W	0	rd_rel_num : unsigned , default = 0 release the read command threshold

Table 10-300 VPU_ASYNC_WR_MODE0 0x27aa

Bit(s)	R/W	Default	Description
18	R/W	0	req_en : unsigned , default = 0 async enable
17:16	R/W	0	clk_gate_ctrl : unsigned , default = 0 async clock gate control
15:12	R/W	4	auto_arugt_weight : unsigned , default = 4
10:9	R/W	0	arugt_sel : unsigned , default = 0 00 : use auto fifo arugt generate the output arugt. 01 : use the register bit control 00 : use the input arguent
8	R/W	0	arguent_cfg : unsigned , default = 0 register arguent control bit
7:4	R/W	4	wr_hold_num : unsigned , default = 4 hold the read command threshold
3:0	R/W	0	wr_rel_num : unsigned , default = 0 release the write command threshold

Table 10-301 VPU_ASYNC_WR_MODE1 0x27ab

Bit(s)	R/W	Default	Description
18	R/W	0	req_en : unsigned , default = 0 async enable
17:16	R/W	0	clk_gate_ctrl : unsigned , default = 0 async clock gate control
15:12	R/W	4	auto_arugt_weight : unsigned , default = 4
10:9	R/W	0	arugt_sel : unsigned , default = 0 00 : use auto fifo arugt generate the output arugt. 01 : use the register bit control 00 : use the input arguent
8	R/W	0	arguent_cfg : unsigned , default = 0 register arguent control bit
7:4	R/W	4	wr_hold_num : unsigned , default = 4 hold the read command threshold
3:0	R/W	0	wr_rel_num : unsigned , default = 0 release the write command threshold

Table 10-302 VPU_ASYNC_WR_MODE2 0x27ac

Bit(s)	R/W	Default	Description
18	R/W	0	req_en : unsigned , default = 0 async enable
17:16	R/W	0	clk_gate_ctrl : unsigned , default = 0 async clock gate control
15:12	R/W	4	auto_arugt_weight : unsigned , default = 4
10:9	R/W	0	arugt_sel : unsigned , default = 0 00 : use auto fifo arugt generate the output arugt. 01 : use the register bit control 00 : use the input arguent
8	R/W	0	arguent_cfg : unsigned , default = 0 register arguent control bit

Amlogic Proprietary and Confidential
Copyright © Amlogic. All rights reserved.

Bit(s)	R/W	Default	Description
7:4	R/W	4	wr_hold_num : unsigned , default = 4 hold the read command threshold
3:0	R/W	0	wr_rel_num : unsigned , default = 0 release the write command threshold

Table 10-303 VPU_ASYNC_STAT 0x27ad

Bit(s)	R/W	Default	Description
18	R/W	0x0	axiwr2_chan_idle : unsigned , RO, axi write channel2 idle state
17	R/W	0x0	axiwr1_chan_idle : unsigned , RO, axi write channel1 idle state
16	R/W	0x0	axiwr0_chan_idle : unsigned , RO, axi write channel0 idle state
4	R/W	0x0	axird4_chan_idle : unsigned , RO, axi read channel4 idle state
3	R/W	0x0	axird3_chan_idle : unsigned , RO, axi read channel3 idle state
2	R/W	0x0	axird2_chan_idle : unsigned , RO, axi read channel2 idle state
1	R/W	0x0	axird1_chan_idle : unsigned , RO, axi read channel1 idle state
0	R/W	0x0	axird0_chan_idle : unsigned , RO, axi read channel0 idle state

Table 10-304 VPU_HDMI_DITH_01_04 0x27f0

Bit(s)	R/W	Default	Description
31-0	R/W	0x8214_1428	dith lut VPU_HDMI_DITH_CNTL[0] : 1 : lut for 10b to 8b0 : lut for 12b to 10b

Table 10-305 VPU_HDMI_DITH_01_15 0x27f1

Bit(s)	R/W	Default	Description
31-0	R/W	0x4128_2841	dith lut VPU_HDMI_DITH_CNTL[0] : 1 : lut for 10b to 8b0 : lut for 12b to 10b

Table 10-306 VPU_HDMI_DITH_01_26 0x27f2

Bit(s)	R/W	Default	Description
31-0	R/W	0x2841_4182	dith lut VPU_HDMI_DITH_CNTL[0] : 1 : lut for 10b to 8b0 : lut for 12b to 10b

Table 10-307 VPU_HDMI_DITH_01_37 0x27f3

Bit(s)	R/W	Default	Description
31-0	R/W	0x1482_8214	dith lut VPU_HDMI_DITH_CNTL[0] : 1 : lut for 10b to 8b0 : lut for 12b to 10b

Amlogic Proprietary and Confidential
Copyright © Amlogic. All rights reserved.

Table 10-308 VPU_HDMI_DITH_10_04 0x27f4

Bit(s)	R/W	Default	Description
31-0	R/W	0x9669_9696	dith lut VPU_HDMI_DITH_CNTL[0] : 1 : lut for 10b to 8b0 : lut for 12b to 10b

Table 10-309 VPU_HDMI_DITH_10_15 0x27f5

Bit(s)	R/W	Default	Description
31-0	R/W	0x3c3c_6969	dith lut VPU_HDMI_DITH_CNTL[0] : 1 : lut for 10b to 8b0 : lut for 12b to 10b

Table 10-310 VPU_HDMI_DITH_10_26 0x27f6

Bit(s)	R/W	Default	Description
31-0	R/W	0x6996_9696	dith lut VPU_HDMI_DITH_CNTL[0] : 1 : lut for 10b to 8b0 : lut for 12b to 10b

Table 10-311 VPU_HDMI_DITH_10_37 0x27f7

Bit(s)	R/W	Default	Description
31-0	R/W	0xc3c3_6969	dith lut VPU_HDMI_DITH_CNTL[0] : 1 : lut for 10b to 8b0 : lut for 12b to 10b

Table 10-312 VPU_HDMI_DITH_11_04 0x27f8

Bit(s)	R/W	Default	Description
31-0	R/W	0x7deb_ebd7	dith lut VPU_HDMI_DITH_CNTL[0] : 1 : lut for 10b to 8b0 : lut for 12b to 10b

Table 10-313 VPU_HDMI_DITH_11_15 0x27f9

Bit(s)	R/W	Default	Description
31-0	R/W	0xbed7_d7be	dith lut VPU_HDMI_DITH_CNTL[0] : 1 : lut for 10b to 8b0 : lut for 12b to 10b

Table 10-314 VPU_HDMI_DITH_11_26 0x27fa

Bit(s)	R/W	Default	Description
31-0	R/W	0xd7be_be7d	dith lut VPU_HDMI_DITH_CNTL[0] : 1 : lut for 10b to 8b0 : lut for 12b to 10b

Table 10-315 VPU_HDMI_DITH_11_37 0x27fb

Bit(s)	R/W	Default	Description
31-0	R/W	0xeb7d_7deb	dith lut VPU_HDMI_DITH_CNTL[0] : 1 : lut for 10b to 8b0 : lut for 12b to 10b

Amlogic Proprietary and Confidential
Copyright © Amlogic. All rights reserved.

Table 10-316 VPU_HDMI_DITH_CNTL

10b to 8b dither control register. 12b to 10b see VPU_HDMI_FMT_CTRL

Bit(s)	R/W	Default	Description
21-19	R/W	0	rame count offset for B
18-16	R/W	0	frame count offset for G
15	R/W	0	hcnt hold when de valid
14	R/W	0	RGB frame count separate
13	R/W	0	dith4x4 : frame random enable
12	R/W	0	dith4x4 enable
11	R/W	0	tunnel enable for DOLBY
10	R/W	0	rounding enable
9-6	R/W	0	Cntl_hdmi_dith10 :
5	R/W	0	Cntl_hdmi_dith_md:
4	R/W	0	Cntl_hdmi_dith_en: dither 10-b to 8-b enable
3	R/W	0	hsync invert
2	R/W	0	vsync invert
0	R/W	0	dither lut sel :1 : sel 10b to 8b0: sel 12b to 10b

Table 10-317 VPU_VENCL_DITH_CTRL

Bit(s)	R/W	Default	Description
19-17	R/W	0	dither 2x2 : frame number sel
16	R/W	0	dither 2x2 : frame number random
15-14	R/W	0	Reserved
13-11	R/W	7	G frame number offset
10-8	R/W	3	B frame number offset
7	R/W	0	Reserved
6	R/W	1	dither 4x4 : G/B frame number = B frame number + offset g/b
5	R/W	0	dither 4x4 : frame number random
4	R/W	1	dither 4x4 : enable
3	R/W	0	Reserved
2	R/W	0	dither md
1	R/W	0	rounding enable
0	R/W	1	dither enable

Amlogic Proprietary and Confidential
Copyright © Amlogic. All rights reserved.

Table 10-318 VPU_VENCL_DITH_LUT_1

Bit(s)	R/W	Default	Description
31-0	R/W	0x8214_1428	dith lut

Table 10-319 VPU_VENCL_DITH_LUT_2

Bit(s)	R/W	Default	Description
31-0	R/W	0x4128_2841	dith lut

Table 10-320 VPU_VENCL_DITH_LUT_3

Bit(s)	R/W	Default	Description
31-0	R/W	0x2841_4182	dith lut

Table 10-321 VPU_VENCL_DITH_LUT_4

Bit(s)	R/W	Default	Description
31-0	R/W	0x1482_8214	dith lut

Table 10-322 VPU_VENCL_DITH_LUT_5

Bit(s)	R/W	Default	Description
31-0	R/W	0x9669_9696	dith lut

Table 10-323 VPU_VENCL_DITH_LUT_6

Bit(s)	R/W	Default	Description
31-0	R/W	0x3c3c_6969	dith lut

Table 10-324 VPU_VENCL_DITH_LUT_7

Bit(s)	R/W	Default	Description
31-0	R/W	0x6996_9696	dith lut

Table 10-325 VPU_VENCL_DITH_LUT_8

Bit(s)	R/W	Default	Description
31-0	R/W	0xc3c3_6969	dith lut

Amlogic Proprietary and Confidential
Copyright © Amlogic. All rights reserved.

Table 10-326 VPU_VENCL_DITH_LUT_9

Bit(s)	R/W	Default	Description
31-0	R/W	0x7deb_ebd7	dith lut

Table 10-327 VPU_VENCL_DITH_LUT_10

Bit(s)	R/W	Default	Description
31-0	R/W	0xbed7_d7be	dith lut

Table 10-328 VPU_VENCL_DITH_LUT_11

Bit(s)	R/W	Default	Description
31-0	R/W	0xd7be_be7d	dith lut

Table 10-329 VPU_VENCL_DITH_LUT_12

Bit(s)	R/W	Default	Description
31-0	R/W	0xeb7d_7deb	dith lut

10.2.3.2 VPU Video Lock Registers

Register Address

The following lists describe the mapping between each register and its address.

- VPU_VLOCK_CTRL 0xff00c000
- VPU_VLOCK_MISC_CTRL 0xff00c004
- VPU_VLOCK_LOOP0_ACCUM_LMT 0xff00c008
- VPU_VLOCK_LOOP0_CTRL0 0xff00c00c
- VPU_VLOCK_LOOP1_CTRL0 0xff00c010
- VPU_VLOCK_LOOP1_IMISSYNC_MAX 0xff00c014
- VPU_VLOCK_LOOP1_IMISSYNC_MIN 0xff00c018
- VPU_VLOCK_OVWRITE_ACCUM0 0xff00c01c
- VPU_VLOCK_OVWRITE_ACCUM1 0xff00c020
- VPU_VLOCK_OUTPUT0_CAPT_LMT 0xff00c024
- VPU_VLOCK_OUTPUT0_PLL_LMT 0xff00c028
- VPU_VLOCK_OUTPUT1_CAPT_LMT 0xff00c02c
- VPU_VLOCK_OUTPUT1_PLL_LMT 0xff00c030
- VPU_VLOCK_LOOP1_PHSDIF_TGT 0xff00c034
- VPU_VLOCK_RO_LOOP0_ACCUM 0xff00c038
- VPU_VLOCK_RO_LOOP1_ACCUM 0xff00c03c
- VPU_VLOCK_OROW_OCOL_MAX 0xff00c040

Amlogic Proprietary and Confidential
Copyright © Amlogic. All rights reserved.

- VPU_VLOCK_RO_VS_I_DIST 0xff00c044
- VPU_VLOCK_RO_VS_O_DIST 0xff00c048
- VPU_VLOCK_RO_LINE_PIX_ADJ 0xff00c04c
- VPU_VLOCK_RO_OUTPUT_00_01 0xff00c050
- VPU_VLOCK_RO_OUTPUT_10_11 0xff00c054
- VPU_VLOCK_MX4096 0xff00c058
- VPU_VLOCK_STBDET_WIN0_WIN1 0xff00c05c
- VPU_VLOCK_STBDET_CLP 0xff00c060
- VPU_VLOCK_STBDET_ABS_WIN0 0xff00c064
- VPU_VLOCK_STBDET_ABS_WIN1 0xff00c068
- VPU_VLOCK_STBDET_SGN_WIN0 0xff00c06c
- VPU_VLOCK_STBDET_SGN_WIN1 0xff00c070
- VPU_VLOCK_ADJ_EN_SYNC_CTRL 0xff00c074
- VPU_VLOCK_GCLK_EN 0xff00c078
- VPU_VLOCK_LOOP1_ACCUM_LMT 0xff00c07c
- VPU_VLOCK_RO_M_INT_FRAC 0xff00c080
- VPU_VLOCK_RO_PH_DIS 0xff00c084
- VPU_VLOCK_RO_PH_ERR 0xff00c088
- VPU_VLOCK_LOCK_TH 0xff00c08c
- VPU_VLOCK_RO_LCK_FRM 0xff00c090
- VPU_VLOCK_WIN0_TH 0xff00c094
- VPU_VLOCK_WIN0_RATIO 0xff00c098
- VPU_VLOCK_WIN0_FILTER_CNTL 0xff00c09c
- VPU_VLOCK_WIN1_TH 0xff00c0a0
- VPU_VLOCK_WIN1_RATIO 0xff00c0a4
- VPU_VLOCK_WIN1_FILTER_CNTL 0xff00c0a8
- VPU_VLOCK_LOCK_TH1 0xff00c0ac
- VPU_VLOCK_LOOP0_ERR_LMT 0xff00c0b0
- VPU_VLOCK_LOOP1_ERR_LMT 0xff00c0b4
- VPU_VLOCK_ERR_CTRL0 0xff00c0b8
- VPU_VLOCK_RO_VS_O_ABS_CNT_LSB 0xff00c0bc
- VPU_VLOCK_RO_VS_I_ABS_CNT_LSB 0xff00c0c0
- VPU_VLOCK_RO_VS_ABS_CNT_MSB 0xff00c0c4

Register Description

Table 10-330 VPU_VLOCK_CTRL

Bit(s)	R/W	Default	Description
31	R/W	0x0	Vid_lock_en: 1: enable video lock module
30	R/W	0x0	Reg_adj_enc: enable video lock to adjust encoder
29	R/W	0x0	Adj_pll: enable video lock to adjust PLL
28	R/W	0x0	Mpeg_vs: set this to 1, then 0, this is software controlled mpeg vsync
27-26	R/W	0x0	Output goes to which module: 0: encl, 1: encp, 2:enci

Amlogic Proprietary and Confidential
Copyright © Amlogic. All rights reserved.

Bit(s)	R/W	Default	Description
25-20	R/W	0x0	Output vsync width extend: make sure the vsync width is extended big enough for vpu_vid_lock_clk to sample
19	R/W	0x0	m frac right shift 1 : right shift 2 bit 0 : no shift
18-16	R/W	0x0	Input Vsync source select: 0: unuse, 1: fromhdmi rx , 2:from tv-decoder, 3: from dvin, 4: from dvin, 5: from 2nd bt656
15			Output vsync invert: 1, invert
14			Input vsync invert: 1, invert
13-8	R/W		Input vsync width extend: make sure the vsync width is extended big enough for vpu_vid_lock_clk to sample
7			Force loop1 err enable: 1. Force error of loop1
6			Force loop0 err enable: 1. Force error of loop0
5			Overwrite accum0 enable
4			Loop0 adjust capture enable
3			Loop0 adjust pll enable
2			Overwrite accum1 enable
1			Loop1 adjust capture enable
0			Loop0 adjust pll enable

Table 10-331 VPU_VLOCK_MISC_CTRL

Bit(s)	R/W	Default	Description
28	R/W	0x0	for interlace : get average of every two input vsync
26-24	R/W	0x0	Adj_capt_pxgrouprs, make sure the pixel number in one line of encoder is multiples of 2^pxgrouprs
23-16	R/W	0x0	Ifrm_cnt_mod: (output vsync freq)/(input vsync_freq * ifrm_cnt_mod) must be integer
15-8	R/W	0x0	Output vsync frequency
7-0	R/W	0x0	Input vsync frequency

Table 10-332 VPU_VLOCK_LOOP0_ACCUM_LMT

Bit(s)	R/W	Default	Description
26-0	R/W	0x0	LOOP0 accumulator limit

Table 10-333 VPU_VLOCK_LOOP0_CTRL0

Bit(s)	R/W	Default	Description
31-24	R/W	0x0	Loop0 errclip rate
23-20	R/W	0x0	Loop0_adj_pll_rs, right shift of loop0 adjust pll portion
19-12	R/W	0x0	Loop0_adj_pll_gain, u1.7

Amlogic Proprietary and Confidential
Copyright © Amlogic. All rights reserved.

Bit(s)	R/W	Default	Description
11-8	R/W	0x0	Loop0_adj_capt_rs, right shift of loop0 adjust capture portion
7-0	R/W	0x0	Loop0_adj_capt_gain

Table 10-334 VPU_VLOCK_LOOP0_CTRL1

Bit(s)	R/W	Default	Description
23-20	R/W	0x0	Loop1_adj_pll_rs
19-12	R/W	0x0	Loop1_adj_pll_gain
11-8	R/W	0x0	Loop1_adj_capt_rs
7-0	R/W	0x0	Loop1_adj_capt_gain

Table 10-335 VPU_VLOCK_LOOP1_IMISSYNC_MAX

Bit(s)	R/W	Default	Description
27-0	R/W	0x0	Loop1 imissync max, input signal is missed after input vsync counter is larger than this max threshold

Table 10-336 VPU_VLOCK_LOOP1_IMISSYNC_MIN

Bit(s)	R/W	Default	Description
27-0	R/W	0x0	Loop1 imissync min, input signal is missed after input vsync counter is less than this max threshold

Table 10-337 VPU_VLOCK_OVERWRITE_ACCUM0

Bit(s)	R/W	Default	Description
27-0	R/W	0x0	Overwrite value of accum0

Table 10-338 VPU_VLOCK_OVERWRITE_ACCUM1

Bit(s)	R/W	Default	Description
27-0	R/W	0x0	Overwrite value of accum1

Table 10-339 VPU_VLOCK_OUTPUT0_CAPT_LMT

Bit(s)	R/W	Default	Description
26-0	R/W	0x0	Output0 capture limit

Table 10-340 VPU_VLOCK_OUTPUT0_PLL_LMT

Bit(s)	R/W	Default	Description
26-0	R/W	0x0	Output0 pll limit

Amlogic Proprietary and Confidential
Copyright © Amlogic. All rights reserved.

Table 10-341 VPU_VLOCK_OUTPUT1_CAPT_LMT

Bit(s)	R/W	Default	Description
26-0	R/W	0x0	Output1 capture limit

Table 10-342 VPU_VLOCK_OUTPUT1_PLL_LMT

Bit(s)	R/W	Default	Description
26-0	R/W	0x0	Output1 pll limit

Table 10-343 VPU_VLOCK_LOOP1_PHSDIF_TARGET

Bit(s)	R/W	Default	Description
27-0	R/W	0x0	Loop1 phase difference target, (input vsync - output vsync) phase distance target

Table 10-344 VPU_VLOCK_RO_LOOP0_ACCUM

Bit(s)	R/W	Default	Description
27-0	R	0x0	Read only, loop0 accum result

Table 10-345 VPU_VLOCK_RO_LOOP1_ACCUM

Bit(s)	R/W	Default	Description
27-0	R	0x0	Read only, loop1 accum result

Table 10-346 VPU_VLOCK_OROW_OCOL_MAX

Bit(s)	R/W	Default	Description
29-16	R/W	0x0	Ocol_max
13-0	R/W	0x0	Orow_max

Table 10-347 VPU_VLOCK_RO_VS_I_D

Bit(s)	R/W	Default	Description
27-0	R	0x0	Read only, input vsync counter

Table 10-348 VPU_VLOCK_RO_VS_O_D

Bit(s)	R/W	Default	Description
27-0	R	0x0	Read only, output vsync counter

Amlogic Proprietary and Confidential
Copyright © Amlogic. All rights reserved.

Table 10-349 VPU_VLOCK_RO_LINE_PIX_ADJ

Bit(s)	R/W	Default	Description
29-16	R	0x0	Read only, encoder line adjust number
13-0	R	0x0	Read only, encoder pix adjust number

Table 10-350 VPU_VLOCK_RO_OUTPUT_00_01

Bit(s)	R/W	Default	Description
31-16	R	0x0	Read only, accum0 output 00
15-0	R	0x0	Read only, accum0 output 01

Table 10-351 VPU_VLOCK_RO_OUTPUT_10_11

Bit(s)	R/W	Default	Description
31-16	R	0x0	Read only, accum1 output 10
15-0	R	0x0	Read only, accum1 output 11

Table 10-352 VPU_VLOCK_MX4096

Bit(s)	R/W	Default	Description
20-0	R/W	0x0	Mx4096

Table 10-353 VPU_VLOCK_STBDET_WIN0_WIN1

Bit(s)	R/W	Default	Description
15-8	R/W	0x0	Verr_stbdet_win1
7-0	R/W	0x0	Verr_stbdet_win0

Table 10-354 VPU_VLOCK_STBDET_CLP

Bit(s)	R/W	Default	Description
15-8	R	0x0	Read only, ro_verr_clp_win1, verr_clp number in win0
7-0	R	0x0	Read only, ro_verr_clp_win0, verr clp number in win1

Table 10-355 VPU_VLOCK_STBDET_ABS_WIN0

Bit(s)	R/W	Default	Description
23-0	R	0x0	Read only, ro_verr_abs_win0

Amlogic Proprietary and Confidential
Copyright © Amlogic. All rights reserved.

Table 10-356 VPU_VLOCK_STBDET_ABS_WIN1

Bit(s)	R/W	Default	Description
23-0	R	0x0	Read only, ro_verr_abs_win1

Table 10-357 VPU_VLOCK_STBDET_SGN_WIN0

Bit(s)	R/W	Default	Description
23-0	R	0x0	Read only, ro_verr_sgn_win0

Table 10-358 VPU_VLOCK_STBDET_SGN_WIN1

Bit(s)	R/W	Default	Description
23-0	R	0x0	Read only, ro_verr_sgn_win1

Table 10-359 VPU_VLOCK_ADJ_EN_SYNC_CTRL

Bit(s)	R/W	Default	Description
31-24	R/W	0x0	PLL adjust enable signal sync ctrl, adj_en_for_pll_end, end counter of adj_en_pll signal fall to 0
23-16	R/W	0x0	PLL adjust enable signal sync ctrl, adj_en_for_pll_start, start counter of adj_en_ pll signal go to 1, start must be larger than end
15-8	R/W	0x0	Adj_en_sync_latch_cnt, this is a delay to latch the adj_en signal
7-0	R/W	0x0	Adj_en_ext_cnt, extend the adj_en signal from vid_lock clock domain to pll sample domain, make sure it's wide enough

Table 10-360 VPU_VLOCK_GCLK_EN

Bit(s)	R/W	Default	Description
2	R/W	0x0	Ref clock enable
1	R/W	0x0	Vsout clk enable
0	R/W	0x0	Vsin clk enable

Table 10-361 VPU_VLOCK_LOOP1_ACCUM_LMT

Bit(s)	R/W	Default	Description
26-0	R/W	0x0	LOOP1 accumulator limit

Table 10-362 VPU_VLOCK_RO_M_INT_FRAC

Bit(s)	R/W	Default	Description
29-16	R	0x0	Read only, m_int to PLL
13-0	R	0x0	Read only, m_frac to PLL

Amlogic Proprietary and Confidential
Copyright © Amlogic. All rights reserved.

Table 10-363 VPU_VLOCK_RO_PH_DIS

Bit(s)	R/W	Default	Description
27-0	R	0x0	phase distance RO

Table 10-364 VPU_VLOCK_RO_PH_ERR

Bit(s)	R/W	Default	Description
27-0	R	0x0	phase error RO

Table 10-365 VPU_VLOCK_LOCK_TH

Bit(s)	R/W	Default	Description
31-16	R/W	0x0	phase error threshold

Table 10-366 VPU_VLOCK_LOCK_TH1

Bit(s)	R/W	Default	Description
21-0	R/W	0x0	frequency error threshold

Table 10-367 VPU_VLOCK_RO_LCK_FRM

Bit(s)	R/W	Default	Description
31-18	R/W	0x0	reserved
17	R/W	0x0	phase lock flag
16	R/W	0x0	frequency lock flag
15-0	R/W	0x0	ro_lock_frame_count

Table 10-368 VPU_VLOCK_WIN0_TH

Bit(s)	R/W	Default	Description
23-0	R/W	0x0	reg_win0_th

Table 10-369 VPU_VLOCK_WIN0_RATIO

Bit(s)	R/W	Default	Description
7-0	R/W	0x0	reg_win0_ratio

Table 10-370 VPU_VLOCK_WIN0_FILTER_CNTL

Bit(s)	R/W	Default	Description
20-0	R/W	0x0	reg_win0_lock_filter_cntl

Amlogic Proprietary and Confidential
Copyright © Amlogic. All rights reserved.

Table 10-371 VPU_VLOCK_WIN1_TH

Bit(s)	R/W	Default	Description
23-0	R/W	0x0	reg_win0_th

Table 10-372 VPU_VLOCK_WIN1_RATIO

Bit(s)	R/W	Default	Description
7-0	R/W	0x0	reg_win0_ratio

Table 10-373 VPU_VLOCK_WIN1_FILTER_CNTL

Bit(s)	R/W	Default	Description
20-0	R/W	0x0	reg_win0_lock_filter_cntl

10.2.3.3 VPU_AFBCE Registers

DI AFBCE Registers

Table 10-374 DI_AFBCE_ENABLE 0x2060

Bit(s)	R/W	Default	Description
31:20	R/W	0	gclk_ctrl : unsigned , default = 0, gclk_ctrl of afbe submodule : 12'h000 : gatting afbce clock. 12'hfff : free_run afbce clock. 12'h555 : close afbce clock.
19:16	R/W	0	1) afbce_sync_sel : unsigned , default = 0, shadow some size/scope/mode registers in afbce 4'hf : sync active. 4'h0: sync close.
13	R/W	0	enc_rst_mode : unsigned , default = 0, frame rst mode bits: 1:use software reset as frame reset by writing a pulse to register DI_AFBCE_MODE[29]. 0:use vsync as frame reset.
12	R/W	0	enc_en_mode : unsigned , default = 0, DI_AFBCE start mode bits: 1: DI_AFBCE start_up by writing a pulse to register DI_AFBCE_ENABLE[0]. 0: DI_AFBCE start_up several line after vsync,line number setting by DI_AFBCE_MODE[22:16].
8	R/W	0	enc_enable : unsigned , default = 0, 1: open DI_AFBCE module. 0: close DI_AFBCE module.
0	R/W	0	enc_frm_start : DI_AFBCE start_up bits This bits can start afbce by writing high signal when DI_AFBCE_ENABLE[12] equal 1.

Amlogic Proprietary and Confidential
Copyright © Amlogic. All rights reserved.

Table 10-375 DI_AFBCE_MODE 0x2061

Bit(s)	R/W	Default	Description
31:29	R/W	0	soft_rst : unsigned, default = 0 , bit[0] async rst ,soft_ware ctrl async rst bit[1] sync rst ,soft_ware ctrl sync rst bit[2] sync rst by vsync
27:26	R/W	0	rev_mode : unsigned, default = 0 , reverse mode Useless in afbce
25:24	R/W	3	mif_urgent : unsigned, default = 3 , head mif and body mif urgent bit[0] head axi write urgent. bit[1] body axi write urgent.
22:16	R/W	4	hold_line_num : unsigned, default = 4, hold_line_num
15:14	R/W	1	burst_mode : unsigned, default = 1, 0:burst1 1:burst2 2:burst4
0	R/W	0	reg_fmt444_comb : unsigned, default = 0, Put 444_8bit data into 422 12bit buffer,if hsize > 1024(di_afbce) 0r hsize > 2048 (vdin_afbce),this bit should be high. 0: 444 8bit comb mode close 1: 444 8bit comb mode open

Table 10-376 DI_AFBCE_SIZE_IN 0x2062

Bit(s)	R/W	Default	Description
28:16	R/W	1920	hsize : unsigned, default = 1920 , hsize of afbce encoder buffer
12:0	R/W	1080	vsize : unsigned, default = 1080 , vsize of afbce encoder buffer

Table 10-377 DI_AFBCE_BLK_SIZE_IN 0x2063

Bit(s)	R/W	Default	Description
28:16	R/W	60	hblk_size : unsigned, default = 60 , blk horz size out unit: 32*4 block hblk_size of afbce encoder buffer
12:0	R/W	270	vblk_size : unsigned, default = 270, blk vert size out unit: 32*4 block vblk_size of afbce encoder buffer

Table 10-378 DI_AFBCE_HEAD_BADDR 0x2064

Bit(s)	R/W	Default	Description
31:0	R/W	0x00	head_baddr : unsigned, default = 32'h00,head_baddr

Table 10-379 DI_AFBCE_MIF_SIZE 0x2065

Bit(s)	R/W	Default	Description
29:28	R/W	32	ddr_blk_size : unsigned, default = 32'd1,ddr_blk_size
26:24	R/W	32	cmd_blk_size : unsigned, default = 32'd3,cmd_blk_size

Amlogic Proprietary and Confidential
Copyright © Amlogic. All rights reserved.

Bit(s)	R/W	Default	Description
20:16	R/W	32	uncmp_size : unsigned, default = 32'd20 ,uncmp_size of a uncompressed 32*4 block uncmp_size = ((16*uncmp_bits*sblk_num+7)>>3 +31)/32 << 1
15:0	R/W	32	mmu_page_size : unsigned, default = 32'd4096,mmu_page_size 4096/8192

Table 10-380 DI_AFBCE_PIXEL_IN_HOR_SCOPE 0x2066

Bit(s)	R/W	Default	Description
28:16	R/W	1919	enc_win_end_h : unsigned, default = 1919 ,pic scope hor end
12:0	R/W	0	enc_win_bgn_h : unsigned, default = 0 ,pic scope hor bgn

Table 10-381 DI_AFBCE_PIXEL_IN_VER_SCOPE 0x2067

Bit(s)	R/W	Default	Description
28:16	R/W	1079	enc_win_end_v : unsigned, default = 1079 ,pic scope ver end
12:0	R/W	0	enc_win_bgn_v : unsigned, default = 0 ,pic scope ver bgn

Table 10-382 DI_AFBCE_CONV_CTRL 0x2068

Bit(s)	R/W	Default	Description
28:16	R/W	2048	fmt_ybuf_depth : unsigned, default = 2048,fmt_ybuf_depth,fixed
11: 0	R/W	256	lbuf_depth : unsigned, default = 256, lbuf_depth,fixed

Table 10-383 DI_AFBCE_MIF_HOR_SCOPE 0x2069

Bit(s)	R/W	Default	Description
25:16	R/W	0	blk_end_h : unsigned, default = 0 ,blk scope horend
9:0	R/W	59	blk_bgn_h : unsigned, default = 59 ,blk scope horbgn

Table 10-384 DI_AFBCE_MIF_VER_SCOPE 0x206a

Bit(s)	R/W	Default	Description
27:16	R/W	0	blk_end_v : unsigned, default = 0 ,blk scope ver end
11:0	R/W	269	blk_bgn_v : unsigned, default = 269 ,blk scope ver bgn

Table 10-385 DI_AFBCE_STAT1 0x206b

Bit(s)	R/W	Default	Description
31	R.O	0	ro_frm_end_pulse1 : unsigned, RO,default = 0 ;frame end status
30:0	R.O	0	ro_dbg_top_info1 : unsigned, RO,default = 0 ,ro_dbg_top_info1

Amlogic Proprietary and Confidential
Copyright © Amlogic. All rights reserved.

Table 10-386 DI_AFBCE_STAT2 0x206c

Bit(s)	R/W	Default	Description
30:0	R.O	0	ro_dbg_top_info2 : unsigned, RO,default = 0 ,ro_dbg_top_info2

Table 10-387 DI_AFBCE_FORMAT 0x206d

Bit(s)	R/W	Default	Description
9: 8	R/W	2	reg_format_mode : // unsigned , RW, default = 2 data format; 0 :YUV444/RGB, 1 :YUV422, 2 :YUV420,
7: 4	R/W	10	reg_compbits_c : // unsigned , RW, default = 10 chroma bitwidth 8 or 10
3: 0	R/W	10	reg_compbits_y : // unsigned , RW, default = 10 luma bitwidth 8 or 10

Table 10-388 DI_AFBCE_MODE_EN 0x206e

Bit(s)	R/W	Default	Description
25	R/W	0	reg_adpt_interleave_ymode : // unsigned , RW, default = 0 force 0 to disable it: no HW implementation
24	R/W	0	reg_adpt_interleave_cmode : // unsigned , RW, default = 0 force 0 to disable it: not HW implementation
23	R/W	1	reg_adpt_yinterleave_luma_ride : // unsigned , RW, default = 1 vertical interleave piece luma reorder ride; 0: no reorder ride; 1: w/4 as ride
22	R/W	1	reg_adpt_yinterleave_chrm_ride : // unsigned , RW, default = 1 vertical interleave piece chroma reorder ride; 0: no reorder ride; 1: w/2 as ride
21	R/W	1	reg_adpt_xinterleave_luma_ride : // unsigned , RW, default = 1 vertical interleave piece luma reorder ride; 0: no reorder ride; 1: w/4 as ride
20	R/W	1	reg_adpt_xinterleave_chrm_ride : // unsigned , RW, default = 1 vertical interleave piece chroma reorder ride; 0: no reorder ride; 1: w/2 as ride
18	R/W	0	reg_disable_order_mode_i_6 : // unsigned , RW, default = 0 disable order mode0~6: each mode with one disable bit: 0: no disable, 1: disable
17	R/W	0	reg_disable_order_mode_i_5 : // unsigned , RW, default = 0 disable order mode0~6: each mode with one disable bit: 0: no disable, 1: disable
16	R/W	0	reg_disable_order_mode_i_4 : // unsigned , RW, default = 0 disable order mode0~6: each mode with one disable bit: 0: no disable, 1: disable
15	R/W	0	reg_disable_order_mode_i_3 : // unsigned , RW, default = 0 disable order mode0~6: each mode with one disable bit: 0: no disable, 1: disable
14	R/W	0	reg_disable_order_mode_i_2 : // unsigned , RW, default = 0 disable order mode0~6: each mode with one disable bit: 0: no disable, 1: disable
13	R/W	0	reg_disable_order_mode_i_1 : // unsigned , RW, default = 0 disable order mode0~6: each mode with one disable bit: 0: no disable, 1: disable
12	R/W	0	reg_disable_order_mode_i_0 : // unsigned , RW, default = 0 disable order mode0~6: each mode with one disable bit: 0: no disable, 1: disable
10	R/W	0	reg_minval_yenc_en : // unsigned , RW, default = 0 force disable, final decision to remove this ws 1% performance loss
9	R/W	0	reg_16x4block_enable : // unsigned , RW, default = 0 block as mission, but permit 16x4 block

Amlogic Proprietary and Confidential
Copyright © Amlogic. All rights reserved.

Bit(s)	R/W	Default	Description
8	R/W	0	reg_uncompress_split_mode : // unsigned , RW, default = 0 0: no split; 1: split
5	R/W	0	reg_input_padding_uv128 : // unsigned , RW, default = 0 input picture 32x4 block gap mode: 0: pad uv=0; 1: pad uv=128
4	R/W	0	reg_dwds_padding_uv128 : // unsigned , RW, default = 0 downsampled image for double write 32x gap mode: 0: pad uv=0; 1: pad uv=128
3: 1	R/W	0	reg_force_order_mode_value : // unsigned , RW, default = 0 force order mode 0~7
0	R/W	0	reg_force_order_mode_en : // unsigned , RW, default = 0 force order mode enable: 0: no force; 1: forced to force_value

Table 10-389 DI_AFBCE_DWSCALAR 0x206f

Bit(s)	R/W	Default	Description
7: 6	R/W	3	reg_dwscalar_w0 : // unsigned , RW, default = 3 horizontal 1st step scalar mode: 0: 1:1 no scalar; 1: 2:1 data drop (0,2,4, 6) pixel kept; 2: 2:1 data drop (1, 3, 5,7..) pixels kept; 3: avg
5: 4	R/W	0	reg_dwscalar_w1 : // unsigned , RW, default = 0 horizontal 2nd step scalar mode: 0: 1:1 no scalar; 1: 2:1 data drop (0,2,4, 6) pixel kept; 2: 2:1 data drop (1, 3, 5,7..) pixels kept; 3: avg
3: 2	R/W	2	reg_dwscalar_h0 : // unsigned , RW, default = 2 vertical 1st step scalar mode: 0: 1:1 no scalar; 1: 2:1 data drop (0,2,4, 6) pixel kept; 2: 2:1 data drop (1, 3, 5,7..) pixels kept; 3: avg
1: 0	R/W	3	reg_dwscalar_h1 : // unsigned , RW, default = 3 vertical 2nd step scalar mode: 0: 1:1 no scalar; 1: 2:1 data drop (0,2,4, 6) pixel kept; 2: 2:1 data drop (1, 3, 5,7..) pixels kept; 3: avg

Table 10-390 DI_AFBCE_DEFCOLOR_1 0x2070

Bit(s)	R/W	Default	Description
23:12	R/W	4095	reg_enc_defalutcolor_3 : // unsigned , RW, default = 4095 Picture wise default color value in [Y Cb Cr]
11: 0	R/W	4095	reg_enc_defalutcolor_0 : // unsigned , RW, default = 4095 Picture wise default color value in [Y Cb Cr]

Table 10-391 DI_AFBCE_DEFCOLOR_2 0x2071

Bit(s)	R/W	Default	Description
23:12	R/W	2048	reg_enc_defalutcolor_2 : // unsigned , RW, default = 2048 wise default color value in [Y Cb Cr]
11: 0	R/W	2048	reg_enc_defalutcolor_1 : // unsigned , RW, default = 2048 wise default color value in [Y Cb Cr]

Amlogic Proprietary and Confidential
Copyright © Amlogic. All rights reserved.

Table 10-392 DI_AFBCE_QUANT_ENABLE 0x2072

Bit(s)	R/W	Default	Description
11	R/W	0	reg_quant_expand_en_1 : // unsigned , RW, default = 0 enable for quantization value expansion
10	R/W	0	reg_quant_expand_en_0 : // unsigned , RW, default = 0 enable for quantization value expansion
9: 8	R/W	0	reg_bcleav_ofst : // signed , RW, default = 0 bcleave ofset to get lower range, especially under lossy, for v1/v2, x=0 is equivalent, default = -1;
4	R/W	0	reg_quant_enable_1 : // unsigned , RW, default = 0 enable for quant to get some lossy
0	R/W	0	reg_quant_enable_0 : // unsigned , RW, default = 0 enable for quant to get some lossy

Table 10-393 DI_AFBCE_IQUANT_LUT_1 0x2073

Bit(s)	R/W	Default	Description
30:28	R/W	0	reg_iquant_yclut_0_11 : // unsigned , RW, default = 0 quantization lut for mintree leavs, iquant=2^lut(bc_leav_q+1)
26:24	R/W	1	reg_iquant_yclut_0_10 : // unsigned , RW, default = 1 quantization lut for mintree leavs, iquant=2^lut(bc_leav_q+1)
22:20	R/W	2	reg_iquant_yclut_0_9 : // unsigned , RW, default = 2 quantization lut for mintree leavs, iquant=2^lut(bc_leav_q+1)
18:16	R/W	3	reg_iquant_yclut_0_8 : // unsigned , RW, default = 3 quantization lut for mintree leavs, iquant=2^lut(bc_leav_q+1)
14:12	R/W	4	reg_iquant_yclut_0_7 : // unsigned , RW, default = 4 quantization lut for mintree leavs, iquant=2^lut(bc_leav_q+1)
10: 8	R/W	5	reg_iquant_yclut_0_6 : // unsigned , RW, default = 5 quantization lut for mintree leavs, iquant=2^lut(bc_leav_q+1)
6: 4	R/W	5	reg_iquant_yclut_0_5 : // unsigned , RW, default = 5 quantization lut for mintree leavs, iquant=2^lut(bc_leav_q+1)
2: 0	R/W	4	reg_iquant_yclut_0_4 : // unsigned , RW, default = 4 quantization lut for mintree leavs, iquant=2^lut(bc_leav_q+1)

Table 10-394 DI_AFBCE_IQUANT_LUT_2 0x2074

Bit(s)	R/W	Default	Description
14:12	R/W	3	reg_iquant_yclut_0_3 : // unsigned , RW, default = 3 quantization lut for mintree leavs, iquant=2^lut(bc_leav_q+1)
10: 8	R/W	2	reg_iquant_yclut_0_2 : // unsigned , RW, default = 2 quantization lut for mintree leavs, iquant=2^lut(bc_leav_q+1)
6: 4	R/W	1	reg_iquant_yclut_0_1 : // unsigned , RW, default = 1 quantization lut for mintree leavs, iquant=2^lut(bc_leav_q+1)
2: 0	R/W	0	reg_iquant_yclut_0_0 : // unsigned , RW, default = 0 quantization lut for mintree leavs, iquant=2^lut(bc_leav_q+1)

Amlogic Proprietary and Confidential
Copyright © Amlogic. All rights reserved.

Table 10-395 DI_AFBCE_IQUANT_LUT_3 0x2075

Bit(s)	R/W	Default	Description
30:28	R/W	0	reg_iquant_yclut_1_11 : // unsigned , RW, default = 0 quantization lut for mintree leavs, iquant=2^lut(bc_leav_q+1)
26:24	R/W	1	reg_iquant_yclut_1_10 : // unsigned , RW, default = 1 quantization lut for mintree leavs, iquant=2^lut(bc_leav_q+1)
22:20	R/W	2	reg_iquant_yclut_1_9 : // unsigned , RW, default = 2 quantization lut for mintree leavs, iquant=2^lut(bc_leav_q+1)
18:16	R/W	3	reg_iquant_yclut_1_8 : // unsigned , RW, default = 3 quantization lut for mintree leavs, iquant=2^lut(bc_leav_q+1)
14:12	R/W	4	reg_iquant_yclut_1_7 : // unsigned , RW, default = 4 quantization lut for mintree leavs, iquant=2^lut(bc_leav_q+1)
10: 8	R/W	5	reg_iquant_yclut_1_6 : // unsigned , RW, default = 5 quantization lut for mintree leavs, iquant=2^lut(bc_leav_q+1)
6: 4	R/W	5	reg_iquant_yclut_1_5 : // unsigned , RW, default = 5 quantization lut for mintree leavs, iquant=2^lut(bc_leav_q+1)
2: 0	R/W	4	reg_iquant_yclut_1_4 : // unsigned , RW, default = 4 quantization lut for mintree leavs, iquant=2^lut(bc_leav_q+1)

Table 10-396 DI_AFBCE_IQUANT_LUT_4 0x2076

Bit(s)	R/W	Default	Description
14:12	R/W	3	reg_iquant_yclut_1_3 : // unsigned , RW, default = 3 quantization lut for mintree leavs, iquant=2^lut(bc_leav_q+1)
10: 8	R/W	2	reg_iquant_yclut_1_2 : // unsigned , RW, default = 2 quantization lut for mintree leavs, iquant=2^lut(bc_leav_q+1)
6: 4	R/W	1	reg_iquant_yclut_1_1 : // unsigned , RW, default = 1 quantization lut for mintree leavs, iquant=2^lut(bc_leav_q+1)
2: 0	R/W	0	reg_iquant_yclut_1_0 : // unsigned , RW, default = 0 quantization lut for mintree leavs, iquant=2^lut(bc_leav_q+1)

Table 10-397 DI_AFBCE_RQUANT_LUT_1 0x2077

Bit(s)	R/W	Default	Description
30:28	R/W	5	reg_rquant_yclut_0_11 : // unsigned , RW, default = 5 quantization lut for bctree leavs, quant=2^lut(bc_leav_r+1), can be calculated from iquant_yclut(fw_setting)
26:24	R/W	5	reg_rquant_yclut_0_10 : // unsigned , RW, default = 5
22:20	R/W	4	reg_rquant_yclut_0_9 : // unsigned , RW, default = 4
18:16	R/W	4	reg_rquant_yclut_0_8 : // unsigned , RW, default = 4
14:12	R/W	3	reg_rquant_yclut_0_7 : // unsigned , RW, default = 3
10: 8	R/W	3	reg_rquant_yclut_0_6 : // unsigned , RW, default = 3
6: 4	R/W	2	reg_rquant_yclut_0_5 : // unsigned , RW, default = 2
2: 0	R/W	2	reg_rquant_yclut_0_4 : // unsigned , RW, default = 2

Amlogic Proprietary and Confidential
Copyright © Amlogic. All rights reserved.

Table 10-398 DI_AFBCE_RQUANT_LUT_2 0x2078

Bit(s)	R/W	Default	Description
14:12	R/W	1	reg_rquant_yclut_0_3 : // unsigned , RW, default = 1
10: 8	R/W	1	reg_rquant_yclut_0_2 : // unsigned , RW, default = 1
6: 4	R/W	0	reg_rquant_yclut_0_1 : // unsigned , RW, default = 0
2: 0	R/W	0	reg_rquant_yclut_0_0 : // unsigned , RW, default = 0

Table 10-399 DI_AFBCE_RQUANT_LUT_3 0x2079

Bit(s)	R/W	Default	Description
30:28	R/W	5	reg_rquant_yclut_1_11 : // unsigned , RW, default = 5 quantization lut for bctree leavs, quant=2^lut(bc_leav_r+1), can be calculated from iquant_yclut(fw_setting)
26:24	R/W	5	reg_rquant_yclut_1_10 : // unsigned , RW, default = 5
22:20	R/W	4	reg_rquant_yclut_1_9 : // unsigned , RW, default = 4
18:16	R/W	4	reg_rquant_yclut_1_8 : // unsigned , RW, default = 4
14:12	R/W	3	reg_rquant_yclut_1_7 : // unsigned , RW, default = 3
10: 8	R/W	3	reg_rquant_yclut_1_6 : // unsigned , RW, default = 3
6: 4	R/W	2	reg_rquant_yclut_1_5 : // unsigned , RW, default = 2
2: 0	R/W	2	reg_rquant_yclut_1_4 : // unsigned , RW, default = 2

Table 10-400 DI_AFBCE_RQUANT_LUT_4 0x207a

Bit(s)	R/W	Default	Description
14:12	R/W	1	reg_rquant_yclut_1_3 : // unsigned , RW, default = 1
10: 8	R/W	1	reg_rquant_yclut_1_2 : // unsigned , RW, default = 1
6: 4	R/W	0	reg_rquant_yclut_1_1 : // unsigned , RW, default = 0
2: 0	R/W	0	reg_rquant_yclut_1_0 : // unsigned , RW, default = 0

Table 10-401 DI_AFBCE_YUV_FORMAT_CONV_MODE 0x207b

Bit(s)	R/W	Default	Description
6: 4	R/W	0	reg_444to422_mode : // unsigned , RW, default = 0
2: 0	R/W	0	reg_422to420_mode : // unsigned , RW, default = 0

Table 10-402 DI_AFBCE_DUMMY_DATA 0x207c

Bit(s)	R/W	Default	Description
29: 0	R/W	0	reg_dummy_data : // unsigned , default = 0 ,bit[9:0] v bit[19:10] U bit[29:20] Y

Amlogic Proprietary and Confidential
Copyright © Amlogic. All rights reserved.

Table 10-403 DI_AFBCE_CLR_FLAG 0x207d

Bit(s)	R/W	Default	Description
2	R/W	0	frm_din_end_clr : // unsigned, default = 0 ;
1	R/W	0	enc_error_clr : // unsigned, default = 0 ;
0	R/W	0	frm_end_clr : // unsigned, default = 0 ;

Table 10-404 DI_AFBCE_STA_FLAGT 0x207e

Bit(s)	R/W	Default	Description
31:28	R.O	0	reverse
27	R.O	0	ro_init_end_flag;//init phas end
26	R.O	0	ro_din_frm_end_flag;//data din finished
25:24	R.O	0	enc_st 0:idle 1:enc 2:hold 3:wait
23:21	R.O	0	emit_st 0:idle 1:tx_bcrot 2:tx_bc_lev 3:tx_zcd 4:tx_tree 5:tx_uncmp 6:tx_redu 7:tx_check
20:15	R.O	0	ro_cmd2bresp_cnt: // unsigned, RO,default = 0 ;
14:9	R.O	0	ro_enc2body_cnt: // unsigned, RO,default = 0 ;
8:3	R.O	0	ro_cmd2wd_cnt: // unsigned, RO,default = 0 ;
2	R.O	0	ro_wr_abort_flag: // unsigned, RO,default = 0 ;
1	R.O	0	ro_enc_error_flag: // unsigned, RO,default = 0 ;
0	R.O	0	ro_frm_end_flag: // unsigned, RO,default = 0 ;

Table 10-405 DI_AFBCE_MMU_NUM 0x207f

Bit(s)	R/W	Default	Description
15: 0	R.O	0	ro_frm_mmu_num : // unsigned, RO,default = 0 ,mmu addr have been used in a frame

Table 10-406 DI_AFBCE_MMU_RMIF_CTRL1 0x2080

Bit(s)	R/W	Default	Description
25:24	R/W	0	reg_sync_sel : // unsigned , default = 0, axi canvas id sync with frm rst
23:16	R/W	0	reg_canvas_id : // unsigned , default = 0, axi canvas id num
14:12	R/W	1	reg_cmd_intr_len : // unsigned , default = 1, interrupt send cmd when how many series axi cmd, 0 =12 1=16 2=24 3=32 4=40 5=48 6=56 7=64

Amlogic Proprietary and Confidential
Copyright © Amlogic. All rights reserved.

Bit(s)	R/W	Default	Description
11:10	R/W	1	reg_cmd_req_size : // unsigned , default = 1, how many room fifo have, then axi send series req, 0=16 1=32 2=24 3=64
9:8	R/W	2	reg_burst_len : // unsigned , default = 2, burst type: 0-single 1-bst2 2-bst4
7	R/W	0	reg_swap_64bit : // unsigned , default = 0, 64bits of 128bit swap enable
6	R/W	0	reg_little_endian : // unsigned , default = 0, big endian enable
5	R/W	0	reg_y_rev : // unsigned , default = 0, vertical reverse enable
4	R/W	0	reg_x_rev : // unsigned , default = 0, horizontal reverse enable
2:0	R/W	3	reg_pack_mode : // unsigned , default = 3, 0:4bit 1:8bit 2:16bit 3:32bit 4:64bit 5:128bit

Table 10-407 DI_AFBCE_MMU_RMIF_CTRL2 0x2081

Bit(s)	R/W	Default	Description
31:30	R/W	0	reg_sw_rst : // unsigned , default = 0,
23:18	R/W	0x0	reg_gclk_ctrl :
16:0	R/W	0	reg_urgent_ctrl : // unsigned , default = 0, urgent control reg : 16 reg_ugt_init : urgent initial value 15 reg_ugt_en : urgent enable 14 reg_ugt_type : 1= wrmif 0= rdmif 7 :4 reg_ugt_top_th: urgent top threshold 3 :0 reg_ugt_bot_th: urgent bottom threshold

Table 10-408 DI_AFBCE_MMU_RMIF_CTRL3 0x2082

Bit(s)	R/W	Default	Description
16	R/W	1	reg_acc_mode : // unsigned , default = 1,
12:0	R/W	4096	reg_stride : // unsigned , default = 4096,

Table 10-409 DI_AFBCE_MMU_RMIF_CTRL4 0x2083

Bit(s)	R/W	Default	Description
31:0	R/W	0	reg_baddr : // unsigned , default = 0, reg_mmu_baddr

Table 10-410 DI_AFBCE_MMU_RMIF_SCOPE_X 0x2084

Bit(s)	R/W	Default	Description
28:16	R/W	4095	reg_x_end : // unsigned , default = 4095, the canvas hor end pixel position
12: 0	R/W	0	reg_x_start : // unsigned , default = 0, the canvas hor start pixel position

Table 10-411 DI_AFBCE_MMU_RMIF_SCOPE_Y 0x2085

Bit(s)	R/W	Default	Description
28:16	R/W	0	reg_y_end : // unsigned , default = 0, the canvas ver end pixel position
12: 0	R/W	0	reg_y_start : // unsigned , default = 0, the canvas ver start pixel positio

Amlogic Proprietary and Confidential
Copyright © Amlogic. All rights reserved.

Table 10-412 DI_AFBCE_MMU_RMIF_RO_STAT 0x2086

Bit(s)	R/W	Default	Description
15:0	R/W	0x0	reg_status : // unsigned , reg_status

Table 10-413 DI_AFBCE_PIP_CTRL 0x208a

Bit(s)	R/W	Description
2	R/W	reg_enc_align_en : //unsigned , RW, default = 1,
1	R/W	reg_pip_ini_ctrl : //unsigned , RW,default = 0,
0	R/W	reg_pip_mode : //unsigned , RW,default = 0,

Table 10-414 DI_AFBCE_ROT_CTRL 0x208b

Bit(s)	R/W	Default	Description
4	R.O	0	reg_rot_en : //unsigned , RW,default = 0, rotation enable
3:0	R/W	8	reg_vstep : //unsigned , RW,default = 8, rotation vstep ,setting acorrding rotation shrink mode

Table 10-415 DI_AFBCE_DIMM_CTRL 0x208c

Bit(s)	R/W	Default	Description
31	R/W	0	reg_dimm_layer_en : //unsigned , RW,default = 0,dimm_layer enable signal
29:0	R/W	0x0008-0200	reg_dimm_data : //unsigned , RW,default = 29'h00080200,dimm_layer data

Table 10-416 DI_AFBCE_BND_DEC_MISC 0x208d

Bit(s)	R/W	Default	Description
27:26	R/W	0	bnd_dec_rev_mode : //unsigned , RW,default = 0 only pip mode use those bits, ususaly don't need configure
25:24	R/W	3	bnd_dec_mif_urgent : //unsigned , RW,default = 3 only pip mode use those bits, ususaly don't need configure
23:22	R/W	2	bnd_dec_burst_len : //unsigned , RW,default = 2 only pip mode use those bits, ususaly don't need configure
21:20	R/W	1	bnd_dec_ddr_blk_size : //unsigned , RW,default = 1 only pip mode use those bits,ususaly don't need configure
18:16	R/W	3	bnd_dec_cmd_blk_size : //unsigned , RW,default = 3 only pip mode use those bits,ususaly don't need configure
14	R/W	0	bnd_dec_blk_mem_mode : //unsigned , RW,default = 0 only pip mode use those bits,ususaly don't need configure
13	R/W	1	bnd_dec_addr_link_en : //unsigned , RW,default = 1 only pip mode use those bits,ususaly don't need configure

Amlogic Proprietary and Confidential
Copyright © Amlogic. All rights reserved.

Bit(s)	R/W	Default	Description
12	R/W	0	bnd_dec_always_body_rden : //unsigned , RW,default = 0 only pip mode use those bits,ususaly don't need configure
11:0	R/W	128	bnd_dec_mif_lbuf_depth : //unsigned , RW,default = 128 only pip mode use those bits,ususaly don't need configure

DI AFBCE1 Registers

Table 10-417 DI_AFBCE1_ENABLE 0x20c0

Bit(s)	R/W	Default	Description
31:20	R/W	0	gclk_ctrl : unsigned , default = 0, gclk_ctrl of afbe submodule : 12'h000 : gatting afbce clock. 12'hfff : free_run afbce clock. 12'h555 : close afbce clock.
19:16	R/W	0	2) afbce_sync_sel : unsigned , default = 0, shadow some size/scope/mode registers in afbce 4'hf : sync active. 4'h0: sync close.
13	R/W	0	enc_rst_mode : unsigned , default = 0, frame rst mode bits: 1:use software reset as frame reset by writing a pulse to register DI_AFBCE1_MODE[29]. 0:use vsync as frame reset.
12	R/W	0	enc_en_mode : unsigned , default = 0, DI_AFBCE1 start mode bits: 1: DI_AFBCE1 start_up by writing a pulse to register DI_AFBCE1_ENABLE[0]. 0: DI_AFBCE1 start_up several line after vsync, line number setting by DI_AFBCE1_MODE[22:16].
8	R/W	0	enc_enable : unsigned , default = 0, 1: open DI_AFBCE1 module. 0: close DI_AFBCE1 module.
0	R/W	0	enc_frm_start : DI_AFBCE1 start_up bits This bits can start afbce by writing high signal when DI_AFBCE1_ENABLE[12] equal 1.

Table 10-418 DI_AFBCE1_MODE 0x20c1

Bit(s)	R/W	Default	Description
31:29	R/W	0	soft_rst : unsigned, default = 0 , bit[0] async rst ,soft_ware ctrl async rst bit[1] sync rst ,soft_ware ctrl sync rst bit[2] sync rst by vsync
27:26	R/W	0	rev_mode : unsigned, default = 0 , reverse mode Useless in afbce
25:24	R/W	3	mif_urgent : unsigned, default = 3 , head mif and body mif urgent bit[0] head axi write urgent. bit[1] body axi write urgent.
22:16	R/W	4	hold_line_num : unsigned, default = 4, hold_line_num

Amlogic Proprietary and Confidential
Copyright © Amlogic. All rights reserved.

Bit(s)	R/W	Default	Description
15:14	R/W	1	burst_mode : unsigned, default = 1, 0:burst1 1:burst2 2:burst4
0	R/W	0	reg_fmt444_comb : unsigned, default = 0, Put 444_8bit data into 422 12bit buffer,if hsize > 1024(DI_AFBCE1) 0r hsize > 2048(vdin_afbce),this bit should be high. 0: 444 8bit comb mode close 1: 444 8bit comb mode open

Table 10-419 DI_AFBCE1_SIZE_IN 0x20c2

Bit(s)	R/W	Default	Description
28:16	R/W	1920	hsize : unsigned, default = 1920 , hsize of afbce encoder buffer
12:0	R/W	1080	vsize : unsigned, default = 1080 , vsize of afbce encoder buffer

Table 10-420 DI_AFBCE1_BLK_SIZE_IN 0x20c3

Bit(s)	R/W	Default	Description
28:16	R/W	60	hblk_size : unsigned, default = 60 , blk horz size out unit: 32*4 block hblk_size of afbce encoder buffer
12:0	R/W	270	vblk_size : unsigned, default = 270, blk vert size out unit: 32*4 block vblk_size of afbce encoder buffer

Table 10-421 DI_AFBCE1_HEAD_BADDR 0x20c4

Bit(s)	R/W	Default	Description
31:0	R/W	0x00	head_baddr : unsigned, default = 32'h00, head_baddr

Table 10-422 DI_AFBCE1_MIF_SIZE 0x20c5

Bit(s)	R/W	Default	Description
29:28	R/W	32	ddr_blk_size : unsigned, default = 32'd1,ddr_blk_size
26:24	R/W	32	cmd_blk_size : unsigned, default = 32'd3,cmd_blk_size
20:16	R/W	32	uncmp_size : unsigned, default = 32'd20 ,uncmp_size of a uncompressed 32*4 block uncmp_size = ((16*uncmp_bits*sblk_num+7)>>3 +31)/32 << 1
15:0	R/W	32	mmu_page_size : unsigned, default = 32'd4096,mmu_page_size 4096/8192

Table 10-423 DI_AFBCE1_PIXEL_IN_HOR_SCOPE 0x20c6

Bit(s)	R/W	Default	Description
28:16	R/W	1919	enc_win_end_h : unsigned, default = 1919, pic scope hor end
12:0	R/W	0	enc_win_bgn_h : unsigned, default = 0, pic scope hor bgn

Amlogic Proprietary and Confidential
Copyright © Amlogic. All rights reserved.

Table 10-424 DI_AFBCE1_PIXEL_IN_VER_SCOPE 0x20c7

Bit(s)	R/W	Default	Description
28:16	R/W	1079	enc_win_end_v : unsigned, default = 1079 ,pic scope ver end
12:0	R/W	0	enc_win_bgn_v : unsigned, default = 0 ,pic scope ver bgn

Table 10-425 DI_AFBCE1_CONV_CTRL 0x20c8

Bit(s)	R/W	Default	Description
28:16	R/W	2048	fmt_ybuf_depth : unsigned, default = 2048,fmt_ybuf_depth,fixed
11: 0	R/W	256	lbuf_depth : unsigned, default = 256, lbuf_depth,fixed

Table 10-426 DI_AFBCE1_MIF_HOR_SCOPE 0x20c9

Bit(s)	R/W	Default	Description
25:16	R/W	0	blk_end_h : unsigned, default = 0 ,blk scope horend
9:0	R/W	59	blk_bgn_h : unsigned, default = 59 ,blk scope horbgn

Table 10-427 DI_AFBCE1_MIF_VER_SCOPE 0x20ca

Bit(s)	R/W	Default	Description
27:16	R/W	0	blk_end_v : unsigned, default = 0 ,blk scope ver end
11:0	R/W	269	blk_bgn_v : unsigned, default = 269 ,blk scope ver bgn

Table 10-428 DI_AFBCE1_STAT1 0x20cb

Bit(s)	R/W	Default	Description
31	R.O	0	ro_frm_end_pulse1 : unsigned, RO,default = 0 ;frame end status
30:0	R.O	0	ro_dbg_top_info1 : unsigned, RO,default = 0 ,ro_dbg_top_info1

Table 10-429 DI_AFBCE1_STAT2 0x20cc

Bit(s)	R/W	Default	Description
30:0	R.O	0	ro_dbg_top_info2 : unsigned, RO,default = 0 ,ro_dbg_top_info2

Amlogic Proprietary and Confidential
Copyright © Amlogic. All rights reserved.

Table 10-430 DI_AFBCE1_FORMAT 0x20cd

Bit(s)	R/W	Default	Description
9: 8	R/W	2	reg_format_mode : // unsigned , RW, default = 2 data format; 0 :YUV444/RGB, 1 :YUV422, 2 :YUV420,
7: 4	R/W	10	reg_compbits_c : // unsigned , RW, default = 10 chroma bitwidth 8 or 10
3: 0	R/W	10	reg_compbits_y : // unsigned , RW, default = 10 luma bitwidth 8 or 10

Table 10-431 DI_AFBCE1_MODE_EN 0x20ce

Bit(s)	R/W	Default	Description
25	R/W	0	reg_adpt_interleave_ymode : // unsigned , RW, default = 0 force 0 to disable it: no HW implementation
24	R/W	0	reg_adpt_interleave_cmode : // unsigned , RW, default = 0 force 0 to disable it: not HW implementation
23	R/W	1	reg_adpt_yinterleave_luma_ride : // unsigned , RW, default = 1 vertical interleave piece luma reorder ride; 0: no reorder ride; 1: w/4 as ride
22	R/W	1	reg_adpt_yinterleave_chrm_ride : // unsigned , RW, default = 1 vertical interleave piece chroma reorder ride; 0: no reorder ride; 1: w/2 as ride
21	R/W	1	reg_adpt_xinterleave_luma_ride : // unsigned , RW, default = 1 vertical interleave piece luma reorder ride; 0: no reorder ride; 1: w/4 as ride
20	R/W	1	reg_adpt_xinterleave_chrm_ride : // unsigned , RW, default = 1 vertical interleave piece chroma reorder ride; 0: no reorder ride; 1: w/2 as ride
18	R/W	0	reg_disable_order_mode_i_6 : // unsigned , RW, default = 0 disable order mode0~6: each mode with one disable bit: 0: no disable, 1: disable
17	R/W	0	reg_disable_order_mode_i_5 : // unsigned , RW, default = 0 disable order mode0~6: each mode with one disable bit: 0: no disable, 1: disable
16	R/W	0	reg_disable_order_mode_i_4 : // unsigned , RW, default = 0 disable order mode0~6: each mode with one disable bit: 0: no disable, 1: disable
15	R/W	0	reg_disable_order_mode_i_3 : // unsigned , RW, default = 0 disable order mode0~6: each mode with one disable bit: 0: no disable, 1: disable
14	R/W	0	reg_disable_order_mode_i_2 : // unsigned , RW, default = 0 disable order mode0~6: each mode with one disable bit: 0: no disable, 1: disable
13	R/W	0	reg_disable_order_mode_i_1 : // unsigned , RW, default = 0 disable order mode0~6: each mode with one disable bit: 0: no disable, 1: disable
12	R/W	0	reg_disable_order_mode_i_0 : // unsigned , RW, default = 0 disable order mode0~6: each mode with one disable bit: 0: no disable, 1: disable
10	R/W	0	reg_minval_yenc_en : // unsigned , RW, default = 0 force disable, final decision to remove this ws 1% performance loss
9	R/W	0	reg_16x4block_enable : // unsigned , RW, default = 0 block as mission, but permit 16x4 block
8	R/W	0	reg_uncompress_split_mode : // unsigned , RW, default = 0 0: no split; 1: split
5	R/W	0	reg_input_padding_uv128 : // unsigned , RW, default = 0 input picture 32x4 block gap mode: 0: pad uv=0; 1: pad uv=128
4	R/W	0	reg_dwds_padding_uv128 : // unsigned , RW, default = 0 down sampled image for double write 32x gap mode: 0: pad uv=0; 1: pad uv=128

Amlogic Proprietary and Confidential
Copyright © Amlogic. All rights reserved.

Bit(s)	R/W	Default	Description
3: 1	R/W	0	reg_force_order_mode_value : // unsigned , RW, default = 0 force order mode 0~7
0	R/W	0	reg_force_order_mode_en : // unsigned , RW, default = 0 force order mode enable: 0: no force; 1: forced to force_value

Table 10-432 DI_AFBCE1_DWSCALAR 0x20cf

Bit(s)	R/W	Default	Description
7: 6	R/W	3	reg_dwscalar_w0 : // unsigned , RW, default = 3 horizontal 1st step scalar mode: 0: 1:1 no scalar; 1: 2:1 data drop (0,2,4, 6) pixel kept; 2: 2:1 data drop (1, 3, 5,7..) pixels kept; 3: avg
5: 4	R/W	0	reg_dwscalar_w1 : // unsigned , RW, default = 0 horizontal 2nd step scalar mode: 0: 1:1 no scalar; 1: 2:1 data drop (0,2,4, 6) pixel kept; 2: 2:1 data drop (1, 3, 5,7..) pixels kept; 3: avg
3: 2	R/W	2	reg_dwscalar_h0 : // unsigned , RW, default = 2 vertical 1st step scalar mode: 0: 1:1 no scalar; 1: 2:1 data drop (0,2,4, 6) pixel kept; 2: 2:1 data drop (1, 3, 5,7..) pixels kept; 3: avg
1: 0	R/W	3	reg_dwscalar_h1 : // unsigned , RW, default = 3 vertical 2nd step scalar mode: 0: 1:1 no scalar; 1: 2:1 data drop (0,2,4, 6) pixel kept; 2: 2:1 data drop (1, 3, 5,7..) pixels kept; 3: avg

Table 10-433 DI_AFBCE1_DEFCOLOR_1 0x20d0

Bit(s)	R/W	Default	Description
23:12	R/W	4095	reg_enc_defalutcolor_3 : // unsigned , RW, default = 4095 Picture wise default color value in [Y Cb Cr]
11: 0	R/W	4095	reg_enc_defalutcolor_0 : // unsigned , RW, default = 4095 Picture wise default color value in [Y Cb Cr]

Table 10-434 DI_AFBCE1_DEFCOLOR_2 0x20d1

Bit(s)	R/W	Default	Description
23:12	R/W	2048	reg_enc_defalutcolor_2 : // unsigned , RW, default = 2048 wise default color value in [Y Cb Cr]
11: 0	R/W	2048	reg_enc_defalutcolor_1 : // unsigned , RW, default = 2048 wise default color value in [Y Cb Cr]

Table 10-435 DI_AFBCE1_QUANT_ENABLE 0x20d2

Bit(s)	R/W	Default	Description
11	R/W	0	reg_quant_expand_en_1 : // unsigned , RW, default = 0 enable for quantization value expansion
10	R/W	0	reg_quant_expand_en_0 : // unsigned , RW, default = 0 enable for quantization value expansion
9: 8	R/W	0	reg_bcleav_ofst : // signed , RW, default = 0 bcleave ofset to get lower range, especially under lossy, for v1/v2, x=0 is equivalent, default = -1;

Amlogic Proprietary and Confidential
Copyright © Amlogic. All rights reserved.

Bit(s)	R/W	Default	Description
4	R/W	0	reg_quant_enable_1 : // unsigned , RW, default = 0 enable for quant to get some lossy
0	R/W	0	reg_quant_enable_0 : // unsigned , RW, default = 0 enable for quant to get some lossy

Table 10-436 DI_AFBCE1_IQUANT_LUT_1 0x20d3

Bit(s)	R/W	Default	Description
30:28	R/W	0	reg_iquant_yclut_0_11 : // unsigned , RW, default = 0 quantization lut for mintree leavs, iquant=2^lut(bc_leav_q+1)
26:24	R/W	1	reg_iquant_yclut_0_10 : // unsigned , RW, default = 1 quantization lut for mintree leavs, iquant=2^lut(bc_leav_q+1)
22:20	R/W	2	reg_iquant_yclut_0_9 : // unsigned , RW, default = 2 quantization lut for mintree leavs, iquant=2^lut(bc_leav_q+1)
18:16	R/W	3	reg_iquant_yclut_0_8 : // unsigned , RW, default = 3 quantization lut for mintree leavs, iquant=2^lut(bc_leav_q+1)
14:12	R/W	4	reg_iquant_yclut_0_7 : // unsigned , RW, default = 4 quantization lut for mintree leavs, iquant=2^lut(bc_leav_q+1)
10: 8	R/W	5	reg_iquant_yclut_0_6 : // unsigned , RW, default = 5 quantization lut for mintree leavs, iquant=2^lut(bc_leav_q+1)
6: 4	R/W	5	reg_iquant_yclut_0_5 : // unsigned , RW, default = 5 quantization lut for mintree leavs, iquant=2^lut(bc_leav_q+1)
2: 0	R/W	4	reg_iquant_yclut_0_4 : // unsigned , RW, default = 4 quantization lut for mintree leavs, iquant=2^lut(bc_leav_q+1)

Table 10-437 DI_AFBCE1_IQUANT_LUT_2 0x20d4

Bit(s)	R/W	Default	Description
14:12	R/W	3	reg_iquant_yclut_0_3 : // unsigned , RW, default = 3 quantization lut for mintree leavs, iquant=2^lut(bc_leav_q+1)
10: 8	R/W	2	reg_iquant_yclut_0_2 : // unsigned , RW, default = 2 quantization lut for mintree leavs, iquant=2^lut(bc_leav_q+1)
6: 4	R/W	1	reg_iquant_yclut_0_1 : // unsigned , RW, default = 1 quantization lut for mintree leavs, iquant=2^lut(bc_leav_q+1)
2: 0	R/W	0	reg_iquant_yclut_0_0 : // unsigned , RW, default = 0 quantization lut for mintree leavs, iquant=2^lut(bc_leav_q+1)

Table 10-438 DI_AFBCE1_IQUANT_LUT_3 0x20d5

Bit(s)	R/W	Default	Description
30:28	R/W	0	reg_iquant_yclut_1_11 : // unsigned , RW, default = 0 quantization lut for mintree leavs, iquant=2^lut(bc_leav_q+1)
26:24	R/W	1	reg_iquant_yclut_1_10 : // unsigned , RW, default = 1 quantization lut for mintree leavs, iquant=2^lut(bc_leav_q+1)
22:20	R/W	2	reg_iquant_yclut_1_9 : // unsigned , RW, default = 2 quantization lut for mintree leavs, iquant=2^lut(bc_leav_q+1)

Amlogic Proprietary and Confidential
Copyright © Amlogic. All rights reserved.

Bit(s)	R/W	Default	Description
18:16	R/W	3	reg_iquant_yclut_1_8 : // unsigned , RW, default = 3 quantization lut for mintree leavs, iquant=2^lut(bc_leav_q+1)
14:12	R/W	4	reg_iquant_yclut_1_7 : // unsigned , RW, default = 4 quantization lut for mintree leavs, iquant=2^lut(bc_leav_q+1)
10: 8	R/W	5	reg_iquant_yclut_1_6 : // unsigned , RW, default = 5 quantization lut for mintree leavs, iquant=2^lut(bc_leav_q+1)
6: 4	R/W	5	reg_iquant_yclut_1_5 : // unsigned , RW, default = 5 quantization lut for mintree leavs, iquant=2^lut(bc_leav_q+1)
2: 0	R/W	4	reg_iquant_yclut_1_4 : // unsigned , RW, default = 4 quantization lut for mintree leavs, iquant=2^lut(bc_leav_q+1)

Table 10-439 DI_AFBCE1_IQUANT_LUT_4 0x20d6

Bit(s)	R/W	Default	Description
14:12	R/W	3	reg_iquant_yclut_1_3 : // unsigned , RW, default = 3 quantization lut for mintree leavs, iquant=2^lut(bc_leav_q+1)
10: 8	R/W	2	reg_iquant_yclut_1_2 : // unsigned , RW, default = 2 quantization lut for mintree leavs, iquant=2^lut(bc_leav_q+1)
6: 4	R/W	1	reg_iquant_yclut_1_1 : // unsigned , RW, default = 1 quantization lut for mintree leavs, iquant=2^lut(bc_leav_q+1)
2: 0	R/W	0	reg_iquant_yclut_1_0 : // unsigned , RW, default = 0 quantization lut for mintree leavs, iquant=2^lut(bc_leav_q+1)

Table 10-440 DI_AFBCE1_RQUANT_LUT_1 0x20d7

Bit(s)	R/W	Default	Description
30:28	R/W	5	reg_rquant_yclut_0_11 : // unsigned , RW, default = 5 quantization lut for bctree leavs, quant=2^lut(bc_leav_r+1), can be calculated from iquant_yclut(fw_setting)
26:24	R/W	5	reg_rquant_yclut_0_10 : // unsigned , RW, default = 5
22:20	R/W	4	reg_rquant_yclut_0_9 : // unsigned , RW, default = 4
18:16	R/W	4	reg_rquant_yclut_0_8 : // unsigned , RW, default = 4
14:12	R/W	3	reg_rquant_yclut_0_7 : // unsigned , RW, default = 3
10: 8	R/W	3	reg_rquant_yclut_0_6 : // unsigned , RW, default = 3
6: 4	R/W	2	reg_rquant_yclut_0_5 : // unsigned , RW, default = 2
2: 0	R/W	2	reg_rquant_yclut_0_4 : // unsigned , RW, default = 2

Table 10-441 DI_AFBCE1_RQUANT_LUT_2 0x20d8

Bit(s)	R/W	Default	Description
14:12	R/W	1	reg_rquant_yclut_0_3 : // unsigned , RW, default = 1
10: 8	R/W	1	reg_rquant_yclut_0_2 : // unsigned , RW, default = 1
6: 4	R/W	0	reg_rquant_yclut_0_1 : // unsigned , RW, default = 0
2: 0	R/W	0	reg_rquant_yclut_0_0 : // unsigned , RW, default = 0

Amlogic Proprietary and Confidential
Copyright © Amlogic. All rights reserved.

Table 10-442 DI_AFBCE1_RQUANT_LUT_3 0x20d9

Bit(s)	R/W	Default	Description
30:28	R/W	5	reg_rquant_yclut_1_11 : // unsigned , RW, default = 5 quantization lut for bctree leavs, quant=2^lut(bc_leav_r+1), can be calculated from iquant_yclut(fw_setting)
26:24	R/W	5	reg_rquant_yclut_1_10 : // unsigned , RW, default = 5
22:20	R/W	4	reg_rquant_yclut_1_9 : // unsigned , RW, default = 4
18:16	R/W	4	reg_rquant_yclut_1_8 : // unsigned , RW, default = 4
14:12	R/W	3	reg_rquant_yclut_1_7 : // unsigned , RW, default = 3
10: 8	R/W	3	reg_rquant_yclut_1_6 : // unsigned , RW, default = 3
6: 4	R/W	2	reg_rquant_yclut_1_5 : // unsigned , RW, default = 2
2: 0	R/W	2	reg_rquant_yclut_1_4 : // unsigned , RW, default = 2

Table 10-443 DI_AFBCE1_RQUANT_LUT_4 0x20da

Bit(s)	R/W	Default	Description
14:12	R/W	1	reg_rquant_yclut_1_3 : // unsigned , RW, default = 1
10: 8	R/W	1	reg_rquant_yclut_1_2 : // unsigned , RW, default = 1
6: 4	R/W	0	reg_rquant_yclut_1_1 : // unsigned , RW, default = 0
2: 0	R/W	0	reg_rquant_yclut_1_0 : // unsigned , RW, default = 0

Table 10-444 DI_AFBCE1_YUV_FORMAT_CONV_MODE 0x20db

Bit(s)	R/W	Default	Description
6: 4	R/W	0	reg_444to422_mode : // unsigned , RW, default = 0
2: 0	R/W	0	reg_422to420_mode : // unsigned , RW, default = 0

Table 10-445 DI_AFBCE1_DUMMY_DATA 0x20dc

Bit(s)	R/W	Default	Description
29: 0	R/W	0	reg_dummy_data : // unsigned , default = 0 ,bit[9:0] v bit[19:10] U bit[29:20] Y

Table 10-446 DI_AFBCE1_CLR_FLAG 0x20dd

Bit(s)	R/W	Default	Description
2	R/W	0	frm_din_end_clr : // unsigned, default = 0 ;
1	R/W	0	enc_error_clr : // unsigned, default = 0 ;
0	R/W	0	frm_end_clr : // unsigned, default = 0 ;

Amlogic Proprietary and Confidential
Copyright © Amlogic. All rights reserved.

Table 10-447 DI_AFBCE1_STA_FLAGT 0x20de

Bit(s)	R/W	Default	Description
31:28	R.O	0	reverse
27	R.O	0	ro_init_end_flag;//init phas end
26	R.O	0	ro_din_frm_end_flag;//data din finished
25:24	R.O	0	enc_st 0:idle 1:enc 2:hold 3:wait
23:21	R.O	0	emit_st 0:idle 1:tx_bcrot 2:tx_bc_lev 3:tx_zcd 4:tx_tree 5:tx_uncmp 6:tx_redu 7:tx_check
20:15	R.O	0	ro_cmd2bresp_cnt: // unsigned, RO,default = 0 ;
14:9	R.O	0	ro_enc2body_cnt: // unsigned, RO,default = 0 ;
8:3	R.O	0	ro_cmd2wd_cnt: // unsigned, RO,default = 0 ;
2	R.O	0	ro_wr_abort_flag: // unsigned, RO,default = 0 ;
1	R.O	0	ro_enc_error_flag: // unsigned, RO,default = 0 ;
0	R.O	0	ro_frm_end_flag: // unsigned, RO,default = 0 ;

Table 10-448 DI_AFBCE1_MMU_NUM 0x20df

Bit(s)	R/W	Default	Description
15: 0	R.O	0	ro_frm_mmu_num : // unsigned, RO, default = 0 ,mmu addr have been used in a frame

Table 10-449 DI_AFBCE1_MMU_RMIF_CTRL1 0x20e0

Bit(s)	R/W	Default	Description
25:24	R/W	0	reg_sync_sel : // unsigned , default = 0, axi canvas id sync with frm rst
23:16	R/W	0	reg_canvas_id : // unsigned , default = 0, axi canvas id num
14:12	R/W	1	reg_cmd_intr_len : // unsigned , default = 1, interrupt send cmd when how many series axi cmd, 0 =12 1=16 2=24 3=32 4=40 5=48 6=56 7=64
11:10	R/W	1	reg_cmd_req_size : // unsigned , default = 1, how many room fifo have, then axi send series req, 0=16 1=32 2=24 3=64
9:8	R/W	2	reg_burst_len : // unsigned , default = 2, burst type: 0-single 1-bst2 2-bst4
7	R/W	0	reg_swap_64bit : // unsigned , default = 0, 64bits of 128bit swap enable
6	R/W	0	reg_little_endian : // unsigned , default = 0, big endian enable
5	R/W	0	reg_y_rev : // unsigned , default = 0, vertical reverse enable

Amlogic Proprietary and Confidential
Copyright © Amlogic. All rights reserved.

Bit(s)	R/W	Default	Description
4	R/W	0	reg_x_rev : // unsigned , default = 0, horizontal reverse enable
2:0	R/W	3	reg_pack_mode : // unsigned , default = 3, 0:4bit 1:8bit 2:16bit 3:32bit 4:64bit 5:128bit

Table 10-450 DI_AFBCE1_MMU_RMIF_CTRL2 0x20e1

Bit(s)	R/W	Default	Description
31:30	R/W	0	reg_sw_rst : // unsigned , default = 0,
23:18	R/W	0x0	reg_gclk_ctrl :
16:0	R/W	0	reg_urgent_ctrl : // unsigned , default = 0, urgent control reg : 16 reg_ugt_init : urgent initial value 15 reg_ugt_en : urgent enable 14 reg_ugt_type : 1= wrmif 0= rdmif 7 :4 reg_ugt_top_th: urgent top threshold 3 :0 reg_ugt_bot_th: urgent bottom threshold

Table 10-451 DI_AFBCE1_MMU_RMIF_CTRL3 0x20e2

Bit(s)	R/W	Default	Description
16	R/W	1	reg_acc_mode : // unsigned , default = 1,
12:0	R/W	4096	reg_stride : // unsigned , default = 4096,

Table 10-452 DI_AFBCE1_MMU_RMIF_CTRL4 0x20e3

Bit(s)	R/W	Default	Description
31:0	R/W	0	reg_baddr : // unsigned , default = 0, reg_mmu_baddr

Table 10-453 DI_AFBCE1_MMU_RMIF_SCOPE_X 0x20e4

Bit(s)	R/W	Default	Description
28:16	R/W	4095	reg_x_end : // unsigned , default = 4095, the canvas hor end pixel position
12: 0	R/W	0	reg_x_start : // unsigned , default = 0, the canvas hor start pixel position

Table 10-454 DI_AFBCE1_MMU_RMIF_SCOPE_Y 0x20e5

Bit(s)	R/W	Default	Description
28:16	R/W	0	reg_y_end : // unsigned , default = 0, the canvas ver end pixel position
12: 0	R/W	0	reg_y_start : // unsigned , default = 0, the canvas ver start pixel positio

Table 10-455 DI_AFBCE1_MMU_RMIF_RO_STAT 0x20e6

Bit(s)	R/W	Default	Description
15:0	R/W	0x0	reg_status : // unsigned , reg_status

Amlogic Proprietary and Confidential
Copyright © Amlogic. All rights reserved.

Table 10-456 DI_AFBCE1_PIP_CTRL 0x20ea

Bit(s)	R/W	Default	Description
2	R/W		reg_enc_align_en : //unsigned , RW,default = 1,
1	R/W		reg_pip_ini_ctrl : //unsigned , RW,default = 0,
0	R/W		reg_pip_mode : //unsigned , RW,default = 0,

Table 10-457 DI_AFBCE1_ROT_CTRL 0x20eb

Bit(s)	R/W	Default	Description
4	R.O	0	reg_rot_en : //unsigned , RW,default = 0, rotation enable
3:0	R/W	8	reg_vstep : //unsigned , RW,default = 8, rotation vstep ,setting acorrding rotation shrink mode

Table 10-458 DI_AFBCE1_DIMM_CTRL 0x20ec

Bit(s)	R/W	Default	Description
31	R/W	0	reg_dimm_layer_en : //unsigned , RW,default = 0,dimm_layer enable signal
29:0	R/W	0x0008-0200	reg_dimm_data : //unsigned , RW,default = 29'h00080200,dimm_layer data

Table 10-459 DI_AFBCE1_BND_DEC_MISC 0x20ed

Bit(s)	R/W	Default	Description
27:26	R/W	0	bnd_dec_rev_mode : //unsigned , RW,default = 0 only pip mode use those bits, ususaly don't need configure
25:24	R/W	3	bnd_dec_mif_urgent : //unsigned , RW,default = 3 only pip mode use those bits, ususaly don't need configure
23:22	R/W	2	bnd_dec_burst_len : //unsigned , RW,default = 2 only pip mode use those bits, ususaly don't need configure
21:20	R/W	1	bnd_dec_ddr_blk_size : //unsigned , RW,default = 1 only pip mode use those bits,ususaly don't need configure
18:16	R/W	3	bnd_dec_cmd_blk_size : //unsigned , RW,default = 3 only pip mode use those bits,ususaly don't need configure
14	R/W	0	bnd_dec_blk_mem_mode : //unsigned , RW,default = 0 only pip mode use those bits,ususaly don't need configure
13	R/W	1	bnd_dec_addr_link_en : //unsigned , RW,default = 1 only pip mode use those bits,ususaly don't need configure
12	R/W	0	bnd_dec_always_body_rden : //unsigned , RW,default = 0 only pip mode use those bits,ususaly don't need configure
11:0	R/W	128	bnd_dec_mif_lbuf_depth : //unsigned , RW,default = 128 only pip mode use those bits,ususaly don't need configure

Amlogic Proprietary and Confidential
Copyright © Amlogic. All rights reserved.

10.2.3.4 VIU Top-Level Registers

Register Address

- VIU_SW_RESET 0xff006804
- VIU_SW_RESET0 0xff006808
- VIU_MISC_CTRL0 0xff006818
- VIU_MISC_CTRL1 0xff00681c
- VIUB_SW_RESET 0xff008004
- VIUB_SW_RESET0 0xff008008
- DI_AFBCE_CTRL 0xff00800c
- VIUB_MISC_CTRL0 0xff008018
- VIUB_GCLK_CTRL0 0xff00801c
- VIUB_GCLK_CTRL2 0xff008024
- VIUB_GCLK_CTRL3 0xff008028
- DI_DBG_CTRL 0xff00802c
- DI_DBG_CTRL1 0xff008030
- DI_DBG_SRDY_INF 0xff008034
- DI_DBG_RRDY_INF 0xff008038

Register Description

Table 10-460 VIU_SW_RESET 0x1A01

Bit(s)	R/W	Default	Description
31	R/W	0	Osd1 afbcd reset
30	R/W	0	hist_spl reset
29	R/W	0	Ldim stts reset
8	R/W	0	Vd2 Dos afbcd reset
7	R/W	0	vpp_reset
6	R/W	0	di_dsr1to2_reset
5	R/W	0	vd2_fmt_reset
4	R/W	0	vd2_reset
3	R/W	0	vd1_fmt_reset
2	R/W	0	vd1_reset
1	R/W	0	osd2_reset
0	R/W	0	osd1_reset

Table 10-461 VIU_SW_RESET0 0x1A02

Bit(s)	R/W	Default	Description
2	R/W	0	Vd1 Dos afbcd reset

Amlogic Proprietary and Confidential
Copyright © Amlogic. All rights reserved.

Table 10-462 VIU_MISC_CTRL0 0x1a06

Bit(s)	R/W	Default	Description
17	R/W	0	Vdin0_wr_out_ctrl : 0: nr_inp to vdin 1: vdin wr dout
16	R/W	0	Afbc_inp_sel : 0: mif to INP 1: afbc to INP
16	R/W	0	di_mif0_en: vd1(afbc) to di post(if0) enable
8	R/W	0	vsync_int_ctrl : default = 0
6:5	R/W	2	0: close mif data 1: mif to tfbf_downscale: 2: mif to nr , 3: mif to tfbf_downscale & NR
4	R/W		Vpp_di_mif0_sel 0:buf0_data from di_mif0 1: buf0_data from din_post_din
0	R/W	0	scan_reg : default = 0

Table 10-463 VIU_MISC_CTRL1 0x1A07

Bit(s)	R/W	Default	Description
27-22	R/W	0	afbc gate clk ctrl
15:14	R/W	0	Mali afbcd clock gate control
12	R/W	0	Osd1 axi bus select 1 : select mali afbcd 0 : normal osd1
11:8	R/W	0	di_mad_en: di post to vpp enable
7-2	R/W	0	Afbcd2 Clock gate control
1	R/W	0	1 : connect dos afbcd2 to vpp vd1, 0 : connect mif to vpp vd1
0	R/W	0	1 : Dos afbcd2 output to di ; 0 : dos afbcd2 output to vpp

Table 10-464 VIUB_SW_RESET 0x2001

Bit(s)	R/W	Default	Description
17	R/W	0	Vd_afbcd m5 reset
16	R/W	0	Vd_afbcd m4 reset
15	R/W	0	Vd_afbcd m3 reset
14	R/W	0	Vd_afbcd m2 reset
13	R/W	0	Vd_afbcd m1 reset
12	R/W	0	Vd_afbcd m0 reset
4	R/W	0	Nr top reset
3	R/W	0	Di axi register reset
2	R/W	0	Di axi reset
0	R/W	0	Di top reset

Amlogic Proprietary and Confidential
Copyright © Amlogic. All rights reserved.

Table 10-465 DI_AFBCE_CTRL 0x2003

Bit(s)	R/W	Default	Description
31	R/W	0	inp_2vdin_sel : 1: inp mif to VDIN

Table 10-466 VIUB_MISC_CTRL0 0x2006

Bit(s)	R/W	Default	Description
17	R/W	0	input2pre enable: 1->di inp data from vdin0 0->di inp data from inp_afbc(see bit16)
16	R/W	0	AFBC_INP_SEL: 1->di inp_afbc data from afbc 0->di inp_afbc data from inp mif(ddr)
6:5	R/W	0	0:mask input 1:buf_data ->nr_dscale 2: buf_data->NR 3: buf_data->nr_dscale
4	R/W	0	0:post_din to buf 1: di_mif0 -> buf
3-2	R/W	0	Fix_disable:dein_wr_mif
1-0	R/W	0	Fix_disable: di_nr_wr_mif

Table 10-467 VIUB_GCLK_CTRL0 0x2007

Bit(s)	R/W	Default	Description
17:16	R/W	0	di arbiter gate clock
15	R/W	0	Di_gate_all,for old di
14	R/W	1	Di_no_clk_gate,for old di
9	R/W	0	Mad post clock enable,from mad clock
8	R/W	0	Mad pre clock enable,from mad clock
7:1	R/W		reserved

Table 10-468 VIUB_GCLK_CTRL2 0x2009

Bit(s)	R/W	Default	Description
31-14	R/W	0	reserved
19-18	R/W	0	XLR
17-16	R/W	0	CUE blend
15-14	R/W	0	tfbf
13-12	R/W	0	mcdi clock gate ctrl 2’b00: gate clock ,2’b01: close clock,2’b1x: always clock
11:10	R/W	0	Nr blend clock gate ctrl 2’b00: gate clock ,2’b01: close clock,2’b1x: always clock
9-8	R/W	0	Dnr clock gate ctrl 2’b00: gate clock ,2’b01: close clock,2’b1x: always clock
7-6	R/W	0	nning clock gate ctrl 2’b00: gate clock ,2’b01: close clock,2’b1x: always clock
5-4	R/W	0	Mtn det clock gate ctrl 2’b00: gate clock ,2’b01: close clock,2’b1x: always clock
3-2	R/W	0	pd clock gate ctrl 2’b00: gate clock ,2’b01: close clock,2’b1x: always clock
1-0	R/W	0	Nr clock gate ctrl 2’b00: gate clock ,2’b01: close clock,2’b1x: always clock

Amlogic Proprietary and Confidential
Copyright © Amlogic. All rights reserved.

Table 10-469 VIUB_GCLK_CTRL3 0x200a

Bit(s)	R/W	Default	Description
31-6	R/W	0	Reserved
5-4	R/W	0	Ei clock gate ctrl 2'b00: gate clock ,2'b01: close clock,2'b1x: always clock
3-2	R/W	0	Ei_0 clock gate ctrl 2'b00: gate clock ,2'b01: close clock,2'b1x: always clock
1-0	R/W	0	Di blend clock gate ctrl 2'b00: gate clock ,2'b01: close clock,2'b1x: always clock

Table 10-470 DI_DBG_CTRL 0x200B

Bit(s)	R/W	Default	Description
31:7	R/W	0	Reserved
6	R/W	0	go_field_sel : 1: post_frame_rst 0: pre_frame_rst
5:0	R/W	0	Debug_sel : 0:diwr_out_mif 1: mtn1_din 2:mtn1_dout 3:nrdm_bld 4:dnr_dm 5:dnr_din 6:ds_dout 7:ds_din 8:deband_din 9:me_mtn 10:mc_info_mif 11:me_din_pipe 12:buf1_dout 13:mem2post 14:cont_buf 15:nr_wr_out 16:mtn_din 17:me_din 18:nr_din 19:dnr_out 20:nr_out 21:contp_mif 22:chan2 23:di_inp_mif 24:di_mem_mif 25:contp2_mif 26:contp_mif 27:chan2_mif 28:di_inp 29:di_mem 30:mcinfo_pipe 31:mad_dout 32:deint_pipe 33:mtnp_mif 34:blend_1_dout 35:blend_buf1_din 36:direct_mux 37:ei_fifo_dout 38:di_buf0 39:mif_mtnp 40:buf2_pipe 41:buf1_pipe 42:mcvec_pipe 43:buf0_pipe

Amlogic Proprietary and Confidential
Copyright © Amlogic. All rights reserved.

Table 10-471 DI_DBG_CTRL1 0x200C

Bit(s)	R/W	Default	Description
31:16	R/W	0	Rrdy_to_srdy_max_num
15:0	R/W	0	Srdy_to_rrdy_max_num

Table 10-472 DI_DBG_SRDY_INF 0x200D

Bit(s)	R/W	Default	Description
31:16	RO	0	wait_rrdy_bmax_dbg_cnt
15:0	RO	0	Srdy_to_rrdy_dbg_cnt

Table 10-473 DI_DBG_RRDY_INF 0x200E

Bit(s)	R/W	Default	Description
31:16	RO	0	Wait_srdy_bmax_dbg_cnt
15:0	RO	0	Rrdy_to_srdy_dbg_cnt

10.2.3.5 DI_AXI_ARB Registers

Register Address

- DI_RDARB_MODE_L1C1 0xff008140
- DI_RDARB_REQEN_SLV_L1C1 0xff008144
- DI_RDARB_WEIGH0_SLV_L1C1 0xff008148
- DI_RDARB_WEIGH1_SLV_L1C1 0xff00814c
- DI_WRARB_MODE_L1C1 0xff008150
- DI_WRARB_REQEN_SLV_L1C1 0xff008154
- DI_WRARB_WEIGH0_SLV_L1C1 0xff008158
- DI_WRARB_WEIGH1_SLV_L1C1 0xff00815c
- DI_RDWR_ARB_STATUS_L1C1 0xff008160
- DI_ARB_DBG_CTRL_L1C1 0xff008164
- DI_ARB_DBG_STAT_L1C1 0xff008168
- DI_RDARB_UGT_L1C1 0xff00816c
- DI_RDARB_LIMT0_L1C1 0xff008170
- DI_WRARB_UGT_L1C1 0xff008174
- DI_SUB_RDARB_MODE 0xff00df00
- DI_SUB_RDARB_REQEN_SLV 0xff00df04
- DI_SUB_RDARB_WEIGH0_SLV 0xff00df08
- DI_SUB_RDARB_WEIGH1_SLV 0xff00df0c
- DI_SUB_RDARB_UGT 0xff00df10
- DI_SUB_RDARB_LIMT0 0xff00df14
- DI_SUB_WRARB_MODE 0xff00df18
- DI_SUB_WRARB_REQEN_SLV 0xff00df1c

Amlogic Proprietary and Confidential
Copyright © Amlogic. All rights reserved.

- DI_SUB_WRARB_WEIGH0_SLV 0xff00df20
- DI_SUB_WRARB_WEIGH1_SLV 0xff00df24
- DI_SUB_WRARB_UGT 0xff00df28
- DI_SUB_RDWR_ARB_STATUS 0xff00df2c
- DI_SUB_ARB_DBG_CTRL 0xff00df30
- DI_SUB_ARB_DBG_STAT 0xff00df34
- CONTRD_CTRL1 0xff00df40
- CONTRD_CTRL2 0xff00df44
- CONTRD_SCOPE_X 0xff00df48
- CONTRD_SCOPE_Y 0xff00df4c
- CONTRD_RO_STAT 0xff00df50
- CONT2RD_CTRL1 0xff00df54
- CONT2RD_CTRL2 0xff00df58
- CONT2RD_SCOPE_X 0xff00df5c
- CONT2RD_SCOPE_Y 0xff00df60
- CONT2RD_RO_STAT 0xff00df64
- MTNRD_CTRL1 0xff00df68
- MTNRD_CTRL2 0xff00df6c
- MTNRD_SCOPE_X 0xff00df70
- MTNRD_SCOPE_Y 0xff00df74
- MTNRD_RO_STAT 0xff00df78
- MCVECRD_CTRL1 0xff00df7c
- MCVECRD_CTRL2 0xff00df80
- MCVECRD_SCOPE_X 0xff00df84
- MCVECRD_SCOPE_Y 0xff00df88
- MCVECRD_RO_STAT 0xff00df8c
- MCINFRD_CTRL1 0xff00df90
- MCINFRD_CTRL2 0xff00df94
- MCINFRD_SCOPE_X 0xff00df98
- MCINFRD_SCOPE_Y 0xff00df9c
- MCINFRD_RO_STAT 0xff00dfa0
- CONTWR_X 0xff00dfa4
- CONTWR_Y 0xff00dfa8
- CONTWR_CTRL 0xff00dfac
- CONTWR_CAN_SIZE 0xff00dfb0
- MTNWR_X 0xff00dfb4
- MTNWR_Y 0xff00dfb8
- MTNWR_CTRL 0xff00dfbc
- MTNWR_CAN_SIZE 0xff00dfc0
- MCVECWR_X 0xff00dfc4
- MCVECWR_Y 0xff00dfc8
- MCVECWR_CTRL 0xff00dfcc
- MCVECWR_CAN_SIZE 0xff00dfd0
- MCINFWR_X 0xff00dfd4

Amlogic Proprietary and Confidential
Copyright © Amlogic. All rights reserved.

- MCINFWR_Y 0xff00dfd8
- MCINFWR_CTRL 0xff00dfdc
- MCINFWR_CAN_SIZE 0xff00dfe0

Register Description

Table 10-474 DI_RDARB_MODE_L1C1 0x2050

Bit(s)	R/W	Default	Description
21:16	R/W	0	rdarb_sel : uns, default = 0 , rdarb_sel [0]==0 slave dc0 connect master port0 rdarb_sel[0]==1 slave dc0 connect master port1 rdarb_sel [1]==0 slave dc1 connect master port0 rdarb_sel[1]==1 slave dc1 connect master port1 rdarb_sel [2]==0 slave dc2 connect master port0 rdarb_sel[2]==1 slave dc2 connect master port1 rdarb_sel [3]==0 slave dc3 connect master port0 rdarb_sel[3]==1 slave dc3 connect master port1 rdarb_sel [4]==0 slave dc4 connect master port0 rdarb_sel [4]==1 slave dc4 connect master port1 rdarb_sel [5]==0 slave dc5 connect master port0 rdarb_sel[5]==1 slave dc5 connect master port1
9:8	R/W	0	rdarb_arb_mode : uns, default = 0 , rdarb_arb_mode [0] master port0 arb way, rdarb_arb_mode [1] master port1 arb way,
3:0	R/W	0	rdarb_gate_clk_ctrl : uns, default = 0 , rdarb_gate_clk_ctrl [1:0] master port0 clk gate control rdarb_gate_clk_ctrl [3:2] master port1 clk gate control

Table 10-475 DI_RDARB_REQEN_SLV_L1C1 0x2051

Bit(s)	R/W	Default	Description
11:0	R/W	0xfff	rdarb_dc_req_en : unsigned , default = 12'hfff rdarb_dc_req_en [0]: the slv0 req to mst port0 enable, rdarb_dc_req_en [1]: the slv1 req to mst port0 enable, rdarb_dc_req_en [2]: the slv2 req to mst port0 enable, rdarb_dc_req_en [3]: the slv3 req to mst port0 enable, rdarb_dc_req_en [4]: the slv4 req to mst port0 enable, rdarb_dc_req_en [5]: the slv5 req to mst port0 enable, rdarb_dc_req_en [6]: the slv0 req to mst port1 enable, rdarb_dc_req_en [7]: the slv1 req to mst port1 enable, rdarb_dc_req_en [8]: the slv2 req to mst port1 enable, rdarb_dc_req_en [9]: the slv3 req to mst port1 enable, rdarb_dc_req_en [10]: the slv4 req to mst port1 enable, rdarb_dc_req_en [11]: the slv5 req to mst port1 enable,

Table 10-476 DI_RDARB_WEIGH0_SLV_L1C1 0x2052

Bit(s)	R/W	Default	Description
29:0	R/W	0	rddc_weigh_sxn : unsigned , default = 0 rddc_weigh_sxn [0*6+:6]: the slv0 req weigh number rddc_weigh_sxn [1*6+:6]: the slv1 req weigh number rddc_weigh_sxn [2*6+:6]: the slv2 req weigh number rddc_weigh_sxn [3*6+:6]: the slv3 req weigh number rddc_weigh_sxn [4*6+:6]: the slv4 req weigh number

Table 10-477 DI_RDARB_WEIGH1_SLV_L1C1 0x2053

Bit(s)	R/W	Default	Description
5:0	R/W	0	rddc_weigh_sxn : unsigned , default = 0 rddc_weigh_sxn [5*6+:6]: the slv5 req weigh number

Amlogic Proprietary and Confidential
Copyright © Amlogic. All rights reserved.

Table 10-478 DI_WRARB_MODE_L1C1 0x2054

Bit(s)	R/W	Default	Description
21:16	R/W	0	wrarb_sel : uns, default = 0 , wrarb_sel [0]==0 slave dc0 connect master port0 wrarb_sel[0]==1 slave dc0 connect master port1 wrarb_sel [1]==0 slave dc1 connect master port0 wrarb_sel[1]==1 slave dc1 connect master port1 wrarb_sel [2]==0 slave dc2 connect master port0 wrarb_sel[2]==1 slave dc2 connect master port1 wrarb_sel [3]==0 slave dc3 connect master port0 wrarb_sel[3]==1 slave dc3 connect master port1 wrarb_sel [4]==0 slave dc4 connect master port0 wrarb_sel[4]==1 slave dc4 connect master port1 wrarb_sel [5]==0 slave dc5 connect master port0 wrarb_sel[5]==1 slave dc5 connect master port1
9:8	R/W	0	wrarb_arb_mode : uns, default = 0 , wrarb_arb_mode [0] master port0 arb way, wrarb_arb_mode [1] master port1 arb way,
3:0	R/W	0	wrarb_gate_clk_ctrl : uns, default = 0 , wrarb_gate_clk_ctrl [1:0] master port0 clk gate control wrarb_gate_clk_ctrl [3:2] master port1 clk gate control

Table 10-479 DI_WRARB_REQEN_SLV_L1C1 0x2055

Bit(s)	R/W	Default	Description
11:0	R/W	0	wrarb_dc_req_en : unsigned , default = 0 wrarb_dc_req_en [0]: the slv0 req to mst port0 enable, wrarb_dc_req_en [1]: the slv1 req to mst port0 enable, wrarb_dc_req_en [2]: the slv2 req to mst port0 enable, wrarb_dc_req_en [3]: the slv3 req to mst port0 enable, wrarb_dc_req_en [4]: the slv4 req to mst port0 enable, wrarb_dc_req_en [5]: the slv5 req to mst port0 enable, wrarb_dc_req_en [0]: the slv0 req to mst port1 enable, wrarb_dc_req_en [1]: the slv1 req to mst port1 enable, wrarb_dc_req_en [2]: the slv2 req to mst port1 enable, wrarb_dc_req_en [3]: the slv3 req to mst port1 enable, wrarb_dc_req_en [4]: the slv4 req to mst port1 enable, wrarb_dc_req_en [5]: the slv5 req to mst port1 enable,

Table 10-480 DI_WRARB_WEIGH0_SLV_L1C1 0x2056

Bit(s)	R/W	Default	Description
29:0	R/W	0	wrdc_weigh_sxn : unsigned , default = 0 wrdc_weigh_sxn [0*6+:6]: the slv0 req weigh number wrdc_weigh_sxn [1*6+:6]: the slv1 req weigh number wrdc_weigh_sxn [2*6+:6]: the slv2 req weigh number wrdc_weigh_sxn [3*6+:6]: the slv3 req weigh number wrdc_weigh_sxn [4*6+:6]: the slv4 req weigh number

Table 10-481 DI_WRARB_WEIGH1_SLV_L1C1 0x2057

Bit(s)	R/W	Default	Description
5:0	R/W	0	wrdc_weigh_sxn : unsigned , default = 0 wrdc_weigh_sxn [5*6+:6]: the slv5 req weigh number

Table 10-482 DI_RDWR_ARB_STATUS_L1C1 0x2058

Bit(s)	R/W	Default	Description
3:2	R/W	0	wrarb_arb_busy : unsigned , default = 0
1:0	R/W	0	rdarb_arb_busy : unsigned , default = 0

Amlogic Proprietary and Confidential
Copyright © Amlogic. All rights reserved.

Table 10-483 DI_ARB_DBG_CTRL_L1C1 0x2059

Bit(s)	R/W	Default	Description
31:0	R/W	8	det_cmd_ctrl : unsigned , default = 8

Table 10-484 DI_ARB_DBG_STAT_L1C1 0x205a

Bit(s)	R/W	Default	Description
31:0	R/W	0	det_dbg_stat : unsigned , default = 0

Table 10-485 DI_RDARB_UGT_L1C1 0x205b

Bit(s)	R/W	Default	Description
15:0	R/W	0x0	rdarb_ugt_basic : unsigned , default = {8{2'b1}};

Table 10-486 DI_RDARB_LIMT0_L1C1 0x205c

Bit(s)	R/W	Default	Description
31:0	R/W	0x0	rdarb_req_limt_num : unsigned , default = {2{16'h3f3f}};

Table 10-487 DI_WRARB_UGT_L1C1 0x205d

Bit(s)	R/W	Default	Description
11:0	R/W	0	wrarb_ugt_basic : unsigned , default = 0

Table 10-488 DI_SUB_RDARB_MODE 0x37c0

Bit(s)	R/W	Default	Description
23:16	R/W	0	rdarb_sel : uns, default = 0 , rdarb_sel [0]==0 slave dc0 connect master port0 rdarb_sel[0]==1 slave dc0 connect master port1 rdarb_sel [1]==0 slave dc1 connect master port0 rdarb_sel[1]==1 slave dc1 connect master port1 rdarb_sel [2]==0 slave dc2 connect master port0 rdarb_sel[2]==1 slave dc2 connect master port1 rdarb_sel [3]==0 slave dc3 connect master port0 rdarb_sel[3]==1 slave dc3 connect master port1 rdarb_sel [4]==0 slave dc4 connect master port0 rdarb_sel [4]==1 slave dc4 connect master port1 rdarb_sel [5]==0 slave dc5 connect master port0 rdarb_sel[5]==1 slave dc5 connect master port1 rdarb_sel [6]==0 slave dc5 connect master port0 rdarb_sel[6]==1 slave dc6 connect master port1 rdarb_sel [7]==0 slave dc5 connect master port0 rdarb_sel[7]==1 slave dc7 connect master port1
9:8	R/W	0	rdarb_arb_mode : uns, default = 0 , rdarb_arb_mode [0] master port0 arb way, rdarb_arb_mode [1] master port1 arb way,
3:0	R/W	0	rdarb_gate_clk_ctrl : uns, default = 0 , rdarb_gate_clk_ctrl [1:0] master port0 clk gate control rdarb_gate_clk_ctrl [3:2] master port1 clk gate control

Table 10-489 DI_SUB_RDARB_REQEN_SLV 0x37c1

Bit(s)	R/W	Default	Description
15:0	R/W	0xffff	rdarb_dc_req_en : uns, default = 16'hffff , slv0~slv7 enable to mst.

Amlogic Proprietary and Confidential
Copyright © Amlogic. All rights reserved.

Table 10-490 DI_SUB_RDARB_WEIGH0_SLV 0x37c2

Bit(s)	R/W	Default	Description
29:0	R/W	0	rddc_weigh_sxn : unsigned , default = 0 rddc_weigh_sxn [0*6+:6]: the slv0 req weigh number rddc_weigh_sxn [1*6+:6]: the slv1 req weigh number rddc_weigh_sxn [2*6+:6]: the slv2 req weigh number rddc_weigh_sxn [3*6+:6]: the slv3 req weigh number rddc_weigh_sxn [4*6+:6]: the slv4 req weigh number

Table 10-491 DI_SUB_RDARB_WEIGH1_SLV 0x37c3

Bit(s)	R/W	Default	Description
17:0	R/W	0	rddc_weigh_sxn : unsigned , default = 0 rddc_weigh_sxn [0*6+:6]: the slv6 req weigh number rddc_weigh_sxn [1*6+:6]: the slv7 req weigh number rddc_weigh_sxn [2*6+:6]: the slv8 req weigh number

Table 10-492 DI_SUB_RDARB_UGT 0x37c4

Bit(s)	R/W	Default	Description
15:0	R/W	0x0	rdarb_ugt_basic : unsigned , default = {8'{2'h1}} rdarb_ugt_basic [0*1+:2]: 00 : use auto fifo arugt generate the output arugt. 01 : use the register bit control 10 : use the input arguen rdarb_ugt_basic [1*2+:2]: 00 : use auto fifo arugt generate the output arugt. 01 : use the register bit control 10 : use the input arguen rdarb_ugt_basic [2*2+:2]: 00 : use auto fifo arugt generate the output arugt. 01 : use the register bit control 10 : use the input arguen rdarb_ugt_basic [3*2+:2]: 00 : use auto fifo arugt generate the output arugt. 01 : use the register bit control 10 : use the input arguen rdarb_ugt_basic [4*2+:2]: 00 : use auto fifo arugt generate the output arugt. 01 : use the register bit control 10 : use the input arguen rdarb_ugt_basic [5*2+:2]: 00 : use auto fifo arugt generate the output arugt. 01 : use the register bit control 10 : use the input arguen rdarb_ugt_basic [6*2+:2]: 00 : use auto fifo arugt generate the output arugt. 01 : use the register bit control 10 : use the input arguen rdarb_ugt_basic [7*2+:2]: 00 : use auto fifo arugt generate the output arugt. 01 : use the register bit control 10 : use the input arguen

Table 10-493 DI_SUB_RDARB_LIMT0 0x37c5

Bit(s)	R/W	Default	Description
31:0	R/W	0x0	rdarb_req_limt_num : unsigned , default = {2{16'h3f3f}}

Table 10-494 DI_SUB_WRARB_MODE 0x37c6

Bit(s)	R/W	Default	Description
21:16	R/W	0	wrarb_sel : uns, default = 0 , wrarb_sel [0]==0 slave dc0 connect master port0 wrarb_sel[0]==1 slave dc0 connect master port1 wrarb_sel [1]==0 slave dc1 connect master port0 wrarb_sel[1]==1 slave dc1 connect master port1 wrarb_sel [2]==0 slave dc2 connect master port0 wrarb_sel[2]==1 slave dc2 connect master port1 wrarb_sel [3]==0 slave dc3 connect master port0 wrarb_sel[3]==1 slave dc3 connect master port1 wrarb_sel [4]==0 slave dc4 connect master port0 wrarb_sel[4]==1 slave dc3 connect master port1 wrarb_sel [5]==0 slave dc5 connect master port0 wrarb_sel[5]==1 slave dc3 connect master port1
8	R/W	0	wrarb_arb_mode : uns, default = 0 , wrarb_arb_mode[0] master port0 arb way,
1:0	R/W	0	wrarb_gate_clk_ctrl : uns, default = 0 , wrarb_gate_clk_ctrl[1:0] master port0 clk gate control

Amlogic Proprietary and Confidential
Copyright © Amlogic. All rights reserved.

Table 10-495 DI_SUB_WRARB_REQEN_SLV 0x37c7

Bit(s)	R/W	Default	Description
5:0	R/W	0	wrarb_dc_req_en : unsigned , default = 0 wrarb_dc_req_en [0]: the slv0 req to mst port0 enable, wrarb_dc_req_en [1]: the slv1 req to mst port0 enable, wrarb_dc_req_en [2]: the slv2 req to mst port0 enable, wrarb_dc_req_en [0]: the slv0 req to mst port1 enable, wrarb_dc_req_en [1]: the slv1 req to mst port1 enable, wrarb_dc_req_en [2]: the slv2 req to mst port1 enable,

Table 10-496 DI_SUB_WRARB_WEIGH0_SLV 0x37c8

Bit(s)	R/W	Default	Description
29:0	R/W	0	wrdc_weigh_sxn : unsigned , default = 0 wrdc_weigh_sxn [0*6+:6]: the slv0 req weigh number wrdc_weigh_sxn [1*6+:6]: the slv1 req weigh number wrdc_weigh_sxn [2*6+:6]: the slv2 req weigh number wrdc_weigh_sxn [3*6+:6]: the slv3 req weigh number wrdc_weigh_sxn [4*6+:6]: the slv4 req weigh number

Table 10-497 DI_SUB_WRARB_WEIGH1_SLV 0x37c9

Bit(s)	R/W	Default	Description
5:0	R/W	0	wrdc_weigh_sxn : unsigned , default = 0 the slv5 req weigh number

Table 10-498 DI_SUB_WRARB_UGT 0x37ca

Bit(s)	R/W	Default	Description
11:0	R/W	0x0	rdarb_ugt_basic : unsigned , default = {8'{2'h1}} rdarb_ugt_basic [0*1+:2]: 00 : use auto fifo arugt generate the output arugt. 01 : use the register bit control 10 : use the input arguen rdarb_ugt_basic [1*2+:2]: 00 : use auto fifo arugt generate the output arugt. 01 : use the register bit control 10 : use the input arguen rdarb_ugt_basic [2*2+:2]: 00 : use auto fifo arugt generate the output arugt. 01 : use the register bit control 10 : use the input arguen rdarb_ugt_basic [3*2+:2]: 00 : use auto fifo arugt generate the output arugt. 01 : use the register bit control 10 : use the input arguen rdarb_ugt_basic [4*2+:2]: 00 : use auto fifo arugt generate the output arugt. 01 : use the register bit control 10 : use the input arguen rdarb_ugt_basic [5*2+:2]: 00 : use auto fifo arugt generate the output arugt. 01 : use the register bit control 10 : use the input arguen

Table 10-499 DI_SUB_RDWR_ARB_STATUS 0x37cb

Bit(s)	R/W	Default	Description
2	R.O	0	ro_wrarb_arb_busy : unsigned , default = 0
1	R/W	0x0	reserve :
0	R.O	0	ro_rdarb_arb_busy : unsigned , default = 0

Table 10-500 DI_SUB_ARB_DBG_CTRL 0x37cc

Bit(s)	R/W	Default	Description
31:0	R.O	0	ro_det_cmd_ctrl : unsigned , default = 0

Amlogic Proprietary and Confidential
Copyright © Amlogic. All rights reserved.

Table 10-501 DI_SUB_ARB_DBG_STAT 0x37cd

Bit(s)	R/W	Default	Description
31:0	R.O	0	ro_det_dbg_stat : unsigned , default = 0

10.2.3.6 DI_SUB_MIF Registers

Register Address

- CONTRD_CTRL1 0xff00df40
- CONTRD_CTRL2 0xff00df44
- CONTRD_SCOPE_X 0xff00df48
- CONTRD_SCOPE_Y 0xff00df4c
- CONTRD_RO_STAT 0xff00df50
- CONT2RD_CTRL1 0xff00df54
- CONT2RD_CTRL2 0xff00df58
- CONT2RD_SCOPE_X 0xff00df5c
- CONT2RD_SCOPE_Y 0xff00df60
- CONT2RD_RO_STAT 0xff00df64
- MTNRD_CTRL1 0xff00df68
- MTNRD_CTRL2 0xff00df6c
- MTNRD_SCOPE_X 0xff00df70
- MTNRD_SCOPE_Y 0xff00df74
- MTNRD_RO_STAT 0xff00df78
- MCVECRD_CTRL1 0xff00df7c
- MCVECRD_CTRL2 0xff00df80
- MCVECRD_SCOPE_X 0xff00df84
- MCVECRD_SCOPE_Y 0xff00df88
- MCVECRD_RO_STAT 0xff00df8c
- MCINFRD_CTRL1 0xff00df90
- MCINFRD_CTRL2 0xff00df94
- MCINFRD_SCOPE_X 0xff00df98
- MCINFRD_SCOPE_Y 0xff00df9c
- MCINFRD_RO_STAT 0xff00dfa0
- CONTWR_X 0xff00dfa4
- CONTWR_Y 0xff00dfa8
- CONTWR_CTRL 0xff00dfac
- CONTWR_CAN_SIZE 0xff00dfb0
- MTNWR_X 0xff00dfb4
- MTNWR_Y 0xff00dfb8
- MTNWR_CTRL 0xff00dfbc
- MTNWR_CAN_SIZE 0xff00dfc0
- MCVECWR_X 0xff00dfc4
- MCVECWR_Y 0xff00dfc8

Amlogic Proprietary and Confidential
Copyright © Amlogic. All rights reserved.

- MCVECWR_CTRL 0xff00dfcc
- MCVECWR_CAN_SIZE 0xff00dfd0
- MCINFWR_X 0xff00dfd4
- MCINFWR_Y 0xff00dfd8
- MCINFWR_CTRL 0xff00dfdc
- MCINFWR_CAN_SIZE 0xff00dfe0
- NRDSWR_X 0xff00dfe4
- NRDSWR_Y 0xff00dfe8
- NRDSWR_CTRL 0xff00dfec
- NRDSWR_CAN_SIZE 0xff00dff0
- CONTRD_BADDR 0xff00dca4
- CONT2RD_BADDR 0xff00dca8
- MTNRD_BADDR 0xff00dcac
- MCVECRD_BADDR 0xff00dcb0
- MCINFRD_BADDR 0xff00dcb4
- CONTWR_BADDR 0xff00dcd0
- CONTWR_STRIDE 0xff00dcd4
- MTNWR_BADDR 0xff00dcd8
- MTNWR_STRIDE 0xff00dcdc
- MCVECWR_BADDR 0xff00dcb8
- MCVECWR_STRIDE 0xff00dcbc
- MCINFWR_BADDR 0xff00df38
- MCINFWR_STRIDE 0xff00df3c
- NRDSWR_BADDR 0xff00dff4
- NRDSWR_STRIDE 0xff00dff8

Register Description

Table 10-502 CONTRD_CTRL1 0x37d0

Bit(s)	R/W	Default	Description
31:30	R/W	0	reg_sw_rst : unsigned, default = 0
29:26	R/W	0	Reg_gclk_ctrl[3:0]
25:24	R/W	0	reg_sync_sel : unsigned, default = 0
23:16	R/W	0	reg_canvas_id : unsigned, default = 0
14:12	R/W	1	reg_cmd_intr_len : unsigned, default = 1
11:10	R/W	1	reg_cmd_req_size : unsigned, default = 1
9:8	R/W	2	reg_burst_len : unsigned, default = 2
7	R/W	0	reg_swap_64bit : unsigned, default = 0
6	R/W	0	reg_little_endian : unsigned, default = 0
5	R/W	0	reg_y_rev : unsigned, default = 0
4	R/W	0	reg_x_rev : unsigned, default = 0

Amlogic Proprietary and Confidential
Copyright © Amlogic. All rights reserved.

Bit(s)	R/W	Default	Description
3	R/W	1	Cntl acc mode (linear ddr mode)
2:0	R/W	1	reg_pack_mode : unsigned, default = 1

Table 10-503 CONTRD_CTRL2 0x37d1

Bit(s)	R/W	Default	Description
31:30	R/W	0	reg_gclk_ctrl[5:4] : unsigned, default = 0
23	R/W	0	urgent
22	R/W	0	auto_urgent_en
21	R/W	0	urgent_wr
20:17	R/W	0	up_th
16:13	R/W	0	dn_th
12:0	R/W	1920	Stride (128 bits)

Table 10-504 CONTRD_SCOPE_X 0x37d2

Bit(s)	R/W	Default	Description
28:16	R/W	0	reg_x_end : unsigned, default = 0
12:0	R/W	0	reg_x_start : unsigned, default = 0

Table 10-505 CONTRD_SCOPE_Y 0x37d3

Bit(s)	R/W	Default	Description
28:16	R/W	0	reg_y_end : unsigned, default = 0
12:0	R/W	0	reg_y_start : unsigned, default = 0

Table 10-506 CONTRD_RO_STAT 0x37d4

Bit(s)	R/W	Default	Description
15:0	R.O	0	ro_reg_status : unsigned, default = 0

Table 10-507 CONT2RD_CTRL1 0x37d5

Bit(s)	R/W	Default	Description
31:30	R/W	0	reg_sw_rst : unsigned, default = 0
29:26	R/W	0	Reg_gclk_ctrl[3:0]
25:24	R/W	0	reg_sync_sel : unsigned, default = 0
23:16	R/W	0	reg_canvas_id : unsigned, default = 0
14:12	R/W	1	reg_cmd_intr_len : unsigned, default = 1

Amlogic Proprietary and Confidential
Copyright © Amlogic. All rights reserved.

Bit(s)	R/W	Default	Description
11:10	R/W	1	reg_cmd_req_size : unsigned, default = 1
9:8	R/W	2	reg_burst_len : unsigned, default = 2
7	R/W	0	reg_swap_64bit : unsigned, default = 0
6	R/W	0	reg_little_endian : unsigned, default = 0
5	R/W	0	reg_y_rev : unsigned, default = 0
4	R/W	0	reg_x_rev : unsigned, default = 0
3	R/W	1	Cntl acc mode (linear ddr mode)
2:0	R/W	1	reg_pack_mode : unsigned, default = 1

Table 10-508 CONT2RD_CTRL2 0x37d6

Bit(s)	R/W	Default	Description
31:30	R/W	0	reg_gclk_ctrl[5:4] : unsigned, default = 0
23	R/W	0	urgent
22	R/W	0	auto_urgent_en
21	R/W	0	urgent_wr
20:17	R/W	0	up_th
16:13	R/W	0	dn_th
12:0	R/W	1920	Stride (128 bits)

Table 10-509 CONT2RD_SCOPE_X 0x37d7

Bit(s)	R/W	Default	Description
28:16	R/W	0	reg_x_end : unsigned, default = 0
12:0	R/W	0	reg_x_start : unsigned, default = 0

Table 10-510 CONT2RD_SCOPE_Y 0x37d8

Bit(s)	R/W	Default	Description
28:16	R/W	0	reg_y_end : unsigned, default = 0
12:0	R/W	0	reg_y_start : unsigned, default = 0

Table 10-511 CONT2RD_RO_STAT 0x37d9

Bit(s)	R/W	Default	Description
15:0	R.O	0	ro_reg_status : unsigned, default = 0

Amlogic Proprietary and Confidential
Copyright © Amlogic. All rights reserved.

Table 10-512 MTNRD_CTRL1 0x37da

Bit(s)	R/W	Default	Description
31:30	R/W	0	reg_sw_rst : unsigned, default = 0
29:26	R/W	0	Reg_gclk_ctrl[3:0]
25:24	R/W	0	reg_sync_sel : unsigned, default = 0
23:16	R/W	0	reg_canvas_id : unsigned, default = 0
14:12	R/W	1	reg_cmd_intr_len : unsigned, default = 1
11:10	R/W	1	reg_cmd_req_size : unsigned, default = 1
9:8	R/W	2	reg_burst_len : unsigned, default = 2
7	R/W	0	reg_swap_64bit : unsigned, default = 0
6	R/W	0	reg_little_endian : unsigned, default = 0
5	R/W	0	reg_y_rev : unsigned, default = 0
4	R/W	0	reg_x_rev : unsigned, default = 0
3	R/W	1	Cntl acc mode (linear ddr mode)
2:0	R/W	1	reg_pack_mode : unsigned, default = 1

Table 10-513 MTNRD_CTRL2 0x37db

Bit(s)	R/W	Default	Description
31:30	R/W	0	reg_gclk_ctrl[5:4] : unsigned, default = 0
23	R/W	0	urgent
22	R/W	0	auto_urgent_en
21	R/W	0	urgent_wr
20:17	R/W	0	up_th
16:13	R/W	0	dn_th
12:0	R/W	1920	Stride (128 bits)

Table 10-514 MTNRD_SCOPE_X 0x37dc

Bit(s)	R/W	Default	Description
28:16	R/W	0	reg_x_end : unsigned, default = 0
12:0	R/W	0	reg_x_start : unsigned, default = 0

Table 10-515 MTNRD_SCOPE_Y 0x37dd

Bit(s)	R/W	Default	Description
28:16	R/W	0	reg_y_end : unsigned, default = 0
12:0	R/W	0	reg_y_start : unsigned, default = 0

Amlogic Proprietary and Confidential
Copyright © Amlogic. All rights reserved.

Table 10-516 MTNRD_RO_STAT 0x37de

Bit(s)	R/W	Default	Description
15:0	R.O	0	ro_reg_status : unsigned, default = 0

Table 10-517 MCVECRD_CTRL1 0x37df

Bit(s)	R/W	Default	Description
31:30	R/W	0	reg_sw_rst : unsigned, default = 0
29:26	R/W	0	Reg_gclk_ctrl[3:0]
25:24	R/W	0	reg_sync_sel : unsigned, default = 0
23:16	R/W	0	reg_canvas_id : unsigned, default = 0
14:12	R/W	1	reg_cmd_intr_len : unsigned, default = 1
11:10	R/W	1	reg_cmd_req_size : unsigned, default = 1
9:8	R/W	2	reg_burst_len : unsigned, default = 2
7	R/W	0	reg_swap_64bit : unsigned, default = 0
6	R/W	0	reg_little_endian : unsigned, default = 0
5	R/W	0	reg_y_rev : unsigned, default = 0
4	R/W	0	reg_x_rev : unsigned, default = 0
3	R/W	1	Cntl acc mode (linear ddr mode)
2:0	R/W	1	reg_pack_mode : unsigned, default = 1

Table 10-518 MCVECRD_CTRL2 0x37e0

Bit(s)	R/W	Default	Description
31:30	R/W	0	reg_gclk_ctrl[5:4] : unsigned, default = 0
23	R/W	0	urgent
22	R/W	0	auto_urgent_en
21	R/W	0	urgent_wr
20:17	R/W	0	up_th
16:13	R/W	0	dn_th
12:0	R/W	1920	Stride (128 bits)

Table 10-519 MCVECRD_SCOPE_X 0x37e1

Bit(s)	R/W	Default	Description
28:16	R/W	0	reg_x_end : unsigned, default = 0
12:0	R/W	0	reg_x_start : unsigned, default = 0

Amlogic Proprietary and Confidential
Copyright © Amlogic. All rights reserved.

Table 10-520 MCVECRD_SCOPE_Y 0x37e2

Bit(s)	R/W	Default	Description
28:16	R/W	0	reg_y_end : unsigned, default = 0
12:0	R/W	0	reg_y_start : unsigned, default = 0

Table 10-521 MCVECRD_RO_STAT 0x37e3

Bit(s)	R/W	Default	Description
15:0	R.O	0	ro_reg_status : unsigned, default = 0

Table 10-522 MCINFRD_CTRL1 0x37e4

Bit(s)	R/W	Default	Description
31:30	R/W	0	reg_sw_rst : unsigned, default = 0
29:26	R/W	0	Reg_gclk_ctrl[3:0]
25:24	R/W	0	reg_sync_sel : unsigned, default = 0
23:16	R/W	0	reg_canvas_id : unsigned, default = 0
14:12	R/W	1	reg_cmd_intr_len : unsigned, default = 1
11:10	R/W	1	reg_cmd_req_size : unsigned, default = 1
9:8	R/W	2	reg_burst_len : unsigned, default = 2
7	R/W	0	reg_swap_64bit : unsigned, default = 0
6	R/W	0	reg_little_endian : unsigned, default = 0
5	R/W	0	reg_y_rev : unsigned, default = 0
4	R/W	0	reg_x_rev : unsigned, default = 0
3	R/W	1	Cntl acc mode (linear ddr mode)
2:0	R/W	1	reg_pack_mode : unsigned, default = 1

Table 10-523 MCINFRD_CTRL2 0x37e5

Bit(s)	R/W	Default	Description
31:30	R/W	0	reg_gclk_ctrl[5:4] : unsigned, default = 0
23	R/W	0	urgent
22	R/W	0	auto_urgent_en
21	R/W	0	urgent_wr
20:17	R/W	0	up_th
16:13	R/W	0	dn_th
12:0	R/W	1920	Stride (128 bits)

Amlogic Proprietary and Confidential
Copyright © Amlogic. All rights reserved.

Table 10-524 MCINFRD_SCOPE_X 0x37e6

Bit(s)	R/W	Default	Description
28:16	R/W	0	reg_x_end : unsigned, default = 0
12:0	R/W	0	reg_x_start : unsigned, default = 0

Table 10-525 MCINFRD_SCOPE_Y 0x37e7

Bit(s)	R/W	Default	Description
28:16	R/W	0	reg_y_end : unsigned, default = 0
12:0	R/W	0	reg_y_start : unsigned, default = 0

Table 10-526 MCINFRD_RO_STAT 0x37e8

Bit(s)	R/W	Default	Description
15:0	R.O	0	ro_reg_status : unsigned, default = 0

Table 10-527 CONTWR_X 0x37e9

Bit(s)	R/W	Default	Description
31:30	R/W	2	burst_len : unsigned, default = 2
29	R/W	0	rev_x : unsigned, default = 0
28:16	R/W	0	start_x : unsigned, default = 0
12:0	R/W	2	end_x : unsigned, default = 2cf

Table 10-528 CONTWR_Y 0x37ea

Bit(s)	R/W	Default	Description
31:30	R/W	0	canvas_id : unsigned, default = 0
29	R/W	0	rev_y : unsigned, default = 0
28:16	R/W	0	start_y : unsigned, default = 0
12:0	R/W	0	end_y : unsigned, default = 0x1df

Table 10-529 CONTWR_CTRL 0x37eb

Bit(s)	R/W	Default	Description
31:16	R/W	0	urgent_ctrl : unsigned, default = 0
15	R/W	0	force_wvalid : unsigned, default = 0
14	R/W	0	canvas_syncen : unsigned, default = 0
13	R/W	1	canvas_wr : unsigned, default = 1
12	R/W	0	req_en : unsigned, default = 0
10	R/W	0	clr_wrrsp : unsigned, default = 0

Amlogic Proprietary and Confidential
Copyright © Amlogic. All rights reserved.

Bit(s)	R/W	Default	Description
8	R/W	0	urgent : unsigned, default = 0
7:0	R/W	0	canvas_index : unsigned, default = 0

Table 10-530 CONTWR_CAN_SIZE 0x37ec

Bit(s)	R/W	Default	Description
30:29	R/W	0	reg_rst : unsigned, default = 0
28:16	R/W	0	hsizem1 : unsigned, default = 0x2cf
14	R/W	0	reg_reset : unsigned, default = 0
13	R/W	0	little_endian : unsigned, default = 0
12:0	R/W	0	vsizem1 : unsigned, default = 0x1df

Table 10-531 MTNWR_X 0x37ed

Bit(s)	R/W	Default	Description
31:30	R/W	2	burst_len : unsigned, default = 2
29	R/W	0	rev_x : unsigned, default = 0
28:16	R/W	0	start_x : unsigned, default = 0
12:0	R/W	2	end_x : unsigned, default = 2cf

Table 10-532 MTNWR_Y 0x37ee

Bit(s)	R/W	Default	Description
31:30	R/W	0	canvas_id : unsigned, default = 0
29	R/W	0	rev_y : unsigned, default = 0
28:16	R/W	0	start_y : unsigned, default = 0
12:0	R/W	0	end_y : unsigned, default = 0x1df

Table 10-533 MTNWR_CTRL 0x37ef

Bit(s)	R/W	Default	Description
31:16	R/W	0	urgent_ctrl : unsigned, default = 0
15	R/W	0	force_wvalid : unsigned, default = 0
14	R/W	0	canvas_syncen : unsigned, default = 0
13	R/W	1	canvas_wr : unsigned, default = 1
12	R/W	0	req_en : unsigned, default = 0
10	R/W	0	clr_wrrsp : unsigned, default = 0
8	R/W	0	urgent : unsigned, default = 0
7:0	R/W	0	canvas_index : unsigned, default = 0

Amlogic Proprietary and Confidential
Copyright © Amlogic. All rights reserved.

Table 10-534 MTNWR_CAN_SIZE 0x37f0

Bit(s)	R/W	Default	Description
30:29	R/W	0	reg_rst : unsigned, default = 0
28:16	R/W	0	hsizem1 : unsigned, default = 0x2cf
14	R/W	0	reg_reset : unsigned, default = 0
13	R/W	0	little_endian : unsigned, default = 0
12:0	R/W	0	vsizem1 : unsigned, default = 0x1df

Table 10-535 MCVECWR_X 0x37f1

Bit(s)	R/W	Default	Description
31:30	R/W	2	burst_len : unsigned, default = 2
29	R/W	0	rev_x : unsigned, default = 0
28:16	R/W	0	start_x : unsigned, default = 0
12:0	R/W	2	end_x : unsigned, default = 2cf

Table 10-536 MCVECWR_Y 0x37f2

Bit(s)	R/W	Default	Description
31:30	R/W	0	canvas_id : unsigned, default = 0
29	R/W	0	rev_y : unsigned, default = 0
28:16	R/W	0	start_y : unsigned, default = 0
12:0	R/W	0	end_y : unsigned, default = 0x1df

Table 10-537 MCVECWR_CTRL 0x37f3

Bit(s)	R/W	Default	Description
31:16	R/W	0	urgent_ctrl : unsigned, default = 0
15	R/W	0	force_wvalid : unsigned, default = 0
14	R/W	0	canvas_syncen : unsigned, default = 0
13	R/W	1	canvas_wr : unsigned, default = 1
12	R/W	0	req_en : unsigned, default = 0
10	R/W	0	clr_wrrsp : unsigned, default = 0
8	R/W	0	urgent : unsigned, default = 0
7:0	R/W	0	canvas_index : unsigned, default = 0

Amlogic Proprietary and Confidential
Copyright © Amlogic. All rights reserved.

Table 10-538 MCVECWR_CAN_SIZE 0x37f4

Bit(s)	R/W	Default	Description
30:29	R/W	0	reg_rst : unsigned, default = 0
28:16	R/W	0	hsizem1 : unsigned, default = 0x2cf
14	R/W	0	reg_reset : unsigned, default = 0
13	R/W	0	little_endian : unsigned, default = 0
12:0	R/W	0	vsizem1 : unsigned, default = 0x1df

Table 10-539 MCINFWR_X 0x37f5

Bit(s)	R/W	Default	Description
31:30	R/W	2	burst_len : unsigned, default = 2
29	R/W	0	rev_x : unsigned, default = 0
28:16	R/W	0	start_x : unsigned, default = 0
12:0	R/W	2	end_x : unsigned, default = 2cf

Table 10-540 MCINFWR_Y 0x37f6

Bit(s)	R/W	Default	Description
31:30	R/W	0	canvas_id : unsigned, default = 0
29	R/W	0	rev_y : unsigned, default = 0
28:16	R/W	0	start_y : unsigned, default = 0
12:0	R/W	0	end_y : unsigned, default = 0x1df

Table 10-541 MCINFWR_CTRL 0x37f7

Bit(s)	R/W	Default	Description
31:16	R/W	0	urgent_ctrl : unsigned, default = 0
15	R/W	0	force_wvalid : unsigned, default = 0
14	R/W	0	canvas_syncen : unsigned, default = 0
13	R/W	1	canvas_wr : unsigned, default = 1
12	R/W	0	req_en : unsigned, default = 0
10	R/W	0	clr_wrrsp : unsigned, default = 0
8	R/W	0	urgent : unsigned, default = 0
7:0	R/W	0	canvas_index : unsigned, default = 0

Amlogic Proprietary and Confidential
Copyright © Amlogic. All rights reserved.

Table 10-542 MCINFWR_CAN_SIZE 0x37f8

Bit(s)	R/W	Default	Description
30:29	R/W	0	reg_rst : unsigned, default = 0
28:16	R/W	0	hsizem1 : unsigned, default = 0x2cf
14	R/W	0	reg_reset : unsigned, default = 0
13	R/W	0	little_endian : unsigned, default = 0
12:0	R/W	0	vsizem1 : unsigned, default = 0x1df

Table 10-543 CONTRD_BADDR 0x3729

Bit(s)	R/W	Default	Description
31:0	R/W	0	Base address (ddr physical address >>4)

Table 10-544 CONT2RD_BADDR 0x372a

Bit(s)	R/W	Default	Description
31:0	R/W	0	Base address (ddr physical address >>4)

Table 10-545 MTNRD_BADDR 0x372b

Bit(s)	R/W	Default	Description
31:0	R/W	0	Base address (ddr physical address >>4)

Table 10-546 MCVECRD_BADDR 0x372c

Bit(s)	R/W	Default	Description
31:0	R/W	0	Base address (ddr physical address >>4)

Table 10-547 CONTWR_BADDR 0x3734

Bit(s)	R/W	Default	Description
31:0	R/W	0	Base address (ddr physical address >>4)

Table 10-548 CONTWR_STRIDE 0x3735

Bit(s)	R/W	Default	Description
31:0	R/W	0	Stride (128 bits)

Table 10-549 MTNWR_BADDR 0x3736

Bit(s)	R/W	Default	Description
31:0	R/W	0	Base address (ddr physical address >>4)

Amlogic Proprietary and Confidential
Copyright © Amlogic. All rights reserved.

Table 10-550 MTNWR_STRIDE 0x3737

Bit(s)	R/W	Default	Description
31:0	R/W	0	Stride (128 bits)

Table 10-551 MCVECWR_BADDR 0x372e

Bit(s)	R/W	Default	Description
31:0	R/W	0	Base address (ddr physical address >>4)

Table 10-552 MCVECWR_STRIDE 0x372f

Bit(s)	R/W	Default	Description
31:0	R/W	0	Stride (128 bits)

Table 10-553 MCINFWR_BADDR 0x37ce

Bit(s)	R/W	Default	Description
31:0	R/W	0	Base address (ddr physical address >>4)

Table 10-554 MCINFWR_STRIDE 0x37cf

Bit(s)	R/W	Default	Description
31:0	R/W	0	Stride (128 bits)

Table 10-555 NRDSWR_BADDR 0x37fd

Bit(s)	R/W	Default	Description
31:0	R/W	0	Base address (ddr physical address >>4)

Table 10-556 NRDSWR_STRIDE 0x37fe

Bit(s)	R/W	Default	Description
31:0	R/W	0	Stride (128 bits)

10.2.3.7 De-Interlace mad Registers

Register Address

- DI_TOP_PRE_CTRL 0xff005f14
- DI_TOP_POST_CTRL 0xff005f18
- DI_PRE_GL_CTRL 0xff005f1c
- DI_PRE_GL_THD 0xff005f20
- DI_POST_GL_CTRL 0xff005f24

Amlogic Proprietary and Confidential
Copyright © Amlogic. All rights reserved.

- DI_POST_GL_THD 0xff005f28
- DI_RO_PRE_DBG 0xff005f2c
- DI_RO_POST_DBG 0xff005f30
- DI_TOP_CTRL 0xff005f34
- DI_AFBCD_GCLK0 0xff005f38
- DI_AFBCD_GCLK1 0xff005f3c
- DI_RDMIF_DEPTH0 0xff005f40
- DI_RDMIF_DEPTH1 0xff005f44
- DI_RDMIF_DEPTH2 0xff005f48
- DI_TOP_CTRL1 0xff005f4c
- DI_AFBCE0_HOLD_CTRL 0xff005f50
- DI_AFBCE1_HOLD_CTRL 0xff005f54
- DI_PRE_CTRL 0xff005c00
- DI_POST_CTRL 0xff005c04
- DI_POST_SIZE 0xff005c08
- DI_PRE_SIZE 0xff005c0c
- DI_EI_CTRL0 0xff005c10
- DI_EI_CTRL1 0xff005c14
- DI_EI_CTRL2 0xff005c18
- DI_NR_CTRL1 0xff005c20
- DI_NR_CTRL2 0xff005c24
- DI_MTN_CTRL1 0xff005c30
- DI_BLEND_CTRL 0xff005c34
- DI_ARB_CTRL 0xff005c3c
- DI_BLEND_REG0_X 0xff005c40
- DI_EI_CTRL4 0xff005c68
- DI_EI_CTRL5 0xff005c6c
- DI_EI_CTRL6 0xff005c70
- DI_EI_CTRL7 0xff005c74
- DI_EI_CTRL8 0xff005c78
- DI_EI_CTRL9 0xff005c7c
- DI_MC_REG0_X 0xff005c80
- DI_MC_32LVL0 0xff005ca8
- DI_MC_32LVL1 0xff005cac
- DI_MC_22LVL0 0xff005cb0
- DI_MC_22LVL1 0xff005cb4
- DI_MC_22LVL2 0xff005cb8
- DI_MC_CTRL 0xff005cbc
- DI_INTR_CTRL 0xff005cc0
- DI_INFO_ADDR 0xff005cc4
- DI_INFO_DATA 0xff005cc8
- DI_PRE_HOLD 0xff005ccc
- DI_MTN_1_CTRL1 0xff005d00
- DI_MTN_1_CTRL2 0xff005d04

Amlogic Proprietary and Confidential
Copyright © Amlogic. All rights reserved.

- DI_MTN_1_CTRL3 0xff005d08
- DI_MTN_1_CTRL4 0xff005d0c
- DI_MTN_1_CTRL5 0xff005d10
- DI_MTN_1_CTRL6 0xff005ea4
- DI_MTN_1_CTRL7 0xff005ea8
- DI_MTN_1_CTRL8 0xff005eac
- DI_MTN_1_CTRL9 0xff005eb0
- DI_MTN_1_CTRL10 0xff005eb4
- DI_MTN_1_CTRL11 0xff005eb8
- DI_MTN_1_CTRL12 0xff005ebc
- DI_RO_CRC_NRWR 0xff005f00
- DI_RO_CRC_MTNWR 0xff005f04
- DI_RO_CRC_DEINT 0xff005f08
- DI_CRC_CHK0 0xff005f0c
- DI_RO_CRC_NRWR 0xff005f00
- DI_RO_CRC_MTNWR 0xff005f04
- DI_RO_CRC_DEINT 0xff005f08

Register Description

Table 10-557 DI_TOP_PRE_CTRL 0x17c5

Bit(s)	R/W	Default	Description
31:30	W/R	0	Pre_frm_sel : 0: frame reset by register, 0x1700 bit31 1: pre-post link (if post_frm_sel==0, pre-post-viu link) 2: pre viu link, use viu vsync as frame reset 3: pre vdin link, use vdin vsync as frame reset
29:27	W/R	0	Rdmi line buffer bypass: bit0: 1:di inp mif line buffer bypass Bit1: 1:di chan2 mif line buffer bypass Bit2: 1:di mem mif line buffer bypass
26:24	W/R	0	Afbcd0_frm_st_sel: no use
23:22	W/R	0	bit23:afbce done flag clear: clear di afbce write done flag, pulse bit22:Wrmif1 done flag clear: clear di wrmif write done flag, pulse
21:20	W/R	0	Wr_mif fix disable pre
19	W/R	0	Pre_bypass_en : 1:pre process bypass enable (example: bit19:12=0x81, di inp direct to nr write)
18:16			Pre_bypass_mode: 0: nr write select byp_din0 1: nr write select byp_din1 2: nr write select byp_din2
14:12			Pre_bypass_sel: Bit0: 1: byp_din0 select di inp Bit1: 1: byp_din1 select di chan2 Bit2: 1: byp_din2 select di mem
11	W/R	0	Reg_afbce0_awugt: 1:nr write afbce urgent enable
10	W/R	0	Nr ch0 en : 1: nr write enable(afbce or normal mif) 0: nr write disable
1:0	W/R	0	Nrwr_path_sel: bit0: normal mif path enable bit1: afbc enc enable

Amlogic Proprietary and Confidential
Copyright © Amlogic. All rights reserved.

Table 10-558 DI_TOP_POST_CTRL 0x17c6

Bit(s)	R/W	Default	Description
31:30	W/R	0	Post_frm_sel : 0: post viu link, use viu vsync as frame reset 1: frame reset by register , 0x1701 bit31 2: pre-post link, use post frame reset as pre-post total reset (default use pre-frame reset)
29:27	W/R	0	Rdmi line buffer bypass: Bit0: 1:di if1 mif line buffer bypass Bit1: 1:di if0 mif line buffer bypass Bit2: 1:di if2 mif line buffer bypass
26:24	W/R	0	Afbcd1_frm_st_sel: no use
23:22	W/R	0	bit23:afbce done flag clear: clear di write done flag,pulse bit22:Wrmif1 done flag clear: clear di write done flag,pulse
21:20	W/R	0	Wr_mif Fix disable post
19	W/R	0	Post_bypass_en : 1:post process bypass enable (example: bit19:12=0x81, di if0 direct to di write)
18:16			Post_bypass_mode: 0: di write select byp_din0 1: di write select byp_din1 2: di write select byp_din2
14:12			Post_bypass_sel: Bit0: 1: byp_din0 select di if0 Bit1: 1: byp_din1 select di if1 Bit2: 1: byp_din2 select di if2
11	W/R	0	Reg_afbce1_awugt: 1:di write afbce urgent enable
10	W/R	0	Wrmif_afbce_rdugt: afbce read urgent enable
1:0	W/R	0	diwr_path_sel: bit0: normal mif path enable bit1: afbc enc enable

Table 10-559 DI_TOP_CTRL 0x17cd

Bit(s)	R/W	Default	Description
21:4	W/R	{5,4,3,2,-1,0}	Afbcd 6mux6_sel: reorder di read mif (afbcd or normal mif)
0	W/R		Vpp path sel : 0: di post output to VPP_VD1 1: di pre output to VPP_VD1

Table 10-560 DI_TOP_CTRL1 0x17d3

Bit(s)	R/W	Default	Description
31:28	W/R		Afbc enc gate clock control bit31:30: afbce1 gatting control bit29:28: afbce0 gatting control
27	W/R		Wrmif shrink switch 0:shrink in di path 1.shrink in nr path

Amlogic Proprietary and Confidential
Copyright © Amlogic. All rights reserved.

Bit(s)	R/W	Default	Description
26:22	W/R		Soft reset: Bit4: wrmif arb reset Bit3 : nr afbc enc reset Bit2 : nr wr mif reset Bit1 : di afbc enc reset Bit0 : di wr mif reset
3	W/R		Wrmif ram switch : 1 :di can write 4k afbce 0: nr can write 4k afbce
2	W/R		Wrmif nr 4k: 1:nr/di write 4K size afbc 0:nr 1080p + di 1080 afbce
0	W/R		Wrmif_path_switch: 0: no switch 1: nr write and di write path switch□only can switch in initial state

Table 10-561 DI_AFBCE0_HOLD_CTRL 0x17d4

Bit(s)	R/W	Default	Description
31	W/R	0	Hold enable
23:12	W/R	0	Hold count
11:0	W/R	0	Pass count

Table 10-562 DI_AFBCE1_HOLD_CTRL 0x17d5

Bit(s)	R/W	Default	Description
31	W/R	0	Hold enable
23:12	W/R	0	Hold count
11:0	W/R	0	Pass count

Table 10-563 DI_RDMIF_DEPTH0 0x17d0

Bit(s)	R/W	Default	Description
27:16	W/R	512	Di chan2 rdmif line buffer depth
11:0	W/R	512	Di inp rdmif line buffer depth

Table 10-564 DI_RDMIF_DEPTH1 0x17d1

Bit(s)	R/W	Default	Description
27:16	W/R	512	Di if1 rdmif line buffer depth
11:0	W/R	512	Di mem rdmif line buffer depth

Amlogic Proprietary and Confidential
Copyright © Amlogic. All rights reserved.

Table 10-565 DI_RDMIF_DEPTH2 0x17d2

Bit(s)	R/W	Default	Description
27:16	W/R	512	Di if2 rdmif line buffer depth
11:0	W/R	512	Di if0 rdmif line buffer depth

Table 10-566 DI_PRE_GL_CTRL 0x20ab

Bit(s)	R/W	Default	Description
31	W/R	0	pre count enable
30	W/R	0	pre count reset
29:16	W/R	0x20	total line number for pre count
15	W	0	pre mif manual start
13:0	W/R	0xc	the line number of pre frame reset

Table 10-567 DI_PRE_GL_THD 0x20ac

Bit(s)	R/W	Default	Description
21:16	W/R	10	DI PRE hold line number
15:0	W/R	1920	H total pixel number for pre count

Table 10-568 DI_POST_GL_CTRL 0x20ad

Bit(s)	R/W	Default	Description
31	W/R	0	post count enable
30	W/R	0	post count reset
29:16	W/R	0x20	total line number for post count
15	W	0	post mif manual start
13:0	W/R	0xc	the line number of post frame reset

Table 10-569 DI_POST_GL_THD 0x20ae

Bit(s)	R/W	Default	Description
21:16	W/R	10	DI POST hold line number
15:0	W/R	1920	H total pixel number for post count

Table 10-570 DI_PRE_CTRL 0x1700

Bit(s)	R/W	Default	Description
31	W/R		cbus_pre_frame_rst
30	W/R		cbus_pre_soft_rst
29	W/R		pre_field_num

Amlogic Proprietary and Confidential
Copyright © Amlogic. All rights reserved.

Bit(s)	R/W	Default	Description
27:26	W/R		mode_444c422
25	W/R		di_cont_read_en
24:23	W/R		mode_422c444
21	W/R		pre field num for nr
20	W/R		pre field num for pulldown
19	W/R		pre field num for mcdi
17	W/R		reg_me_autoen
16	W/R		reg_me_en
12:11	W/R	0x2	Reg_tfbf_en : bit0:tfbf enable bit1:normal path enable important!!!
10	W/R		nr_wr_by
9	W/R		di_buf2_en: chan2 line buffer enable , P1 field
8	W/R		Di buf3 en: mem line buffer enable, P2 field
7	W/R		Pd_mtn_swap
6	W/R		mtn after nr
5	W/R		hist_check_en
4	W/R		check_after_nr
3	W/R		check222p_en
2	W/R		check322p_en
1	W/R		mtn_en
0	W/R		nr_en

Table 10-571 DI_POST_CTRL 0x1701

Bit(s)	R/W	Default	Description
31	W/R		cbus_post_frame_rst
30	W/R		cbus_post_soft_rst
29	W/R		post_field_num
14	W/R		Reg_link_nxt_sel: pre-post link 0: current line 1:next line
13:12	W/R		Reg_link_cur_sel: pre-post link 0: current line 1:next line
11	W/R		di_post_repeat
10	W/R		di_post_drop_1st
6	W/R		Reg_post_mb_en
5	W/R		di_vpp_out_en
4	W/R		di_wr_bk_en
3	W/R		di_mux_en

Amlogic Proprietary and Confidential
Copyright © Amlogic. All rights reserved.

Bit(s)	R/W	Default	Description
2	W/R		di_ei_en
1	W/R		Di_blend_en
0	W/R		di_post_en : 1:di post process enable 0:di post disable

Table 10-572 DI_POST_SIZE 0x1702

Bit(s)	R/W	Default	Description
31:29	W/R	0	diwr_field_mode
28:16	W/R	0	vsize1post
12:0	W/R	0	hsize1post

Table 10-573 DI_PRE_SIZE 0x1703

Bit(s)	R/W	Default	Description
31:29	W/R	0	nrwr_field_mode
28:16	W/R	0	vsize1pre
12:0	W/R	0	hsize1pre

Table 10-574 DI_TOP_CTRL 0x17cd

Bit(s)	R/W	Default	Description
21:4	W/R	{5,4,3,2,-1,0}	Afbcd 6mux6_sel: reorder di read mif (afbcd or normal mif)
0	W/R		Vpp path sel : 0: di post output to VPP_VD1 1: di pre output to VPP_VD1

Table 10-575 DI_TOP_CTRL1 0x17d3

Bit(s)	R/W	Default	Description
31:28	W/R		Afbc enc gate clock control
27	W/R		Wrmif shrink switch
26:22	W/R		Soft reset: bit4: wrmif arb reset Bit3 : nr afbc enc reset Bit2 : nr wr mif reset Bit1 : di afbc enc reset Bit0 : di wr mif reset
3	W/R		Wrmif ram switch : 1 di write 4k 0: nr write 4k
2	W/R		Wrmif nr 4k: 1:nr write 4K size
0	W/R		Wrmif_path_switch: 0: no switch 1: nr write and di write switch

Amlogic Proprietary and Confidential
Copyright © Amlogic. All rights reserved.

Table 10-576 DI_AFBCE0_HOLD_CTRL 0x17d4

Bit(s)	R/W	Default	Description
31	W/R	0	Hold enable
23:12	W/R	0	Hold count
11:0	W/R	0	Pass count

Table 10-577 DI_AFBCE1_HOLD_CTRL 0x17d5

Bit(s)	R/W	Default	Description
31	W/R	0	Hold enable
23:12	W/R	0	Hold count
11:0	W/R	0	Pass count

Table 10-578 DI_RDMIF_DEPTH0 0x17d0

Bit(s)	R/W	Default	Description
27:16	W/R	512	Di chan2 rdmif line buffer depth
11:0	W/R	512	Di inp rdmif line buffer depth

Table 10-579 DI_RDMIF_DEPTH1 0x17d1

Bit(s)	R/W	Default	Description
27:16	W/R	512	Di if1 rdmif line buffer depth
11:0	W/R	512	Di mem rdmif line buffer depth

Table 10-580 DI_RDMIF_DEPTH2 0x17d2

Bit(s)	R/W	Default	Description
27:16	W/R	512	Di if2 rdmif line buffer depth
11:0	W/R	512	Di if0 rdmif line buffer depth

Table 10-581 DI_EI_CTRL0 0x1704

Bit(s)	R/W	Default	Description
23:16	W/R		ei0_filter[2:+] abs_diff_left>filter && ...right>filter && ...top>filter && ...bot>filter -> filter
15:8	W/R		ei0_threshold[2:+]
3	W/R		ei0_vertical
2	W/R		ei0_bpscf2
1	W/R		ei0_bpsfar1

Amlogic Proprietary and Confidential
Copyright © Amlogic. All rights reserved.

Table 10-582 DI_EI_CTRL1 0x1705

Bit(s)	R/W	Default	Description
31:24	W/R		ei0_diff
23:16	W/R		ei0_angle45
15:8	W/R		ei0_peak
7:0	W/R		ei0_cross

Table 10-583 DI_EI_CTRL2 0x1706

Bit(s)	R/W	Default	Description
31:24	W/R		ei0_close2
23:16	W/R		ei0_close1
15:8	W/R		ei0_far2
7:0	W/R		ei0_far1

Table 10-584 DI_NR_CTRL0 0x1707

Bit(s)	R/W	Default	Description
26	W/R		nr_cue_en
25	W/R		nr2_en

Table 10-585 DI_NR_CTRL1 0x1708

Bit(s)	R/W	Default	Description
31:30	W/R		mot_p1txtcore_mode
29:24	W/R		mot_p1txtcore_clmt
21:16	W/R		mot_p1txtcore_ylmt
15:8	W/R		mot_p1txtcore_crate
7:0	W/R		mot_p1txtcore_yrate

Table 10-586 DI_NR_CTRL2 0x1709

Bit(s)	R/W	Default	Description
31-30	W/R	0	text_chk_mode (tm2_revb : DI_MTN_CTRL 0x170b, bit21:20)
29-24	W/R	0	mot_curtxtcore_clmt
21-16	W/R	0	mot_curtxtcore_ylmt
15-8	W/R	0	mot_curtxtcore_crate
7-0	W/R	0	mot_curtxtcore_yrate

Amlogic Proprietary and Confidential
Copyright © Amlogic. All rights reserved.

Table 10-587 DI_CANVAS_URGENT0 0x170a

Bit(s)	R/W	Default	Description
26	R/W	0	di write mif bvalid_sel: 1. Bvalid_signal from bus, 0: bytes_wr handshakes
25	R/W	0	di write mif burst last sel: 1. All kind of burst last signal include ext_data_last. 0. Used the normal burst last signal
24:16	W/R	0	Di write mif urgent ctrl
9	R/W	0	nr write mif bvalid_sel: 1. Bvalid_signal from bus, 0: bytes_wr handshakes
8	R/W	0	nr write mif burst last sel: 1. All kind of burst last signal include ext_data_last. 0. Used the normal burst last signal
7:0	W/R	0	Nr write mif urgent ctrl

Table 10-588 DI_MTN_CTRL 0x170b

Bit(s)	R/W	Default	Description
31	W/R	0	reg_mtn_1_en if 0x170b[0]=1 (DI_MTN_CTRL)
30	W/R	0	reg_mtn_init if 0x170b[0]=1 (DI_MTN_CTRL)
29	W/R	0	reg_di2nr_txt_en if 0x170b[0]=1 (DI_MTN_CTRL)
28	W/R	0	reg_di2nr_txt_mode if 0x170b[0]=1 (DI_MTN_CTRL)
27:24	W/R	0	reg_mtn_def if 0x170b[0]=1 (DI_MTN_CTRL)
23: 0	W/R	0	reserved

Table 10-589 DI_MTN_CTRL1 0x170c

Bit(s)	R/W	Default	Description
11:8	W/R		mtn_paramtnthd
7:0	W/R		mtn_paraftthd

Table 10-590 DI_BLEND_CTRL 0x170d

Bit(s)	R/W	Default	Description
31	W/R		blend_1_en
30	W/R		blend_mtn_lpf
28	W/R		post_mb_en
21:20	W/R		blend_top_mode 00: mtn, 01: weave mode, 10: bob mode, 11 : blend mode
19	W/R		blend_reg3_enable
18	W/R		blend_reg2_enable
17	W/R		blend_reg1_enable
16	W/R		blend_reg0_enable
15:14	W/R		blend_reg3_mode
13:12	W/R		blend_reg2_mode

Amlogic Proprietary and Confidential
Copyright © Amlogic. All rights reserved.

Bit(s)	R/W	Default	Description
11:10	W/R		blend_reg1_mode
9:8	W/R		blend_reg0_mode

Table 10-591 DI_ARB_CTRL 0x170f

Bit(s)	R/W	Default	Description
31:26	W/R	0x20	Di_arb_thd1
25:20	W/R	0x20	Di_arb_thd0
19	W/R	0	Di_arb_tid_mode
18	W/R	0	Di_arb_arb_mode
17	W/R	0	Di_arb_acg_en
16	W/R	0	Di_arb_disable_clk
15:0	W/R	0	Di_arb_req_en

Table 10-592 DI_BLEND_REG0_X 0x1710

Bit(s)	R/W	Default	Description
28:16	W/R		blend_reg0_startx
12:0	W/R		blend_reg0_endx

Table 10-593 DI_EI_CTRL4 0x171a

Bit(s)	R/W	Default	Description
29	W/R	0	reg_ei_caldrt_amblike2_biasvertical
28:24	W/R	21	reg_ei_caldrt_addxla2list_drtmax
23	W/R	0	N/A
22:20	W/R	1	reg_ei_caldrt_addxla2list_signm0th
19	W/R	1	reg_ei_caldrt_addxla2list_mode
18:16	W/R	3	reg_ei_signm_sad_cor_rate
15:12	W/R	3	reg_ei_signm_sadi_cor_rate
11:6	W/R	2	reg_ei_signm_sadi_cor_ofst
5:0	W/R	4	reg_ei_signm_sad_ofst

Table 10-594 DI_EI_CTRL5 0x171b

Bit(s)	R/W	Default	Description
30:28	W/R	5	reg_ei_caldrt_cnflcctchk_frcverthrd
27	W/R	0	N/A
26:24	W/R	2	reg_ei_caldrt_cnflctchk_mg

Amlogic Proprietary and Confidential
Copyright © Amlogic. All rights reserved.

Bit(s)	R/W	Default	Description
23:22	W/R	1	reg_ei_caldrt_cnflctchk_ws
21	W/R	1	reg_ei_caldrt_cnflctchk_en
20	W/R	1	reg_ei_caldrt_verfrc_final_en
19	W/R	0	reg_ei_caldrt_verfrc_retimflt_en
18:16	W/R	3	reg_ei_caldrt_verftc_eithratemth
15	W/R	0	reg_ei_caldrt_verfrc_retiming_en
14:12	W/R	2	reg_ei_caldrt_verfrc_bothratemth
11:9	W/R	0	reg_ei_caldrt_ver_thrd
8:4	W/R	4	reg_ei_caldrt_addxla2list_drtmin
3:0	W/R	15	reg_ei_caldrt_addxla2list_drtlimit

Table 10-595 DI_EI_CTRL6 0x171c

Bit(s)	R/W	Default	Description
31:24	W/R	80	reg_ei_caldrt_abext_sad12thhig
23:16	W/R	35	reg_ei_caldrt_abext_sad00thlow
15:8	W/R	28	reg_ei_caldrt_abext_sad12thlow
6:4	W/R	1	reg_ei_caldrt_abext_ratemth
2:0	W/R	5	reg_ei_caldrt_abext_drtthrd

Table 10-596 DI_EI_CTRL7 0x171d

Bit(s)	R/W	Default	Description
29	W/R	1	reg_ei_caldrt_xlanopeak_codien
28:24	W/R	15	reg_ei_caldrt_xlanopeak_drtmax
23	W/R	1	reg_ei_caldrt_xlanopeak_en
22:20	W/R	3	reg_ei_caldrt_abext_monotrnd_alpha
19:18	W/R	1	reg_ei_caldrt_abext_mononum12_thrd
17:16	W/R	1	reg_ei_caldrt_abext_mononum00_thrd
15:12	W/R	6	reg_ei_caldrt_abext_sad00rate
11:8	W/R	6	reg_ei_caldrt_abext_sad12rate
7:0	W/R	80	reg_ei_caldrt_abext_sad00thhig

Table 10-597 DI_EI_CTRL8 0x171e

Bit(s)	R/W	Default	Description
30:28	W/R	2	reg_ei_assign_headtail_magin
26:24	W/R	3	reg_ei_retime_lastcurpncnfltchk_mode

Amlogic Proprietary and Confidential
Copyright © Amlogic. All rights reserved.

Bit(s)	R/W	Default	Description
22:21	W/R	0	reg_ei_retime_lastcurpncnfltchk_drtth
13:11	W/R	3	reg_ei_caldrt_amblike2_drtmg
10:8	W/R	1	reg_ei_caldrt_amblike2_valmg
7:4	W/R	10	reg_ei_caldrt_amblike2_alpha
3:0	W/R	4	reg_ei_caldrt_amblike2_drtth

Table 10-598 DI_EI_CTRL9 0x171f

Bit(s)	R/W	Default	Description
31:28	W/R	7	reg_ei_caldrt_hcnfcheck_frcvert_xla_th3
27	W/R	1	reg_ei_caldrt_hcnfcheck_frcvert_xla_en
26:24	W/R	4	reg_ei_caldrt_conf_drtth
23:20	W/R	11	reg_ei_caldrt_conf_absdrtth
19:18	W/R	2	reg_ei_caldrt_abcheck_mode1
17:16	W/R	1	reg_ei_caldrt_abcheck_mode0
15:12	W/R	11	reg_ei_caldrt_abcheck_drtth1
11:8	W/R	11	reg_ei_caldrt_abcheck_drtth0
6:4	W/R	3	reg_ei_caldrt_abpnchk1_th
1	W/R	1	reg_ei_caldrt_abpnchk1_en
0	W/R	1	reg_ei_caldrt_abpnchk0_en

Table 10-599 DI_EI_CTRL10 0x1793

Bit(s)	R/W	Default	Description
31:28	W/R	0	reg_ei_caldrt_hstrrgchk_drtth
27:24	W/R	8	reg_ei_caldrt_hstrrgchk_frcverthrd
23:20	W/R	4	reg_ei_caldrt_hstrrgchk_mg
19	W/R	0	reg_ei_caldrt_hstrrgchk_1sidnul
18	W/R	0	reg_ei_caldrt_hstrrgchk_excpcnf
17:16	W/R	2	reg_ei_caldrt_hstrrgchk_ws
15	W/R	1	reg_ei_caldrt_hstrrgchk_en
14:13	W/R	2	reg_ei_caldrt_hpncheck_mode
12	W/R	0	reg_ei_caldrt_hpncheck_mute
11:9	W/R	3	reg_ei_caldrt_hcnfcheck_mg2
8:6	W/R	2	reg_ei_caldrt_hcnfcheck_mg1
5:4	W/R	2	reg_ei_caldrt_hcnfcheck_mode
3:0	W/R	9	reg_ei_caldrt_hcnfcheck_frcvert_xla_th5

Amlogic Proprietary and Confidential
Copyright © Amlogic. All rights reserved.

Table 10-600 DI_EI_CTRL11 0x179e

Bit(s)	R/W	Default	Description
30:29	W/R	2	reg_ei_amb_detect_mode
28:24	W/R	8	reg_ei_amb_detect_winth
23:21	W/R	3	reg_ei_amb_decide_rppth
20:19	W/R	1	reg_ei_retime_lastmappncnfltchk_drtth
18:16	W/R	2	reg_ei_retime_lastmappncnfltchk_mode
15:14	W/R	2	reg_ei_retime_lastmapvertfrcchk_mode
13:12	W/R	3	reg_ei_retime_lastvertfrcchk_mode
11:8	W/R	0	reg_ei_retime_lastpnchk_drtth
6	W/R	1	reg_ei_retime_lastpnchk_en
5:4	W/R	3	reg_ei_retime_mode
3	W/R	1	reg_ei_retime_last_en
2	W/R		reg_ei_retime_ab_en
1	W/R	1	reg_ei_caldrt_hstrvertfrcchk_en
0	W/R	0	reg_ei_caldrt_hstrrgchk_mode

Table 10-601 DI_EI_CTRL12 0x179f

Bit(s)	R/W	Default	Description
31:28	W/R	13	reg_ei_drtdelay2_lmt
27:26	W/R	2	reg_ei_drtdelay2_notver_lrwin
25:24	W/R	3	reg_ei_drtdelay_mode
23	W/R	0	reg_ei_drtdelay2_mode
22:20	W/R	0	reg_ei_assign_xla_signm0th
19	W/R	1	reg_ei_assign_pkbiasvert_en
18	W/R	1	reg_ei_assign_xla_en
17:16	W/R	0	reg_ei_assign_xla_mode
15:12	W/R	2	reg_ei_assign_nlfilter_magin
11:8	W/R	5	reg_ei_localsearch_maxrange
7:4	W/R	0	reg_ei_xla_drtth
3:0	W/R	3	reg_ei_flatmsad_thrd

Amlogic Proprietary and Confidential
Copyright © Amlogic. All rights reserved.

Table 10-602 DI_EI_CTRL13 0x17a8

Bit(s)	R/W	Default	Description
27:24	W/R	15	reg_ei_int_drt2x_chrdrt_limit
23:20	W/R	0	reg_ei_int_drt16x_core
19:16	W/R	2	reg_ei_int_drtdelay2_notver_cancv
15:8	W/R	20	reg_ei_int_drtdelay2_notver_sadth
7:0	W/R	20	reg_ei_int_drtdelay2_vlddrt_sadth

Table 10-603 DI_EI_DRT_CTRL 0x2028

Bit(s)	R/W	Default	Description
31	W/R	0	reg_rectg_en: Low angle enable.
30	W/R	0	reg_recbld_en: New and old drt blend enable.
29:28	W/R	2	reg_rectg_ws : window sideto calculate the reference direction: 0:1x1; 1:1x3; 2:1x5; 3:1x7
27			reserved
26:24	W/R	2	reg_abq_margin : top and bottom curve trend quantization margin of noise for direction assignments.
23			reserved
22:20	W/R	3	reg_trend_mg : the Margin of the top/bot trend.
19:16	W/R	1	reg_int_d16xc1 : Coring to drtf.
15:14			reserved
13:8	W/R	40	reg_int_chlmt1: Limit to drtf(16x) for chroma angle
7			reserved
6:4	W/R	5	reg_nscheck_thrd:check whether the pixels id noise or not.
3			reserved
2:0	W/R	7	reg_horsl_ws: window side to check the existent number of low angle drt, if the number<the value, drt=raw drt.

Table 10-604 DI_EI_DRT_PIXTH 0x2029

Bit(s)	R/W	Default	Description
31□24	W/R	22	reg_min_pix: the threshold of min pix of photos, <threshold the pix do not participate in the monotonic trend calculation.
23:16	W/R	203	reg_max_pix:the threshold of max pix of photos, >threshold the pix do not participate in the monotonic trend calculation.
15:8	W/R	50	reg_dmaxmin_thrdma: the max pixel and min pixel difference is larger than the value the trend existent.
7:0	W/R	30	reg_dmaxmin_thrdmi: the max pixel and min pixel difference is smaller than the value the trend non-existent.

Amlogic Proprietary and Confidential
Copyright © Amlogic. All rights reserved.

Table 10-605 DI_EI_DRT_CORRPIXTH 0x202a

Bit(s)	R/W	Default	Description
31□24	W/R	40	reg_newcorrpix_maxthrd: the new low angle drt sad threshold.
23:16	W/R	60	reg_corrpix_diffthrd: the top and bottom pixel difference is larger than the value, the case may be ultra-low angle.
15:8	W/R	10	reg_corrpix_minthrd: the difference of top and bottom pixel is smaller than the value, the drt may be raw drt.
7:0	W/R	20	reg_corrpix_maxthrd: the difference of top and bottom pixel is larger than the value, the drt may be raw drt.

Table 10-606 DI_EI_DRT_RECTG_WAVE 0x202b

Bit(s)	R/W	Default	Description
31:29			reserved
28:24	W/R	0	reg_max_pixwave: the wave of the max pix threshold, prevent min pix close to reg_max_pix caused the number between max and min pix zeros.
23:21			reserved
20:16	W/R	15	reg_pix_wave: the wave of the max and min pix, the max pixel smaller than the value or the min pixel larger than the value, may be the ultra-low angle case.
15:14			reserved
13:8	W/R	40	reg_maxdrt_thrd: the threshold of the low angle max drt.
7:0	W/R	20	reg_wave_thrd:in bilateral cases tow pixel difference is smaller than the value, the trend between the tow pixel not change.

Table 10-607 DI_EI_DRT_PIX_DIFFTH 0x202c

Bit(s)	R/W	Default	Description
31□24	W/R	32	reg_newraw_thrd: the old drt and new drt transition threshold.
23:16	W/R	10	reg_tb_max_thrd: the threshold of top and bottom max or min pixel.
15:8	W/R	20	reg_diffpix_thrd: Max-Min<the value, the trend is non-existent.
7:6			reserved
5:0	W/R	5	reg_bilt_trendnumt: in bilateral cases the difference between the top and bottom pixel number of the monotonic trend smaller than the value is low angle.

Table 10-608 DI_EI_DRT_UNBITREND_TH 0x202d

Bit(s)	R/W	Default	Description
31:29			reserved
28:24	W/R	10	reg_trend_numb:in bilateral cases the pixel number of the monotonic trend larger than the value is low angle.
23:21			reserved
20:16	W/R	4	reg_bilt_trendnum:in bilateral cases the pixel number of the trend larger than the value is low angle.

Amlogic Proprietary and Confidential
Copyright © Amlogic. All rights reserved.

Bit(s)	R/W	Default	Description
15:13			reserved
12:8	W/R	7	reg_unil_trendnumt: in unilateral cases the difference between the top and bottom pixel number of the monotonic trend smaller than the value is low angle.
7:5			reserved
4:0	W/R	10	reg_trend_num: in unilateral cases the pixel number of the trend larger than the value is ultra-low angle.

Table 10-609 DI_EI_XWIN0 0x1798

Bit(s)	R/W	Default	Description
27:16	W/R		ei_xend0
11:0	W/R		ei_xstart0

Table 10-610 DI_MC_REG0_X 0x1720

Bit(s)	R/W	Default	Description
27:16	W/R		mc_reg0_start_x
11:0	W/R		mc_reg0_end_x

Table 10-611 DI_MC_32LVL0 0x172a

Bit(s)	R/W	Default	Description
31:24	W/R		mc_reg2_32lvl
23:16	W/R		mc_reg1_32lvl
15:8	W/R		mc_reg0_32lvl
7:0	W/R		field_32lvl

Table 10-612 DI_MC_32LVL1 0x172b

Bit(s)	R/W	Default	Description
15:8	W/R		mc_reg3_32lvl
7:0	W/R		mc_reg4_32lvl

Table 10-613 DI_MC_22LVL0 0x172c

Bit(s)	R/W	Default	Description
31:16	W/R		mc_reg0_22lvl
15:0	W/R		field_22lvl

Amlogic Proprietary and Confidential
Copyright © Amlogic. All rights reserved.

Table 10-614 DI_MC_22LVL1 0x172d

Bit(s)	R/W	Default	Description
31:16	W/R		mc_reg2_22lvl
15:0	W/R		mc_reg1_22lvl

Table 10-615 DI_MC_22LVL2 0x172e

Bit(s)	R/W	Default	Description
31:16	W/R		mc_reg4_22lvl
15:0	W/R		mc_reg3_22lvl

Table 10-616 DI_MC_CTRL 0x172f

Bit(s)	R/W	Default	Description
4	W/R		mc_reg4_en
3	W/R		mc_reg3_en
2	W/R		mc_reg2_en
1	W/R		mc_reg1_en
0	W/R		mc_reg0_en

Table 10-617 DI_INTR_CTRL 0x1730

Bit(s)	R/W	Default	Description
31	W/R	0	Deint_irq_mode==0: the interrupt flag will be erected when predi_int or postdi_int is generated Deint_irq_mode==1: when the interrupt source of any module in DI is generated without mask operation, the interrupt flag will be erected.
30:26	W/R	0	reserved
25	w/R	0	NrDownscale_int_mask
24	w/R	0	Det3d_int_mask
23	w/R	0	Mcinfowr_int_mask
22	w/R	0	Mcvecwr_int_mask
21	w/R	0	Medi_int_mask
20	w/R	0	Contwr_int_mask
19	w/R	0	Hist_int_mask
18	w/R	0	Diwr_int_mask
17	w/R	0	Mtn_wr_int_mask
16	w/R	0	Nrwr_int_mask
15:10	W/R	0	reserved
9	R		Nrdownscale_done

Amlogic Proprietary and Confidential
Copyright © Amlogic. All rights reserved.

Bit(s)	R/W	Default	Description
8	R		Det3d_done
7	R		Mcinfowr_done (not valid in GX)
6	R		Mcvecwr_done (not valid in GX)
5	R		Medi_done(not valid in GX)
4	R		Contwr_done
3	R		Hist_done
2	R		diwr_done
1	R		Mtnwr_done
0	R		Nrwr_done

DI_INFO_ADDR 0x1731

Table 10-618 Addr_0

Bit(s)	R/W	Default	Description
31:0	R		Field_32p , sum of difference between n-2 and n

Table 10-619 Addr_1

Bit(s)	R/W	Default	Description
31:24	R		Field_32max, maximum difference between n-2 and n
23:0	R		Field_32num, numbers of pixels difference > threshold

Table 10-620 Addr_2

Bit(s)	R/W	Default	Description
31:0	R		Field_22p, sum of difference between temporal and vertical difference

Table 10-621 Addr_3

Bit(s)	R/W	Default	Description
15:0	R		Field_22max , maximum difference between temporal and verticaldifference

Table 10-622 Addr_4

Bit(s)	R/W	Default	Description
23:0	R		Field_22num, pixel sum which difference > threshold

Amlogic Proprietary and Confidential
Copyright © Amlogic. All rights reserved.

Table 10-623 Addr_5

Bit(s)	R/W	Default	Description
31:0	R		Luma sum

Table 10-624 Addr_6

Bit(s)	R/W	Default	Description
31:0	R		Difference of 32, sum in area 0

Table 10-625 Addr_7

Bit(s)	R/W	Default	Description
31:0	R		Difference of 32, sum in area 1

Table 10-626 Addr_8

Bit(s)	R/W	Default	Description
31:0	R		Difference of 32, sum in area 2

Table 10-627 Addr_9

Bit(s)	R/W	Default	Description
31:0	R		Difference of 32, sum in area 3

Table 10-628 Addr_10

Bit(s)	R/W	Default	Description
31:0	R		Difference of 32, sum in area 4

Table 10-629 Addr_11

Bit(s)	R/W	Default	Description
31:0	R		Difference of 22, sum in area 0

Table 10-630 Addr_12

Bit(s)	R/W	Default	Description
31:0	R		Difference of 22, sum in area 1

Table 10-631 Addr_13

Bit(s)	R/W	Default	Description
31:0	R		Difference of 22, sum in area 2

Amlogic Proprietary and Confidential
Copyright © Amlogic. All rights reserved.

Table 10-632 Addr_14

Bit(s)	R/W	Default	Description
31:0	R		Difference of 22, sum in area 3

Table 10-633 Addr_15

Bit(s)	R/W	Default	Description
31:0	R		Difference of 22, sum in area 4

Table 10-634 Addr_16

Bit(s)	R/W	Default	Description
31:0	R		luma, sum in area 0

Table 10-635 Addr_17

Bit(s)	R/W	Default	Description
31:0	R		luma, sum in area 1

Table 10-636 Addr_18

Bit(s)	R/W	Default	Description
31:0	R		luma, sum in area 2

Table 10-637 Addr_19

Bit(s)	R/W	Default	Description
31:0	R		luma, sum in area 3

Table 10-638 Addr_20

Bit(s)	R/W	Default	Description
31:0	R		luma, sum in area 4

Table 10-639 Addr_21

Bit(s)	R/W	Default	Description
31:24	R		Field_32max, maximum difference between n-2 and n in area0
23:0	R		Field_32num, numbers of pixels difference > threshold in area0

Amlogic Proprietary and Confidential
Copyright © Amlogic. All rights reserved.

Table 10-640 Addr_22

Bit(s)	R/W	Default	Description
31:24	R		Field_32max, maximum difference between n-2 and n in area1
23:0	R		Field_32num, numbers of pixels difference > threshold in area1

Table 10-641 Addr_23

Bit(s)	R/W	Default	Description
31:24	R		Field_32max, maximum difference between n-2 and n in area2
23:0	R		Field_32num, numbers of pixels difference > threshold in area2

Table 10-642 Addr_24

Bit(s)	R/W	Default	Description
31:24	R		Field_32max, maximum difference between n-2 and n in area3
23:0	R		Field_32num, numbers of pixels difference > threshold in area3

Table 10-643 Addr_25

Bit(s)	R/W	Default	Description
31:24	R		Field_32max, maximum difference between n-2 and n in area4
23:0	R		Field_32num, numbers of pixels difference > threshold in area4

Table 10-644 Addr_26

Bit(s)	R/W	Default	Description
31:20	R		Field_22max/16, in area 0
19:0	R		Field_22 num/16, in area 0

Table 10-645 Addr_27

Bit(s)	R/W	Default	Description
31:20	R		Field_22max/16, in area 1
19:0	R		Field_22 num/16, in area 1

Table 10-646 Addr_28

Bit(s)	R/W	Default	Description
31:20	R		Field_22max/16, in area 2
19:0	R		Field_22 num/16, in area 2

Amlogic Proprietary and Confidential
Copyright © Amlogic. All rights reserved.

Table 10-647 Addr_29

Bit(s)	R/W	Default	Description
31:20	R		Field_22max/16, in area 3
19:0	R		Field_22 num/16, in area 3

Table 10-648 Addr_30

Bit(s)	R/W	Default	Description
31:20	R		Field_22max/16, in area 4
19:0	R		Field_22 num/16, in area 4

Table 10-649 DI_PRE_HOLD 0x1733

Bit(s)	R/W	Default	Description
31	R/W	0	cntl_pre_hold_enable
27:16	R/W	0	cntl_pre_hold_count
11:0	R/W	0	cntl_pre_pass_count

Table 10-650 DI_MTN_1_CTRL1 0x1740

Bit(s)	R/W	Default	Description
31-30	W/R	0	text_chk_mode (tm2_revb : DI_MTN_CTRL 0x170b, bit21:20)
29-24	W/R	0	mot_curtxtcore_clmt
21-16	W/R	0	mot_curtxtcore_ylmt
15-8	W/R	0	mot_curtxtcore_crate
7-0	W/R	0	mot_curtxtcore_yrate

Table 10-651 DI_MTN_1_CTRL2 0x1741

Bit(s)	R/W	Default	Description
31:24	W/R	26	reg_DI_m1b_core_Ykinter
23:16	W/R	26	reg_DI_m1b_core_Ckinter
15:8	W/R	58	reg_DI_m1b_core_Ykintra
7:0	W/R	98	reg_DI_m1b_core_Ckintra

Table 10-652 DI_MTN_1_CTRL3 0x1742

Bit(s)	R/W	Default	Description
31:24	W/R	21	reg_DI_m1b_thr_2Yrate
23:16	W/R	32	reg_DI_m1b_thr_2Crate

Amlogic Proprietary and Confidential
Copyright © Amlogic. All rights reserved.

Bit(s)	R/W	Default	Description
15: 8	W/R	10	reg_DI_m1b_core_mxcmbY
7: 0	W/R	10	reg_DI_m1b_core_mxcmbC

Table 10-653 DI_MTN_1_CTRL4 0x1743

Bit(s)	R/W	Default	Description
31:24	W/R	1	reg_DI_m1b_coreY
23:16	W/R	0	reg_DI_m1b_coreC
15: 8	W/R	8	reg_DI_m1b_thrd_min
7: 0	W/R	128	reg_DI_m1b_thrd_max

Table 10-654 DI_MTN_1_CTRL5 0x1744

Bit(s)	R/W	Default	Description
31:27	W/R	7	reg_DI_m1b_pp_extnd_num
27:24	W/R	4	reg_DI_m1b_pp_errod_num
21:20	W/R	0	Re_di2nr_txt_mode 0:average of top/bot 1:max; 2: |a+c-2b|;
15: 8	W/R	13	reg_DI_mot_core_Ykinter
7: 0	W/R	13	reg_DI_mot_core_Ckinter

Table 10-655 DI_MTN_1_CTRL6 0x17a9

Bit(s)	R/W	Default	Description
31:24	W/R	13	reg_DI_mot_core_Ykintra
23:16	W/R	90	reg_DI_mot_core_Ckintra
15: 8	W/R	21	reg_DI_mot_cor_2Yrate
7: 0	W/R	32	reg_DI_mot_cor_2Crate

Table 10-656 DI_MTN_1_CTRL7 0x17aa

Bit(s)	R/W	Default	Description
31:24	W/R	10	reg_DI_mot_core_mxcmbY
23:16	W/R	10	reg_DI_mot_core_mxcmbC
15: 8	W/R	2	reg_DI_mot_coreY
7: 0	W/R	1	reg_DI_mot_coreC

Amlogic Proprietary and Confidential
Copyright © Amlogic. All rights reserved.

Table 10-657 DI_MTN_1_CTRL8 0x17ab

Bit(s)	R/W	Default	Description
31:24	W/R	26	reg_DI_fmot_core_Ykinter
23:16	W/R	26	reg_DI_fmot_core_Ckinter
15: 8	W/R	38	reg_DI_fmot_core_Ykintra
7: 0	W/R	98	reg_DI_fmot_core_Ckintra

Table 10-658 DI_MTN_1_CTRL9 0x17ac

Bit(s)	R/W	Default	Description
31:24	W/R	13	reg_DI_fmot_cor_2Yrate
23:16	W/R	32	reg_DI_fmot_cor_2Crate
15: 8	W/R	3	reg_DI_fmot_coreY
7: 0	W/R	2	reg_DI_fmot_coreC

Table 10-659 DI_MTN_1_CTRL10 0x17ad

Bit(s)	R/W	Default	Description
27:24	W/R	2	reg_DI_m1b_suremot_num_fld0
19:16	W/R	2	reg_DI_m1b_surestl_num_fld0
11: 8	W/R	6	reg_DI_m1b_suremot_num_fld1
3: 0	W/R	6	reg_DI_m1b_surestl_num_fld1

Table 10-660 DI_MTN_1_CTRL11 0x17ae

Bit(s)	R/W	Default	Description
27:24	W/R	5	reg_DI_m1b_suremot_evn_th
20:16	W/R	8	reg_DI_m1b_suremot_odd_th
11: 8	W/R	3	reg_DI_m1b_surestl_evn_th
6	W/R	0	reg_DI_m1b_suremot_fast_en
5	W/R	0	reg_DI_m1b_surestl_fast_en
4: 0	W/R	4	reg_DI_m1b_surestl_odd_th

Table 10-661 DI_MTN_1_CTRL12 0x17af

Bit(s)	R/W	Default	Description
31:24	W/R	64	reg_DI_mot_norm_gain
17:16	W/R	2	reg_DI_mot_alpha_lpf
15: 8	W/R	10	reg_DI_m1b_surestl_thrd
4: 0	W/R	4	reg_DI_mot_surestl_gain

Amlogic Proprietary and Confidential
Copyright © Amlogic. All rights reserved.

Table 10-662 DI_CRC_CHK0 0x17c3

Bit(s)	R/W	Default	Description
31	W	0	di pre crc check start (pulse)
30	W	0	Di post crc check start (pulse)
29	W	0	motion crc check start (pulse)
2	R/W	0	MTN output crc check enable
1	R/W	0	DI output crc check enable
0	R/W	0	Nr output crc check enable

Table 10-663 DI_RO_CRC_NRWR 0x17c0

Bit(s)	R/W	Default	Description
31-0	W	0	nrwr crc output (lock by pre frame rst)

Table 10-664 DI_RO_CRC_MTNWR 0x17c2

Bit(s)	R/W	Default	Description
31-0	W	0	mtnwr crc output (lock by pre frame rst)

Table 10-665 DI_RO_CRC_DEINT 0x17c1

Bit(s)	R/W	Default	Description
31-0	W	0	di post crc output (lock by pre frame rst)

10.2.3.8 VIU AFBCD_VDMIF_FGAIN Registers

Table 10-666 Base Address Summary

Module	Sub module	Base address
VD1 read mif	rdmif	0x4800
	afbc_dec	0x4840
	film grain	0x4870
VD2 read mif	rdmif	0x4880
	afbc_dec	0x48c0
	film grain	0x48f0
DI read mif 0	rdmif	0x5400
	afbc_dec	0x5440

Amlogic Proprietary and Confidential
Copyright © Amlogic. All rights reserved.

Module	Sub module	Base address
	film grain	0x5470
DI read mif 1	rdmif	0x5480
	afbc_dec	0x54c0
	film grain	0x54f0
DI read mif 2	rdmif	0x5500
	afbc_dec	0x5540
	film grain	0x5570
DI read mif 3	rdmif	0x5580
	afbc_dec	0x55c0
	film grain	0x55f0
DI read mif 4	rdmif	0x5600
	afbc_dec	0x5640
	film grain	0x5670
DI read mif 5	rdmif	0x5680
	afbc_dec	0x56c0
	film grain	0x56f0

VD1 Path vd_rmem_if0 Registers

Table 10-667 VD1_IF0_GEN_REG 0x4800

Bit(s)	R/W	Default	Description
31	R/W	0	ENABLE_FREE_CLK. 0: Gated clock for power saving 1: Free-running clock to drive logic
30	R/W	0	SW_RESET: Write 1 to this bit to generate a pulse to reset everything except registers.
29	R/W	0	RESET_ON_GO_FIELD: Define whether to reset state machines on go_field pulse. 0: No reset on go_field 1: go_field reset everything except registers
28	R/W	0	URGENT_CHROMA: Set urgent level for chroma fifo request from DDR. 0: Non urgent 1: Urgent
27	R/W	0	URGENT_LUMA: Set urgent level for luma fifo request from DDR. 0: Non urgent 1: Urgent
26	R/W	0	Chroma_end_at_last line: For chroma line, similar to luma_end_at_last_line, as below. Not used if data are stored together in one canvas.
25	R/W	0	Luma_end_at_last_line: Control whether continue outputting luma line past last line. 0: Repeat the last line or dummy pixels, after past the last line 1: Stop outputting data, once past the last line.

Amlogic Proprietary and Confidential
Copyright © Amlogic. All rights reserved.

Bit(s)	R/W	Default	Description
24-19	R/W	4	Hold_lines: After go_field, the number of lines to hold before the module is enabled.
18	R/W	0	LAST_LINE: This bit controls whether we simply repeat the last line or we push dummy pixels. ‘1’ tells the state-machines to repeat the last line using the dummy pixels defined in the register below. ‘0’ indicates that the state-machine should re-read the last line of real data.
17	R	0	Busy status of the state-machines. ‘1’ = busy, ‘0’ = idle
16	R/W	0	DEMUX_MODE: 0 = 4:2:2, 1 = RGB (24-bit). This value is used to control the de-muxing logic when the picture is stored together. When a picture is stored together, the data is read into a single FIFO (the Y FIFO) and must be demultiplexed into the “drain” outputs. In the case of 4:2:2 the data is assumed to be stored in memory in 16-bit chunks: <YCb><YCr><YCb><YCr>,… the Y, Cb and Cr 8-bit values are pulled from the single Y-FIFO and sent out in pairs. This value is only valid when the picture is stored together. If the picture is separated into different canvases, then this bit field is ignored.
15-14	R/W	0	BYTES_PER_PIXEL: This value is used to determine how many bytes are associated with each pixel. 0: This value should be used if the image is stored separately (e.g. RGB or Y, Cb, Cr). 1: This value should be used if the data is 4:2:2 data stored together. In this case each pixel , YCb or YCr, is 16-bits (two bytes). 2: This value should be used if the RGB (24-bit) data is stored together. 3: reserved for future use (alpha RGB).
13-12	R/W	0	DDR_BURST_SIZE_CR: This value is used to control the DDR burst request size for the Cr FIFO. 0: Maximum burst = 24 64-bit values 1: Maximum burst = 32 64-bit values 2: Maximum burst = 48 64-bit values 3: Maximum burst = 64 64-bit values
11-10	R/W	0	DDR_BURST_SIZE_CB: This value is used to control the DDR burst request size for the Cb FIFO. 0: Maximum burst = 24 64-bit values 1: Maximum burst = 32 64-bit values 2: Maximum burst = 48 64-bit values 3: Maximum burst = 64 64-bit values
9-8	R/W	0	DDR_BURST_SIZE_Y: This value is used to control the DDR burst request size for the Y FIFO. 0: Maximum burst = 24 64-bit values 1: Maximum burst = 32 64-bit values 2: Maximum burst = 48 64-bit values 3: Maximum burst = 64 64-bit values
7	R/W	0	MANUAL_START_FRAME: non-latching bit that can be used to simulate the go_field signal for simulation.
6	R/W	0	CHRO_RPT_LASTL_CTRL: This bit controls whether to allow VPP’s chroma-repeat request. 0: Chroma-repeat pulses from VPP are ignored 1: Chroma-repeat pulses from VPP are used.
5	R/W	0	Unused
4	R/W	0	LITTLE_ENDIAN: This bit defines the endianess of the memory data . 0: Pixel data are stored big-endian in memory 1: Pixel data are stored little-endian in memory
3	R/W	0	Chroma_hz_avg: For chroma line output control, similar to luma_hz_avg, as below. Not used if data are stored together in one canvas.
2	R/W	0	Luma_hz_avg: Enable output half amount of data per line to save bandwidth. 0: Output every pixel per line 1: Output half line, each data averaged between every 2 pixels

Amlogic Proprietary and Confidential
Copyright © Amlogic. All rights reserved.

Bit(s)	R/W	Default	Description
			Note: For 4:2:2 mode data stored together in one canvas, only do averaging over luma data.
1	R/W	0	SEPARATE_EN: Set this bit to 1 if the image is in separate canvas locations.
0	R/W	0	ENABLE: This bit is set to 1 to enable the FIFOs and other logic. This bit can be set to 0 to cleanup and put the logic into an IDLE state.

Table 10-668 VD1_IF0_CANVAS0 – Picture 0 0x4801

Bit(s)	R/W	Default	Description
31-24	R/W	0	unused
23-16	R/W	0	CANVAS0_ADDR2: Canvas table address for picture 0 for component 2 (Cr FIFO). This value is ignored when the picture is stored together
15-8	R/W	0	CANVAS0_ADDR1: Canvas table address for picture 0 for component 1 (Cb FIFO). This value is ignored when the picture is stored together
7-0	R/W	0	CANVAS0_ADDR0: Canvas table address for picture 0 for component 0 (Y FIFO).

Table 10-669 VD1_IF0_CANVAS1 – Picture 1 0x4802

Bit(s)	R/W	Default	Description
31-24	R/W	0	unused
23-16	R/W	0	CANVAS1_ADDR2: Canvas table address for picture 1 for component 2 (Cr FIFO). This value is ignored when the picture is stored together
15-8	R/W	0	CANVAS1_ADDR1: Canvas table address for picture 1 for component 1 (Cb FIFO). This value is ignored when the picture is stored together
7-0	R/W	0	CANVAS1_ADDR0: Canvas table address for picture 1 for component 0 (Y FIFO).

Table 10-670 VD1_IF0_LUMA_X0 – Picture 0 0x4803

Bit(s)	R/W	Default	Description
31	R/W	0	Unused
30-16	R/W	0	LUMA_X_END0: Picture 0, luma X end value
15	R/W	0	Unused
14-0	R/W	0	LUMA_X_START0: Picture 0, luma X start value

Table 10-671 VD1_IF0_LUMA_Y0 – Picture 0 0x4804

Bit(s)	R/W	Default	Description
31-29	R/W	0	Unused
28-16	R/W	0	LUMA_Y_END0: Picture 0, luma Y end value
15-13	R/W	0	Unused
12-0	R/W	0	LUMA_Y_START0: Picture 0, luma Y start value

Amlogic Proprietary and Confidential
Copyright © Amlogic. All rights reserved.

Table 10-672 VD1_IF0_CHROMA_X0 – Picture 0 0x4805

Bit(s)	R/W	Default	Description
31	R/W	0	Unused
30-16	R/W	0	CHROMA_X_END0: Picture 0, chroma X end value. This value is only used when the picture is not stored together.
15	R/W	0	Unused
14-0	R/W	0	CHROMA _X_START0: Picture 0, chroma X start value. This value is only used when the picture is not stored together.

Table 10-673 VD1_IF0_ CHROMA_Y0 – Picture 0 0x4806

Bit(s)	R/W	Default	Description
31-29	R/W	0	Unused
28-16	R/W	0	CHROMA _Y_END0: Picture 0, chroma Y end value. This value is only used when the picture is not stored together.
15-13	R/W	0	Unused
12-0	R/W	0	CHROMA _Y_START0: Picture 0, chroma Y start value. This value is only used when the picture is not stored together.

Table 10-674 VD1_IF0_LUMA_X1 – Picture 1 0x4807

Bit(s)	R/W	Default	Description
31	R/W	0	Unused
30-16	R/W	0	LUMA_X_END1: Picture 1, luma X end value
15	R/W	0	Unused
14-0	R/W	0	LUMA_X_START1: Picture 1, luma X start value

Table 10-675 VD1_IF0_LUMA_Y1 – Picture 1 0x4808

Bit(s)	R/W	Default	Description
31-29	R/W	0	Unused
28-16	R/W	0	LUMA_Y_END1: Picture 1, luma Y end value
15-13	R/W	0	Unused
12-0	R/W	0	LUMA_Y_START1: Picture 1, luma Y start value

Table 10-676 VD1_IF0_CHROMA_X1 – Picture 1 0x4809

Bit(s)	R/W	Default	Description
31	R/W	0	Unused
30-16	R/W	0	CHROMA_X_END1: Picture 1, chroma X end value. This value is only used when the picture is not stored together.

Amlogic Proprietary and Confidential
Copyright © Amlogic. All rights reserved.

Bit(s)	R/W	Default	Description
15	R/W	0	Unused
14-0	R/W	0	CHROMA _X_START1: Picture 1, chroma X start value. This value is only used when the picture is not stored together.

Table 10-677 VD1_IF0_ CHROMA_Y1 – Picture 1 0x480A

Bit(s)	R/W	Default	Description
31-29	R/W	0	Unused
28-16	R/W	0	CHROMA _Y_END1: Picture 1, chroma Y end value. This value is only used when the picture is not stored together.
15-13	R/W	0	Unused
12-0	R/W	0	CHROMA _Y_START1: Picture 1, chroma Y start value. This value is only used when the picture is not stored together.

Table 10-678 VD1_IF0_REPEAT_LOOP – Pictures 0 and 1 0x480B

Bit(s)	R/W	Default	Description
31-24	R/W	0	CHROMA_RPT_LOOP1: Repeat loop for Picture 1. Bits[6:4] = start loop pointer, bits [2:0] = end loop pointer. Bits [7] and [3] are ignored.
23-16	R/W	0	LUMA_RPT_LOOP1: Repeat loop for Picture 1. Bits[6:4] = start loop pointer, bits [2:0] = end loop pointer. Bits [7] and [3] are ignored.
15-8	R/W	0	CHROMA_RPT_LOOP0: Repeat loop for Picture 0. Bits[6:4] = start loop pointer, bits [2:0] = end loop pointer. Bits [7] and [3] are ignored.
7-0	R/W	0	LUMA_RPT_LOOP0: Repeat loop for Picture 0. Bits[6:4] = start loop pointer, bits [2:0] = end loop pointer. Bits [7] and [3] are ignored.

Table 10-679 VD1_IF0_LUMA0_RPT_PAT – Picture 0 LUMA repeat pattern 0x480C

Bit(s)	R/W	Default	Description
31-0	R/W	0	Luma repeat/skip pattern for picture 0

Bits	Pattern Index	Pattern description
31-28	7	Repeat/skip pattern: Bit[3] = 0 indicates repeat. Bit[3] = 1 indicates either skip, or output this line and then skip. How to interpret this bit depends on the value of the previous pattern's Bit[3]. If previous Bit[3]=0, then skip; If previous Bit[3]=1, then output this line and then skip. Bits[2:0] indicate the skip / repeat count. Blow is an example of consecutive patterns, the start line is line 0: {0010} Repeat this line (line 0) two more times for a total of three line reads. Proceed to next line (line 1). {0000} Don't repeat this line (line 1). This line will be read just once. Proceed to next line (line 2). {1000} Skip one line (line 2) to get to the next line (line 3). The skip implies that the next line (line 3) should be read at least once. {1011} Read this line (line 3) once, and then skip the next four lines to get to the next line (line 8). The skip implies that the next line (line 8) should be read at least once. {0100} Repeat this line (line 8) four more times for a total of five line read. Proceed to next line (line 9). {1001} Skip two lines to get to the next line (line 11). The skip implies that the next line (line 11) should be read at least once.
27-24	6	See pattern definition above.

Amlogic Proprietary and Confidential
Copyright © Amlogic. All rights reserved.

Bits	Pattern Index	Pattern description
23-20	5	See pattern definition above.
19-16	4	See pattern definition above.
15-12	3	See pattern definition above.
11-8	2	See pattern definition above.
7-4	1	See pattern definition above.
3-0	0	See pattern definition above.

Table 10-680 VD1_IF0_CHROMA0_RPT_PAT – Picture 0 CHROMA repeat pattern 0x480D

Bit(s)	R/W	Default	Description
31-0	R/W	0	Chroma repeat/skip pattern for picture 0. See picture 0 luma pattern for description. This value is only used when the picture is not stored together.

Table 10-681 VD1_IF0_LUMA1_RPT_PAT – Picture 1 LUMA repeat pattern 0x480E

Bit(s)	R/W	Default	Description
31-0	R/W	0	Luma repeat/skip pattern for picture 1. See picture 0 luma pattern for description.

Table 10-682 VD1_IF0_CHROMA1_RPT_PAT – Picture 1 CHROMA repeat pattern 0x480F

Bit(s)	R/W	Default	Description
31-0	R/W	0	Chroma repeat/skip pattern for picture 1. See picture 0 luma pattern for description. This value is only used when the picture is not stored together.

Table 10-683 VD1_IF0_LUMA_PSEL – Picture 0 and 1's LUMA 0x4810

Bit(s)	R/W	Default	Description
31-28	R/W	0	unused
27-26	R/W	0	Luma_psel_mode: controls whether it's single-picture or two-picture mode. {00} Only picture 0 is used. Ignore settings defined in Luma_psel_last_line, Luma_psel_pattern and Luma_psel_loop. {01} Only picture 1 is used. Ignore settings defined in Luma_psel_last_line, Luma_psel_pattern and Luma_psel_loop. {1x} Two-picture mode.
25-24	R/W	0	Luma_psel_last_line: select which picture's last line to output, during repeat last line mode. Bit[0]=0, when picture 0 past the last line, use picture 0's last line during repeat last line mode; Bit[0]=1, when picture 0 past the last line, use picture 1's last line during repeat last line mode; Bit[1]=0, when picture 1 past the last line, use picture 0's last line during repeat last line mode; Bit[1]=1, when picture 1 past the last line, use picture 1's last line during repeat last line mode.
23-8	R/W	0	Luma_psel_pattern. If the value of the bit pointed by the loop pointer is 0, output picture 0's luma line, if the bit value is 1, output picture 1's luma line.

Amlogic Proprietary and Confidential
Copyright © Amlogic. All rights reserved.

Bit(s)	R/W	Default	Description
7-4	R/W	0	Luma_psel_loop start pointer.
3-0	R/W	0	Luma_psel_loop end pointer.

Table 10-684 VD1_IF0_CHROMA_PSEL – Picture 0 and 1's CHROMA 0x4811

Bit(s)	R/W	Default	Description
31-28	R/W	0	unused
27-26	R/W	0	Chroma_psel_mode: see luma_psel_mode. This value is only used when the picture is not stored together.
25-24	R/W	0	Chroma_psel_last_line: See luma_psel_last_line. This value is only used when the picture is not stored together.
23-8	R/W	0	Chroma_psel_pattern. If the value of the bit pointed by the loop pointer is 0, output picture 0's chroma line, if the bit value is 1, output picture 1's chroma line. This value is only used when the picture is not stored together.
7-4	R/W	0	Chroma_psel_loop start pointer. This value is only used when the picture is not stored together.
3-0	R/W	0	Chroma_psel_loop end pointer. This value is only used when the picture is not stored together.

Table 10-685 VD1_IF0_DUMMY_PIXEL 0x4812

Bit(s)	R/W	Default	Description
31-24	R/W	0x00	Y or R dummy pixel value ,8bit
23-16	R/W	0x80	Cb or G dummy pixel value ,8bit
15-8	R/W	0x80	Cr or B dummy pixel value ,8bit
7-0	R/W	0	unused

VD1_RANGE_MAP_Y 0x481A

VD1_RANGE_MAP_CB 0x481B

Table 10-686 VD1_RANGE_MAP_CR 0x481C

Output data range conversion function:

Y [n] = clip (Round (((Y [n] +DIN_OFFSET) * RANGE_MAP_COEF) / (1<<RANGE_MAP_SR)) +DOUT_OFFSET);

To perform VC-1 range reduction, set the following:

DIN_OFFSET = 0x180 = -128;

RANGE_MAP_COEF = RANGE_MAPY + 9

RANGE_MAP_SR = 3

DOUT_OFFSET = 0x080 = 128

To get the equivalent function:

Y[n] = clip((((Y[n]-128) * (RANGE_MAPY + 9) + 4) >> 3) +128);

Amlogic Proprietary and Confidential
Copyright © Amlogic. All rights reserved.

Bit(s)	R/W	Default	Description
31-23	R/W	0	DIN_OFFSET
22-15	R/W	0	RANGE_MAP_COEF
14	R/W	0	unused
13-10	R/W	0	RANGE_MAP_SR
9-1	R/W	0	DOUT_OFFSET
0	R/W	0	RANGE_MAP_EN

Table 10-687 VD1_IF0_GEN_REG2 0x481D

Bit(s)	R/W	Default	Description
31-2	R/W	0	unused
1-0	R/W	0	COLOR_MAP: Define color map for NV12 or NV21 mode. Only applicable when VD1_IF0_GEN_REG.SEPARATE_EN = 1. 0: NOT NV12 or NV21; 1: NV12 (CbCr); 2: NV21 (CrCb).

Table 10-688 VD1_IF0_GEN_REG3 0x4816

Bit(s)	R/W	Default	Description
11-10	R/W	0	cntl_dbg_mode
9-8	R/W	0	cntl_bits_mode : 0->8bit 1->10bit 422 2->10bit 444
6-4	R/W	3	cntl_blk_len
2-1	R/W	1	cntl_burst_len
0	R/W	1	cntl_64bit_rev

Table 10-689 VIU_VD1_FMT_CTRL 0x4818

Bit(s)	R/W	Default	Description
31	R/W	0	gate_clk_en. 0=No clock gating, free-running; 1=Enable clock gating for power saving.
30	R/W	0	soft_rst. If true, reset formatters.
29	R/W	0	unused
28	R/W	0	if true, horizontal formatter use repeating to generate pixel, otherwise use bilinear interpolation
27-24	R/W	0	horizontal formatter initial phase
23	R/W	0	horizontal formatter repeat pixel 0 enable
22-21	R/W	0	horizontal Y/C ratio, 00: 1:1, 01: 2:1, 10: 4:1
20	R/W	0	horizontal formatter enable
19	R/W	0	if true, always use phase0 while vertical formater, meaning always repeat data, no interpolation
18	R/W	0	if true, disable vertical formatter chroma repeat last line

Amlogic Proprietary and Confidential
Copyright © Amlogic. All rights reserved.

Bit(s)	R/W	Default	Description
17	R/W	0	vertical formatter doesn’t need repeat line on phase0, 1: enable, 0: disable
16	R/W	0	vertical formatter repeat line 0 enable
15-12	R/W	0	vertical formatter skip line num at the beginning
11-8	R/W	0	vertical formatter initial phase
7-1	R/W	0	vertical formatter phase step (3.4)
0	R/W	0	vertical formatter enable

Table 10-690 VIU_VD1_FMT_W 0x4819

Bit(s)	R/W	Default	Description
27-16	R/W	0	horizontal formatter width
11-0	R/W	0	vertical formatter width

VD2 vd_rmem_if0 is same as vd1 vd_rmem_if0, BASE_addr is from 0x4800 to 0x4880

DI vd_rmem_if0 is same as vd1 vd_rmem_if0, BASE_addr is from 0x4800 to 0x5400-0x5680

VPU AFBC Registers

Table 10-691 AFBCDM_ENABLE 0x4840

Bit(s)	R/W	Default	Description
28:23	R/W	0	reg_gclk_ctrl_core : unsigned, default = 0 if true ,disable clock, otherwise enable clock
22	R/W	0	reg_fmt_size_sw_mode : unsigned, default = 0, 0:hw mode 1:sw mode for format size
21	R/W	1	reg_addr_link_en : unsigned, default = 1, 1:enable
20	R/W	0	reg_fmt444_comb : unsigned, default = 0, 0: 444 8bit uncomb
19	R/W	0	reg_dos_uncomp_mode : unsigned , default = 0
18:16	R/W	4	soft_rst : unsigned , default = 4
13:12	R/W	1	ddr_blk_size : unsigned , default = 1
11:9	R/W	3	cmd_blk_size : unsigend , default = 3
8	R/W	0	dec_enable : unsigned , default = 0
1	R/W	1	head_len_sel : unsigned , default = 1
0	R/W	0	dec_frm_start : unsigned , default = 0

Table 10-692 AFBCDM_MODE 0x4841

Bit(s)	R/W	Default	Description
29	R/W	0	ddr_sz_mode : uns, default = 0 , 0: fixed block ddr size 1 : unfixed block ddr size;
28	R/W	0	blk_mem_mode : uns, default = 0 , 0: fixed 16x128 size; 1 : fixed 12x128 size
27:26	R/W	0	rev_mode : uns, default = 0 , reverse mode

Amlogic Proprietary and Confidential
Copyright © Amlogic. All rights reserved.

Bit(s)	R/W	Default	Description
25:24	R/W	3	mif_urgent : uns, default = 3 , info mif and data mif urgent
22:16	R/W	0	hold_line_num : uns, default = 0 ,
15:14	R/W	2	burst_len : uns, default = 2, 0: burst1 1:burst2 2:burst4
13:8	R/W	0	compbits_yuv : uns, default = 0 , bit 1:0,: y component bitwidth : 00-8bit 01-9bit 10-10bit 11-12bit bit 3:2,: u component bitwidth : 00-8bit 01-9bit 10-10bit 11-12bit bit 5:4,: v component bitwidth : 00-8bit 01-9bit 10-10bit 11-12bit
7:6	R/W	0	vert_skip_y : uns, default = 0 , luma vert skip mode : 00-y0y1, 01-y0, 10-y1, 11-(y0+y1)/2
5:4	R/W	0	horz_skip_y : uns, default = 0 , luma horz skip mode : 00-y0y1, 01-y0, 10-y1, 11-(y0+y1)/2
3:2	R/W	0	vert_skip_uv : uns, default = 0 , chroma vert skip mode : 00-y0y1, 01-y0, 10-y1, 11-(y0+y1)/2
1:0	R/W	0	horz_skip_uv : uns, default = 0 , chroma horz skip mode : 00-y0y1, 01-y0, 10-y1, 11-(y0+y1)/2

Table 10-693 AFBCDM_SIZE_IN 0x4842

Bit(s)	R/W	Default	Description
28:16	R/W	1920	hsize_in : uns, default = 1920 , pic horz size in unit: pixel
12:0	R/W	1080	vsize_in : uns, default = 1080 , pic vert size in unit: pixel

Table 10-694 AFBCDM_DEC_DEF_COLOR 0x4843

Bit(s)	R/W	Default	Description
29:20	R/W	256	def_color_y : uns, default = 256, afbc dec y default setting value
19:10	R/W	128	def_color_u : uns, default = 128, afbc dec u default setting value
9: 0	R/W	128	def_color_v : uns, default = 128, afbc dec v default setting value

Table 10-695 AFBCDM_CONV_CTRL 0x4844

Bit(s)	R/W	Default	Description
13:12	R/W	2	fmt_mode : uns, default = 2, 0:yuv444 1:yuv422 2:yuv420
11: 0	R/W	256	conv_lbuf_len : uns, default = 256, unit=16 pixel need to set = 2^n

Table 10-696 AFBCDM_LBUF_DEPTH 0x4845

Bit(s)	R/W	Default	Description
27:16	R/W	128	dec_lbuf_depth : uns, default = 128; // unit= 8 pixel
11:0	R/W	128	mif_lbuf_depth : uns, default = 128;

Amlogic Proprietary and Confidential
Copyright © Amlogic. All rights reserved.

Table 10-697 AFBCDM_HEAD_BADDR 0x4846

Bit(s)	R/W	Default	Description
31:0	R/W	0x0	mif_info_baddr : uns, default = 32'h0;

Table 10-698 AFBCDM_BODY_BADDR 0x4847

Bit(s)	R/W	Default	Description
31:0	R/W	0x0001_0000	mif_data_baddr : uns, default = 32'h0001_0000;

Table 10-699 AFBCDM_SIZE_OUT 0x4848

Bit(s)	R/W	Default	Description
28:16	R/W	1920	hszie_out: uns, default = 1920 ; // unit: 1 pixel
12:0	R/W	1080	Vsize_out : uns, default = 1080 ; // unit: 1 pixel

Table 10-700 AFBCDM_OUT_YSCOPE 0x4849

Bit(s)	R/W	Default	Description
28:16	R/W	0	out_vert_bgn : uns, default = 0 ; // unit: 1 pixel
12:0	R/W	1079	out_vert_end : uns, default = 1079 ; // unit: 1 pixel

Table 10-701 AFBCDM_STAT 0x484a

Bit(s)	R/W	Default	Description
31:1	RO	0	ro_dbg_top_info : uns, default = 0
0	R/W	0	frm_end_stat : uns, default = 0 frame end status

Table 10-702 AFBCDM_VD_CFMT_CTRL 0x484b

Bit(s)	R/W	Default	Description
31	R/W	0	cfmt_gclk_bit_dis : uns, default = 0 ; // it true, disable clock, otherwise enable clock
30	R/W	0	cfmt_soft_rst_bit : uns, default = 0 ; // soft rst bit
28	R/W	0	chfmt_rpt_pix : uns, default = 0 ; // if true, horizontal formatter use repeating to generate pixel, otherwise use bilinear interpolation
27:24	R/W	0	chfmt_ini_phase : uns, default = 0 ; // horizontal formatter initial phase
23	R/W	0	chfmt_rpt_p0_en : uns, default = 0 ; // horizontal formatter repeat pixel 0 enable
22:21	R/W	0	chfmt_yc_ratio : uns, default = 0 ; // horizontal Y/C ratio, 00: 1:1, 01: 2:1, 10: 4:1
20	R/W	0	chfmt_en : uns, default = 0 ; // horizontal formatter enable
19	R/W	0	cvfmt_phase0_always_en : uns, default = 0 ; //if true, always use phase0 while vertical formater, meaning always repeat data, no interpolation

Amlogic Proprietary and Confidential
Copyright © Amlogic. All rights reserved.

Bit(s)	R/W	Default	Description
18	R/W	0	cvfmt_rpt_last_dis : uns, default = 0 ; //if true, disable vertical formatter chroma repeat last line
17	R/W	0	cvfmt_phase0_nrpt_en : uns, default = 0 ; //vertical formatter dont need repeat line on phase0, 1: enable, 0: disable
16	R/W	0	cvfmt_rpt_line0_en : uns, default = 0 ; //vertical formatter repeat line 0 enable
15:12	R/W	0	cvfmt_skip_line_num : uns, default = 0 ; //vertical formatter skip line num at the beginning
11:8	R/W	0	cvfmt_ini_phase : uns, default = 0 ; //vertical formatter initial phase
7:1	R/W	0	cvfmt_phase_step : uns, default = 0 ; //vertical formatter phase step (3.4)
0	R/W	0	cvfmt_en : uns, default = 0 ; //vertical formatter enable

Table 10-703 AFBCDM_VD_CFMT_W 0x484c

Bit(s)	R/W	Default	Description
28:16	R/W	0x0	cfmt_w : uns, default = 0 ;//horizontal : formatter width
12:0	R/W	0x0	cvfmt_w : uns ,default = 0;//vertical : formatter width

Table 10-704 AFBCDM_MIF_HOR_SCOPE 0x484d

Bit(s)	R/W	Default	Description
25:16	R/W	0	mif_blk_bgn_h : uns, default = 0 ; // unit: 32 pixel/block hor
9: 0	R/W	59	mif_blk_end_h : uns, default = 59 ; // unit: 32 pixel/block hor

Table 10-705 AFBCDM_MIF_VER_SCOPE 0x484e

Bit(s)	R/W	Default	Description
27:16	R/W	0	mif_blk_bgn_v : uns, default = 0 ; // unit: 32 pixel/block ver
11: 0	R/W	269	mif_blk_end_v : uns, default = 269; // unit: 32 pixel/block ver

Table 10-706 AFBCDM_PIXEL_HOR_SCOPE 0x484f

Bit(s)	R/W	Default	Description
28:16	R/W	0	dec_pixel_bgn_h : uns, default = 0 ; // unit: pixel
12: 0	R/W	1919	dec_pixel_end_h : uns, default = 1919 ; // unit: pixel

Table 10-707 AFBCDM_PIXEL_VER_SCOPE 0x4850

Bit(s)	R/W	Default	Description
28:16	R/W	0	dec_pixel_bgn_v : uns, default = 0 ; // unit: pixel
12: 0	R/W	1079	dec_pixel_end_v : uns, default = 1079 ; // unit: pixel

Amlogic Proprietary and Confidential
Copyright © Amlogic. All rights reserved.

Table 10-708 AFBCDM_VD_CFMT_H 0x4851

Bit(s)	R/W	Default	Description
12:0	R/W	142	cfmt : uns, default =142;// vertical : formatter height

Table 10-709 AFBCDM_IQUANT_ENABLE 0x4852

Bit(s)	R/W	Default	Description
11	R/W	0x0	reg_quant_expand_en_1 : //unsigned, RW, enable for quantization value expansion
10	R/W	0x0	reg_quant_expand_en_0 : //unsigned, RW, enable for quantization value expansion
9: 8	R/W	-1	reg_bcleav_ofst : //signed , RW, default = 0 bcleave ofset to get lower range, especially under lossy, for v1/v2, x=0 is equivalent, default = -1;
4	R/W	0	reg_quant_enable_1 : // unsigned , RW, default = 0 enable for quant to get some lossy
0	R/W	0	reg_quant_enable_0 : // unsigned , RW, default = 0 enable for quant to get some lossy

Table 10-710 AFBCDM_IQUANT_LUT_1 0x4853

Bit(s)	R/W	Default	Description
30:28	R/W	0	reg_iquant_yclut_0_11 : // unsigned , RW, default = 0 quantization lut for mintree leavs, iquant=2^lut(bc_leav_q+1)
26:24	R/W	1	reg_iquant_yclut_0_10 : // unsigned , RW, default = 1 quantization lut for mintree leavs, iquant=2^lut(bc_leav_q+1)
22:20	R/W	2	reg_iquant_yclut_0_9 : // unsigned , RW, default = 2 quantization lut for mintree leavs, iquant=2^lut(bc_leav_q+1)
18:16	R/W	3	reg_iquant_yclut_0_8 : // unsigned , RW, default = 3 quantization lut for mintree leavs, iquant=2^lut(bc_leav_q+1)
14:12	R/W	4	reg_iquant_yclut_0_7 : // unsigned , RW, default = 4 quantization lut for mintree leavs, iquant=2^lut(bc_leav_q+1)
10: 8	R/W	5	reg_iquant_yclut_0_6 : // unsigned , RW, default = 5 quantization lut for mintree leavs, iquant=2^lut(bc_leav_q+1)
6: 4	R/W	5	reg_iquant_yclut_0_5 : // unsigned , RW, default = 5 quantization lut for mintree leavs, iquant=2^lut(bc_leav_q+1)
2: 0	R/W	4	reg_iquant_yclut_0_4 : // unsigned , RW, default = 4 quantization lut for mintree leavs, iquant=2^lut(bc_leav_q+1)

Table 10-711 AFBCDM_IQUANT_LUT_2 0x4854

Bit(s)	R/W	Default	Description
14:12	R/W	3	reg_iquant_yclut_0_3 : // unsigned , RW, default = 3 quantization lut for mintree leavs, iquant=2^lut(bc_leav_q+1)
10: 8	R/W	2	reg_iquant_yclut_0_2 : // unsigned , RW, default = 2 quantization lut for mintree leavs, iquant=2^lut(bc_leav_q+1)

Amlogic Proprietary and Confidential
Copyright © Amlogic. All rights reserved.

Bit(s)	R/W	Default	Description
6: 4	R/W	1	reg_iquant_yclut_0_1 : // unsigned , RW, default = 1 quantization lut for mintree leavs, iquant=2^lut(bc_leav_q+1)
2: 0	R/W	0	reg_iquant_yclut_0_0 : // unsigned , RW, default = 0 quantization lut for mintree leavs, iquant=2^lut(bc_leav_q+1)

Table 10-712 AFBCDM_IQUANT_LUT_3 0x4855

Bit(s)	R/W	Default	Description
30:28	R/W	0	reg_iquant_yclut_1_11 : // unsigned , RW, default = 0 quantization lut for mintree leavs, iquant=2^lut(bc_leav_q+1)
26:24	R/W	1	reg_iquant_yclut_1_10 : // unsigned , RW, default = 1 quantization lut for mintree leavs, iquant=2^lut(bc_leav_q+1)
22:20	R/W	2	reg_iquant_yclut_1_9 : // unsigned , RW, default = 2 quantization lut for mintree leavs, iquant=2^lut(bc_leav_q+1)
18:16	R/W	3	reg_iquant_yclut_1_8 : // unsigned , RW, default = 3 quantization lut for mintree leavs, iquant=2^lut(bc_leav_q+1)
14:12	R/W	4	reg_iquant_yclut_1_7 : // unsigned , RW, default = 4 quantization lut for mintree leavs, iquant=2^lut(bc_leav_q+1)
10: 8	R/W	5	reg_iquant_yclut_1_6 : // unsigned , RW, default = 5 quantization lut for mintree leavs, iquant=2^lut(bc_leav_q+1)
6: 4	R/W	5	reg_iquant_yclut_1_5 : // unsigned , RW, default = 5 quantization lut for mintree leavs, iquant=2^lut(bc_leav_q+1)
2: 0	R/W	4	reg_iquant_yclut_1_4 : // unsigned , RW, default = 4 quantization lut for mintree leavs, iquant=2^lut(bc_leav_q+1)

Table 10-713 AFBCDM_IQUANT_LUT_4 0x4856

Bit(s)	R/W	Default	Description
14:12	R/W	3	reg_iquant_yclut_1_3 : // unsigned , RW, default = 3 quantization lut for mintree leavs, iquant=2^lut(bc_leav_q+1)
10: 8	R/W	2	reg_iquant_yclut_1_2 : // unsigned , RW, default = 2 quantization lut for mintree leavs, iquant=2^lut(bc_leav_q+1)
6: 4	R/W	1	reg_iquant_yclut_1_1 : // unsigned , RW, default = 1 quantization lut for mintree leavs, iquant=2^lut(bc_leav_q+1)
2: 0	R/W	0	reg_iquant_yclut_1_0 : // unsigned , RW, default = 0 quantization lut for mintree leavs, iquant=2^lut(bc_leav_q+1)

Table 10-714 AFBCDM_ROT_CTRL 0x4860

Bit(s)	R/W	Default	Description
31:30	R/W	0	reg_rot_ohds2_mode : uns, default = 0 , rot output format down horizontal drop mode, 0:average , 1:use 0, 2: use 1
29:28	R/W	0	reg_rot_ovds2_mode : uns, default = 0 , rot output format down vertical drop mode, 0:average , 1:use 0, 2: use 1
27	R/W	0	reg_pip_mode : uns, default = 0 , 0:dec_source from vdin/dos 1: dec_source from pip

Amlogic Proprietary and Confidential
Copyright © Amlogic. All rights reserved.

Bit(s)	R/W	Default	Description
26:24	R/W	0	reg_rot_uv_vshrk_drop_mode: uns, default = 0, 0: average (1/2: 1:left 2:right) (1/4:1:[0] 2:p[1] 3:[2] 4:[3] , 5:left_121 6:right_121
22:20	R/W	0	reg_rot_uv_hshrk_drop_mode: uns, default = 0, 0: average (1/2: 1:left 2:right) (1/4:1:[0] 2:p[1] 3:[2] 4:[3] , 5:left_121 6:right_121
19:18	R/W	0	reg_rot_uv_vshrk_ratio: uns, default = 0, 0:no shrink 1:1/2 shrink 2:1/4 shrink
17:16	R/W	0	reg_rot_uv_hshrk_ratio: uns, default = 0, 0:no shrink 1:1/2 shrink 2:1/4 shrink
14:12	R/W	0	reg_rot_y_vshrk_drop_mode : uns,default = 0, 0: average (1/2: 1:left 2:right) (1/4:1:[0] 2:p[1] 3:[2] 4:[3] , 5:left_121 6:right_121
10:8	R/W	0	reg_rot_y_hshrk_drop_mode : uns,default = 0, 0: average (1/2: 1:left 2:right) (1/4:1:[0] 2:p[1] 3:[2] 4:[3] , 5:left_121 6:right_121
7:6	R/W	0	reg_rot_y_vshrk_ratio:uns, default =0, 0:disable 1: 1/2 v-shrink 2:1/4 v-shrink
5:4	R/W	0	reg_rot_y_hshrk_ratio:uns, default =0, 0:disable 1: 1/2 h-shrink 2:1/4 h-shrink
3:2	R/W	0	reg_rot_uv422_drop_mode :uns, default = 0, 0:average two pixel 1:keep left 2: keep right
1	R/W	0	reg_rot_uv422_omode : uns,default = 0, When rot input is fmt 422, 0:output_uv422 1:output uv420
0	R/W	0	reg_rot_enable : uns, default = 0, rotation enable

Table 10-715 AFBCDM_ROT_SCOPE 0x4861

Bit(s)	R/W	Default	Description
25:20	R/W	0	reg_rot_debug_probe : uns, default= 0; bits [2:0] for y, bits [5:3] for uv 0: iblk_size, 1:oblk_size, 2:iblk_cnt, 3:oblk_cnt, 4:hsize_in, 5:vsize_in, 6:vstep
19	R/W	0	reg_rot_dout_ds_mode_sw: uns, default= 0, 0: use hardware mode, 1: use software mode
18:17	R/W	0	reg_dout_ds_mode:uns, default = 0 ,rot output format downscale mode : 0 : h_downscale, 1: v_downscale
16	R/W	1	reg_ifmt_force444: uns, default = 1 : rot input fmt force as 444
15:14	R/W	0	reg_rot_ofmt_mode: uns, default = 0, rot output format mode
13:12	R/W	0	reg_rot_combits_out_y: uns, default = 0 ,rot output combit y
11:10	R/W	0	reg_rot_combits_out_uv: uns, default = 0 ,rot output combit uv
9:8	R/W	0	reg_rot_wrbgn_v: uns, default = 0, rot pic vertical size window begin pixel
4:0	R/W	0	reg_rot_wrbgn_h: uns ,default = 0, rot pic horizontal size window begin pixel

Table 10-716 AFBCDM_RPLC_CTRL 0x4862

Bit(s)	R/W	Default	Description
31	R/W	0	reg_rplc_inter_corr_en: uns, default = 0 //pip replace inter_frame edge correct enable
30	R/W	0	reg_rplc_dummy_corr_en: uns, default = 0 //pip replace outside of real-pipframe correct enable
29	R/W	1	reg_rplc_byps: uns, default = 1, //pip replace module bypass

Amlogic Proprietary and Confidential
Copyright © Amlogic. All rights reserved.

Bit(s)	R/W	Default	Description
28:16	R/W	1080	reg_rplc_vsize_in: uns, default = 1080
12:0	R/W	1920	reg_rplc_hsize_in: uns, default = 1920

Table 10-717 AFBCDM_RPLC_PICEN 0x4863

Bit(s)	R/W	Default	Description
27:16	R/W	0	reg_rplc_def_color_y: uns, default = 0 //pip replace def_color_y
15:0	R/W	0xffff	Reg_rplc_pic_enable: uns, default =16'hffff, //pip_replace pip_picure enable

Table 10-718 AFBCDM_RPLC_DEFCOL 0x4864

Bit(s)	R/W	Default	Description
23:12	R/W	0	reg_rplc_def_color_v: uns, default =0, //pip replace def_color_v
11:0	R/W	0	reg_rplc_def_color_u: uns, default =0, //pip replace def_color_u

Table 10-719 AFBCDM_RPLC_SCPXN_ADDR 0x4865

Bit(s)	R/W	Default	Description
31:0	R/W	0	reg_rplc_scpxn_addr: uns, default =0, //pip replace scopes of 16 windows addr

Table 10-720 AFBCDM_RPLC_SCPXN_DATA 0x4866

Bit(s)	R/W	Default	Description
31:0	R/W	0	reg_rplc_scpxn_data: uns, default = 0, //pip_replace scopes of 16 windows data

Table 10-721 AFBCDM_ROT_RO_STAT 0x4867

Bit(s)	R/W	Default	Description
31:0	R/O	0	ro_rot_debug: uns, RO ,default = 0, rot some status

VD2_AFBC dec is same as vd1 AFBC dec , BASE_addr is from 0x4840 to 0x48c0

DI AFBC dec is same as vd1 AFBC dec , BASE_addr is from 0x4840 to 0x5440-0x56c0

VPU FILM GRAIN Registers

Table 10-722 FGRAIN_CTRL 0x4870

Bit(s)	R/W	Default	Description
25:24	R/W	0	reg_sync_ctrl: [0] 1 to shaddow reg_fgrain_glb_en; [1] to shaddow reg_fgrain_loc_en.
22	R/W	0	reg_dma_st_clr: write 1 to clear DMA error status, then write to 0
21	R/W	0	reg_hold4dma_scale:1 to wait DMA scale data ready before accept input data
20	R/W	0	reg_hold4dma_tbl: 1 to wait DMA grain table data ready before accept input data

Amlogic Proprietary and Confidential
Copyright © Amlogic. All rights reserved.

Bit(s)	R/W	Default	Description
19	R/W	0	reg_cin_uv_swap: 1 to swap U/V input
18	R/W	0	reg_cin_rev:1 to reverse the U/V input order
17	R/W	0	reg_yin_rev:1 to reverse the Y input order
16	R/W	1	reg_fgrain_ext_imode: 0 to indicate the input data is (<<2) in 8bit mode
15	R/W	0	reg_use_par_apply_fgrain:1 to use parameter “apply_fgrain” from DMA table
14	R/W	0	reg_fgrain_last_ln_mode□ 1 to keep film grain noise generator though the input is finished for none-afbc mode
13	R/W	0	reg_fgrain_use_sat4bp: 1 to use SW max/min for output saturation and not (1<<bitdepth)-1/0 when film grain bypass.
12	R/W	1	reg_apply_c_mode:following C code
11	R/W	1	reg_fgrain_tbl_sign_mode:0 to indicate signed bit is not extended in 8bit mode
10	R/W	1	reg_fgrain_tbl_ext_mode: 0 to indicate the grain table value is (<<2) in 8bit mode
9: 8	R/W	2	reg_fmt_mode: 0:444; 1:422; 2:420; 3:reserved. Only 420 have affect, others mode will bypass film grain
7: 6	R/W	1	reg_comp_bits: 0:8bits; 1:10bits, others reserved.
5	R/W	0	reg_rev_mode□1 for vertical scan reverse
4	R/W	0	reg_rev_mode□1 for horizontal scan reverse
2	R/W	1	reg_block_mode: 0: none-afbc mode; 1 afbc mode
1	R/W	0	reg_fgrain_loc_en:frame-based fgrain enable
0	R/W	0	reg_fgrain_glb_en: global-based fgrain enable

Table 10-723 FGRAIN_WIN_H 0x4871

Bit(s)	R/W	Default	Description
31:16	R/W	3812	reg_win_end_h: horizontal end position of window to do film grain: LSB 5bit should be 0 for afbc mode. For example, if horizontal size is 3840 with no window cut, it will set to (3840-32)
15: 0	R/W	0	reg_win_bgn_h: horizontal start position of window to do film grain: LSB 5bit should be 0 for afbc mode

Table 10-724 FGRAIN_WIN_V 0x4872

Bit(s)	R/W	Default	Description
31:16	R/W	2156	reg_win_end_v: vertical end position of window to do film grain: LSB 2bit should be 0 for afbc mode. For example, if vertical size is 2160 with no window cut, it will set to (2160-4)
15: 0	R/W	0	reg_win_bgn_v: vertical start position of window to do film grain: LSB 2bit should be 0 for afbc mode

Amlogic Proprietary and Confidential
Copyright © Amlogic. All rights reserved.

Table 10-725 FGRAIN_SW_Y_RANGE 0x4873

Bit(s)	R/W	Default	Description
31	R/W	0	reg_fgrain_sw_yrange, 1 to use fgrain_ymin/ymax for saturation. Otherwise use 16/235 when parameter: clip _to_restricted_range =1, 0/255 when clip _to_restricted_range=0.
25:16	R/W	1023	reg_fgrain_ymax: max value for SW saturation
9: 0	R/W	0	reg_fgrain_ymin: min value for SW saturation

Table 10-726 FGRAIN_SW_C_RANGE 0x4874

Bit(s)	R/W	Default	Description
31	R/W	0	reg_fgrain_sw_crange, 1 to use fgrain_cmin/cmax for saturation. Otherwise use 16/240 when parameter: clip _to_restricted_range =1, 0/255 when clip _to_restricted_range=0.
25:16	R/W	1023	reg_fgrain_cmax: max value for SW saturation
9: 0	R/W	0	reg_fgrain_cmin: min value for SW saturation

Table 10-727 FGRAIN_GCLK_CTRL_0 0x4875

Bit(s)	R/W	Default	Description
31 :0	R/W	0	reg_fgrain_gclk_ctrl0: Gate clock control.

Table 10-728 FGRAIN_GCLK_CTRL_1 0x4876

Bit(s)	R/W	Default	Description
31 :0	R/W	0	reg_fgrain_gclk_ctrl1: Gate clock control.

Table 10-729 FGRAIN_GCLK_CTRL_2 0x4877

Bit(s)	R/W	Default	Description
31 :0	R/W	0	reg_fgrain_gclk_ctrl2: Gate clock control.

Table 10-730 FGRAIN_PARAM_ADDR 0x4878

Bit(s)	R/W	Default	Description
31 :0	R/W	0	Parameter table index. it will increase automatically when read FGRAIN_PARAM_DATA

Amlogic Proprietary and Confidential
Copyright © Amlogic. All rights reserved.

Table 10-731 FGRAIN_PARAM_DATA 0x4879

Bit(s)	R/W	Default	Description
31 :0	RO	0	Parameter table data Index=0: mode parameter is ready scale parameter is ready noise table parameter is ready Index=1: Parameter: apply_grain Parameter: overlap Parameter: chroma_scaling_from_luma Parameter: clip_to_restricted_range Parameter: mc_identity [7:5] Parameter: data depth [11:8] Parameter: y_num_points [15:12] Parameter: cb_num_points [19:16] Parameter: cr_num_points Index=2: [15:0] Parameter: rand seed Index=3: [0] DMA status: 1 to indicate DMA transfer is too slow, finish after input data arrived

VD2 FGRAIN is same as vd1 FGRAIN , BASE_addr is from 0x4870 to 0x48f0

DI FGRAIN is same as vd1 FGRAIN , BASE_addr is from 0x4870 to 0x5440-0x56f0

10.2.3.9 NR2 Registers

Register Address

- DET3D_MOTN_CFG 0xff005cd0
- DET3D_CB_CFG 0xff005cd4
- DET3D_SPLT_CFG 0xff005cd8
- DET3D_HV_MUTE 0xff005cdc
- DET3D_MAT_STA_P1M1 0xff005ce0
- DET3D_MAT_STA_P1TH 0xff005ce4
- DET3D_MAT_STA_M1TH 0xff005ce8
- DET3D_MAT_STA_RSFT 0xff005cec
- DET3D_MAT_SYMTC_TH 0xff005cf0
- DET3D_RO_DET_CB_HOR 0xff005cf4
- DET3D_RO_DET_CB_VER 0xff005cf8
- DET3D_RO_SPLT_HT 0xff005cfc
- NR2_MET_NM_CTRL 0xff005d14
- NR2_MET_NM_YCTRL 0xff005d18
- NR2_MET_NM_CCTRL 0xff005d1c
- NR2_MET_NM_TNR 0xff005d20
- NR2_MET_NMFRM_TNR_YLEV 0xff005d24
- NR2_MET_NMFRM_TNR_YCNT 0xff005d28
- NR2_MET_NMFRM_TNR_CLEV 0xff005d2c
- NR2_MET_NMFRM_TNR_CCNT 0xff005d30
- NR2_3DEN_MODE 0xff005d34

Amlogic Proprietary and Confidential
Copyright © Amlogic. All rights reserved.

- NR2_SW_EN 0xff005d3c
- NR2_FRM_SIZE 0xff005d40
- NR2_SNR_SAD_CFG 0xff005d44
- NR2_MATNR_SNR_OS 0xff005d48
- NR2_MATNR_SNR_NRM_CFG 0xff005d4c
- NR2_MATNR_SNR_NRM_GAIN 0xff005d50
- NR2_MATNR_SNR_LPF_CFG 0xff005d54
- NR2_MATNR_SNR_USF_GAIN 0xff005d58
- NR2_MATNR_SNR_EDGE2B 0xff005d5c
- NR2_MATNR_BETA_EGAIN 0xff005d60
- NR2_MATNR_BETA_BRT 0xff005d64
- NR2_MATNR_XBETA_CFG 0xff005d68
- NR2_MATNR_YBETA_SCL 0xff005d6c
- NR2_MATNR_CBETA_SCL 0xff005d70
- NR2_SNR_MASK 0xff005d74
- NR2_SAD2NORM_LUT0 0xff005d78
- NR2_SAD2NORM_LUT1 0xff005d7c
- NR2_SAD2NORM_LUT2 0xff005d80
- NR2_SAD2NORM_LUT3 0xff005d84
- NR2_EDGE2BETA_LUT0 0xff005d88
- NR2_EDGE2BETA_LUT1 0xff005d8c
- NR2_EDGE2BETA_LUT2 0xff005d90
- NR2_EDGE2BETA_LUT3 0xff005d94
- NR2_MOTION2BETA_LUT0 0xff005d98
- NR2_MOTION2BETA_LUT1 0xff005d9c
- NR2_MOTION2BETA_LUT2 0xff005da0
- NR2_MOTION2BETA_LUT3 0xff005da4
- NR2_IIR_CTRL 0xff005d38
- NR2_MATNR_MTN_CRTL 0xff005da8
- NR2_MATNR_MTN_CRTL2 0xff005dac
- NR2_MATNR_MTN_COR 0xff005db0
- NR2_MATNR_MTN_GAIN 0xff005db4
- NR2_MATNR_DEGHOST 0xff005db8
- NR2_MATNR_ALPHALP_LUT0 0xff005dbc
- NR2_MATNR_ALPHALP_LUT1 0xff005dc0
- NR2_MATNR_ALPHALP_LUT2 0xff005dc4
- NR2_MATNR_ALPHALP_LUT3 0xff005dc8
- NR2_MATNR_ALPHAHP_LUT0 0xff005dcc
- NR2_MATNR_ALPHAHP_LUT1 0xff005dd0
- NR2_MATNR_ALPHAHP_LUT2 0xff005dd4
- NR2_MATNR_ALPHAHP_LUT3 0xff005dd8
- NR2_MATNR_MTNB_BRT 0xff005ddc
- NR2_CUE_MODE 0xff005de0
- NR2_CUE_CON_MOT_TH 0xff005de4

Amlogic Proprietary and Confidential
Copyright © Amlogic. All rights reserved.

- NR2_CUE_CON_DIF0 0xff005de8
- NR2_CUE_CON_DIF1 0xff005dec
- NR2_CUE_CON_DIF2 0xff005df0
- NR2_CUE_CON_DIF3 0xff005df4
- NR2_CUE_PRG_DIF 0xff005df8
- NR2_CONV_MODE 0xff005dfc
- DET3D_RO_SPLT_HB 0xff005e00
- DET3D_RO_SPLT_VL 0xff005e04
- DET3D_RO_SPLT_VR 0xff005e08
- DET3D_RO_MAT_LUMA_LR 0xff005e0c
- DET3D_RO_MAT_LUMA_TB 0xff005e10
- DET3D_RO_MAT_CHRU_LR 0xff005e14
- DET3D_RO_MAT_CHRU_TB 0xff005e18
- DET3D_RO_MAT_CHRV_LR 0xff005e1c
- DET3D_RO_MAT_CHRV_TB 0xff005e20
- DET3D_RO_MAT_HEDG_LR 0xff005e24
- DET3D_RO_MAT_HEDG_TB 0xff005e28
- DET3D_RO_MAT_VEDG_LR 0xff005e2c
- DET3D_RO_MAT_VEDG_TB 0xff005e30
- DET3D_RO_MAT_MOTN_LR 0xff005e34
- DET3D_RO_MAT_MOTN_TB 0xff005e38
- DET3D_RO_FRM_MOTN 0xff005e3c
- DET3D_RAMRD_ADDR_PORT 0xff005e68
- DET3D_RAMRD_DATA_PORT 0xff005e6c
- NR2_CFR_PARA_CFG0 0xff005e70
- NR2_CFR_PARA_CFG1 0xff005e74
- NR3_MODE 0xff00bfc0
- NR3_COOP_PARA 0xff00bfc4
- NR3_CNOOP_GAIN 0xff00bfc8
- NR3_YMOT_PARA 0xff00bfcc
- NR3_CMOT_PARA 0xff00bfd0
- NR3_SUREMOT_YGAIN 0xff00bfd4
- NR3_SUREMOT_CGAIN 0xff00bfd8

Register Description

Table 10-732 DET3D_MOTN_CFG 0x1734

Bit(s)	R/W	Default	Description
16	R/W	0	reg_det3d_intr_en : Det3d interrupt enable
9:8	R/W	0	reg_Det3D_Motion_Mode : U2 Different mode for Motion Calculation of Luma and Chroma: 0 : MotY, 1: (2*MotY + (MotU + MotV))/4; 2: Max(MotY, MotU, MotV); 3:Max(MotY, (MotU+MotV)/2)
7:4	R/W	0	reg_Det3D_Motion_Core_Rate : U4 K Rate to Edge (HV) details for coring of Motion Calculations, normalized to 32
3:0	R/W	0	reg_Det3D_Motion_Core_Thrd : U4 2X: static coring value for Motion Detection.

Amlogic Proprietary and Confidential
Copyright © Amlogic. All rights reserved.

Table 10-733 DET3D_CB_CFG 0x1735

Bit(s)	R/W	Default	Description
7:4	R/W	0	reg_Det3D_ChessBd_HV_ofst : U4, Noise immune offset for Horizontal or vertical combing detection.
3:0	R/W	0	reg_Det3D_ChessBd_NHV_ofst : U4, Noise immune offset for NON-Horizontal or vertical combing detection.

Table 10-734 DET3D_SPLT_CFG 0x1736

Bit(s)	R/W	Default	Description
7:4	R/W	0x0	reg_Det3D_SplitValid_ratio : U4, Ratio between max_value and the avg_value of the edge mapping for split line valid detection. The smaller of this value, the easier of the split line detected.
3:0	R/W	0x0	reg_Det3D_AvgIdx_ratio : U4, Ratio to the avg_value of the edge mapping for split line position estimation. The smaller of this value, the more samples will be added to the estimation.

Table 10-735 DET3D_HV_MUTE 0x1737

Bit(s)	R/W	Default	Description
23:20	R/W	0x0	reg_Det3D_Edge_Ver_Mute : U4 X2: Horizontal pixels to be mute from H/V Edge calculation Top and Bottom border part.
19:16	R/W	0x0	reg_Det3D_Edge_Hor_Mute : U4 X2: Horizontal pixels to be mute from H/V Edge calculation Left and right border part.
15:12	R/W	0x0	reg_Det3D_ChessBd_Ver_Mute : U4 X2: Horizontal pixels to be mute from ChessBoard statistics calculation in middle part
11:8	R/W	0x0	reg_Det3D_ChessBd_Hor_Mute : U4 X2: Horizontal pixels to be mute from ChessBoard statistics calculation in middle part
7:4	R/W	0x0	reg_Det3D_STA8X8_Ver_Mute : U4 1X: Vertical pixels to be mute from 8x8 statistics calculation in each block.
3:0	R/W	0x0	reg_Det3D_STA8X8_Hor_Mute : U4 1X: Horizontal pixels to be mute from 8x8 statistics calculation in each block.

Table 10-736 DET3D_MAT_STA_P1M1 0x1738

Bit(s)	R/W	Default	Description
31:24	R/W	0x0	reg_Det3D_STA8X8_P1_K0_R8 : U8 SAD to SAI ratio to decide P1, normalized to 256 (0.8)
23:16	R/W	0x0	reg_Det3D_STA8X8_P1_K1_R7 : U8 SAD to ENG ratio to decide P1, normalized to 128 (0.5)
15:8	R/W	0x0	reg_Det3D_STA8X8_M1_K0_R6 : U8 SAD to SAI ratio to decide M1, normalized to 64 (1.1)
7:0	R/W	0x0	reg_Det3D_STA8X8_M1_K1_R6 : U8 SAD to ENG ratio to decide M1, normalized to 64 (0.8)

Amlogic Proprietary and Confidential
Copyright © Amlogic. All rights reserved.

Table 10-737 DET3D_MAT_STA_P1TH 0x1739

Bit(s)	R/W	Default	Description
23:16	R/W	0x0	reg_Det3D_STAYUV_P1_TH_L4 : U8 SAD to ENG Thrd offset to decide P1, X16 (100)
15:8	R/W	0x0	reg_Det3D_STAEDG_P1_TH_L4 : U8 SAD to ENG Thrd offset to decide P1, X16 (80)
7:0	R/W	0x0	reg_Det3D_STAMOT_P1_TH_L4 : U8 SAD to ENG Thrd offset to decide P1, X16 (48)

Table 10-738 DET3D_MAT_STA_M1TH 0x173a

Bit(s)	R/W	Default	Description
23:16	R/W	0x0	reg_Det3D_STAYUV_M1_TH_L4 : U8 SAD to ENG Thrd offset to decide M1, X16 (100)
15:8	R/W	0x0	reg_Det3D_STAEDG_M1_TH_L4 : U8 SAD to ENG Thrd offset to decide M1, X16 (80)
7:0	R/W	0x0	reg_Det3D_STAMOT_M1_TH_L4 : U8 SAD to ENG Thrd offset to decide M1, X16 (64)

Table 10-739 DET3D_MAT_STA_RSFT 0x173b

Bit(s)	R/W	Default	Description
5:4	R/W	0x0	reg_Det3D_STAYUV_RSHFT : U2 YUV statistics SAD and SAI calculation result right shift bits to accommodate the 12bits clipping: 0 : mainly for images <=720x480: 1: mainly for images <=1366x768: 2: mainly for images <=1920X1080: 2; 3: other higher resolutions
3:2	R/W	0x0	reg_Det3D_STAEDG_RSHFT : U2 Horizontal and Vertical Edge Statistics SAD and SAI calculation result right shift bits to accommodate the 12bits clipping: 0 : mainly for images <=720x480: 1: mainly for images <=1366x768: 2: mainly for images <=1920X1080: 2; 3: other higher resolutions
1:0	R/W	0x0	reg_Det3D_STAMOT_RSHFT : U2 Motion SAD and SAI calculation result right shift bits to accommodate the 12bits clipping: 0 : mainly for images <=720x480: 1: mainly for images <=1366x768: 2: mainly for images <=1920X1080: 2; 3: other higher resolutions

Table 10-740 DET3D_MAT_SYMTC_TH 0x173c

Bit(s)	R/W	Default	Description
31:24	R/W	0x0	reg_Det3D_STALUM_symtc_Th : U8 threshold to decide if the Luma statistics is TB or LR symmetric.
23:16	R/W	0x0	reg_Det3D_STACHR_symtc_Th : U8 threshold to decide if the Chroma (UV) statistics is TB or LR symmetric.
15:8	R/W	0x0	reg_Det3D_STAEDG_symtc_Th : U8 threshold to decide if the Horizontal and Vertical Edge statistics is TB or LR symmetric.
7:0	R/W	0x0	reg_Det3D_STAMOT_symtc_Th : U8 threshold to decide if the Motion statistics is TB or LR symmetric.

Amlogic Proprietary and Confidential
Copyright © Amlogic. All rights reserved.

Table 10-741 DET3D_RO_DET_CB_HOR 0x173d

Bit(s)	R/W	Default	Description
31:16	R.O	0x0	RO_Det3D_ChessBd_NHor_value : U16 X64: number of Pixels of Horizontally Surely NOT matching Chessboard pattern.
15:0	R.O	0x0	RO_Det3D_ChessBd_Hor_value : U16 X64: number of Pixels of Horizontally Surely matching Chessboard pattern.

Table 10-742 DET3D_RO_DET_CB_VER 0x173e

Bit(s)	R/W	Default	Description
31:16	R.O	0x0	RO_Det3D_ChessBd_NVer_value : U16 X64: number of Pixels of Vertically Surely NOT matching Chessboard pattern.
15:0	R.O	0x0	RO_Det3D_ChessBd_Ver_value : U16 X64: number of Pixels of Vertically Surely matching Chessboard pattern.

Table 10-743 DET3D_RO_SPLT_HT 0x173f

Bit(s)	R/W	Default	Description
24	R.O	0x0	RO_Det3D_Split_HT_valid : U1 horizontal LR split border detected valid signal for top half picture
20:16	R.O	0x0	RO_Det3D_Split_HT_pxnum : U5 number of pixels included for the LR split position estimation for top half picture
9:0	R.O	0x0	RO_Det3D_Split_HT_idxX4 : S10 X4: horizontal pixel shifts of LR split position to the (ColMax/2) for top half picture

Table 10-744 NR2_MET_NM_CTRL 0x1745

Bit(s)	R/W	Default	Description
28	R/W	0x0	reg_NM_reset : Reset to the status of the Loop filter.
27:24	R/W	0x0	reg_NM_calc_length : Length mode of the Noise measurement sample number for statistics. 0 : 256 samples; 1: 512 samples; 2: 1024 samples; ¡X: 2^(8+x) samples
23:20	R/W	0x0	reg_NM_inc_step : Loop filter input gain increase step.
19:16	R/W	0x0	reg_NM_dec_step : Loop filter input gain decrease step.
15:8	R/W	0x0	reg_NM_YHPmot_thrd : Luma channel HP portion motion for condition of pixels included in Luma Noise measurement.
7:0	R/W	0x0	reg_NM_CHPmot_thrd : Chroma channel HP portion motion for condition of pixels included in Chroma Noise measurement.

Table 10-745 NR2_MET_NM_YCTRL 0x1746

Bit(s)	R/W	Default	Description
31:28	R/W	0x0	reg_NM_YPLL_target : Target rate of NM_Ynoise_thrd to mean of the Luma Noise
27:24	R/W	0x0	reg_NM_YLPmot_thrd : Luma channel LP portion motion for condition of pixels included in Luma Noise measurement.

Amlogic Proprietary and Confidential
Copyright © Amlogic. All rights reserved.

Bit(s)	R/W	Default	Description
23:16	R/W	0x0	reg_NM_YHPmot_thrd_min : Minimum threshold for Luma channel HP portion motion to decide whether the pixel will be included in Luma noise measurement.
15:8	R/W	0x0	reg_NM_YHPmot_thrd_max : Maximum threshold for Luma channel HP portion motion to decide whether the pixel will be included in Luma noise measurement.
7:0	R/W	0x0	reg_NM_Ylock_rate : Rate to decide whether the Luma noise measurement is lock or not.

Table 10-746 NR2_MET_NM_CCTRL 0x1747

Bit(s)	R/W	Default	Description
31:28	R/W	0x0	reg_NM_CPLL_target : Target rate of NM_Cnoise_thrd to mean of the Chroma Noise
27:24	R/W	0x0	reg_NM_CLPmot_thrd : Chroma channel LP portion motion for condition of pixels included in Chroma Noise measurement.
23:16	R/W	0x0	reg_NM_CHPmot_thrd_min : Minimum threshold for Chroma channel HP portion motion to decide whether the pixel will be included in Chroma noise measurement.
15:8	R/W	0x0	reg_NM_CHPmot_thrd_max : Maximum threshold for Chroma channel HP portion motion to decide whether the pixel will be included in Chroma noise measurement.
7:0	R/W	0x0	reg_NM_Clock_rate : Rate to decide whether the Chroma noise measurement is lock or not;

Table 10-747 NR2_MET_NM_TNR 0x1748

Bit(s)	R/W	Default	Description
25	R.O	0x0	ro_NM_TNR_Ylock : Read-only register to tell ifLuma channel noise measurement is locked or not.
24	R.O	0x0	ro_NM_TNR_Clock : Read-only register to tell if Chroma channel noise measurement is locked or not.
23:12	R.O	0x0	ro_NM_TNR_Ylevel : Read-only register to give Luma channel noise level. It was 16x of pixel difference in 8 bits of YHPmot.
11:0	R.O	0x0	ro_NM_TNR_Clevel : Read-only register to give Chroma channel noise level. It was 16x of pixel difference in 8 bits of CHPmot.

Table 10-748 NR2_MET_NMFRM_TNR_YLEV 0x1749

Bit(s)	R/W	Default	Description
28:0	R.O	0x0	ro_NMFrm_TNR_Ylevel : Frame based Read-only register to give Luma channel noise level within one frame/field.

Table 10-749 NR2_MET_NMFRM_TNR_YCNT 0x174a

Bit(s)	R/W	Default	Description
23:0	R.O	0x0	ro_NMFrm_TNR_Ycount : Number of Luma channel pixels included in Frame/Field based noise level measurement.

Amlogic Proprietary and Confidential
Copyright © Amlogic. All rights reserved.

Table 10-750 NR2_MET_NMFRM_TNR_CLEV 0x174b

Bit(s)	R/W	Default	Description
28:0	R.O	0x0	ro_NMFrm_TNR_Clevel : Frame based Read-only register to give Chroma channel noise level within one frame/field.

Table 10-751 NR2_MET_NMFRM_TNR_CCNT 0x174c

Bit(s)	R/W	Default	Description
23:0	R.O	0x0	ro_NMFrm_TNR_Ccount : Number of Chroma channel pixels included in Frame/Field based noise level measurement.

Table 10-752 NR2_3DEN_MODE 0x174d

Bit(s)	R/W	Default	Description
6:4	R/W	0x0	Blend_3dnr_en_r :
2:0	R/W	0x0	Blend_3dnr_en_l :

Table 10-753 NR2_IIR_CTRL 0x174e

Bit(s)	R/W	Default	Description
15:14	R/W	0x0	reg_LP_IIR_8bit_mode : LP IIR membitwidth mode:0: 10bits will be store in memory;1: 9bits will be store in memory; 2 : 8bits will be store in memory;3: 7bits will be store in memory;
13:12	R/W	0x0	reg_LP_IIR_mute_mode : Mode for the LP IIR mute,
11:8	R/W	0x0	reg_LP_IIR_mute_thrd : Threshold of LP IIR mute to avoid ghost:
7:6	R/W	0x0	reg_HP_IIR_8bit_mode : IIR membitwidth mode:0: 10bits will be store in memory;1: 9bits will be store in memory; 2 : 8bits will be store in memory;3: 7bits will be store in memory;
5:4	R/W	0x0	reg_HP_IIR_mute_mode : Mode for theLP IIR mute
3:0	R/W	0x0	reg_HP_IIR_mute_thrd : Threshold of HP IIR mute to avoid ghost

Table 10-754 NR2_SNR_SAD_CFG 0x1751

Bit(s)	R/W	Default	Description
12	R/W	0x1	reg_MATNR_SNR_SAD_CenRPL : U1, Enable signal for Current pixel position SAD to be replaced by SAD_min.0: do not replace Current pixel position SAD by SAD_min;1: do replacements
11:8	R/W	0x3	reg_MATNR_SNR_SAD_coring : Coring value of the intra-frame SAD. sum = (sum - reg_MATNR_SNR_SAD_coring);sum = (sum<0) ? 0: (sum>255)? 255: sum;
6:5	R/W	0x1	reg_MATNR_SNR_SAD_WinMod : Unsigned, Intra-frame SAD matching window mode:0: 1x1; 1: [1 1 1] 2: [1 2 1]; 3: [1 2 2 2 1];
4:0	R/W	0x1	Sad_coef_num : Sad coefficient

Amlogic Proprietary and Confidential
Copyright © Amlogic. All rights reserved.

Table 10-755 NR2_MATNR_SNR_OS 0x1752

Bit(s)	R/W	Default	Description
7:4	R/W	0x8	reg_MATNR_SNR_COS : SNR Filter overshoot control margin for UV channel (X2 to u10 scale)
3:0	R/W	0xd	reg_MATNR_SNR_YOS : SNR Filter overshoot control margin for luma channel (X2 to u10 scale)

Table 10-756 NR2_MATNR_SNR_NRM_CFG 0x1753

Bit(s)	R/W	Default	Description
23:16	R/W	0x40	reg_MATNR_SNR_NRM_ofst : Edge based SNR boosting normalization offset to SAD_max ;
15:8	R/W	0xff	reg_MATNR_SNR_NRM_max : Edge based SNR boosting normalization Max value
7:0	R/W	0x0	reg_MATNR_SNR_NRM_min : Edge based SNR boosting normalization Min value

Table 10-757 NR2_MATNR_SNR_NRM_GAIN 0x1754

Bit(s)	R/W	Default	Description
15:8	R/W	0x0	reg_MATNR_SNR_NRM_Cgain : Edge based SNR boosting normalization Gain for Chrm channel (norm 32 as 1)
7:0	R/W	0x20	reg_MATNR_SNR_NRM_Ygain : Edge based SNR boosting normalization Gain for Luma channel (norm 32 as 1)

Table 10-758 NR2_MATNR_SNR_LPF_CFG 0x1755

Bit(s)	R/W	Default	Description
23:16	R/W	0xc	reg_MATNR_SNRLPF_SADmaxTH : U8, Threshold to SADmax to use TNRLPF to replace SNRLPF. i.e.if (SAD_max<reg_MATNR_SNRLPF_SADmaxTH) SNRLPF_yuv[k] = TNRLPF_yuv[k];
13:11	R/W	0x2	reg_MATNR_SNRLPF_Cmode : LPF based SNR filtering mode on CHRM channel: 0 : gradient LPF [1 1]/2, 1: gradient LPF [2 1 1]/4; 2: gradient LPF [3 3 2]/8; 3: gradient LPF [5 4 4 3]/16; 4 : TNRLPF; 5 : CurLPF3x3_yuv[]; 6: CurLPF3o3_yuv [] 7: CurLPF3x5_yuv[]
10: 8	R/W	0x2	reg_MATNR_SNRLPF_Ymode : LPF based SNR filtering mode on LUMA channel: 0 : gradient LPF //Bit [1 1]/2, 1: gradient LPF [2 1 1]/4; 2: gradient LPF [3 3 2]/8;3: gradient LPF [5 4 4 3]/16; 4 : TNRLPF; 5 : CurLPF3x3_yuv[]; 6: CurLPF3o3_yuv[] 7: CurLPF3x5_yuv[]
7:4	R/W	0x6	reg_MATNR_SNRLPF_SADmin3TH : Offset threshold to SAD_min to Discard SAD_min3 corresponding pixel in LPF SNR filtering. (X8 to u8 scale)
3:0	R/W	0x4	reg_MATNR_SNRLPF_SADmin2TH : Offset threshold to SAD_min to Discard SAD_min2 corresponding pixel in LPF SNR filtering. (X8 to u8 scale)

Amlogic Proprietary and Confidential
Copyright © Amlogic. All rights reserved.

Table 10-759 NR2_MATNR_SNR_USF_GAIN 0x1756

Bit(s)	R/W	Default	Description
15:8	R/W	0x0	reg_MATNR_SNR_USF_Cgain : Un-sharp (HP) compensate back Chrm portion gain, (norm 64 as 1)
7:0	R/W	0x0	reg_MATNR_SNR_USF_Ygain : Un-sharp (HP) compensate back Luma portion gain, (norm 64 as 1)

Table 10-760 NR2_MATNR_SNR_EDGE2B 0x1757

Bit(s)	R/W	Default	Description
15:8	R/W	0x80	reg_MATNR_SNR_Edge2Beta_ofst : U8, Offset for Beta based on Edge.
7:0	R/W	0x10	reg_MATNR_SNR_Edge2Beta_gain : U8. Gain to SAD_min for Beta based on Edge. (norm 16 as 1)

Table 10-761 NR2_MATNR_BETA_EGAIN 0x1758

Bit(s)	R/W	Default	Description
15:8	R/W	0x20	reg_MATNR_CBeta_Egain : U8, Gain to Edge based Beta for Chrm channel. (normalized to 32 as 1)
7:0	R/W	0x20	reg_MATNR_YBeta_Egain : U8, Gain to Edge based Beta for Luma channel. (normalized to 32 as 1)

Table 10-762 NR2_MATNR_BETA_BRT 0x1759

Bit(s)	R/W	Default	Description
31:28	R/W	0x0	reg_MATNR_beta_BRT_limt_hi : U4, Beta adjustment based on Brightness high side Limit. (X16 to u8 scale)
27:24	R/W	0x0	reg_MATNR_beta_BRT_slop_hi : U4, Beta adjustment based on Brightness high side slope. Normalized to 16 as 1
23:16	R/W	0xa0	reg_MATNR_beta_BRT_thrd_hi : U8, Beta adjustment based on Brightness high threshold.(u8 scale)
15:12	R/W	0x6	reg_MATNR_beta_BRT_limt_lo : U4, Beta adjustment based on Brightness low side Limit. (X16 to u8 scale)
11:8	R/W	0x6	reg_MATNR_beta_BRT_slop_lo : U4, Beta adjustment based on Brightness low side slope. Normalized to 16 as 1
7:0	R/W	0x64	reg_MATNR_beta_BRT_thrd_lo : U8, Beta adjustment based on Brightness low threshold.(u8 scale)

Table 10-763 NR2_MATNR_XBETA_CFG 0x175a

Bit(s)	R/W	Default	Description
19:18	R/W	0x0	reg_MATNR_CBeta_use_mode : U2, Beta options (mux) from beta_motion and beta_edge for Chrm channel;
17:16	R/W	0x0	reg_MATNR_YBeta_use_mode : U2, Beta options (mux) from beta_motion and beta_edge for Luma channel;

Amlogic Proprietary and Confidential
Copyright © Amlogic. All rights reserved.

Bit(s)	R/W	Default	Description
15: 8	R/W	0x0	reg_MATNR_CBeta_Ofst : U8, Offset to Beta for Chrm channel.(after beta_edge and beta_motion mux)
7: 0	R/W	0x0	reg_MATNR_YBeta_Ofst : U8, Offset to Beta for Luma channel.(after beta_edge and beta_motion mux)

Table 10-764 NR2_MATNR_YBETA_SCL 0x175b

Bit(s)	R/W	Default	Description
31:24	R/W	0x3c	reg_MATNR_YBeta_scale_min : U8, Final step Beta scale low limit for Luma channel;
23:16	R/W	0xff	reg_MATNR_YBeta_scale_max : U8, Final step Beta scale high limit for Luma channe;
15: 8	R/W	0x20	reg_MATNR_YBeta_scale_gain : U8, Final step Beta scale Gain for Luma channel (normalized 32 to 1);
7 : 0	R/W	0x0	reg_MATNR_YBeta_scale_ofst : S8, Final step Beta scale offset for Luma channel ;

Table 10-765 NR2_MATNR_CBETA_SCL 0x175c

Bit(s)	R/W	Default	Description
31:24	R/W	0x0	reg_MATNR_CBeta_scale_min : Final step Beta scale low limit for Chrm channel.Similar to Y
23:16	R/W	0xff	reg_MATNR_CBeta_scale_max : U8, Final step Beta scale high limit for Chrm channel.Similar to Y
15: 8	R/W	0x20	reg_MATNR_CBeta_scale_gain : U8, Final step Beta scale Gain for Chrm channel Similar to Y
7: 0	R/W	0x0	reg_MATNR_CBeta_scale_ofst : S8, Final step Beta scale offset for Chrm channel Similar to Y

Table 10-766 NR2_SNR_MASK 0x175d

Bit(s)	R/W	Default	Description
20:0	R/W	0x0	SAD_MSK : Valid signal in the 3x7 SAD surface

Table 10-767 NR2_SAD2NORM_LUT0 0x175e

Bit(s)	R/W	Default	Description
31:24	R/W	0x72	reg_MATNR_SAD2Norm_LUT_3 : SAD convert normal LUT node 3
23:16	R/W	0x92	reg_MATNR_SAD2Norm_LUT_2 : SAD convert normal LUT node 2
15: 8	R/W	0xab	reg_MATNR_SAD2Norm_LUT_1 : SAD convert normal LUT node 1
7: 0	R/W	0xcd	reg_MATNR_SAD2Norm_LUT_0 : SAD convert normal LUT node 0

Amlogic Proprietary and Confidential
Copyright © Amlogic. All rights reserved.

Table 10-768 NR2_SAD2NORM_LUT1 0x175f

Bit(s)	R/W	Default	Description
31:24	R/W	0x1c	reg_MATNR_SAD2Norm_LUT_7 : SAD convert normal LUT node 7
23:16	R/W	0x23	reg_MATNR_SAD2Norm_LUT_6 : SAD convert normal LUT node 6
15: 8	R/W	0x31	reg_MATNR_SAD2Norm_LUT_5 : SAD convert normal LUT node 5
7: 0	R/W	0x4f	reg_MATNR_SAD2Norm_LUT_4 : SAD convert normal LUT node 4

Table 10-769 NR2_SAD2NORM_LUT2 0x1760

Bit(s)	R/W	Default	Description
31:24	R/W	0xf	reg_MATNR_SAD2Norm_LUT_11 : SAD convert normal LUT node 11
23:16	R/W	0x11	reg_MATNR_SAD2Norm_LUT_10 : SAD convert normal LUT node 10
15: 8	R/W	0x13	reg_MATNR_SAD2Norm_LUT_9 : SAD convert normal LUT node 9
7: 0	R/W	0x17	reg_MATNR_SAD2Norm_LUT_8 : SAD convert normal LUT node 8

Table 10-770 NR2_SAD2NORM_LUT3 0x1761

Bit(s)	R/W	Default	Description
31:24	R/W	0x8	reg_MATNR_SAD2Norm_LUT_15 : SAD convert normal LUT node 15
23:16	R/W	0x9	reg_MATNR_SAD2Norm_LUT_14 : SAD convert normal LUT node 14
15:8	R/W	0xa	reg_MATNR_SAD2Norm_LUT_13 : SAD convert normal LUT node 13
7:0	R/W	0xc	reg_MATNR_SAD2Norm_LUT_12 : SAD convert normal LUT node 12

Table 10-771 NR2_EDGE2BETA_LUT0 0x1762

Bit(s)	R/W	Default	Description
31:24	R/W	0x80	reg_MATNR_Edge2Beta_LUT_3 : Edge convert beta LUT node 3
23:16	R/W	0xa0	reg_MATNR_Edge2Beta_LUT_2 : Edge convert beta LUT node 2
15: 8	R/W	0xe0	reg_MATNR_Edge2Beta_LUT_1 : Edge convert beta LUT node 1
7: 0	R/W	0xff	reg_MATNR_Edge2Beta_LUT_0 : Edge convert beta LUT node 0

Table 10-772 NR2_EDGE2BETA_LUT1 0x1763

Bit(s)	R/W	Default	Description
31:24	R/W	0x4	reg_MATNR_Edge2Beta_LUT_7 : Edge convert beta LUT node 7
23:16	R/W	0x10	reg_MATNR_Edge2Beta_LUT_6 : Edge convert beta LUT node 6
15: 8	R/W	0x20	reg_MATNR_Edge2Beta_LUT_5 : Edge convert beta LUT node 5
7: 0	R/W	0x50	reg_MATNR_Edge2Beta_LUT_4 : Edge convert beta LUT node 4

Amlogic Proprietary and Confidential
Copyright © Amlogic. All rights reserved.

Table 10-773 NR2_EDGE2BETA_LUT2 0x1a64

Bit(s)	R/W	Default	Description
31:24	R/W	0x0	reg_MATNR_Edge2Beta_LUT_11 : Edge convert beta LUT node 11
23:16	R/W	0x0	reg_MATNR_Edge2Beta_LUT_10 : Edge convert beta LUT node 10
15: 8	R/W	0x0	reg_MATNR_Edge2Beta_LUT_9 : Edge convert beta LUT node 9
7: 0	R/W	0x2	reg_MATNR_Edge2Beta_LUT_8 : Edge convert beta LUT node 8

Table 10-774 NR2_EDGE2BETA_LUT3 0x1765

Bit(s)	R/W	Default	Description
31:24	R/W	0x0	reg_MATNR_Edge2Beta_LUT_15 : Edge convert beta LUT node 15
23:16	R/W	0x0	reg_MATNR_Edge2Beta_LUT_14 : Edge convert beta LUT node 14
15: 8	R/W	0x0	reg_MATNR_Edge2Beta_LUT_13 : Edge convert beta LUT node 13
7: 0	R/W	0x0	reg_MATNR_Edge2Beta_LUT_12 : Edge convert beta LUT node 12

Table 10-775 NR2_MOTION2BETA_LUT0 0x1766

Bit(s)	R/W	Default	Description
31:24	R/W	0x20	reg_MATNR_Mot2Beta_LUT_3 : Motion convert beta LUT node 3
23:16	R/W	0x10	reg_MATNR_Mot2Beta_LUT_2 : Motion convert beta LUT node 2
15: 8	R/W	0x4	reg_MATNR_Mot2Beta_LUT_1 : Motion convert beta LUT node 1
7: 0	R/W	0x0	reg_MATNR_Mot2Beta_LUT_0 : Motion convert beta LUT node 0

Table 10-776 NR2_MOTION2BETA_LUT1 0x1767

Bit(s)	R/W	Default	Description
31:24	R/W	0xc4	reg_MATNR_Mot2Beta_LUT_7 : Motion convert beta LUT node 7
23:16	R/W	0x80	reg_MATNR_Mot2Beta_LUT_6 : Motion convert beta LUT node 6
15: 8	R/W	0x40	reg_MATNR_Mot2Beta_LUT_5 : Motion convert beta LUT node 5
7: 0	R/W	0x30	reg_MATNR_Mot2Beta_LUT_4 : Motion convert beta LUT node 4

Table 10-777 NR2_MOTION2BETA_LUT2 0x1768

Bit(s)	R/W	Default	Description
31:24	R/W	0xff	reg_MATNR_Mot2Beta_LUT_11 : Motion convert beta LUT node 11
23:16	R/W	0xff	reg_MATNR_Mot2Beta_LUT_10 : Motion convert beta LUT node 10
15: 8	R/W	0xf0	reg_MATNR_Mot2Beta_LUT_9 : Motion convert beta LUT node 9
7: 0	R/W	0xe0	reg_MATNR_Mot2Beta_LUT_8 : Motion convert beta LUT node 8

Amlogic Proprietary and Confidential
Copyright © Amlogic. All rights reserved.

Table 10-778 NR2_MOTION2BETA_LUT3 0x1769

Bit(s)	R/W	Default	Description
31:24	R/W	0xff	reg_MATNR_Mot2Beta_LUT_15 : Motion convert beta LUT node 15
23:16	R/W	0xff	reg_MATNR_Mot2Beta_LUT_14 : Motion convert beta LUT node 14
15: 8	R/W	0xff	reg_MATNR_Mot2Beta_LUT_13 : Motion convert beta LUT node 13
7: 0	R/W	0xff	reg_MATNR_Mot2Beta_LUT_12 : Motion convert beta LUT node 12

Table 10-779 NR2_MATNR_MTN_CRTL 0x176a

Bit(s)	R/W	Default	Description
25:24	R/W	0x0	reg_MATNR_Vmtn_use_mode : Motion_yuvV channel motion selection mode:0: Vmot;1:Ymot/2 + (Umot+Vmot)/4; 2:Ymot/2 + max(Umot,Vmot)/2; 3: max(Ymot, Umot, Vmot)
21:20	R/W	0x0	reg_MATNR_Umtn_use_mode : Motion_yuvU channel motion selection mode:0: Umot;1:Ymot/2 + (Umot+Vmot)/4; 2:Ymot/2 + max(Umot,Vmot)/2; 3: max(Ymot, Umot, Vmot)
17:16	R/W	0x0	reg_MATNR_Ymtn_use_mode : Motion_yuvLuma channel motion selection mode:0: Ymot, 1: Ymot/2 + (Umot+Vmot)/4; 2: Ymot/2 + max(Umot,Vmot)/2; 3: max(Ymot,Umot, Vmot)
13:12	R/W	0x1	reg_MATNR_mtn_txt_mode : Texture detection mode for adaptive coring of HP motion
9: 8	R/W	0x1	reg_MATNR_mtn_cor_mode : Coring selection mode based on texture detection;
6: 4	R/W	0x8	reg_MATNR_mtn_hpf_mode : video mode of current and previous frame/field for MotHPF_yuv[k] calculation:
2: 0	R/W	0x6	reg_MATNR_mtn_lpf_mode : LPF video mode of current and previous frame/ field for MotLPF_yuv[k] calculation:

Table 10-780 NR2_MATNR_MTN_CRTL2 0x176b

Bit(s)	R/W	Default	Description
18:16	R/W	0x6	reg_MATNR_iir_BS_Ymode : IIR TNR filter Band split filter mode for Luma LPF result generation (Cur and Prev);
15: 8	R/W	0x40	reg_MATNR_mtnb_alpLP_Cgain : Scale of motion_brthp_uv to motion_brtlp_uv, normalized to 32 as 1
7: 0	R/W	0x40	reg_MATNR_mtnb_alpLP_Ygain : Scale of motion_brthp_y to motion_brtlp_y, normalized to 32 as 1

Table 10-781 NR2_MATNR_MTN_COR 0x176c

Bit(s)	R/W	Default	Description
15:12	R/W	0x3	reg_MATNR_mtn_cor_Cofst : Coring Offset for Chroma Motion.
11: 8	R/W	0x3	reg_MATNR_mtn_cor_Cgain : Gain to texture based coring for Chroma Motion. Normalized to 16 as 1
7: 4	R/W	0x3	reg_MATNR_mtn_cor_Yofst : Coring Offset for Luma Motion.
3: 0	R/W	0x3	reg_MATNR_mtn_cor_Ygain : Gain to texture based coring for Luma Motion. Normalized to 16 as 1

Amlogic Proprietary and Confidential
Copyright © Amlogic. All rights reserved.

Table 10-782 NR2_MATNR_MTN_GAIN 0x176d

Bit(s)	R/W	Default	Description
31:24	R/W	0x40	reg_MATNR_mtn_hp_Cgain : Gain to MotHPF_yuv[k] Chrm channel for motion calculation, normalized to 64 as 1
23:16	R/W	0x40	reg_MATNR_mtn_hp_Ygain : Gain to MotHPF_yuv[k] Luma channel for motion calculation, normalized to 64 as 1
15: 8	R/W	0x40	reg_MATNR_mtn_lp_Cgain : Gain to MotLPF_yuv[k] Chrm channel for motion calculation, normalized to 32 as 1
7: 0	R/W	0x40	reg_MATNR_mtn_lp_Ygain : Gain to MotLPF_yuv[k] Luma channel for motion calculation, normalized to 32 as 1

Table 10-783 NR2_MATNR_DEGHOST 0x176e

Bit(s)	R/W	Default	Description
30:28	R/W	0	reg_matnr_deghost_mode : // unsigned , default = 0 0:old_deghost; 1:soft_ denoise & strong_deghost; 2:strong_denoise & soft_deghost; 3:strong_denoise & strong_deghost
24:20	R/W	4	reg_matnr_deghost_ygain : // unsigned , default = 4
16:12	R/W	4	reg_matnr_deghost_cgain : // unsigned , default = 4
8	R/W	1	reg_matnr_deghost_en : // unsigned , default = 1 0: disable; 1: enable Enable signal for DeGhost function:0: disable; 1: enable
7: 4	R/W	3	reg_matnr_deghost_cos : // unsigned , default = 3 DeGhost Overshoot margin for UV channel, (X2 to u10 scale)
3: 0	R/W	3	reg_matnr_deghost_yos : // unsigned , default = 3 DeGhost Overshoot margin for Luma channel, (X2 to u10 scale)

Table 10-784 NR2_MATNR_ALPHALP_LUT0 0x176f

Bit(s)	R/W	Default	Description
31:24	R/W	0x40	reg_MATNR_AlphaLP_LUT_3 : Matnr low-pass filter alpha LUT node 3
23:16	R/W	0x80	reg_MATNR_AlphaLP_LUT_2 : Matnr low-pass filter alpha LUT node 2
15: 8	R/W	0x80	reg_MATNR_AlphaLP_LUT_1 : Matnr low-pass filter alpha LUT node 1
7: 0	R/W	0x80	reg_MATNR_AlphaLP_LUT_0 : Matnr low-pass filter alpha LUT node 0

Table 10-785 NR2_MATNR_ALPHALP_LUT1 0x1770

Bit(s)	R/W	Default	Description
31:24	R/W	0xff	reg_MATNR_AlphaLP_LUT_7 : Matnr low-pass filter alpha LUT node 7
23:16	R/W	0x80	reg_MATNR_AlphaLP_LUT_6 : Matnr low-pass filter alpha LUT node 6
15: 8	R/W	0x50	reg_MATNR_AlphaLP_LUT_5 : Matnr low-pass filter alpha LUT node 5
7: 0	R/W	0x40	reg_MATNR_AlphaLP_LUT_4 : Matnr low-pass filter alpha LUT node 4

Amlogic Proprietary and Confidential
Copyright © Amlogic. All rights reserved.

Table 10-786 NR2_MATNR_ALPHALP_LUT2 0x1771

Bit(s)	R/W	Default	Description
31:24	R/W	0xff	reg_MATNR_AlphaLP_LUT_11 : Matnr low-pass filter alpha LUT node 11
23:16	R/W	0xff	reg_MATNR_AlphaLP_LUT_10 : Matnr low-pass filter alpha LUT node 10
15: 8	R/W	0xff	reg_MATNR_AlphaLP_LUT_9 : Matnr low-pass filter alpha LUT node 9
7: 0	R/W	0xff	reg_MATNR_AlphaLP_LUT_8 : Matnr low-pass filter alpha LUT node 8

Table 10-787 NR2_MATNR_ALPHALP_LUT3 0x1772

Bit(s)	R/W	Default	Description
31:24	R/W	0xff	reg_MATNR_AlphaLP_LUT_15 : Matnr low-pass filter alpha LUT node 15
23:16	R/W	0xff	reg_MATNR_AlphaLP_LUT_14 : Matnr low-pass filter alpha LUT node 14
15: 8	R/W	0xff	reg_MATNR_AlphaLP_LUT_13 : Matnr low-pass filter alpha LUT node 13
7: 0	R/W	0xff	reg_MATNR_AlphaLP_LUT_12 : Matnr low-pass filter alpha LUT node 12

Table 10-788 NR2_MATNR_ALPHAHP_LUT0 0x1773

Bit(s)	R/W	Default	Description
31:24	R/W	0x40	reg_MATNR_AlphaHP_LUT_3 : Matnr high-pass filter alpha LUT node 3
23:16	R/W	0x80	reg_MATNR_AlphaHP_LUT_2 : Matnr high-pass filter alpha LUT node 2
15: 8	R/W	0x80	reg_MATNR_AlphaHP_LUT_1 : Matnr high-pass filter alpha LUT node 1
7: 0	R/W	0x80	reg_MATNR_AlphaHP_LUT_0 : Matnr high-pass filter alpha LUT node 0

Table 10-789 NR2_MATNR_ALPHAHP_LUT1 0x1774

Bit(s)	R/W	Default	Description
31:24	R/W	0xff	reg_MATNR_AlphaHP_LUT_7 : Matnr high-pass filter alpha LUT node 7
23:16	R/W	0x80	reg_MATNR_AlphaHP_LUT_6 : Matnr high-pass filter alpha LUT node 6
15: 8	R/W	0x50	reg_MATNR_AlphaHP_LUT_5 : Matnr high-pass filter alpha LUT node 5
7: 0	R/W	0x40	reg_MATNR_AlphaHP_LUT_4 : Matnr high-pass filter alpha LUT node 4

Table 10-790 NR2_MATNR_ALPHAHP_LUT2 0x1775

Bit(s)	R/W	Default	Description
31:24	R/W	0xff	reg_MATNR_AlphaHP_LUT_11 : Matnr high-pass filter alpha LUT node 11
23:16	R/W	0xff	reg_MATNR_AlphaHP_LUT_10 : Matnr high-pass filter alpha LUT node 10
15: 8	R/W	0xff	reg_MATNR_AlphaHP_LUT_9 : Matnr high-pass filter alpha LUT node 9
7: 0	R/W	0xff	reg_MATNR_AlphaHP_LUT_8 : Matnr high-pass filter alpha LUT node 8

Amlogic Proprietary and Confidential
Copyright © Amlogic. All rights reserved.

Table 10-791 NR2_MATNR_ALPHAHP_LUT3 0x1776

Bit(s)	R/W	Default	Description
31:24	R/W	0xff	reg_MATNR_AlphaHP_LUT_15 : Matnr high-pass filter alpha LUT node 15
23:16	R/W	0xff	reg_MATNR_AlphaHP_LUT_14 : Matnr high-pass filter alpha LUT node 14
15: 8	R/W	0xff	reg_MATNR_AlphaHP_LUT_13 : Matnr high-pass filter alpha LUT node 13
7: 0	R/W	0xff	reg_MATNR_AlphaHP_LUT_12 : Matnr high-pass filter alpha LUT node 12

Table 10-792 NR2_MATNR_MTNB_BRT 0x1777

Bit(s)	R/W	Default	Description
31:28	R/W	0x0	reg_MATNR_mtnb_BRT_limt_hi : Motion adjustment based on Brightness high side Limit. (X16 to u8 scale)
27:24	R/W	0x0	reg_MATNR_mtnb_BRT_slop_hi : Motion adjustment based on Brightness high side slope. Normalized to 16 as 1
23:16	R/W	0xa0	reg_MATNR_mtnb_BRT_thrd_hi : Motion adjustment based on Brightness high threshold.(u8 scale)
15:12	R/W	0x6	reg_MATNR_mtnb_BRT_limt_lo : Motion adjustment based on Brightness low side Limit. (X16 to u8 scale)
11: 8	R/W	0x6	reg_MATNR_mtnb_BRT_slop_lo : Motion adjustment based on Brightness low side slope. Normalized to 16 as 1
7: 0	R/W	0x64	reg_MATNR_mtnb_BRT_thrd_lo : Motion adjustment based on Brightness low threshold.(u8 scale)

Table 10-793 NR2_CUE_MODE 0x1778

Bit(s)	R/W	Default	Description
31:20	R/W	0x0	Reserved
19	R/W	0x0	Cue2_isabv_org_invert1
18	R/W	0x1	Cue2_valid_condition
17:16	R/W	0x1	Cue2_orgline_flt_sel
15:12	R/W	0x4	Cue2_orgline_flt_alph
11	R/W	0x0	Cue2_isabv_org_invert
10	R/W	0x0	Cue2_iscur_org_invert
9	R/W	0x0	Cue_enable_r : Cue right half frame enable
8	R/W	0x0	Cue_enable_l : Cue left half frame enable
6:4	R/W	0x0	reg_CUE_CON_RPLC_mode : U3, CUE pixel chroma replace mode;
3:0	R/W	0x0	reg_CUE_CHRM_FLT_mode : U4, CUE improvement filter mode,

Amlogic Proprietary and Confidential
Copyright © Amlogic. All rights reserved.

Table 10-794 NR2_CUE_CON_MOT_TH 0x1779

Bit(s)	R/W	Default	Description
31:24	R/W	0x0	reg_CUE_CON_Cmot_thrd2 : U8, Motion Detection threshold of up/down two rows, Chroma channel in Chroma Up-sampling Error (CUE) Detection (tighter).
23:16	R/W	0x0	reg_CUE_CON_Ymot_thrd2 : U8, Motion Detection threshold of up/mid/down three rows, Luma channel in Chroma Up-sampling Error (CUE) Detection (tighter).
15: 8	R/W	0x0	reg_CUE_CON_Cmot_thrd : U8, Motion Detection threshold of up/down two rows, Chroma channel in Chroma Up-sampling Error (CUE) Detection.
7: 0	R/W	0x0	reg_CUE_CON_Ymot_thrd : U8, Motion Detection threshold of up/mid/down three rows, Luma channel in Chroma Up-sampling Error (CUE) Detection.

Table 10-795 NR2_CUE_CON_DIF0 0x177a

Bit(s)	R/W	Default	Description
15:8	R/W	0x0	reg_CUE_CON_difP1_thrd : U8, P1 field Intra-Field top/below line chroma difference threshold,
7:0	R/W	0x0	reg_CUE_CON_difCur_thrd : U8, Current Field/Frame Intra-Field up/down line chroma difference threshold,

Table 10-796 NR2_CUE_CON_DIF1 0x177b

Bit(s)	R/W	Default	Description
19:16	R/W	0x0	reg_CUE_CON_rate0 : U4, The Krate to decide CUE by relationship between CUE_diflG and CUE_difEG
15: 8	R/W	0x0	reg_CUE_CON_difEG_thrd : U8, Threshold to the difference between current Field/Frame middle line to down line color channel(CUE_difEG).
7: 0	R/W	0x0	reg_CUE_CON_diflG_thrd : U8, Threshold to the difference between P1 field top line to current Field/Frame down line color channel (CUE_diflG).

Table 10-797 NR2_CUE_CON_DIF2 0x177c

Bit(s)	R/W	Default	Description
19:16	R/W	0x0	reg_CUE_CON_rate1 : U4, The Krate to decide CUE by relationship between CUE_difnC and CUE_difEC
15: 8	R/W	0x0	reg_CUE_CON_difEC_thrd : U8, Threshold to the difference between current Field/Frame middle line to up line color channel(CUE_difEC).
7: 0	R/W	0x0	reg_CUE_CON_difnC_thrd : U8, Threshold to the difference between P1 field bot line to current Field/Frame up line color channel (CUE_difnC).

Amlogic Proprietary and Confidential
Copyright © Amlogic. All rights reserved.

Table 10-798 NR2_CUE_CON_DIF3 0x177d

Bit(s)	R/W	Default	Description
19:16	R/W	0x0	reg_CUE_CON_rate2 : U4, The Krate to decide CUE by relationship between CUE_difP1 and CUE_difEP1
15: 8	R/W	0x0	reg_CUE_CON_difEP1_thrd : U8, Inter-Field top/below line to current field/frame middle line chroma difference (CUE_difEP1) threshold.
7: 0	R/W	0x0	reg_CUE_CON_difP1_thrd2 : U8, P1 field Intra-Field top/below line chroma difference threshold (tighter),

Table 10-799 NR2_CUE_PRG_DIF 0x177e

Bit(s)	R/W	Default	Description
20	R/W	0x0	reg_CUE_PRG_Enable : Enable bit for progressive video CUE detection.If interlace input video,
19:16	R/W	0x0	reg_CUE_PRG_rate : U3, The Krate to decide CUE by relationship between CUE_difCur and (CUE_difEC+CUE_difEG)
15: 8	R/W	0x0	reg_CUE_PRG_difCEG_thrd : U8, Current Frame Intra-Field up-mid and mid-down line chroma difference threshold for progressive video CUE detection,
7: 0	R/W	0x0	reg_CUE_PRG_difCur_thrd : U8, Current Frame Intra-Field up/down line chroma difference threshold,

Table 10-800 NR2_CONV_MODE 0x177f

Bit(s)	R/W	Default	Description
3:2	R/W	0x0	Conv_c444_mode : The format convert mode about 422 to 444 when data read out line buffer
1:0	R/W	0x0	Conv_c422_mode : the format convert mode about 444 to 422 when data write to line buffer

Table 10-801 DET3D_RO_SPLT_HB 0x1780

Bit(s)	R/W	Default	Description
24	R.O	0x0	RO_Det3D_Split_HB_valid : U1 horizontal LR split border detected valid signal for top half picture
20:16	R.O	0x0	RO_Det3D_Split_HB_pxnum : U5 number of pixels included for the LR split position estimation for top half picture
9: 0	R.O	0x0	RO_Det3D_Split_HB_idxX4 : S10 X4: horizontal pixel shifts of LR split position to the (ColMax/2) for top half picture

Amlogic Proprietary and Confidential
Copyright © Amlogic. All rights reserved.

Table 10-802 DET3D_RO_SPLT_VL 0x1781

Bit(s)	R/W	Default	Description
24	R.O	0x0	RO_Det3D_Split_VL_valid : U1 horizontal LR split border detected valid signal for top half picture
20:16	R.O	0x0	RO_Det3D_Split_VL_pxnum : U5 number of pixels included for the LR split position estimation for top half picture
9: 0	R.O	0x0	RO_Det3D_Split_VL_idxX4 : S10 X4: horizontal pixel shifts of LR split position to the (ColMax/2) for top half picture

Table 10-803 DET3D_RO_SPLT_VR 0x1782

Bit(s)	R/W	Default	Description
24	R.O	0x0	RO_Det3D_Split_VR_valid : U1 horizontal LR split border detected valid signal for top half picture
20:16	R.O	0x0	RO_Det3D_Split_VR_pxnum : U5 number of pixels included for the LR split position estimation for top half picture
9: 0	R.O	0x0	RO_Det3D_Split_VR_idxX4 : S10 X4: horizontal pixel shifts of LR split position to the (ColMax/2) for top half picture

Table 10-804 DET3D_RO_MAT_LUMA_LR 0x1783

Bit(s)	R/W	Default	Description
15:0	R.O	0x0	RO_Luma_LR_score : S2*8 LUMA statistics left right decision score for each band (8bands vertically), it can be -1/0/1:-1: most likely not LR symmetric 0: not sure 1: most likely LR symmetric
7:0	R.O	0x0	RO_Luma_LR_symtc : U1*8 Luma statistics left right pure symmetric for each band (8bands vertically), it can be 0/1: 0: not sure 1: most likely LR is pure symmetric
4:0	R.O	0x0	RO_Luma_LR_sum : S5 Total score of 8x8 Luma statistics for LR like decision, the larger this score, the more confidence that this is a LR 3D video. It is sum of RO_Luma_LR_score[0~7]

Table 10-805 DET3D_RO_MAT_LUMA_TB 0x1784

Bit(s)	R/W	Default	Description
15:0	R.O	0x0	RO_Luma_TB_score : S2*8 LUMA statistics Top/Bottom decision score for each band (8bands Horizontally),
7:0	R.O	0x0	RO_Luma_TB_symtc : Luma statistics Top/Bottom pure symmetric for each band (8bands Horizontally),
4:0	R.O	0x0	RO_Luma_TB_sum : Total score of 8x8 Luma statistics for TB like decision,

Amlogic Proprietary and Confidential
Copyright © Amlogic. All rights reserved.

Table 10-806 DET3D_RO_MAT_CHRU_LR 0x1785

Bit(s)	R/W	Default	Description
15:0	R.O	0x0	RO_ChrU_LR_score : S2*8 LUMA statistics left right decision score for each band (8bands vertically),
7:0	R.O	0x0	RO_ChrU_LR_symtc : CHRU statistics left right pure symmetric for each band (8bands vertically),
4:0	R.O	0x0	RO_ChrU_LR_sum : Total score of 8x8 ChrU statistics for LR like decision,

Table 10-807 DET3D_RO_MAT_CHRU_TB 0x1786

Bit(s)	R/W	Default	Description
15:0	R.O	0x0	RO_ChrU_TB_score : S2*8 CHRU statistics Top/Bottom decision score for each band (8bands Horizontally)
7:0	R.O	0x0	RO_ChrU_TB_symtc : CHRU statistics Top/Bottom pure symmetric for each band (8bands Horizontally)
4:0	R.O	0x0	RO_ChrU_TB_sum : Total score of 8x8 ChrU statistics for TB like decision

Table 10-808 DET3D_RO_MAT_CHRV_LR 0x1787

Bit(s)	R/W	Default	Description
15:0	R.O	0x0	RO_ChrV_LR_score : S2*8 CHRU statistics left right decision score for each band (8bands vertically)
7:0	R.O	0x0	RO_ChrV_LR_symtc : CHRV statistics left right pure symmetric for each band (8bands vertically)
4:0	R.O	0x0	RO_ChrV_LR_sum : Total score of 8x8 ChrV statistics for LR like decision

Table 10-809 DET3D_RO_MAT_CHRV_TB 0x1788

Bit(s)	R/W	Default	Description
15:0	R.O	0x0	RO_ChrV_TB_score : CHRV statistics Top/Bottom decision score for each band (8bands Horizontally)
7:0	R.O	0x0	RO_ChrV_TB_symtc : CHRV statistics Top/Bottom pure symmetric for each band (8bands Horizontally)
4:0	R.O	0x0	RO_ChrV_TB_sum : Total score of 8x8 ChrV statistics for TB like decision

Table 10-810 DET3D_RO_MAT_HEDG_LR 0x1789

Bit(s)	R/W	Default	Description
15:0	R.O	0x0	RO_Hedg_LR_score : Horizontal Edge statistics left right decision score for each band (8bands vertically)
7:0	R.O	0x0	RO_Hedg_LR_symtc : Horizontal Edge statistics left right pure symmetric for each band (8bands vertically)
4:0	R.O	0x0	RO_Hedg_LR_sum : Total score of 8x8 Hedg statistics for LR like decision

Amlogic Proprietary and Confidential
Copyright © Amlogic. All rights reserved.

Table 10-811 DET3D_RO_MAT_HEDG_TB 0x178a

Bit(s)	R/W	Default	Description
15:0	R.O	0x0	RO_Hedg_TB_score : Horizontal Edge statistics Top/Bottom decision score for each band (8bands Horizontally)
7:0	R.O	0x0	RO_Hedg_TB_symtc : Horizontal Edge statistics Top/Bottom pure symmetric for each band (8bands Horizontally)
4:0	R.O	0x0	RO_Hedg_TB_sum : Total score of 8x8 Hedg statistics for TB like decision

Table 10-812 DET3D_RO_MAT_VEDG_LR 0x178b

Bit(s)	R/W	Default	Description
15:0	R.O	0x0	RO_Vedg_LR_score : Vertical Edge statistics left right decision score for each band (8bands vertically)
7:0	R.O	0x0	RO_Vedg_LR_symtc : Vertical Edge statistics left right pure symmetric for each band (8bands vertically)
4:0	R.O	0x0	RO_Vedg_LR_sum : Total score of 8x8 Vedg statistics for LR like decision

Table 10-813 DET3D_RO_MAT_VEDG_TB 0x178c

Bit(s)	R/W	Default	Description
15:0	R.O	0x0	RO_Vedg_TB_score : Vertical Edge statistics Top/Bottom decision score for each band (8bands Horizontally)
7:0	R.O	0x0	RO_Vedg_TB_symtc : Vertical Edge statistics Top/Bottom pure symmetric for each band (8bands Horizontally)
4:0	R.O	0x0	RO_Vedg_TB_sum : Total score of 8x8 Vedg statistics for TB like decision

Table 10-814 DET3D_RO_MAT_MOTN_LR 0x178d

Bit(s)	R/W	Default	Description
15:0	R.O	0x0	RO_Motn_LR_score : Motion statistics left right decision score for each band (8bands vertically)
7:0	R.O	0x0	RO_Motn_LR_symtc : Motion statistics left right pure symmetric for each band (8bands vertically)
4:0	R.O	0x0	RO_Motn_LR_sum : Total score of 8x8 Motion statistics for LR like decision

Table 10-815 DET3D_RO_MAT_MOTN_TB 0x178e

Bit(s)	R/W	Default	Description
15:0	R.O	0x0	RO_Motn_TB_score : Motion statistics Top/Bottom decision score for each band (8bands Horizontally)
7:0	R.O	0x0	RO_Motn_TB_symtc : Motion statistics Top/Bottom pure symmetric for each band (8bands Horizontally)
4:0	R.O	0x0	RO_Motn_TB_sum : Total score of 8x8 Motion statistics for TB like decision

Amlogic Proprietary and Confidential
Copyright © Amlogic. All rights reserved.

Table 10-816 DET3D_RO_FRM_MOTN 0x178f

Bit(s)	R/W	Default	Description
15:0	R.O	0x0	RO_Det3D_Frame_Motion : U16 frame based motion value sum for still image decision in FW. mat ram read enter addr

DET3D_RAMRD_ADDR_PORT 0x179a

DET3D_RAMRD_DATA_PORT 0x179b

Table 10-817 NR2_CFR_PARA_CFG0 0x179c

Bit(s)	R/W	Default	Description
8	R/W	0x0	reg_CFR_CurDif_luma_mode : Current Field Top/Bottom line Luma difference calculation mode
7:6	R/W	0x0	reg_MACFR_frm_phase : U2 This will be a field based phase register that need to be set by FW phase to phase: this will be calculated based on dbdr_phase of the specific line of this frame. u1 : dbdr_phase=1, center line is DB in current line; dbdr_phase=2, center line is Dr in current line;
5:4	R/W	0x0	reg_CFR_CurDif_tran_mode : U2 Current Field Top/Bot line Luma/Chroma transition level calculation mode,
3:2	R/W	0x0	reg_CFR_alpha_mode : U2 Alpha selection mode for CFR block from curAlp and motAlp i.e. 0: motAlp; 1: (motAlp+curAlp)/2; 2: min(motAlp,curAlp); 3: max(motAlp,curAlp);
1:0	R/W	0x0	reg_CFR_Motion_Luma_mode : U2 LumaMotion Calculation mode for MA-CFR. 0: top/bot Lumma motion; 1: middle Luma Motion 2: top/bot + middle motion; 3: max(top/tot motion, middle motion)

Table 10-818 NR2_CFR_PARA_CFG1 0x179d

Bit(s)	R/W	Default	Description
23:16	R/W	0x0	reg_CFR_alpha_gain : gain to map muxed curAlp and motAlp to alpha that will be used for final blending.
15: 8	R/W	0x0	reg_CFR_Motion_ofst : Offset to Motion to calculate the motAlp, e,g:motAlp= reg_CFR_Motion_ofst- Motion;This register can be seen as the level of motion that we consider it at moving.
7: 0	R/W	0x0	reg_CFR_CurDif_gain : gain to CurDif to map to alpha, normalized to 32;

Table 10-819 NR3_MODE 0x2ff0

Bit(s)	R/W	Default	Description
5	R/W	0x0	reg_3dnr_nr3_vtxt_mode : ;
4	R/W	0x0	reg_3dnr_nr3_cbyy_ignor_coop : ; // u1: ignore coop condition for cbyy motion decision
3	R/W	0x0	reg_3dnr_nr3_ybyc_ignor_cnoop : ; // u1: ignore cnoop condition for ybyc motion decision
2:0	R/W	0x3	reg_3dnr_nr3_suremot_txt_mode : ; // u3: 0: cur, 1:p2; 2: (cur+p2)/2; 3/up: min (cur,p2)

Amlogic Proprietary and Confidential
Copyright © Amlogic. All rights reserved.

Table 10-820 NR3_COOP_PARA 0x2ff1

Bit(s)	R/W	Default	Description
21:20	R/W	0x2	reg_3dnr_nr3_coop_mode : ; // u2 0 original pixel 1: [1 2 1]/4 lpf; 2: [1 2 2 2 1]/8; 3: 3x3 lpf
19:16	R/W	0x8	reg_3dnr_nr3_coop_ratio : ; // u4 cur and p2 color oop decision ratio: (avg1< (MAX(sat0,sat2)*ratio/8 + ofst));
15:8	R/W	0x0	reg_3dnr_nr3_coop_ofset : ; // s8 cur and p2 color oop decision ofst: (avg1< (MAX(sat0,sat2)*ratio/8 + ofst));
7:0	R/W	0x0	reg_3dnr_nr3_coop_sat_thrd : ; // u8 cur and p2 color oop decision min(sat0, sat1) threshold;

Table 10-821 NR3_CNOOP_GAIN 0x2ff2

Bit(s)	R/W	Default	Description
23:20	R/W	0x8	reg_3dnr_nr3_cnoop_ratio0 : ; // u4 cur and p2 color noop decision ratio0: (avg1<(MAX(sat0,sat2)*ratio0/8 + ofst0));
19:16	R/W	0x8	reg_3dnr_nr3_cnoop_ratio1 : ; // u4 cur and p2 color noop decision ratio1: (dif1< (MIN(sat0,sat2)*ratio1/8 + ofst1));
15:8	R/W	0x19	reg_3dnr_nr3_cnoop_ofset0 : ; // s8 cur and p2 color noop decision ofset0: (avg1<(MAX(sat0,sat2)*ratio0/8 + ofst0));
7:0	R/W	0x0	reg_3dnr_nr3_cnoop_ofset1 : ; // s8 cur and p2 color noop decision ofset1: (dif1< (MIN(sat0,sat2)*ratio1/8 + ofst1));

Table 10-822 NR3_YMOT_PARA 0x2ff3

Bit(s)	R/W	Default	Description
19	R/W	0x1	reg_3dnr_nr3_ymot_only_en : ; // u1: enable signal for ignor chroma motion: (ytxt& coop)
18	R/W	0x1	reg_3dnr_nr3_ymot_only_cmtmode : ; // u1: 0: cmot=ymot; 1: cmot = MIN(ymot, cmot)
17:16	R/W	0x0	reg_3dnr_nr3_ymot_only_txtmode : ; // u2: 0, min(txt0,txt2); 1, max(txt0,txt2);2, (txt0+txt2)/2; 3: sat(txt0, txt2)
15:8	R/W	0xa	reg_3dnr_nr3_ymot_only_txtthrd : ; // u8: threshold to luma texture to decide use ymot only
7:0	R/W	0x1e	reg_3dnr_nr3_ymot_only_motthrd : ; // u8: threshold to luma motion to decide use ymot only

Table 10-823 NR3_CMOT_PARA 0x2ff4

Bit(s)	R/W	Default	Description
19	R/W	0x1	reg_3dnr_nr3_cmot_only_en : ; // u1: enable signal for ignor luma motion: (ctxt &cnoop)
18	R/W	0x0	reg_3dnr_nr3_cmot_only_ymtmode : ; // u1: 0: ymot=cmot+ymot/4; 1: ymot = MIN(ymot, cmot)
17:16	R/W	0x0	reg_3dnr_nr3_cmot_only_txtmode : ; // u2: 0, min(txt0,txt2); 1, max(txt0,txt2);2, (txt0+txt2)/2; 3: sat(txt0, txt2)

Amlogic Proprietary and Confidential
Copyright © Amlogic. All rights reserved.

Bit(s)	R/W	Default	Description
15:8	R/W	0x14	reg_3dnr_nr3_cmot_only_txtthrd : ; // u8: threshold to chroma texture to decide use cmot only
7:0	R/W	0xf	reg_3dnr_nr3_cmot_only_motthrd : ; // u8: threshold to chroma motion to decide use cmot only

Table 10-824 NR3_SUREMOT_YGAIN 0x2ff5

Bit(s)	R/W	Default	Description
31:24	R/W	0x10	reg_3dnr_nr3_suremot_dec_yrate : ; // u8: (norm 16)lpfMot>(dec_rate*txt +ofst) then force lpfMot*frc_gain+frc_ofset
23:16	R/W	0xc	reg_3dnr_nr3_suremot_dec_yofst : ; // u8: lpfMot>(dec_rate*txt +ofst) then force lpfMot*frc_gain+frc_ofset
15:8	R/W	0x40	reg_3dnr_nr3_suremot_frc_ygain : ; // u8: (norm 8)lpfMot>(dec_rate*txt +ofst) then force lpfMot*frc_gain+frc_ofset
7:0	R/W	0x14	reg_3dnr_nr3_suremot_frc_yofst : ; // u8: lpfMot>(dec_rate*txt +ofst) then force lpfMot*frc_gain+frc_ofset

Table 10-825 NR3_SUREMOT_CGAIN 0x2ff6

Bit(s)	R/W	Default	Description
31:24	R/W	0x22	reg_3dnr_nr3_suremot_dec_crate : ; // u8: (norm 16)lpfMot>(dec_rate*txt +ofst) then force lpfMot*frc_gain+frc_ofset
23:16	R/W	0x26	reg_3dnr_nr3_suremot_dec_cofst : ; // u8: lpfMot>(dec_rate*txt +ofst) then force lpfMot*frc_gain+frc_ofset
15:8	R/W	0x40	reg_3dnr_nr3_suremot_frc_cgain : ; // u8: (norm 8)lpfMot>(dec_rate*txt +ofst) then force lpfMot*frc_gain+frc_ofset
7:0	R/W	0x14	reg_3dnr_nr3_suremot_frc_cofst : ; // u8: lpfMot>(dec_rate*txt +ofst) then force lpfMot*frc_gain+frc_ofset

10.2.3.10 LBUF Registers

Table 10-826 LBUF_TOP_CTRL 0xff00bffc

Bit(s)	R/W	Default	Description
25:20	R/W	6'd0	gate clk control of line buf . LBUF_TOP_CTRL[25:24] is the clk control of current line linebuffer. LBUF_TOP_CTRL[23:22] is the clk control of previous one line.linebuffer, LBUF_TOP_CTRL[21:20] is the clk control of previous two line linebuffer.
17	R/W	1'b1	lbuf_fmt444_mode; format of data store in linebuf ,high mean store 444 data into linebuf
16	R/W	1'b1	lbuf_line5_mode;Store 5 line or 3 lines in linebuf ,high means 5 lines
12:0	R/W	13'd342	pre_lbuf_size: size of linebuf

Amlogic Proprietary and Confidential
Copyright © Amlogic. All rights reserved.

10.2.3.11 DI_SCALE Registers

Register Address

- DI_SCO_FIFO_CTRL 0xff00dd38
- DI_SC_TOP_CTRL 0xff00dd3c
- DI_SC_DUMMY_DATA 0xff00dd40
- DI_SC_LINE_IN_LENGTH 0xff00dd44
- DI_SC_PIC_IN_HEIGHT 0xff00dd48
- DI_SC_COEF_IDX 0xff00dd4c
- DI_SC_COEF 0xff00dd50
- DI_VSC_REGION12_STARTP 0xff00dd54
- DI_VSC_REGION34_STARTP 0xff00dd58
- DI_VSC_REGION4_ENDP 0xff00dd5c
- DI_VSC_START_PHASE_STEP 0xff00dd60
- DI_VSC_REGION0_PHASE_SLOPE 0xff00dd64
- DI_VSC_REGION1_PHASE_SLOPE 0xff00dd68
- DI_VSC_REGION3_PHASE_SLOPE 0xff00dd6c
- DI_VSC_REGION4_PHASE_SLOPE 0xff00dd70
- DI_VSC_PHASE_CTRL 0xff00dd74
- DI_VSC_INI_PHASE 0xff00dd78
- DI_HSC_REGION12_STARTP 0xff00dd80
- DI_HSC_REGION34_STARTP 0xff00dd84
- DI_HSC_REGION4_ENDP 0xff00dd88
- DI_HSC_START_PHASE_STEP 0xff00dd8c
- DI_HSC_REGION0_PHASE_SLOPE 0xff00dd90
- DI_HSC_REGION1_PHASE_SLOPE 0xff00dd94
- DI_HSC_REGION3_PHASE_SLOPE 0xff00dd98
- DI_HSC_REGION4_PHASE_SLOPE 0xff00dd9c
- DI_HSC_PHASE_CTRL 0xff00dda0
- DI_SC_MISC 0xff00dda4
- DI_HSC_PHASE_CTRL1 0xff00dda8
- DI_HSC_INI_PAT_CTRL 0xff00ddac
- DI_SC_GCLK_CTRL 0xff00ddb0
- DI_SC_HOLD_LINE 0xff00ddb4
- DI_HDR_IN_HSIZE 0xff00ddb8
- DI_HDR_IN_VSIZE 0xff00ddbc
- DI_HDR2_CTRL 0xff00ddc0
- DI_HDR2_CLK_GATE 0xff00ddc4
- DI_HDR2_MATRIXI_COEF00_01 0xff00ddc8
- DI_HDR2_MATRIXI_COEF02_10 0xff00ddcc
- DI_HDR2_MATRIXI_COEF11_12 0xff00ddd0
- DI_HDR2_MATRIXI_COEF20_21 0xff00ddd4
- DI_HDR2_MATRIXI_COEF22 0xff00ddd8
- DI_HDR2_MATRIXI_COEF30_31 0xff00dddc

Amlogic Proprietary and Confidential
Copyright © Amlogic. All rights reserved.

- DI_HDR2_MATRIXI_COEF32_40 0xff00dde0
- DI_HDR2_MATRIXI_COEF41_42 0xff00dde4
- DI_HDR2_MATRIXI_OFFSET0_1 0xff00dde8
- DI_HDR2_MATRIXI_OFFSET2 0xff00ddec
- DI_HDR2_MATRIXI_PRE_OFFSET0_1 0xff00ddf0
- DI_HDR2_MATRIXI_PRE_OFFSET2 0xff00ddf4
- DI_HDR2_MATRIXO_COEF00_01 0xff00ddf8
- DI_HDR2_MATRIXO_COEF02_10 0xff00ddfc
- DI_HDR2_MATRIXO_COEF11_12 0xff00de00
- DI_HDR2_MATRIXO_COEF20_21 0xff00de04
- DI_HDR2_MATRIXO_COEF22 0xff00de08
- DI_HDR2_MATRIXO_COEF30_31 0xff00de0c
- DI_HDR2_MATRIXO_COEF32_40 0xff00de10
- DI_HDR2_MATRIXO_COEF41_42 0xff00de14
- DI_HDR2_MATRIXO_OFFSET0_1 0xff00de18
- DI_HDR2_MATRIXO_OFFSET2 0xff00de1c
- DI_HDR2_MATRIXO_PRE_OFFSET0_1 0xff00de20
- DI_HDR2_MATRIXO_PRE_OFFSET2 0xff00de24
- DI_HDR2_MATRIXI_CLIP 0xff00de28
- DI_HDR2_MATRIXO_CLIP 0xff00de2c
- DI_HDR2_CGAIN_OFFT 0xff00de30
- DI_EOTF_LUT_ADDR_PORT 0xff00de38
- DI_EOTF_LUT_DATA_PORT 0xff00de3c
- DI_OETF_LUT_ADDR_PORT 0xff00de40
- DI_OETF_LUT_DATA_PORT 0xff00de44
- DI_CGAIN_LUT_ADDR_PORT 0xff00de48
- DI_CGAIN_LUT_DATA_PORT 0xff00de4c
- DI_HDR2_CGAIN_COEF0 0xff00de50
- DI_HDR2_CGAIN_COEF1 0xff00de54
- DI_OGAIN_LUT_ADDR_PORT 0xff00de58
- DI_OGAIN_LUT_DATA_PORT 0xff00de5c
- DI_HDR2_ADPS_CTRL 0xff00de60
- DI_HDR2_ADPS_ALPHA0 0xff00de64
- DI_HDR2_ADPS_ALPHA1 0xff00de68
- DI_HDR2_ADPS_BETA0 0xff00de6c
- DI_HDR2_ADPS_BETA1 0xff00de70
- DI_HDR2_ADPS_BETA2 0xff00de74
- DI_HDR2_ADPS_COEF0 0xff00de78
- DI_HDR2_ADPS_COEF1 0xff00de7c
- DI_HDR2_GMUT_CTRL 0xff00de80
- DI_HDR2_GMUT_COEF0 0xff00de84
- DI_HDR2_GMUT_COEF1 0xff00de88
- DI_HDR2_GMUT_COEF2 0xff00de8c
- DI_HDR2_GMUT_COEF3 0xff00de90

Amlogic Proprietary and Confidential
Copyright © Amlogic. All rights reserved.

- DI_HDR2_GMUT_COEF4 0xff00de94
- DI_HDR2_PIPE_CTRL1 0xff00de98
- DI_HDR2_PIPE_CTRL2 0xff00de9c
- DI_HDR2_PIPE_CTRL3 0xff00dea0
- DI_HDR2_PROC_WIN1 0xff00dea4
- DI_HDR2_PROC_WIN2 0xff00dea8
- DI_HDR2_MATRIXI_EN_CTRL 0xff00deac
- DI_HDR2_MATRIXO_EN_CTRL 0xff00deb0

Register Description

Table 10-827 DI_SCO_FIFO_CTRL 0x374e

Bit(s)	R/W	Default	Description
28:0	R/W	0x0	sco_fifo_ctrl

Table 10-828 DI_SC_TOP_CTRL 0x374f

Bit(s)	R/W	Default	Description
31	R.O	0	prog_interlace : no use // unsigned , default = 0x0
30	R/W	0	path_sel : 1 : di pre scaler for nr inp 0: di post scaler // unsigned , default = 0x0
29	R/W	0	go_field_sel : 1 : di pre go field 0: di post go filed // unsigned , default = 0x0
28	R/W	0	sw_resets : // unsigned , default = 0x0
27	R/W	0	pps_dummy_data_mode : 1: use low 8 bits 0: use high 8 bits // unsigned , default = 0x0
26	R/W	0	field_inv : field reverse// unsigned , default = 0x0
25	R/W	0	reg_field : no use// unsigned , default = 0x0
5:4	R/W	0	hdr_gclk_ctrl : 01 : no cbus clock for hdr other: free cbus clock for hdr // unsigned , default = 0x0
1	R/W	0	reg_gclk_ctrl : 1 : free clock for di scaler register 0: auto gate for di scalercbus // unsigned , default = 0x0

Table 10-829 DI_SC_DUMMY_DATA 0x3750

Bit(s)	R/W	Default	Description
29:20	R/W	0	VD1_SC_Y : // unsigned , default = 0x10,dummy data used in the VD1 scaler,according VPP_DOLBY_CTRL[17] 1:set 8bit value 2:set 10bit value
19:10	R/W	0	VD1_SC_CB : // unsigned , default = 0x80,dummy data used in the VD1 scaler, according VPP_DOLBY_CTRL[17] 1:set 8bit value 2:set 10bit value
9 :0	R/W	0	VD1_SC_CR : // unsigned , default = 0x80,dummy data used in the VD1 scaler, according VPP_DOLBY_CTRL[17] 1:set 8bit value 2:set 10bit value

Table 10-830 DI_SC_LINE_IN_LENGTH 0x3751

Bit(s)	R/W	Default	Description
13:0	R/W	14	line_in_length : // unsigned , default = 14'd1920,VD1 scaler input hsize

Amlogic Proprietary and Confidential
Copyright © Amlogic. All rights reserved.

Table 10-831 DI_SC_PIC_IN_HEIGHT 0x3752

Bit(s)	R/W	Default	Description
12:0	R/W	0x1fff	line_in_height : // unsigned , default = 13'h1fff,VD1 scaler input vsize

Table 10-832 DI_SC_COEF_IDX 0x3753

Bit(s)	R/W	Default	Description
15	R/W	0	index_inc : // unsigned , default = 0x0 ,index increment, if bit9 = 1 then (0: index increase 1, 1: index increase 2) else (index increase 2)
14	R/W	0	rd_cbus_coef_en : // unsigned , default = 0x0 ,1: read coef through cbus enable, just for debug purpose in case when we wanna check the coef in ram in correct or not
13	R/W	0	vf_sep_coef_en : // unsigned , default = 0x0 ,if true, vertical separated coef enable
9	R/W	0	high_reso_en : // unsigned , default = 0x0 ,if true, use 9bit resolution coef, other use 8bit resolution coef
8:7	R/W	0	type_index : // unsigned , default = 0x0 ,type of index, 00: vertical coef, 01: vertical chroma coef: 10: horizontal coef, 11: resevered
6:0	R/W	0	coef_index : // unsigned , default = 0x0 ,coef index

Table 10-833 DI_SC_COEF 0x3754

Bit(s)	R/W	Default	Description
31:24	R/W	0	coef0 : //signed , default = 0x0 , coefficients for vertical filter and horizontal filter
23:16	R/W	0	coef1 : //signed , default = 0x0 , coefficients for vertical filter and horizontal filter
15:8	R/W	0	coef2 : //signed , default = 0x0 , coefficients for vertical filter and horizontal filter
7 :0	R/W	0	coef3 : //signed , default = 0x0 , coefficients for vertical filter and horizontal filter

Table 10-834 DI_VSC_REGION12_STARTP 0x3755

Bit(s)	R/W	Default	Description
28:16	R/W	0	region1_startp : //unsigned , default = 0 ,region1 startp
12:0	R/W	0	region2_startp : //unsigned , default = 0 ,region2 startp

Table 10-835 DI_VSC_REGION34_STARTP 0x3756

Bit(s)	R/W	Default	Description
28:16	R/W	0	region3_startp : //unsigned , default = 0x0438,region3 startp
12:0	R/W	0	region4_startp : //unsigned , default = 0x0438,region4 startp

Amlogic Proprietary and Confidential
Copyright © Amlogic. All rights reserved.

Table 10-836 DI_VSC_REGION4_ENDP 0x3757

Bit(s)	R/W	Default	Description
12:0	R/W	13	region4_endp : //unsigned , default = 13'd1079 ,region4 endp

Table 10-837 DI_VSC_START_PHASE_STEP 0x3758

Bit(s)	R/W	Default	Description
27:24	R/W	1	integer_part : //unsigned , default = 1,vertical start phase step, (source/dest)* (2^24),integer part of step
23:0	R/W	0	fraction_part : //unsigned , default = 0,vertical start phase step, (source/dest)* (2^24),fraction part of step

Table 10-838 DI_VSC_REGION0_PHASE_SLOPE 0x3759

Bit(s)	R/W	Default	Description
24:0	R/W	0	region0_phase_slope : //signed , default = 0,vertical scaler region0 phase slope, region0 phase slope

Table 10-839 DI_VSC_REGION1_PHASE_SLOPE 0x375a

Bit(s)	R/W	Default	Description
24:0	R/W	0	region1_phase_slope : //signed , default = 0,region1 phase slope

Table 10-840 DI_VSC_REGION3_PHASE_SLOPE 0x375b

Bit(s)	R/W	Default	Description
24:0	R/W	0	region3_phase_slope : //signed , default = 0,region3 phase slope

Table 10-841 DI_VSC_REGION4_PHASE_SLOPE 0x375c

Bit(s)	R/W	Default	Description
24:0	R/W	0	region4_phase_slope : //signed , default = 0,region4 phase slope

Table 10-842 DI_VSC_PHASE_CTRL 0x375d

Bit(s)	R/W	Default	Description
18:17	R/W	0	vsc_double_line_mode : //unsigned , default = 0, double line mode, input/output line width of vscaler becomes 2X, so only 2 line buffer in this case, use for 3D line by line interleave scaling bit1 true, double the input width and half input height, bit0 true, change line buffer 2 lines instead of 4 lines
16	R.O	0	prog_interlace : //unsigned , default = 0,0: progressive output, 1: interlace output
15	R/W	0	vsc_bot_l0_out_en : //unsigned , default = 0,vertical scaler output line0 in advance or not for bottom field
14:13	R/W	1	vsc_bot_rpt_l0_num : //unsigned , default = 1,vertical scaler initial repeat line0 number for bottom field

Amlogic Proprietary and Confidential
Copyright © Amlogic. All rights reserved.

Bit(s)	R/W	Default	Description
11:8	R/W	4	vsc_bot_ini_rcv_num : //unsigned , default = 4,vertical scaler initial receiving number for bottom field
7	R/W	0	vsc_top_l0_out_en : //unsigned , default = 0,vertical scaler output line0 in advance or not for top field
6:5	R/W	1	vsc_top_rpt_l0_num : //unsigned , default = 1,vertical scaler initial repeat line0 number for top field
3:0	R/W	4	vsc_top_ini_rcv_num : //unsigned , default = 4,vertical scaler initial receiving number for top field

Table 10-843 DI_VSC_INI_PHASE 0x375e

Bit(s)	R/W	Default	Description
31:16	R/W	0	vertical scaler field initial phase for bottom field
15:0	R/W	0	vertical scaler field initial phase for top field

Table 10-844 DI_HSC_REGION12_STARTP 0x3760

Bit(s)	R/W	Default	Description
28:16	R/W	0	region1_startp : //unsigned , default = 0,region1 startp
12:0	R/W	0	region2_startp : //unsigned , default = 0,region2 startp

Table 10-845 DI_HSC_REGION34_STARTP 0x3761

Bit(s)	R/W	Default	Description
28:16	R/W	0	region3 : startp //unsigned , default = 0x780,region3 startp
12:0	R/W	0	region4 : startp //unsigned , default = 0x780,region4 startp

Table 10-846 DI_HSC_REGION4_ENDP 0x3762

Bit(s)	R/W	Default	Description
12:0	R/W	13	region4 : startp //unsigned , default = 13'd1919,region4 startp

Table 10-847 DI_HSC_START_PHASE_STEP 0x3763

Bit(s)	R/W	Default	Description
27:24	R/W	1	integer_part : //unsigned , default = 1, integer part of step
23:0	R/W	0	fraction_part : //unsigned , default = 0, fraction part of step

Table 10-848 DI_HSC_REGION0_PHASE_SLOPE 0x3764

Bit(s)	R/W	Default	Description
24:0	R/W	0	region0_phase_slope : //signed , default = 0,region0 phase slope

Amlogic Proprietary and Confidential
Copyright © Amlogic. All rights reserved.

Table 10-849 DI_HSC_REGION1_PHASE_SLOPE 0x3765

Bit(s)	R/W	Default	Description
24:0	R/W	0	region0_phase_slope : //signed , default = 0,region1 phase slope

Table 10-850 DI_HSC_REGION3_PHASE_SLOPE 0x3766

Bit(s)	R/W	Default	Description
24:0	R/W	0	region0_phase_slope : //signed , default = 0,region3 phase slope

Table 10-851 DI_HSC_REGION4_PHASE_SLOPE 0x3767

Bit(s)	R/W	Default	Description
24:0	R/W	0	region0_phase_slope : //signed , default = 0,region4 phase slope

Table 10-852 DI_HSC_PHASE_CTRL 0x3768

Bit(s)	R/W	Default	Description
22:21	R/W	1	hsc_rpt_p0_num0 : //unsigned , default = 1 ,horizontal scaler initial repeat pixel0 number0
19:16	R/W	4	hsc_ini_rcv_num0 : //unsigned , default = 4 ,horizontal scaler initial receiving number0
15:0	R/W	0	hsc_ini_phase0 : //unsigned , default = 0 ,horizontal scaler top field initial phase0

Table 10-853 DI_SC_MISC 0x3769

Bit(s)	R/W	Default	Description
22	R/W	0	hsc_len_div2_en : //unsigned , default = 0 ,if true, divide VSC line length 2 as the HSC input length, othwise VSC length length is the same as the VSC line length just for special usage, more flexibilityi
21	R/W	0	lbuf_mode : //unsigned , default = 0 ,if true, prevsc uses lin buffer, otherwise prevsc does not use line buffer, it should be same as prevsc_en
20	R/W	0	prehsc_en : //unsigned , default = 0 ,prehsc_en
19	R/W	0	prevsc_en : //unsigned , default = 0 ,prevsc_en
18	R/W	0	vsc_en : //unsigned , default = 0 ,vsc_en
17	R/W	0	hsc_en : //unsigned , default = 0 ,hsc_en
16	R/W	0	sc_top_en : //unsigned , default = 0 ,scale_top_en
15	R/W	0	sc_vd_en : //unsigned , default = 0 ,video1 scale out enable
12	R/W	1	hsc_nonlinear_4region_en : //unsigned , default = 1 ,if true, region0,region4 are nonlinear regions, otherwise they are not scaling regions, for horizontal scaler
10:8	R/W	0	hsc_bank_length : //unsigned , default = 0 ,horizontal scaler bank length
5	R/W	4	vsc_phase_field_mode : //unsigned , default = 4 ,vertical scaler phase field mode, if true, disable the opposite parity line output, more bandwith needed if output 1080i

Amlogic Proprietary and Confidential
Copyright © Amlogic. All rights reserved.

Bit(s)	R/W	Default	Description
4	R/W	0	vsc_nonlinear_4region_en : //unsigned , default = 0 ,if true, region0,region4 are nonlinear regions, otherwise they are not scaling regions, for vertical scaler
2:0	R/W	4	vsc_bank_length : //unsigned , default = 4 ,vertical scaler bank length

Table 10-854 DI_HSC_PHASE_CTRL1 0x376a

Bit(s)	R/W	Default	Description
22:21	R/W	1	hsc_rpt_p0_num0 : //unsigned , default = 1 ,horizontal scaler initial repeat pixel0 number0
19:16	R/W	4	hsc_ini_rcv_num0 : //unsigned , default = 4 ,horizontal scaler initial receiving number0
15:0	R/W	0	hsc_ini_phase0 : //unsigned , default = 0 ,horizontal scaler top field initial phase0

Table 10-855 VPP_SC_MISC 0x1D19

Bit(s)	R/W	Default	Description
22	R/W	0	hsc_len_div2_en : //unsigned , default = 0 ,if true, divide VSC line length 2 as the HSC input length, otherwise VSC length length is the same as the VSC line length just for special usage, more flexibility
21	R/W	0	lbuf_mode : //unsigned , default = 0 ,if true, prevsc uses lin buffer, otherwise prevsc does not use line buffer, it should be same as prevsc_en
20	R/W	0	prehsc_en : //unsigned , default = 0 ,prehsc_en
19	R/W	0	prevsc_en : //unsigned , default = 0 ,prevsc_en
18	R/W	0	vsc_en : //unsigned , default = 0 ,vsc_en
17	R/W	0	hsc_en : //unsigned , default = 0 ,hsc_en
16	R/W	0	sc_top_en : //unsigned , default = 0 ,scale_top_en
15	R/W	0	sc_vd_en : //unsigned , default = 0 ,video1 scale out enable
12	R/W	1	hsc_nonlinear_4region_en : //unsigned , default = 1 ,if true, region0,region4 are nonlinear regions, otherwise they are not scaling regions, for horizontal scaler
10:8	R/W	0	hsc_bank_length : //unsigned , default = 0 ,horizontal scaler bank length
5	R/W	4	vsc_phase_field_mode : //unsigned , default = 4 ,vertical scaler phase field mode, if true, disable the opposite parity line output, more bandwith needed if output 1080i
4	R/W	0	vsc_nonlinear_4region_en : //unsigned , default = 0 ,if true, region0,region4 are nonlinear regions, otherwise they are not scaling regions, for vertical scaler
2:0	R/W	4	vsc_bank_length : //unsigned , default = 4 ,vertical scaler bank length

Table 10-856 DI_HSC_INI_PAT_CTRL 0x376b

Bit(s)	R/W	Default	Description
31:24	R/W	0	prehsc_pattern : //unsigned , default = 0, prehsc pattern, each pattern 1 bit, from lsb -> msb
22:20	R/W	0	prehsc_pat_star : //unsigned , default = 0, prehsc pattern start

Amlogic Proprietary and Confidential
Copyright © Amlogic. All rights reserved.

Bit(s)	R/W	Default	Description
18:16	R/W	0	prehsc_pat_end : //unsigned , default = 0, prehsc pattern end
15:8	R/W	0	hsc_pattern : //unsigned , default = 0, hsc pattern, each pattern 1 bit, from lsb -> msb
6:4	R/W	0	hsc_pat_start : //unsigned , default = 0, hsc pattern start
2:0	R/W	0	hsc_pat_end : //unsigned , default = 0, hsc pattern end

Table 10-857 DI_SC_GCLK_CTRL 0x376c

Bit(s)	R/W	Default	Description
15:0	R/W	0	vpp_sc_gclk_ctrl : //unsigned , default = 0,

Table 10-858 DI_SC_HOLD_LINE 0x376d

Bit(s)	R/W	Default	Description
31:0	R/W	0	sc_hold_line : //unsigned , default = 0,

Table 10-859 DI_HDR_IN_HSIZE 0x376e

Bit(s)	R/W	Default	Description
12:0	R/W	0	hdr input h size

Table 10-860 DI_HDR_IN_VSIZE 0x376f

Bit(s)	R/W	Default	Description
12:0	R/W	0	hdr input v size

Table 10-861 DI_HDR2_CTRL 0x3770

Bit(s)	R/W	Default	Description
20:18	R/W	0	reg_din_swap : // unsigned , default = 0
17	R/W	0	reg_out_fmt : // unsigned , default = 0
16	R/W	0	reg_only_mat : // unsigned , default = 0
13	R/W	0	reg_VDIN0_HDR2_top_en : // unsigned , default = 0
12	R/W	1	reg_cgain_mode : // unsigned , default = 1
7: 6	R/W	1	reg_gmut_mode : // unsigned , default = 1
5	R/W	0	reg_in_shift : // unsigned , default = 0
4	R/W	1	reg_in_fmt : // unsigned , default = 1
3	R/W	1	reg_eo_enable : // unsigned , default = 1
2	R/W	1	reg_oe_enable : // unsigned , default = 1

Amlogic Proprietary and Confidential
Copyright © Amlogic. All rights reserved.

Bit(s)	R/W	Default	Description
1	R/W	1	reg_ogain_enable : // unsigned , default = 1
0	R/W	1	reg_cgain_enable : // unsigned , default = 1

Table 10-862 DI_HDR2_CLK_GATE 0x3771

Bit(s)	R/W	Default	Description
31:30	R/W	0	clk_tm : gate clock ctrl (main clock) // unsigned , default = 0
29:28	R/W	0	output : matrix clock gate ctrl // unsigned , default = 0
25:24	R/W	0	input : matrix clock gate ctrl // unsigned , default = 0
23:22	R/W	0	hdr : top cbus clock gate ctrl // unsigned , default = 0
21:20	R/W	0	eotf : cbus clock gate ctrl // unsigned , default = 0
19:18	R/W	0	oetf : cbus clock gate ctrl // unsigned , default = 0
17:16	R/W	0	gamma : mult cbus clock gate ctrl // unsigned , default = 0
15:14	R/W	0	adaptive : cbus scaler clock gate ctrl // unsigned , default = 0
13:12	R/W	0	cgain : cbus clock gate ctrl // unsigned , default = 0
11:10	R/W	0	eotf : clock gate ctrl // unsigned , default = 0
9:8	R/W	0	oetf : clock gate ctrl // unsigned , default = 0
7:6	R/W	0	gamma : mult clock gate ctrl // unsigned , default = 0
5:4	R/W	0	adaptive : scaler clock gate ctrl // unsigned , default = 0
3:2	R/W	0	uv : gain clock gate ctrl // unsigned , default = 0
1:0	R/W	0	cgain : clock gate ctrl // unsigned , default = 0

Table 10-863 DI_HDR2_MATRIXI_COEF00_01 0x3772

Bit(s)	R/W	Default	Description
28:16	R/W	0	coef00 : // signed , default = 0
12:0	R/W	0	coef01 : // signed , default = 0

Table 10-864 DI_HDR2_MATRIXI_COEF02_10 0x3773

Bit(s)	R/W	Default	Description
28:16	R/W	0	coef02 : // signed , default = 0
12:0	R/W	0	coef10 : // signed , default = 0

Table 10-865 DI_HDR2_MATRIXI_COEF11_12 0x3774

Bit(s)	R/W	Default	Description
28:16	R/W	0	coef11 : // signed , default = 0
12:0	R/W	0	coef12 : // signed , default = 0

Amlogic Proprietary and Confidential
Copyright © Amlogic. All rights reserved.

Table 10-866 DI_HDR2_MATRIXI_COEF20_21 0x3775

Bit(s)	R/W	Default	Description
28:16	R/W	0	coef20 : // signed , default = 0
12:0	R/W	0	coef21 : // signed , default = 0

Table 10-867 DI_HDR2_MATRIXI_COEF22 0x3776

Bit(s)	R/W	Default	Description
12:0	R/W	0	coef22 : // signed , default = 0

Table 10-868 DI_HDR2_MATRIXI_COEF30_31 0x3777

Bit(s)	R/W	Default	Description
28:16	R/W	0	coef13 : // signed , default = 0
12:0	R/W	0	coef14 : // signed , default = 0

Table 10-869 DI_HDR2_MATRIXI_COEF32_40 0x3778

Bit(s)	R/W	Default	Description
28:16	R/W	0	coef23 : // signed , default = 0
12:0	R/W	0	coef24 : // signed , default = 0

Table 10-870 DI_HDR2_MATRIXI_COEF41_42 0x3779

Bit(s)	R/W	Default	Description
28:16	R/W	0	coef15 : // signed , default = 0
12:0	R/W	0	coef25 : // signed , default = 0

Table 10-871 DI_HDR2_MATRIXI_OFFSET0_1 0x377A

Bit(s)	R/W	Default	Description
26:16	R/W	0	offset0 : // signed , default = 0
10:0	R/W	0	offset1 : // signed , default = 0

Table 10-872 DI_HDR2_MATRIXI_OFFSET2 0x377B

Bit(s)	R/W	Default	Description
10:0	R/W	0	offset2 : // signed , default = 0

Amlogic Proprietary and Confidential
Copyright © Amlogic. All rights reserved.

Table 10-873 DI_HDR2_MATRIXI_PRE_OFFSET0_1 0x377C

Bit(s)	R/W	Default	Description
26:16	R/W	0	pre_offset0 : // signed , default = 0
10:0	R/W	0	pre_offset1 : // signed , default = 0

Table 10-874 DI_HDR2_MATRIXI_PRE_OFFSET2 0x377D

Bit(s)	R/W	Default	Description
10:0	R/W	0	pre_offset2 : // signed , default = 0

Table 10-875 DI_HDR2_MATRIXO_COEF00_01 0x377E

Bit(s)	R/W	Default	Description
28:16	R/W	0	coef00 : // signed , default = 0
12:0	R/W	0	coef01 : // signed , default = 0

Table 10-876 DI_HDR2_MATRIXO_COEF02_10 0x377F

Bit(s)	R/W	Default	Description
28:16	R/W	0	coef02 : // signed , default = 0
12:0	R/W	0	coef10 : // signed , default = 0

Table 10-877 DI_HDR2_MATRIXO_COEF11_12 0x3780

Bit(s)	R/W	Default	Description
28:16	R/W	0	coef11 : // signed , default = 0
12:0	R/W	0	coef12 : // signed , default = 0

Table 10-878 DI_HDR2_MATRIXO_COEF20_21 0x3781

Bit(s)	R/W	Default	Description
28:16	R/W	0	coef20 : // signed , default = 0
12:0	R/W	0	coef21 : // signed , default = 0

Table 10-879 DI_HDR2_MATRIXO_COEF22 0x3782

Bit(s)	R/W	Default	Description
12:0	R/W	0	coef22 : // signed , default = 0

Amlogic Proprietary and Confidential
Copyright © Amlogic. All rights reserved.

Table 10-880 DI_HDR2_MATRIXO_COEF30_31 0x3783

Bit(s)	R/W	Default	Description
28:16	R/W	0	coef13 : // signed , default = 0
12:0	R/W	0	coef14 : // signed , default = 0

Table 10-881 DI_HDR2_MATRIXO_COEF32_40 0x3784

Bit(s)	R/W	Default	Description
28:16	R/W	0	coef23 : // signed , default = 0
12:0	R/W	0	coef24 : // signed , default = 0

Table 10-882 DI_HDR2_MATRIXO_COEF41_42 0x3785

Bit(s)	R/W	Default	Description
28:16	R/W	0	coef15 : // signed , default = 0
12:0	R/W	0	coef25 : // signed , default = 0

Table 10-883 DI_HDR2_MATRIXO_OFFSET0_1 0x3786

Bit(s)	R/W	Default	Description
26:16	R/W	0	offset0 : // signed , default = 0
10:0	R/W	0	offset1 : // signed , default = 0

Table 10-884 DI_HDR2_MATRIXO_OFFSET2 0x3787

Bit(s)	R/W	Default	Description
10:0	R/W	0	offset2 : // signed , default = 0

Table 10-885 DI_HDR2_MATRIXO_PRE_OFFSET0_1 0x3788

Bit(s)	R/W	Default	Description
26:16	R/W	0	pre_offset0 : // signed , default = 0
10:0	R/W	0	pre_offset1 : // signed , default = 0

Table 10-886 DI_HDR2_MATRIXO_PRE_OFFSET2 0x3789

Bit(s)	R/W	Default	Description
10:0	R/W	0	pre_offset2 : // signed , default = 0

Amlogic Proprietary and Confidential
Copyright © Amlogic. All rights reserved.

Table 10-887 DI_HDR2_MATRIXI_CLIP 0x378A

Bit(s)	R/W	Default	Description
19:8	R/W	0	comp_th : // unsigned , default = 0
7:5	R/W	0	conv_rs : // unsigned , default = 0
4:3	R/W	0	clmod : // unsigned , default = 0

Table 10-888 DI_HDR2_MATRIXO_CLIP 0x378B

Bit(s)	R/W	Default	Description
19:8	R/W	0	comp_th : // unsigned , default = 0
7:5	R/W	0	conv_rs : // unsigned , default = 0
4:3	R/W	0	clmod : // unsigned , default = 0

Table 10-889 DI_HDR2_CGAIN_OFFT 0x378C

Bit(s)	R/W	Default	Description
26:16	R/W	0	reg_cgain_oft2 : // signed , default = 0
10:0	R/W	0	reg_cgain_oft1 : // signed , default = 0

Table 10-890 DI_EOTF_LUT_ADDR_PORT 0x378E

Bit(s)	R/W	Default	Description
7:0	R/W	0	eotf_lut_addr : // unsigned , default = 0

Table 10-891 DI_EOTF_LUT_DATA_PORT 0x378F

Bit(s)	R/W	Default	Description
19:0	R/W	0	eotf_lut_data : // unsigned , default = 0

Table 10-892 DI_OETF_LUT_ADDR_PORT 0x3790

Bit(s)	R/W	Default	Description
7:0	R/W	0	oetf_lut_addr : // unsigned , default = 0

Table 10-893 DI_OETF_LUT_DATA_PORT 0x3791

Bit(s)	R/W	Default	Description
11:0	R/W	0	oetf_lut_data : // unsigned , default = 0

Amlogic Proprietary and Confidential
Copyright © Amlogic. All rights reserved.

Table 10-894 DI_CGAIN_LUT_ADDR_PORT 0x3792

Bit(s)	R/W	Default	Description
7:0	R/W	0	cgain_lut_addr : // unsigned , default = 0

Table 10-895 DI_CGAIN_LUT_DATA_PORT 0x3793

Bit(s)	R/W	Default	Description
11:0	R/W	0	cgain_lut_data : // unsigned , default = 0

Table 10-896 DI_HDR2_CGAIN_COEF0 0x3794

Bit(s)	R/W	Default	Description
27:16	R/W	0	reg_cgain_coef1 : // unsigned , default = 0
11:0	R/W	0	reg_cgain_coef0 : //unsigned , default = 0

Table 10-897 DI_HDR2_CGAIN_COEF1 0x3795

Bit(s)	R/W	Default	Description
11:0	R/W	0	reg_cgain_coef2 : // unsigned , default = 0

Table 10-898 DI_OGAIN_LUT_ADDR_PORT 0x3796

Bit(s)	R/W	Default	Description
7:0	R/W	0	ogain_lut_addr : // unsigned , default = 0

Table 10-899 DI_OGAIN_LUT_DATA_PORT 0x3797

Bit(s)	R/W	Default	Description
11:0	R/W	0	ogain_lut_data : // unsigned , default = 0

Table 10-900 DI_HDR2_ADPS_CTRL 0x3798

Bit(s)	R/W	Default	Description
6	R/W	1	reg_adpscl_bypass2 : // unsigned , default = 1
5	R/W	1	reg_adpscl_bypass1 : // unsigned , default = 1
4	R/W	1	reg_adpscl_bypass0 : // unsigned , default = 1
1:0	R/W	1	reg_adpscl_mode : // unsigned , default = 1

Amlogic Proprietary and Confidential
Copyright © Amlogic. All rights reserved.

Table 10-901 DI_HDR2_ADPS_ALPHA0 0x3799

Bit(s)	R/W	Default	Description
29:16	R/W	0x1000	reg_adpscl_alpha1 : // unsigned , default = 0x1000
13:0	R/W	0x1000	reg_adpscl_alpha0 : // unsigned , default = 0x1000

Table 10-902 DI_HDR2_ADPS_ALPHA1 0x379A

Bit(s)	R/W	Default	Description
27:24	R/W	0xc	reg_adpscl_shift0 : // unsigned , default = 0xc
23:20	R/W	0xc	reg_adpscl_shift1 : // unsigned , default = 0xc
19:16	R/W	0xc	reg_adpscl_shift2 : // unsigned , default = 0xc
13:0	R/W	0x1000	reg_adpscl_alpha2 : // unsigned , default = 0x1000

Table 10-903 DI_HDR2_ADPS_BETA0 0x379B

Bit(s)	R/W	Default	Description
20	R/W	0	reg_adpscl_beta0_s : // unsigned , default = 0
19:0	R/W	0xfc000	reg_adpscl_beta0 : // unsigned , default = 0xfc000

Table 10-904 DI_HDR2_ADPS_BETA1 0x379C

Bit(s)	R/W	Default	Description
20	R/W	0	reg_adpscl_beta1_s : // unsigned , default = 0
19:0	R/W	0xfc000	reg_adpscl_beta1 : // unsigned , default = 0xfc000

Table 10-905 DI_HDR2_ADPS_BETA2 0x379D

Bit(s)	R/W	Default	Description
20	R/W	0	reg_adpscl_beta2_s : // unsigned , default = 0
19:0	R/W	0xfc000	reg_adpscl_beta2 : // unsigned , default = 0xfc000

Table 10-906 DI_HDR2_ADPS_COEF0 0x379E

Bit(s)	R/W	Default	Description
27:16	R/W	460	reg_adpscl_ys_coef1 : // unsigned , default = 460
11:0	R/W	1188	reg_adpscl_ys_coef0 : // unsigned , default = 1188

Table 10-907 DI_HDR2_ADPS_COEF1 0x379F

Bit(s)	R/W	Default	Description
11:0	R/W	104	reg_adpscl_ys_coef2 : // unsigned , default = 104

Amlogic Proprietary and Confidential
Copyright © Amlogic. All rights reserved.

Table 10-908 DI_HDR2_GMUT_CTRL 0x37A0

Bit(s)	R/W	Default	Description
3:0	R/W	14	reg_gmut_shift : // unsigned , default = 14

Table 10-909 DI_HDR2_GMUT_COEF0 0x37A1

Bit(s)	R/W	Default	Description
31:16	R/W	674	reg_gmut_coef01 : // unsigned , default = 674
15:0	R/W	1285	reg_gmut_coef00 : // unsigned , default = 1285

Table 10-910 DI_HDR2_GMUT_COEF1 0x37A2

Bit(s)	R/W	Default	Description
31:16	R/W	142	reg_gmut_coef10 : // unsigned , default = 142
15:0	R/W	89	reg_gmut_coef02 : // unsigned , default = 89

Table 10-911 DI_HDR2_GMUT_COEF2 0x37A3

Bit(s)	R/W	Default	Description
31:16	R/W	23	reg_gmut_coef12 : // unsigned , default = 23
15:0	R/W	1883	reg_gmut_coef11 : // unsigned , default = 1883

Table 10-912 DI_HDR2_GMUT_COEF3 0x37A4

Bit(s)	R/W	Default	Description
31:16	R/W	180	reg_gmut_coef21 : // unsigned , default = 180
15:0	R/W	34	reg_gmut_coef20 : // unsigned , default = 34

Table 10-913 DI_HDR2_GMUT_COEF4 0x37A5

Bit(s)	R/W	Default	Description
15:0	R/W	1834	reg_gmut_coef22 : // unsigned , default = 1834

Table 10-914 DI_HDR2_PIPE_CTRL1 0x37A6

Bit(s)	R/W	Default	Description
31:24	R/W	4	vblank_num_oetf : // unsigned , default = 4
23:16	R/W	4	hblank_num_oetf : // unsigned , default = 4
15:8	R/W	10	vblank_num_eotf : // unsigned , default = 10
7:0	R/W	10	hblank_num_eotf : // unsigned , default = 10

Amlogic Proprietary and Confidential
Copyright © Amlogic. All rights reserved.

Table 10-915 DI_HDR2_PIPE_CTRL2 0x37A7

Bit(s)	R/W	Default	Description
31:24	R/W	10	vblank_num_cgain : // unsigned , default = 10
23:16	R/W	10	hblank_num_cgain : // unsigned , default = 10
15:8	R/W	11	vblank_num_gmut : // unsigned , default = 11
7:0	R/W	11	hblank_num_gmut : // unsigned , default = 11

Table 10-916 DI_HDR2_PIPE_CTRL3 0x37A8

Bit(s)	R/W	Default	Description
31:24	R/W	22	vblank_num_adps : // unsigned , default = 22
23:16	R/W	2	hblank_num_adps : // unsigned , default = 2
15:8	R/W	4	vblank_num_uv : // unsigned , default = 4
7:0	R/W	4	hblank_num_uv : // unsigned , default = 4

Table 10-917 DI_HDR2_PROC_WIN1 0x37A9

Bit(s)	R/W	Default	Description
28:16	R/W	0	proc_win_h_ed : // unsigned , default = 0
12:0	R/W	0	proc_win_h_st : // unsigned , default = 0

Table 10-918 DI_HDR2_PROC_WIN2 0x37AA

Bit(s)	R/W	Default	Description
31	R/W	0	proc_win_gmut_en : // unsigned , default = 0
30	R/W	0	proc_win_adps_en : // unsigned , default = 0
29	R/W	0	proc_win_cgain_en : // unsigned , default = 0
28:16	R/W	0	proc_win_v_ed : // unsigned , default = 0
12:0	R/W	0	proc_win_v_st : // unsigned , default = 0

Table 10-919 DI_HDR2_MATRIXI_EN_CTRL 0x37AB

Bit(s)	R/W	Default	Description
5:4	R/W	0	matrix_gclk_ctrl : // unsigned , default = 0
1	R/W	0	enable_sync_sel : // unsigned , default = 0
0	R/W	0	matrix_conv_en : // unsigned , default = 0

Amlogic Proprietary and Confidential
Copyright © Amlogic. All rights reserved.

Table 10-920 DI_HDR2_MATRIXO_EN_CTRL 0x37AC

Bit(s)	R/W	Default	Description
5:4	R/W	0	matrix_gclk_ctrl : // unsigned , default = 0
1	R/W	0	enable_sync_sel : // unsigned , default = 0
0	R/W	0	matrix_conv_en : // unsigned , default = 0

10.2.3.12 NR_SCALE Registers

Register Address

- NRDSWR_X 0xff00dfe4
- NRDSWR_Y 0xff00dfe8
- NRDSWR_CTRL 0xff00dfec
- NRDSWR_CAN_SIZE 0xff00dff0
- NR_DS_BUF_SIZE 0xff00dd00
- NR_DS_CTRL 0xff00dd04
- NR_DS_OFFSET 0xff00dd08
- NR_DS_BLD_COEF 0xff00dd0c

Register Description

Table 10-921 NRDSWR_X 0x37f9

Bit(s)	R/W	Default	Description
31:30	R/W	2	burst_len : unsigned , default = 2
29	R/W	0	rev_x : unsigned , default = 0
28:16	R/W	0	start_x : unsigned , default = 0
12:0	R/W	2	end_x : unsigned , default = 2cf

Table 10-922 NRDSWR_Y 0x37fa

Bit(s)	R/W	Default	Description
31:30	R/W	0	canvas_id : unsigned , default = 0
29	R/W	0	rev_y : unsigned , default = 0
28:16	R/W	0	start_y : unsigned , default = 0
12:0	R/W	0	end_y : unsigned , default = 0x1df

Table 10-923 NRDSWR_CTRL 0x37fb

Bit(s)	R/W	Default	Description
31:16	R/W	0	urgent_ctrl : unsigned , default = 0
15	R/W	0	force_wvalid : unsigned , default = 0
14	R/W	0	canvas_syncen : unsigned , default = 0

Amlogic Proprietary and Confidential
Copyright © Amlogic. All rights reserved.

Bit(s)	R/W	Default	Description
13	R/W	1	canvas_wr : unsigned , default = 1
12	R/W	0	req_en : unsigned , default = 0
10	R/W	0	clr_wrrsp : unsigned , default = 0
8	R/W	0	urgent : unsigned , default = 0
7:0	R/W	0	canvas_index : unsigned , default = 0

Table 10-924 NRDSWR_CAN_SIZE 0x37fc

Bit(s)	R/W	Default	Description
30:29	R/W	0	reg_rst : unsigned , default = 0
28:16	R/W	0	hsizem1 : unsigned , default = 0x2cf
14	R/W	0	reg_reset : unsigned , default = 0
13	R/W	0	little_endian : unsigned , default = 0
12:0	R/W	0	vsizem1 : unsigned , default = 0x1df

Table 10-925 NR_DS_BUF_SIZE 0x3740

Bit(s)	R/W	Default	Description
31:24	R.O	96	dsbuf_rowmax : // unsigned , default = 96
23:16	R/W	128	dsbuf_colmax : // unsigned , default = 128
15: 8	R.O	128	dsbuf_orow : // unsigned , default = 128
7: 0	R/W	128	dsbuf_ocol : // unsigned , default = 128

Table 10-926 NR_DS_CTRL 0x3741

Bit(s)	R/W	Default	Description
30	R/W	0	Nr_ds_enable
29:24	R/W	8	reg_h_step : // unsigned , default = 8 rand lut0
21:16	R/W	8	reg_v_step : // unsigned , default = 8 rand lut0
14:12	R/W	4	reg_haa_sel : // unsigned , default = 4
10: 8	R/W	4	reg_vaa_sel : // unsigned , default = 4
6: 4	R/W	1	reg_use_hphase : // unsigned , default = 1
0	R/W	0	reg_yuv_bldmode : // unsigned , default = 0

Table 10-927 NR_DS_OFFSET 0x3742

Bit(s)	R/W	Default	Description
25:16	R/W	0	reg_h_ofst : // signed , default = 0
9: 0	R/W	0	reg_v_ofst : // signed , default = 0

Amlogic Proprietary and Confidential
Copyright © Amlogic. All rights reserved.

Table 10-928 NR_DS_BLD_COEF 0x3743

Bit(s)	R/W	Default	Description
23:16	R/W	128	reg_yuv_bldcoef2 : // unsigned , default = 128
15: 8	R/W	64	reg_yuv_bldcoef1 : // unsigned , default = 64
7: 0	R/W	64	reg_yuv_bldcoef0 : // unsigned , default = 64

10.2.3.13 MCDI Registers

Register Address

- MCDI_HV_SIZEIN 0xff00bc00
- MCDI_HV_BLKSIZEIN 0xff00bc04
- MCDI_BLKTOTAL 0xff00bc08
- MCDI_MOTINEN 0xff00bc0c
- MCDI_CTRL_MODE 0xff00bc10
- MCDI_UNI_MVDST 0xff00bc14
- MCDI_BI_MVDST 0xff00bc18
- MCDI_SAD_GAIN 0xff00bc1c
- MCDI_TXT_THD 0xff00bc20
- MCDI_FLT_MODESEL 0xff00bc24
- MCDI_CHK_EDGE_THD 0xff00bc28
- MCDI_CHK_EDGE_GAIN_OFFST 0xff00bc2c
- MCDI_LMV_RT 0xff00bc30
- MCDI_LMV_GAINTHD 0xff00bc34
- MCDI_RPTMV_THD0 0xff00bc38
- MCDI_RPTMV_THD1 0xff00bc3c
- MCDI_RPTMV_THD2 0xff00bc40
- MCDI_RPTMV_SAD 0xff00bc44
- MCDI_RPTMV_FLG 0xff00bc48
- MCDI_RPTMV_GAIN 0xff00bc4c
- MCDI_GMV_RT 0xff00bc50
- MCDI_GMV_GAIN 0xff00bc54
- MCDI_HOR_SADOFST 0xff00bc58
- MCDI_REF_MV_NUM 0xff00bc5c
- MCDI_REF_BADW_THD_GAIN 0xff00bc60
- MCDI_REF_BADW_SUM_GAIN 0xff00bc64
- MCDI_REF_BS_THD_GAIN 0xff00bc68
- MCDI_REF_ERR_GAIN0 0xff00bc6c
- MCDI_REF_ERR_GAIN1 0xff00bc70
- MCDI_REF_ERR_FRQ_CHK 0xff00bc74
- MCDI_QME_LPF_MSK 0xff00bc78

Amlogic Proprietary and Confidential
Copyright © Amlogic. All rights reserved.

- MCDI_REL_DIF_THD_02 0xff00bc7c
- MCDI_REL_DIF_THD_34 0xff00bc80
- MCDI_REL_BADW_GAIN_OFFST_01 0xff00bc84
- MCDI_REL_BADW_GAIN_OFFST_23 0xff00bc88
- MCDI_REL_BADW_THD_GAIN_OFFST 0xff00bc8c
- MCDI_REL_BADW_THD_MIN_MAX 0xff00bc90
- MCDI_REL_SAD_GAIN_OFFST_01 0xff00bc94
- MCDI_REL_SAD_GAIN_OFFST_23 0xff00bc98
- MCDI_REL_SAD_THD_GAIN_OFFST 0xff00bc9c
- MCDI_REL_SAD_THD_MIN_MAX 0xff00bca0
- MCDI_REL_DET_GAIN_00 0xff00bca4
- MCDI_REL_DET_GAIN_01 0xff00bca8
- MCDI_REL_DET_GAIN_10 0xff00bcac
- MCDI_REL_DET_GAIN_11 0xff00bcb0
- MCDI_REL_DET_GAIN_20 0xff00bcb4
- MCDI_REL_DET_GAIN_21 0xff00bcb8
- MCDI_REL_DET_GMV_DIF_CHK 0xff00bcbc
- MCDI_REL_DET_LMV_DIF_CHK 0xff00bcc0
- MCDI_REL_DET_FRQ_CHK 0xff00bcc4
- MCDI_REL_DET_PD22_CHK 0xff00bcc8
- MCDI_REL_DET_RPT_CHK_ROW 0xff00bccc
- MCDI_REL_DET_RPT_CHK_GAIN_QMV 0xff00bcd0
- MCDI_REL_DET_RPT_CHK_THD_0 0xff00bcd4
- MCDI_REL_DET_RPT_CHK_THD_1 0xff00bcd8
- MCDI_REL_DET_LPF_DIF_THD 0xff00bcdc
- MCDI_REL_DET_LPF_MSK_00_03 0xff00bce0
- MCDI_REL_DET_LPF_MSK_04_12 0xff00bce4
- MCDI_REL_DET_LPF_MSK_13_21 0xff00bce8
- MCDI_REL_DET_LPF_MSK_22_30 0xff00bcec
- MCDI_REL_DET_LPF_MSK_31_34 0xff00bcf0
- MCDI_REL_DET_MIN 0xff00bcf4
- MCDI_REL_DET_LUT_0_3 0xff00bcf8
- MCDI_REL_DET_LUT_4_7 0xff00bcfc
- MCDI_REL_DET_LUT_8_11 0xff00bd00
- MCDI_REL_DET_LUT_12_15 0xff00bd04
- MCDI_REL_DET_COL_CFD_THD 0xff00bd08
- MCDI_REL_DET_COL_CFD_AVG_LUMA 0xff00bd0c
- MCDI_REL_DET_BAD_THD_0 0xff00bd10
- MCDI_REL_DET_BAD_THD_1 0xff00bd14
- MCDI_PD22_CHK_THD 0xff00bd18
- MCDI_PD22_CHK_GAIN_OFFST_0 0xff00bd1c
- MCDI_PD22_CHK_GAIN_OFFST_1 0xff00bd20
- MCDI_LMV_LOCK_CNT_THD_GAIN 0xff00bd24
- MCDI_LMV_LOCK_ABS_DIF_THD 0xff00bd28

Amlogic Proprietary and Confidential
Copyright © Amlogic. All rights reserved.

- MCDI_LMV_LOCK_ROW 0xff00bd2c
- MCDI_LMV_LOCK_RT_MODE 0xff00bd30
- MCDI_GMV_LOCK_CNT_THD_GAIN 0xff00bd34
- MCDI_GMV_LOCK_ABS_DIF_THD 0xff00bd38
- MCDI_HIGH_VERT_FRQ_DIF_THD 0xff00bd3c
- MCDI_HIGH_VERT_FRQ_DIF_DIF_THD 0xff00bd40
- MCDI_HIGH_VERT_FRQ_RT_GAIN 0xff00bd44
- MCDI_MOTION_PARADOX_THD 0xff00bd48
- MCDI_MOTION_PARADOX_RT 0xff00bd4c
- MCDI_MOTION_REF_THD 0xff00bd50
- MCDI_REL_COL_REF_RT 0xff00bd54
- MCDI_PD22_CHK_THD_RT 0xff00bd58
- MCDI_CHAR_DET_DIF_THD 0xff00bd5c
- MCDI_CHAR_DET_CNT_THD 0xff00bd60
- MCDI_PD_22_CHK_WND0_X 0xff00bd64
- MCDI_PD_22_CHK_WND0_Y 0xff00bd68
- MCDI_PD_22_CHK_WND1_X 0xff00bd6c
- MCDI_PD_22_CHK_WND1_Y 0xff00bd70
- MCDI_PD_22_CHK_FRC_LMV 0xff00bd74
- MCDI_PD_22_CHK_FLG_CNT 0xff00bd78
- MCDI_RO_FLD_PD_22_PRE_CNT1 0xff00bf28
- MCDI_RO_FLD_PD_22_FOR_CNT1 0xff00bf2c
- MCDI_RO_FLD_PD_22_FLT_CNT1 0xff00bf30
- MCDI_RO_FLD_PD_22_PRE_CNT2 0xff00bf34
- MCDI_RO_FLD_PD_22_FOR_CNT2 0xff00bf38
- MCDI_RO_FLD_PD_22_FLT_CNT2 0xff00bf3c
- MCDI_FIELD_MV 0xff00bd80
- MCDI_FIELD_HVF_PRDX_CNT 0xff00bd84
- MCDI_FIELD_LUMA_AVG_SUM_0 0xff00bd88
- MCDI_FIELD_LUMA_AVG_SUM_1 0xff00bd8c
- MCDI_YCBCR_BLEND_CRTL 0xff00bd90
- MCDI_MCVECWR_CANVAS_SIZE 0xff00bd94
- MCDI_MCVECRD_CANVAS_SIZE 0xff00bd98
- MCDI_MCINFOWR_CANVAS_SIZE 0xff00bd9c
- MCDI_MCINFORD_CANVAS_SIZE 0xff00bda0
- MCDI_MCVECWR_X 0xff00be48
- MCDI_MCVECWR_Y 0xff00be4c
- MCDI_MCVECWR_CTRL 0xff00be50
- MCDI_MCVECRD_X 0xff00be54
- MCDI_MCVECRD_Y 0xff00be58
- MCDI_MCVECRD_CTRL 0xff00be5c
- MCDI_MCINFOWR_X 0xff00be60
- MCDI_MCINFOWR_Y 0xff00be64
- MCDI_MCINFOWR_CTRL 0xff00be68

Amlogic Proprietary and Confidential
Copyright © Amlogic. All rights reserved.

- MCDI_MCINFORD_X 0xff00be6c
- MCDI_MCINFORD_Y 0xff00be70
- MCDI_MCINFORD_CTRL 0xff00be74
- MCDI_LMVLCKSTEXT_0 0xff00bda4
- MCDI_LMVLCKSTEXT_1 0xff00bda8
- MCDI_LMVLCKEDEXT_0 0xff00bdac
- MCDI_LMVLCKEDEXT_1 0xff00bdb0
- MCDI_MC_CRTL 0xff00bdc0
- MCDI_MC_LPF_MSK_0 0xff00bdc4
- MCDI_MC_LPF_MSK_1 0xff00bdc8
- MCDI_MC_LPF_MSK_2 0xff00bdcc
- MCDI_MC_LPF_MSK_3 0xff00bdd0
- MCDI_MC_LPF_MSK_4 0xff00bdd4
- MCDI_MC_REL_GAIN_OFFST_0 0xff00bdd8
- MCDI_MC_REL_GAIN_OFFST_1 0xff00bddc
- MCDI_MC_COL_CFD_0 0xff00bde0
- MCDI_MC_COL_CFD_1 0xff00bde4
- MCDI_MC_COL_CFD_2 0xff00bde8
- MCDI_MC_COL_CFD_3 0xff00bdec
- MCDI_MC_COL_CFD_4 0xff00bdf0
- MCDI_MC_COL_CFD_5 0xff00bdf4
- MCDI_MC_COL_CFD_6 0xff00bdf8
- MCDI_MC_COL_CFD_7 0xff00bdfc
- MCDI_MC_COL_CFD_8 0xff00be00
- MCDI_MC_COL_CFD_9 0xff00be04
- MCDI_MC_COL_CFD_10 0xff00be08
- MCDI_MC_COL_CFD_11 0xff00be0c
- MCDI_MC_COL_CFD_12 0xff00be10
- MCDI_MC_COL_CFD_13 0xff00be14
- MCDI_MC_COL_CFD_14 0xff00be18
- MCDI_MC_COL_CFD_15 0xff00be1c
- MCDI_MC_COL_CFD_16 0xff00be20
- MCDI_MC_COL_CFD_17 0xff00be24
- MCDI_MC_COL_CFD_18 0xff00be28
- MCDI_MC_COL_CFD_19 0xff00be2c
- MCDI_MC_COL_CFD_20 0xff00be30
- MCDI_MC_COL_CFD_21 0xff00be34
- MCDI_MC_COL_CFD_22 0xff00be38
- MCDI_MC_COL_CFD_23 0xff00be3c
- MCDI_MC_COL_CFD_24 0xff00be40
- MCDI_MC_COL_CFD_25 0xff00be44
- MCDI_RO_FLD_LUMA_AVG_SUM 0xff00be80
- MCDI_RO_GMV_VLD_CNT 0xff00be84
- MCDI_RO_RPT_FLG_CNT 0xff00be88

Amlogic Proprietary and Confidential
Copyright © Amlogic. All rights reserved.

- MCDI_RO_FLD_BAD_SAD_CNT 0xff00be8c
- MCDI_RO_FLD_BAD_BADW_CNT 0xff00be90
- MCDI_RO_FLD_BAD_REL_CNT 0xff00be94
- MCDI_RO_FLD_MTN_CNT 0xff00be98
- MCDI_RO_FLD_VLD_CNT 0xff00be9c
- MCDI_RO_FLD_PD_22_PRE_CNT 0xff00bea0
- MCDI_RO_FLD_PD_22_FOR_CNT 0xff00bea4
- MCDI_RO_FLD_PD_22_FLT_CNT 0xff00bea8
- MCDI_RO_HIGH_VERT_FRQ_FLG 0xff00beac
- MCDI_RO_GMV_LOCK_FLG 0xff00beb0
- MCDI_RO_RPT_MV 0xff00beb4
- MCDI_RO_MOTION_PARADOX_FLG 0xff00beb8
- MCDI_RO_PD_22_FLG 0xff00bebc
- MCDI_RO_COL_CFD_0 0xff00bec0
- MCDI_RO_COL_CFD_1 0xff00bec4
- MCDI_RO_COL_CFD_2 0xff00bec8
- MCDI_RO_COL_CFD_3 0xff00becc
- MCDI_RO_COL_CFD_4 0xff00bed0
- MCDI_RO_COL_CFD_5 0xff00bed4
- MCDI_RO_COL_CFD_6 0xff00bed8
- MCDI_RO_COL_CFD_7 0xff00bedc
- MCDI_RO_COL_CFD_8 0xff00bee0
- MCDI_RO_COL_CFD_9 0xff00bee4
- MCDI_RO_COL_CFD_10 0xff00bee8
- MCDI_RO_COL_CFD_11 0xff00beec
- MCDI_RO_COL_CFD_12 0xff00bef0
- MCDI_RO_COL_CFD_13 0xff00bef4
- MCDI_RO_COL_CFD_14 0xff00bef8
- MCDI_RO_COL_CFD_15 0xff00befc
- MCDI_RO_COL_CFD_16 0xff00bf00
- MCDI_RO_COL_CFD_17 0xff00bf04
- MCDI_RO_COL_CFD_18 0xff00bf08
- MCDI_RO_COL_CFD_19 0xff00bf0c
- MCDI_RO_COL_CFD_20 0xff00bf10
- MCDI_RO_COL_CFD_21 0xff00bf14
- MCDI_RO_COL_CFD_22 0xff00bf18
- MCDI_RO_COL_CFD_23 0xff00bf1c
- MCDI_RO_COL_CFD_24 0xff00bf20
- MCDI_RO_COL_CFD_25 0xff00bf24
- MCDI_RO_FLD_PD_22_PRE_CNT1 0xff00bf28
- MCDI_RO_FLD_PD_22_FOR_CNT1 0xff00bf2c
- MCDI_RO_FLD_PD_22_FLT_CNT1 0xff00bf30
- MCDI_RO_FLD_PD_22_PRE_CNT2 0xff00bf34
- MCDI_RO_FLD_PD_22_FOR_CNT2 0xff00bf38

Amlogic Proprietary and Confidential
Copyright © Amlogic. All rights reserved.

- MCDI_RO_FLD_PD_22_FLT_CNT2 0xff00bf3c

Register Description

Table 10-929 MCDI_HV_SIZEIN 0x2f00

Bit(s)	R/W	Default	Description
31-29	R/W		reserved
28-16	R/W	1024	reg_mcdi_hsize image horizontal size (number of cols) default=1024
15-13	R/W		reserved
12-0	R/W	1024	reg_mcdi_vsize image vertical size (number of rows) default=1024

Table 10-930 MCDI_HV_BLKSIZEIN 0x2f01

Bit(s)	R/W	Default	Description
31	R/W	0	reg_mcdi_vrev default = 0
30	R/W	0	reg_mcdi_hrev default = 0
29-28	R/W		reserved
27-16	R/W	1024	reg_mcdi_blkhsize image horizontal blk size (number of cols) default=1024
15-13	R/W		reserved
11-0	R/W	1024	reg_mcdi_blkvsize image vertical blk size (number of rows) default=1024

Table 10-931 MCDI_BLKTOTAL 0x2f02

Bit(s)	R/W	Default	Description
31-24	R/W		reserved
23-0	R/W	0	reg_mcdi_blktotal

Table 10-932 MCDI_MOTINEN 0x2f03

Bit(s)	R/W	Default	Description
31-2	R/W		reserved
1	R/W	1	reg_mcdi_motionrefen. enable motion refinement of MA, default = 1
0	R/W	1	reg_mcdi_motionparadoxen. enable motion paradox detection, default = 1

Table 10-933 MCDI_CTRL_MODE 0x2f04

Bit(s)	R/W	Default	Description
31-29	R/W		reserved
28	R/W	0	mc info read enable
27-26	R/W	2	reg_mcdi_lmvlocken 0:disable, 1: use max Lmv, 2: use no-zero Lmv, lmv lock enable mode, default = 2
25	R/W	1	reg_mcdi_reldetrptchken 0-unable; 1: enableenable repeat pattern check (not repeat mv detection) in rel det part, default = 1

Amlogic Proprietary and Confidential
Copyright © Amlogic. All rights reserved.

Bit(s)	R/W	Default	Description
24	R/W	1	reg_mcdi_reldetgmvpd22chken 0-unable; 1: enable enable pull-down 22 mode check in gmv lock mode for rel det, default = 1
23	R/W	1	reg_mcdi_pd22chken 0-unable; 1: enable enable pull-down 22 mode check (lock) function, default = 1
22	R/W	1	reg_mcdi_reldetlpfen 0-unable; 1: enable enable det value lpf, default = 1
21	R/W	1	reg_mcdi_reldetlmvpd22chken 0-unable; 1: enable enable pull-down 22 mode check in lmv lock mode for rel det, default = 1
20	R/W	1	reg_mcdi_reldetlmvdifchken 0-unable; 1: enable enable lmv dif check in lmv lock mode for rel det, default = 1
19	R/W	1	reg_mcdi_reldetgmvdifchken 0-unable; 1: enable enable lmv dif check in lmv lock mode for rel det, default = 1
18	R/W	1	reg_mcdi_reldetpd22chken 0-unable; 1: enable enable pull-down 22 mode check for rel det refinement, default = 1
17	R/W	1	reg_mcdi_reldetfrqchken 0-unable; 1: enable enable mv frequency check in rel det, default = 1
16	R/W		reg_mcdi_qmeen 0-unable; 1: enable enable quarter motion estimation, defautl = 1
15	R/W	1	reg_mcdi_refrptmven 0-unable; 1: enable use repeat mv in refinement, default = 1
14	R/W	1	reg_mcdi_refgmven 0-unable; 1: enable use gmv in refinement, default = 1
13	R/W	1	reg_mcdi_reflmven 0-unable; 1: enable use lmvs in refinement, default = 1
12	R/W	1	reg_mcdi_refnmven 0-unable; 1: enable use neighoring mvs in refinement, default = 1
11	R/W		reserved
10	R/W	1	reg_mcdi_referrfrqchken 0-unable; 1: enable enable mv frquency check while finding min err in ref, default = 1
9	R/W	1	reg_mcdi_refen 0-unable; 1: enable enable mv refinement, default = 1
8	R/W	1	reg_mcdi_horlineen 0-unable; 1: enable enable horizontal lines detection by sad map, default = 1
7	R/W	1	reg_mcdi_highvertfrqdeten 0-unable; 1: enable enable high vertical frequency pattern detection, default = 1
6	R/W	1	reg_mcdi_gmvlocken 0-unable; 1: enable enable gmv lock mode, default = 1
5	R/W	1	reg_mcdi_rptmven 0-unable; 1: enable enable repeat pattern detection, default = 1
4	R/W	1	reg_mcdi_gmven 0-unable; 1: enable enable global motion estimation, default = 1
3	R/W	1	reg_mcdi_lmven0-unable; 1: enable enable line mv estimation for hme, default = 1
2	R/W	1	reg_mcdi_chkedgeen0-unable; 1: enable enable check edge function, default = 1
1	R/W	1	reg_mcdi_txtdeten 0-unable; 1: enable enable texture detection, default = 1

Amlogic Proprietary and Confidential
Copyright © Amlogic. All rights reserved.

Table 10-934 MCDI_UNI_MVDST 0x2f05

Bit(s)	R/W	Default	Description
31-20	R/W		reserved
19-17	R/W	1	reg_mcdi_unimvdstabsseg0 segment0 for uni-mv abs, default = 1
16-12	R/W	15	reg_mcdi_unimvdstabsseg1 segment1 for uni-mv abs, default = 15
11-8	R/W	2	reg_mcdi_unimvdstabsdifgain0 2/2, gain0 of uni-mv abs dif for segment0, normalized 2 to '1', default = 2
7-5	R/W	2	reg_mcdi_unimvdstabsdifgain1 2/2, gain1 of uni-mv abs dif for segment1, normalized 2 to '1', default = 2
4-2	R/W	2	reg_mcdi_unimvdstabsdifgain2 2/2, gain2 of uni-mv abs dif beyond segment1, normalized 2 to '1', default = 2
1-0	R/W	0	reg_mcdi_unimvdstsgnshft shift for neighboring distance of uni-mv, default = 0

Table 10-935 MCDI_BI_MVDST 0x2f06

Bit(s)	R/W	Default	Description
31-20	R/W		reserved
19-17	R/W	1	reg_mcdi_bimvdstabsseg0 segment0 for bi-mv abs, default = 1
16-12	R/W	9	reg_mcdi_bimvdstabsseg1 segment1 for bi-mv abs, default = 9
11-8	R/W	6	reg_mcdi_bimvdstabsdifgain0 6/2, gain0 of bi-mv abs dif for segment0, normalized 2 to '1', default = 6
7-5	R/W	3	reg_mcdi_bimvdstabsdifgain1 3/2, gain1 of bi-mvabs dif for segment1, normalized 2 to '1', default = 3
4-2	R/W	2	reg_mcdi_bimvdstabsdifgain2 2/2, gain2 of bi-mvabs dif beyond segment1, normalized 2 to '1', default = 2
1-0	R/W	0	reg_mcdi_bimvdstsgnshft shift for neighboring distance of bi-mv, default = 0

Table 10-936 MCDI_SAD_GAIN 0x2f07

Bit(s)	R/W	Default	Description
31-19	R/W		reserved
18-17	R/W	3	reg_mcdi_unisadcorepxlgain uni-sad core pixels gain, default = 3
16	R/W	0	reg_mcdi_unisadcorepxlnormen enable uni-sad core pixels normalization, default = 0
15-11	R/W		reserved
10-9	R/W	3	reg_mcdi_bisadcorepxlgain bi-sad core pixels gain, default = 3
8	R/W	1	reg_mcdi_bisadcorepxlnormen enable bi-sad core pixels normalization, default = 1
7-3	R/W		reserved
2-1	R/W	3	reg_mcdi_biqsadcorepxlgain bi-qsad core pixels gain, default = 3
0	R/W	1	reg_mcdi_biqsadcorepxlnormen enable bi-qsad core pixels normalization, default = 1

Amlogic Proprietary and Confidential
Copyright © Amlogic. All rights reserved.

Table 10-937 MCDI_TXT_THD 0x2f08

Bit(s)	R/W	Default	Description
31-24	R/W		reserved
23-16	R/W	24	reg_mcdi_txtminmaxdifthd, min max dif threshold (>=) for texture detection, default = 24
15-8	R/W	9	reg_mcdi_txtmeandifthd, mean dif threshold (<) for texture detection, default = 9
7-3	R/W		reserved
2-0	R/W	2	reg_mcdi_txtdetthd, texture detecting threshold, 0~4, default = 2

Table 10-938 MCDI_FLT_MODESEL 0x2f09

Bit(s)	R/W	Default	Description
31	R/W		reserved
30-28	R/W	1	reg_mcdi_flthorlineselmode mode for horizontal line detecting flat calculation, default = 1, same as below
27	R/W		reserved
26-24	R/W	4	reg_mcdi_fltgmvselmode mode for gmv flat calculation, default = 4, same as below
23	R/W		reserved
22-20	R/W	2	reg_mcdi_fltsadselmode mode for sad flat calculation, default = 2, same as below
19	R/W		reserved
18-16	R/W	3	reg_mcdi_fltbadwselmode mode for badw flat calculation, default = 3, same as below
15	R/W		reserved
14-12	R/W	4	reg_mcdi_fltrptmvselmode mode for repeat mv flat calculation, default = 4, same as below
11	R/W		reserved
10-8	R/W	4	reg_mcdi_fltbadrelselmode mode for bad rel flat calculation, default = 4, same as below
7	R/W		reserved
6-4	R/W	2	reg_mcdi_fltcolcfdselmode mode for col cfd flat calculation, default = 2, same as below
3	R/W		reserved
2-0	R/W	2	reg_mcdi_fltpd22chkselmode mode for pd22 check flat calculation, default = 2, 0:cur dif h, 1: cur dif v, 2: pre dif h, 3: pre dif v, 4: cur flt, 5: pre flt, 6: cur+pre, 7: max all(cur,pre)

Table 10-939 MCDI_CHK_EDGE_THD 0x2f0a

Bit(s)	R/W	Default	Description
23-28	R/W		reserved.
27-24	R/W	1	reg_mcdi_chkedgedifsadthd. thd (<=) for sad dif check, 0~8, default = 1
23-16	R/W		reserved.

Amlogic Proprietary and Confidential
Copyright © Amlogic. All rights reserved.

Bit(s)	R/W	Default	Description
15-12	R/W	15	reg_mcdi_chkedgemaxedgethd. max drt of edge, default = 15
11-8	R/W	2	reg_mcdi_chkedgeminedgethd. min drt of edge, default = 2
7	R/W		reserved.
6-0	R/W	14	reg_mcdi_chkedgevdifthd. thd for vertical dif in check edge, default = 14

Table 10-940 MCDI_CHK_EDGE_GAIN_OFFST 0x2f0b

Bit(s)	R/W	Default	Description
31-24	R/W		reserved.
23-20	R/W	4	reg_mcdi_chkedgedifthd1. thd1 for edge dif check (<=), default = 4
19-16	R/W	15	reg_mcdi_chkedgedifthd0. thd0 for edge dif check (>=), default = 15
-15	R/W		reserved.
14-10	R/W	24	reg_mcdi_chkedgechklen. total check length for edge check, 1~24 (>0), default = 24
9-8	R/W	1	reg_mcdi_chkedgeedgesel. final edge select mode, 0: original start edge, 1: lpf start edge, 2: orignal start+end edge, 3: lpf start+end edge, default = 1
7-3	R/W	4	reg_mcdi_chkedgesaddstgain. distance gain for sad calc while getting edges, default = 4
2	R/W		reg_mcdi_chkedgechkmode. edge used in check mode, 0- original edge, 1: lpf edge, defautl = 1
1	R/W		reg_mcdi_chkedgestartedge. edge mode for start edge, 0- original edge, 1: lpf edge, defautl = 0
0	R/W	0	reg_mcdi_chkedgeedgelpf. edge lpf mode, 0-[0,2,4,2,0], 1:[1,2,2,2,1], default = 0

Table 10-941 MCDI_LMV_RT 0x2f0c

Bit(s)	R/W	Default	Description
31-24	R/W	32	Reg_mcdi_lmv_vx_gain
14-12	R/W		reg_mcdi_lmvvalidmode valid mode for lmv calc., 100b: use char det, 010b: use flt, 001b: use hori flg
11-10	R/W	1	reg_mcdi_lmvgainmvmode four modes of mv selection for lmv weight caluclua-tion, default = 1
// // lst(x-1	R/W		x,x+1); 1- cur(x-4,x-3), lst(x,x+1); 2: cur(x-5,x-4,x-3), lst(x-1,x,x+1,x+2,x+3); 3: cur(x-6,x-5,x-4,x-3), lst(x-1,x,x+1,x+2);
9	R/W	0	reg_mcdi_lmvinitmode initial lmvs at first row of input field, 0- intial value = 0; 1: inital = 32 (invalid), default = 0
8	R/W		reserved
7-4	R/W	5	reg_mcdi_lmvrt0 ratio of max mv, default = 5
3-0	R/W	5	reg_mcdi_lmvrt1 ratio of second max mv, default = 5

Amlogic Proprietary and Confidential
Copyright © Amlogic. All rights reserved.

Table 10-942 MCDI_LMV_GAINTHD 0x2f0d

Bit(s)	R/W	Default	Description
31-24	R/W	96	reg_mcdi_lmvvxmaxgain max gain of lmv weight, default = 96
23	R/W		reserved
22-20	R/W	1	reg_mcdi_lmvdifthd0 dif threshold 0 (<) for small lmv, default = 1
19-17	R/W	2	reg_mcdi_lmvdifthd1 dif threshold 1 (<) for median lmv, default = 2
16-14	R/W	3	reg_mcdi_lmvdifthd2 dif threshold 2 (<) for large lmv, default = 3
13-8	R/W	20	reg_mcdi_lmvnumlmt least/limit number of (total number - max0), default = 20
7-0	R/W	9	reg_mcdi_lmvfltthd flt cnt thd (<) for lmv, default = 9

Table 10-943 MCDI_RPTMV_THD0 0x2f0e

Bit(s)	R/W	Default	Description
31-25	R/W	64	reg_mcdi_rptmvslpthd2 slope thd (>=) between i and i+3/i-3 (i+4/i-4), default = 64
24-20	R/W	4	reg_mcdi_rptmvslpthd1 slope thd (>=) between i and i+2/i-2, default = 4
19-10	R/W	300	reg_mcdi_rptmvampthd2 amplitude thd (>=) between max and min, when count cycles, default = 300
9-0	R/W	400	reg_mcdi_rptmvampthd1 amplitude thd (>=) between average of max and min, default = 400

Table 10-944 MCDI_RPTMV_THD1 0x2f0f

Bit(s)	R/W	Default	Description
31-28	R/W		reserved
27-25	R/W	2	reg_mcdi_rptmvcyccntthd thd (>=) of total cycles count, default = 2
24-21	R/W	3	reg_mcdi_rptmvcycdifthd dif thd (<) of cycles length, default = 3
20-18	R/W	1	reg_mcdi_rptmvcycvldthd thd (>) of valid cycles number, default = 1
17-15	R/W	2	reg_mcdi_rptmvhalfcycminthd min length thd (>=) of half cycle, default = 2
14-11	R/W	5	reg_mcdi_rptmvhalfcycdifthd neighboring half cycle length dif thd (<), default = 5
10-8	R/W	2	reg_mcdi_rptmvminmaxcntthd least number of valid max and min, default = 2
7-5	R/W	2	reg_mcdi_rptmvcycminthd min length thd (>=) of cycles, default = 2
4-0	R/W	17	reg_mcdi_rptmvcycmaxthd max length thd (<) of cycles, default = 17

Table 10-945 MCDI_RPTMV_THD2 0x2f10

Bit(s)	R/W	Default	Description
31-24	R/W		reserved
23-16	R/W	8	reg_mcdi_rptmvhdifthd0 higher hdif thd (>=) (vertical edge) for rpt detection, default = 8

Amlogic Proprietary and Confidential
Copyright © Amlogic. All rights reserved.

Bit(s)	R/W	Default	Description
15-8	R/W	4	reg_mcdi_rptmvhdifthd1 hdif thd (>=) (slope edge) for rpt detection, default = 4
7-0	R/W	1	reg_mcdi_rptmvvdifthd vdif thd (>=) (slope edge) for rpt detection, default = 1

Table 10-946 MCDI_RPTMV_SAD 0x2f11

Bit(s)	R/W	Default	Description
31-26	R/W		reserved
25-16	R/W	336	reg_mcdi_rptmvsaddifthdgain 7x3x(16/16), gain for sad dif thd in rpt mv detection, 0~672, normalized 16 as '1', default = 336
15-10	R/W		reserved
9-0	R/W	16	reg_mcdi_rptmvsaddifthdoffst offset for sad dif thd in rpt mv detection, -512~511, default = 16

Table 10-947 MCDI_RPTMV_FLG 0x2f12

Bit(s)	R/W	Default	Description
31-18	R/W		reserved
17-16	R/W	2	reg_mcdi_rptmvmode select mode of mvs for repeat motion estimation, 0: hmv, 1: qmv/2, 2 or 3: qmv/4, default = 2
15-8	R/W	64	reg_mcdi_rptmvflgcntthd thd (>=) of min count number for rptmv of whole field, for rptmv estimation, default = 64
7-5	R/W		reserved
4-0	R/W		reg_mcdi_rptmvflgcntrt 4/32, ratio for repeat mv flag count, normalized 32 as '1', set 31 to 32,

Table 10-948 MCDI_RPTMV_GAIN 0x2f13

Bit(s)	R/W	Default	Description
31-24	R/W	96	reg_mcdi_rptmvlftgain up repeat mv gain for hme, default = 96
23-16	R/W	32	reg_mcdi_rptmvuplftgain up left repeat mv gain for hme, default = 32
15-8	R/W	64	reg_mcdi_rptmvupgain up repeat mv gain for hme, default = 64
7-0	R/W	32	reg_mcdi_rptmvuprightgain up right repeat mv gain for hme, default = 32

Table 10-949 MCDI_GMV_RT 0x2f14

Bit(s)	R/W	Default	Description
31	R/W		reserved
30-24	R/W	32	reg_mcdi_gmvmtnrt0 ratio 0 for motion senario, set 127 to 128, normalized 128 as '1', default =32
23	R/W		reserved
22-16	R/W	56	reg_mcdi_gmvmtnrt1 ratio 1 for motion senario, set 127 to 128, normalized 128 as '1', default = 56

Amlogic Proprietary and Confidential
Copyright © Amlogic. All rights reserved.

Bit(s)	R/W	Default	Description
15	R/W		reserved
14-8	R/W	56	reg_mcdi_gmvstlrt0 ratio 0 for still senario, set 127 to 128, normalized 128 as '1', default = 56
7	R/W		reserved
6-0	R/W	80	reg_mcdi_gmvstlrt1 ratio 1 for still senario, set 127 to 128, normalized 128 as '1', default = 80

Table 10-950 MCDI_GMV_GAIN 0x2f15

Bit(s)	R/W	Default	Description
31-25	R/W	100	reg_mcdi_gmvzeromvlockrt0 ratio 0 for locking zero mv, set 127 to 128, normalized 128 as '1', default = 100
24-18	R/W	112	reg_mcdi_gmvzeromvlockrt1 ratio 1 for locking zero mv, set 127 to 128, normalized 128 as '1', default = 112
17-16	R/W	3	reg_mcdi_gmvvalidmode valid mode for gmv calc., 10b: use flt, 01b: use hori flg, default = 3
15-8	R/W	0	reg_mcdi_gmvvxgain gmv's vx gain when gmv locked for hme, default = 0
7-0	R/W	3	reg_mcdi_gmvfltthd flat thd (<) for gmv calc. default = 3

Table 10-951 MCDI_HOR_SADOFST 0x2f16

Bit(s)	R/W	Default	Description
31-25	R/W		reserved
24-16	R/W	21	reg_mcdi_horsaddifthdgain 21*1/8, gain/divisor for sad dif threshold in hor line detection, normalized 8 as '1', default = 21
15-8	R/W	0	reg_mcdi_horsaddifthdoffst offset for sad dif threshold in hor line detection, -128~127, default = 0
7-0	R/W	24	reg_mcdi_horvdifthd threshold (>=) of vertical dif of next block for horizontal line detection, default = 24

Table 10-952 MCDI_REF_MV_NUM 0x2f17

Bit(s)	R/W	Default	Description
31-2	R/W		reserved
1-0	R/W	0	reg_mcdi_refmcmode. motion compensated mode used in refinement, 0: pre, 1: next, 2: (pre+next)/2, default = 0

Table 10-953 MCDI_REF_BADW_THD_GAIN 0x2f18

Bit(s)	R/W	Default	Description
31-28	R/W		reserved
27-24	R/W	6	reg_mcdi_refbadwcnt2gain. gain for badwv count num==3, default = 6
23-20	R/W	3	reg_mcdi_refbadwcnt1gain. gain for badwv count num==2, default = 3
19-16	R/W	1	reg_mcdi_refbadwcnt0gain. gain for badwv count num==1, default = 1

Amlogic Proprietary and Confidential
Copyright © Amlogic. All rights reserved.

Bit(s)	R/W	Default	Description
15-12	R/W	4	reg_mcdi_refbadwthd3. threshold 3 for detect badweave with largest average luma, default = 4
11-8	R/W	3	reg_mcdi_refbadwthd2. threshold 2 for detect badweave with third smallest average luma, default = 3
7-4	R/W	2	reg_mcdi_refbadwthd1. threshold 1 for detect badweave with second smallest average luma, default = 2
3-0	R/W	1	reg_mcdi_refbadwthd0. threshold 0 for detect badweave with smallest average luma, default = 1

Table 10-954 MCDI_REF_BADW_SUM_GAIN 0x2f19

Bit(s)	R/W	Default	Description
31-13	R/W		reserved
12-8	R/W	8	reg_mcdi_refbadwsumgain0. sum gain for r channel, 0~16, default = 8
7-5	R/W		reserved
4	R/W	0	reg_mcdi_refbadwcalcmode. mode for badw calculation, 0-sum, 1:max, default = 0
3-0	R/W		reserved

Table 10-955 MCDI_REF_BS_THD_GAIN 0x2f1a

Bit(s)	R/W	Default	Description
31-28	R/W	2	reg_mcdi_refbsudgain1. up & down block stregth gain1, normalized to 8 as '1', default = 2
27-24	R/W	4	reg_mcdi_refbsudgain0. up & down block stregth gain0, normalized to 8 as '1', default = 4
23-19	R/W		reserved
18-16	R/W	0	reg_mcdi_refbslftgain. left block strength gain, default = 0
15-13	R/W		reserved
12-8	R/W	16	reg_mcdi_refbsthd1. threshold 1 for detect block stregth in refinment, default = 16
7-5	R/W		reserved
4-0	R/W	8	reg_mcdi_refbsthd0. threshold 0 for detect block stregth in refinment, default = 8

Table 10-956 MCDI_REF_ERR_GAIN0 0x2f1b

Bit(s)	R/W	Default	Description
31	R/W		reserved
30-24	R/W	48	reg_mcdi_referrnbrdstgain. neighoring mv distances gain for err calc. in ref, normalized to 8 as '1', default = 48
23-20	R/W		reserved
19-16	R/W	4	reg_mcdi_referrbsgain. bs gain for err calc. in ref, normalized to 8 as '1', default = 4

Amlogic Proprietary and Confidential
Copyright © Amlogic. All rights reserved.

Bit(s)	R/W	Default	Description
15	R/W		reserved
14-8	R/W	64	reg_mcdi_referrbadwgain. badw gain for err calc. in ref, normalized to 8 as '1', default = 64
7-4	R/W		reserved
3-0	R/W	4	reg_mcdi_referrsadgain. sad gain for err calc. in ref, normalized to 8 as '1', default = 4

Table 10-957 MCDI_REF_ERR_GAIN1 0x2f1c

Bit(s)	R/W	Default	Description
31-20	R/W		reserved
19-16	R/W	4	reg_mcdi_referrchkedgegain. check edge gain for err calc. in ref, normalized to 8 as '1', default = 4
15-12	R/W		reserved
11-8	R/W	0	reg_mcdi_referrlmvgain. (locked) lmv gain for err calc. in ref, normalized to 8 as '1', default = 0
7-4	R/W		reserved
3-0	R/W	0	reg_mcdi_referrgmvgain. (locked) gmv gain for err calc. in ref, normalized to 8 as '1', default = 0

Table 10-958 MCDI_REF_ERR_FRQ_CHK 0x2f1d

Bit(s)	R/W	Default	Description
31-28	R/W		reserved
27-24	R/W	10	reg_mcdi_referrfrqgain. gain for mv frquency, normalized to 4 as '1', default = 10
23-21	R/W		reserved
20-16	R/W	31	reg_mcdi_referrfrqmax. max gain for mv frquency check, default = 31
15	R/W		reserved
14-12	R/W	3	reg_mcdi_ref_errfrqmvdifthd2. mv dif threshold 2 (<) for mv frquency check, default = 3
11	R/W		reserved
10-8	R/W	2	reg_mcdi_ref_errfrqmvdifthd1. mv dif threshold 1 (<) for mv frquency check, default = 2
7	R/W		reserved
6-4	R/W	1	reg_mcdi_ref_errfrqmvdifthd0. mv dif threshold 0 (<) for mv frquency check, default = 1
3-0	R/W		reserved

Amlogic Proprietary and Confidential
Copyright © Amlogic. All rights reserved.

Table 10-959 MCDI_QME_LPF_MSK 0x2f1e

Bit(s)	R/W	Default	Description
31-28	R/W		reserved
27-24	R/W	7	reg_mcdi_qmechkedgelpfmsk0. lpf mask0 for chk edge in qme, 0~8, msk1 = (8-msk0), normalized to 8 as '1', default = 7
23-20	R/W		reserved
19-16	R/W	7	reg_mcdi_qmebslpfmsk0. lpf mask0 for bs in qme, 0~8, msk1 = (8-msk0), normalized to 8 as '1', default = 7
15-12	R/W		reserved
11-8	R/W	7	reg_mcdi_qmebadwlpfmsk0. lpf mask0 for badw in qme, 0~8, msk1 = (8-msk0), normalized to 8 as '1', default = 7
7-4	R/W		reserved
3-0	R/W	7	reg_mcdi_qmesadlpfmsk0. lpf mask0 for sad in qme, 0~8, msk1 = (8-msk0), normalized to 8 as '1', default = 7

Table 10-960 MCDI_REL_DIF_THD_02 0x2f1f

Bit(s)	R/W	Default	Description
31-24	R/W		reserved.
23-16	R/W	9	reg_mcdi_reldifthd2. thd (<) for (hdif+vdif), default = 9
15-8	R/W	5	reg_mcdi_reldifthd1. thd (<) for (vdif), default = 5
7-0	R/W	48	reg_mcdi_reldifthd0. thd (>=) for (hdif-vdif), default = 48

Table 10-961 MCDI_REL_DIF_THD_34 0x2f20

Bit(s)	R/W	Default	Description
31-16	R/W		reserved.
15-8	R/W	255	reg_mcdi_reldifthd4. thd (<) for (hdif), default = 255
7-0	R/W	48	reg_mcdi_reldifthd3. thd (>=) for (vdif-hdif), default = 48

Table 10-962 MCDI_REL_BADW_GAIN_OFFST_01 0x2f21

Bit(s)	R/W	Default	Description
31-24	R/W	0	reg_mcdi_relbadwoffst1. offset for badw adj, for flat block, -128~127, default = 0
23-16	R/W	128	reg_mcdi_relbadwgain1. gain for badw adj, for flat block, default = 128
15-8	R/W	0	reg_mcdi_relbadwoffst0. offset for badw adj, for vertical block, -128~127, default = 0
7-0	R/W	160	reg_mcdi_relbadwgain0. gain for badw adj, for vertical block, default = 160

Amlogic Proprietary and Confidential
Copyright © Amlogic. All rights reserved.

Table 10-963 MCDI_REL_BADW_GAIN_OFFST_23 0x2f22

Bit(s)	R/W	Default	Description
31-24	R/W	0	reg_mcdi_relbadwoffst3. offset for badw adj, for other block, -128~127, default = 0
23-16	R/W	48	reg_mcdi_relbadwgain3. gain for badw adj, for other block, default = 48
15-8	R/W	0	reg_mcdi_relbadwoffst2. offset for badw adj, for horizontal block, -128~127, default = 0
7-0	R/W	48	reg_mcdi_relbadwgain2. gain for badw adj, for horizontal block, default = 48

Table 10-964 MCDI_REL_BADW_THD_GAIN_OFFST 0x2f23

Bit(s)	R/W	Default	Description
31-23	R/W		reserved.
22-16	R/W	0	reg_mcdi_relbadwoffst. offset for badw thd adj, -64~63, default = 0
15-8	R/W		reserved.
7-0	R/W	16	reg_mcdi_relbadwthdgain. gain0 for badw thd adj, normalized to 16 as '1', default = 16

Table 10-965 MCDI_REL_BADW_THD_MIN_MAX 0x2f24

Bit(s)	R/W	Default	Description
31-18	R/W		reserved.
17-8	R/W	256	reg_mcdi_relbadwthdmax. max for badw thd adj, default = 256
7-0	R/W	16	reg_mcdi_relbadwthdmin. min for badw thd adj, default = 16

Table 10-966 MCDI_REL_SAD_GAIN_OFFST_01 0x2f25

Bit(s)	R/W	Default	Description
31-24	R/W	0	reg_mcdi_relsadoffst1. offset for sad adj, for flat block, -128~127, default = 0
23-20	R/W		reserved.
19-16	R/W	8	reg_mcdi_relsadgain1. gain for sad adj, for flat block, normalized to 8 as '1', default = 8
15-8	R/W	0	reg_mcdi_relsadoffst0. offset for sad adj, for vertical block, -128~127, default = 0
7-4	R/W		reserved.
3-0	R/W	6	reg_mcdi_relsadgain0. gain for sad adj, for vertical block, normalized to 8 as '1', default = 6

Table 10-967 MCDI_REL_SAD_GAIN_OFFST_23 0x2f26

Bit(s)	R/W	Default	Description
31-24	R/W	0	reg_mcdi_relsadoffst3. offset for sad adj, for other block, -128~127, default = 0
23-20	R/W		reserved.

Amlogic Proprietary and Confidential
Copyright © Amlogic. All rights reserved.

Bit(s)	R/W	Default	Description
19-16	R/W	8	reg_mcdi_relsadgain3. gain for sad adj, for other block, normalized to 8 as '1', default = 8
15-8	R/W	0	reg_mcdi_relsadoffst2. offset for sad adj, for horizontal block, -128~127, default = 0
7-4	R/W		reserved.
3-0	R/W	12	reg_mcdi_relsadgain2. gain for sad adj, for horizontal block, normalized to 8 as '1', default = 12

Table 10-968 MCDI_REL_SAD_THD_GAIN_OFFST 0x2f27

Bit(s)	R/W	Default	Description
31-24	R/W		reserved.
23-16	R/W	0	reg_mcdi_relsadoffst. offset for sad thd adj, -128~127, default = 0
15-10	R/W		reserved.
9-0	R/W	42	reg_mcdi_relsadthdgain. gain for sad thd adj, 21*2/16, normalized to 16 as '1', default = 42

Table 10-969 MCDI_REL_SAD_THD_MIN_MAX 0x2f28

Bit(s)	R/W	Default	Description
31-27	R/W		reserved.
26-16	R/W	672	reg_mcdi_relsadthdmax. max for sad thd adj, 21*32, default = 672
15-9	R/W		reserved.
8-0	R/W	42	reg_mcdi_relsadthdmin. min for sad thd adj, 21*2, default = 42

Table 10-970 MCDI_REL_DET_GAIN_00 0x2f29

Bit(s)	R/W	Default	Description
31-21	R/W		reserved.
20-16	R/W	8	reg_mcdi_reldetbsgain0. gain0 (gmv locked) for bs, for det. calc. normalized to 16 as '1', default = 8
15-14	R/W		reserved.
13-8	R/W	12	reg_mcdi_reldetbadwgain0. gain0 (gmv locked) for badw, for det. calc. normalized to 16 as '1', default = 12
7-5	R/W		reserved.
4-0	R/W	8	reg_mcdi_reldetsadgain0. gain0 (gmv locked) for qsad, for det. calc. normalized to 16 as '1', default = 8

Amlogic Proprietary and Confidential
Copyright © Amlogic. All rights reserved.

Table 10-971 MCDI_REL_DET_GAIN_01 0x2f2a

Bit(s)	R/W	Default	Description
31-14	R/W		reserved.
12-8	R/W	2	reg_mcdi_reldetchkedgegain0. gain0 (gmv locked) for chk_edge, for det. calc. normalized to 16 as '1', default = 2
7	R/W		reserved.
6-0	R/W	24	reg_mcdi_reldetnbrdstgain0. gain0 (gmv locked) for neighoring dist, for det. calc. normalized to 16 as '1', default = 24

Table 10-972 MCDI_REL_DET_GAIN_10 0x2f2b

Bit(s)	R/W	Default	Description
31-21	R/W		reserved.
20-16	R/W	0	reg_mcdi_reldetbsgain1. gain1 (lmv locked) for bs, for det. calc. normalized to 16 as '1', default = 0
15-14	R/W		reserved.
13-8	R/W	8	reg_mcdi_reldetbadwgain1. gain1 (lmv locked) for badw, for det. calc. normalized to 16 as '1', default = 8
7-5	R/W		reserved.
4-0	R/W	8	reg_mcdi_reldetsadgain1. gain1 (lmv locked) for qsad, for det. calc. normalized to 16 as '1', default = 8

Table 10-973 MCDI_REL_DET_GAIN_11 0x2f2c

Bit(s)	R/W	Default	Description
31-14	R/W		reserved.
12-8	R/W	0	reg_mcdi_reldetchkedgegain1. gain1 (lmv locked) for chk_edge, for det. calc. normalized to 16 as '1', default = 0
7	R/W		reserved.
6-0	R/W	24	reg_mcdi_reldetnbrdstgain1. gain1 (lmv locked) for neighoring dist, for det. calc. normalized to 16 as '1', default = 24

Table 10-974 MCDI_REL_DET_GAIN_20 0x2f2d

Bit(s)	R/W	Default	Description
31-21	R/W		reserved.
20-16	R/W	12	reg_mcdi_reldetbsgain2. gain2 (no locked) for bs, for det. calc. normalized to 16 as '1', default = 12
15-14	R/W		reserved.
13-8	R/W	32	reg_mcdi_reldetbadwgain2. gain2 (no locked) for badw, for det. calc. normalized to 16 as '1', default = 32
7-5	R/W		reserved.
4-0	R/W	16	reg_mcdi_reldetsadgain2. gain2 (no locked) for qsad, for det. calc. normalized to 16 as '1', default = 16

Amlogic Proprietary and Confidential
Copyright © Amlogic. All rights reserved.

Table 10-975 MCDI_REL_DET_GAIN_21 0x2f2e

Bit(s)	R/W	Default	Description
31-26	R/W		reserved
25-16	R/W	0	reg_mcdi_reldetoffst. offset for rel calculation, for det. calc. -512~511, default = 0
15-14	R/W		reserved.
12-8	R/W	10	reg_mcdi_reldetchkedgegain2. gain2 (no locked) for chk_edge, for det. calc. normalized to 16 as '1', default = 10
7	R/W		reserved.
6-0	R/W	32	reg_mcdi_reldetnbrdstgain2. gain2 (no locked) for neighoring dist, for det. calc. normalized to 16 as '1', default = 32

Table 10-976 MCDI_REL_DET_GMV_DIF_CHK 0x2f2f

Bit(s)	R/W	Default	Description
31-24	R/W		reserved.
23-16	R/W	0	reg_mcdi_reldetgmvfltthd. flat thd (>=) for gmv lock decision, default = 0
15	R/W		reserved.
14-12	R/W	3	reg_mcdi_reldetgmvdifthd. dif thd (>=) for current mv different from gmv for gmv dif check, actually used in Lmv lock check, default = 3
11	R/W		reserved.
10-8	R/W	1	reg_mcdi_reldetgmvdifmin. min mv dif for gmv dif check, default = 1, note: dif between reg_mcdi_rel_det_gmv_dif_max and reg_mcdi_rel_det_gmv_dif_min should be; 0,1,3,7, not work for others
7-4	R/W	4	reg_mcdi_reldetgmvdifmax. max mv dif for gmv dif check, default = 4
3-1	R/W		reserved
0	R/W	0	reg_mcdi_reldetgmvdifmvmode. mv mode used for gmv dif check, 0- use refmv, 1: use qmv, default = 0

Table 10-977 MCDI_REL_DET_LMV_DIF_CHK 0x2f30

Bit(s)	R/W	Default	Description
31-24	R/W		reserved.
23-16	R/W	12	reg_mcdi_reldetlmvfltthd. flat thd (>=) for lmv lock decision, default = 12
15-14	R/W		reserved.
13-12	R/W	1	reg_mcdi_reldetlmvlockchkmode. lmv lock check mode, 0:cur Lmv, 1: cur & (last | next), 2: last & cur & next Lmv, default = 1
11	R/W		reserved.
10-8	R/W	1	reg_mcdi_reldetlmvdifmin. min mv dif for lmv dif check, default = 1, note: dif between reg_mcdi_rel_det_lmv_dif_max and reg_mcdi_rel_det_lmv_dif_min should be; 0,1,3,7, not work for others
7-4	R/W	4	reg_mcdi_reldetlmvdifmax. max mv dif for lmv dif check, default = 4

Amlogic Proprietary and Confidential
Copyright © Amlogic. All rights reserved.

Bit(s)	R/W	Default	Description
3-1	R/W		reserved
0	R/W	0	reg_mcdi_reldetlmvdifmvmode. mv mode used for lmv dif check, 0- use refmv, 1: use qmv, default = 0

Table 10-978 MCDI_REL_DET_FRQ_CHK 0x2f31

Bit(s)	R/W	Default	Description
31-12	R/W		reserved.
11-8	R/W	10	reg_mcdi_reldetfrqgain. gain for frequency check, normalized to 4 as '1', default = 10
7-5	R/W		reserved
4-0	R/W	31	reg_mcdi_reldetfrqmax. max value for frequency check, default = 31

Table 10-979 MCDI_REL_DET_PD22_CHK 0x2f32

Bit(s)	R/W	Default	Description
31-18	R/W		reserved.
30-21	R/W	512	reg_mcdi_reldetpd22chkoffst1. offset for pd22 check happened, default = 512
20-16	R/W	12	reg_mcdi_reldetpd22chkgain1. gain for pd22 check happened, normalized to 8 as '1', default = 12
14-5	R/W	512	reg_mcdi_reldetpd22chkoffst0. offset for pd22 check happened, default = 512
4-0	R/W	12	reg_mcdi_reldetpd22chkgain0. gain for pd22 check happened, normalized to 8 as '1', default = 12

Table 10-980 MCDI_REL_DET_RPT_CHK_ROW 0x2f33

Bit(s)	R/W	Default	Description
31-27	R/W		reserved
26-16	R/W	2047	reg_mcdi_reldetrptchkendrow. end row (<) number for repeat check, default = 2047
15-11	R/W		reserved
10-0	R/W	0	reg_mcdi_reldetrptchkstartrow. start row (>=) number for repeat check, default = 0

Table 10-981 MCDI_REL_DET_RPT_CHK_GAIN_QMV 0x2f34

Bit(s)	R/W	Default	Description
31-30	R/W		reserved
29-24	R/W	15	reg_mcdi_reldetrptchkqmvmax. max thd (<) of abs qmv for repeat check, default = 15, note that quarter mv's range is -63~63
23-22	R/W		reserved
21-16	R/W	10	reg_mcdi_reldetrptchkqmvmin. min thd (>=) of abs qmv for repeat check, default = 10, note that quarter mv's range is -63~63

Amlogic Proprietary and Confidential
Copyright © Amlogic. All rights reserved.

Bit(s)	R/W	Default	Description
15	R/W		reserved/
14-4	R/W	512	reg_mcdi_reldetrptchkoffst. offset for repeat check, default = 512
3-0	R/W	4	reg_mcdi_reldetrptchkgain. gain for repeat check, normalized to 8 as '1', default = 4

Table 10-982 MCDI_REL_DET_RPT_CHK_THD_0 0x2f35

Bit(s)	R/W	Default	Description
31-24	R/W		reserved
23-16	R/W	255	reg_mcdi_reldetrptchkzerosadthd. zero sad thd (<) for repeat check, default = 255
15-14	R/W		reserved.
13-8	R/W	16	reg_mcdi_reldetrptchkzerobadwthd. zero badw thd (>=) for repeat check, default = 16
7-4	R/W		reserved
3-0	R/W	5	reg_mcdi_reldetrptchkfrqdifthd. frequency dif thd (<) for repeat check, 0~10, default = 5

Table 10-983 MCDI_REL_DET_RPT_CHK_THD_1 0x2f36

Bit(s)	R/W	Default	Description
31-16	R/W		reserved
15-8	R/W	16	reg_mcdi_reldetrptchkvdifthd. vertical dif thd (<) for repeat check, default = 16
7-0	R/W	16	reg_mcdi_reldetrptchkhdifthd. horizontal dif thd (>=) for repeat check, default = 16

Table 10-984 MCDI_REL_DET_LPF_DIF_THD 0x2f37

Bit(s)	R/W	Default	Description
31-24	R/W	9	reg_mcdi_reldetlpfdifthd3. hdif thd (<) for lpf selection of horizontal block, default = 9
23-16	R/W	48	reg_mcdi_reldetlpfdifthd2. vdif-hdif thd (>=) for lpf selection of horizontal block, default = 48
15-8	R/W	9	reg_mcdi_reldetlpfdifthd1. vdif thd (<) for lpf selection of vertical block, default = 9
7-0	R/W	48	reg_mcdi_reldetlpfdifthd0. hdif-vdif thd (>=) for lpf selection of vertical block, default = 48

Table 10-985 MCDI_REL_DET_LPF_MSK_00_03 0x2f38

Bit(s)	R/W	Default	Description
31-29	R/W		reserved
28-24	R/W	1	reg_mcdi_reldetlpfmsk03. det lpf mask03 for gmv/lmv locked mode, 0~16, default = 1

Amlogic Proprietary and Confidential
Copyright © Amlogic. All rights reserved.

Bit(s)	R/W	Default	Description
23-21	R/W		reserved
20-16	R/W	1	reg_mcdi_reldetlpfmsk02. det lpf mask02 for gmv/lmv locked mode, 0~16, default = 1
15-13	R/W		reserved
12-8	R/W	5	reg_mcdi_reldetlpfmsk01. det lpf mask01 for gmv/lmv locked mode, 0~16, default = 5
7-5	R/W		reserved
4-0	R/W	8	reg_mcdi_reldetlpfmsk00. det lpf mask00 for gmv/lmv locked mode, 0~16, default = 8

Table 10-986 MCDI_REL_DET_LPF_MSK_04_12 0x2f39

Bit(s)	R/W	Default	Description
31-29	R/W		reserved
28-24	R/W	0	reg_mcdi_reldetlpfmsk12. det lpf mask12 for vertical blocks, 0~16, default = 0
23-21	R/W		reserved
20-16	R/W	0	reg_mcdi_reldetlpfmsk11. det lpf mask11 for vertical blocks, 0~16, default = 0
15-13	R/W		reserved
12-8	R/W	16	reg_mcdi_reldetlpfmsk10. det lpf mask10 for vertical blocks, 0~16, default = 16
7-5	R/W		reserved
4-0	R/W	1	reg_mcdi_reldetlpfmsk04. det lpf mask04 for gmv/lmv locked mode, 0~16, default = 1

Table 10-987 MCDI_REL_DET_LPF_MSK_13_21 0x2f3a

Bit(s)	R/W	Default	Description
31-29	R/W		reserved
28-24	R/W	6	reg_mcdi_reldetlpfmsk21. det lpf mask21 for horizontal blocks, 0~16, default = 6
23-21	R/W		reserved
20-16	R/W	8	reg_mcdi_reldetlpfmsk20. det lpf mask20 for horizontal blocks, 0~16, default = 8
15-13	R/W		reserved
12-8	R/W	0	reg_mcdi_reldetlpfmsk14. det lpf mask14 for vertical blocks, 0~16, default = 0
7-5	R/W		reserved
4-0	R/W	0	reg_mcdi_reldetlpfmsk13. det lpf mask13 for vertical blocks, 0~16, default = 0

Table 10-988 MCDI_REL_DET_LPF_MSK_22_30 0x2f3b

Bit(s)	R/W	Default	Description
31-29	R/W		reserved
28-24	R/W	16	reg_mcdi_reldetlpfmsk30. det lpf mask30 for other blocks, 0~16, default = 16

Amlogic Proprietary and Confidential
Copyright © Amlogic. All rights reserved.

Bit(s)	R/W	Default	Description
23-21	R/W		reserved
20-16	R/W	1	reg_mcdi_reldetlpfmsk24. det lpf mask24 for horizontal blocks, 0~16, default = 1
15-13	R/W		reserved
12-8	R/W	0	reg_mcdi_reldetlpfmsk23. det lpf mask23 for horizontal blocks, 0~16, default = 0
7-5	R/W		reserved
4-0	R/W	1	reg_mcdi_reldetlpfmsk22. det lpf mask22 for horizontal blocks, 0~16, default = 1

Table 10-989 MCDI_REL_DET_LPF_MSK_31_34 0x2f3c

Bit(s)	R/W	Default	Description
31-29	R/W		reserved
28-24	R/W	0	reg_mcdi_reldetlpfmsk34. det lpf mask34 for other blocks, 0~16, default = 0
23-21	R/W		reserved
20-16	R/W	0	reg_mcdi_reldetlpfmsk33. det lpf mask33 for other blocks, 0~16, default = 0
15-13	R/W		reserved
12-8	R/W	0	reg_mcdi_reldetlpfmsk32. det lpf mask32 for other blocks, 0~16, default = 0
7-5	R/W		reserved
4-0	R/W	0	reg_mcdi_reldetlpfmsk31. det lpf mask31 for other blocks, 0~16, default = 0

Table 10-990 MCDI_REL_DET_MIN 0x2f3d

Bit(s)	R/W	Default	Description
31-7	R/W		reserved
6-0	R/W	16	reg_mcdi_reldetmin. min of detected value, default = 16

Table 10-991 MCDI_REL_DET_LUT_0_3 0x2f3e

Bit(s)	R/W	Default	Description
31-24	R/W	8	reg_mcdi_reldetmaplut3. default = 8
23-16	R/W	4	reg_mcdi_reldetmaplut2. default = 4
15-8	R/W	2	reg_mcdi_reldetmaplut1. default = 2
7-0	R/W	0	reg_mcdi_reldetmaplut0. default = 0

Table 10-992 MCDI_REL_DET_LUT_4_7 0x2f3f

Bit(s)	R/W	Default	Description
31-24	R/W	64	reg_mcdi_reldetmaplut7. default = 64
23-16	R/W	48	reg_mcdi_reldetmaplut6. default = 48

Amlogic Proprietary and Confidential
Copyright © Amlogic. All rights reserved.

Bit(s)	R/W	Default	Description
15-8	R/W	32	reg_mcdi_reldetmaplut5. default = 32
7-0	R/W	16	reg_mcdi_reldetmaplut4. default = 16

Table 10-993 MCDI_REL_DET_LUT_8_11 0x2f40

Bit(s)	R/W	Default	Description
31-24	R/W	160	reg_mcdi_reldetmaplut11. default = 160
23-16	R/W	128	reg_mcdi_reldetmaplut10. default = 128
15-8	R/W	96	reg_mcdi_reldetmaplut9. default = 96
7-0	R/W	80	reg_mcdi_reldetmaplut8. default = 80

Table 10-994 MCDI_REL_DET_LUT_12_15 0x2f41

Bit(s)	R/W	Default	Description
31-24	R/W	255	reg_mcdi_reldetmaplut15. default = 255
23-16	R/W	240	reg_mcdi_reldetmaplut14. default = 240
15-8	R/W	224	reg_mcdi_reldetmaplut13. default = 224
7-0	R/W	192	reg_mcdi_reldetmaplut12. default = 192

Table 10-995 MCDI_REL_DET_COL_CFD_THD 0x2f42

Bit(s)	R/W	Default	Description
31-24	R/W	5	reg_mcdi_reldetcolcfdfltthd. thd for flat smaller than (<) of column cofidence, default = 5
23-16	R/W	160	reg_mcdi_reldetcolcfdthd1. thd for rel larger than (>=) in rel calc. mode col confidence without gmv locking, default = 160
15-8	R/W	100	reg_mcdi_reldetcolcfdthd0. thd for rel larger than (>=) in rel calc. mode col confidence when gmv locked, default = 100
7-2	R/W	16	reg_mcdi_reldetcolcfdbadwthd. thd for badw larger than (>=) in qbadw calc. mode of column cofidence, default = 16
1	R/W		reserved
0	R/W	0	reg_mcdi_reldetcolcfdcalcmode. calc. mode for column cofidence, 0- use rel, 1: use qbadw, default = 0

Table 10-996 MCDI_REL_DET_COL_CFD_AVG_LUMA 0x2f43

Bit(s)	R/W	Default	Description
31-24	R/W	235	reg_mcdi_reldetcolcfdavgmin1. avg luma min1 (>=) for column cofidence, valid between 16~235, default = 235
23-16	R/W	235	reg_mcdi_reldetcolcfdavgmax1. avg luma max1 (<) for column cofidence, valid between 16~235, default = 235

Amlogic Proprietary and Confidential
Copyright © Amlogic. All rights reserved.

Bit(s)	R/W	Default	Description
15-8	R/W	16	reg_mcdi_reldetcolcfdavgmin0. avg luma min0 (>=) for column cofidence, valid between 16~235, default = 16
7-0	R/W	21	reg_mcdi_reldetcolcfdavgmax0. avg luma max0 (<) for column cofidence, valid between 16~235, default = 21

Table 10-997 MCDI_REL_DET_BAD_THD_0 0x2f44

Bit(s)	R/W	Default	Description
31-16	R/W		reserved
15-8	R/W	120	reg_mcdi_reldetbadsadthd. thd (>=) for bad sad, default = 120 (480/4)
7-6	R/W		reserved
5-0	R/W	12	reg_mcdi_reldetbadbadwthd. thd (>=) for bad badw, 0~42, default = 12

Table 10-998 MCDI_REL_DET_BAD_THD_1 0x2f45

Bit(s)	R/W	Default	Description
31-24	R/W		reserved
23-16	R/W	4	reg_mcdi_reldetbadrelfltthd. thd (>=) of flat for bad rel detection, default = 4
15-8	R/W	160	reg_mcdi_reldetbadrelthd1. thd (>=) for bad rel without gmv/lmv locked, default = 160
7-0	R/W	120	reg_mcdi_reldetbadrelthd0. thd (>=) for bad rel with gmv/lmv locked, default = 120

Table 10-999 MCDI_PD22_CHK_THD 0x2f46

Bit(s)	R/W	Default	Description
31-25	R/W		reserved
24-16	R/W	64	reg_mcdi_pd22chksaddifthd. sad dif thd (>=) for (pd22chksad - qsad) for pd22 check, default = 64
15-14	R/W		reserved
13-8	R/W	2	reg_mcdi_pd22chkqmvthd. thd (>=) of abs qmv for pd22 check, default = 2
7-0	R/W	4	reg_mcdi_pd22chkfltthd. thd (>=) of flat for pd22 check, default = 4

Table 10-1000 MCDI_PD22_CHK_GAIN_OFFST_0 0x2f47

Bit(s)	R/W	Default	Description
31-24	R/W	0	reg_mcdi_pd22chkedgeoffst0. offset0 of pd22chkedge from right film22 phase, -128~127, default = 0
23-21	R/W		reserved
20-16	R/W	16	reg_mcdi_pd22chkedgegain0. gain0 of pd22chkedge from right film22 phase, normalized to 16 as '1', default = 16
15-12	R/W		reserved

Amlogic Proprietary and Confidential
Copyright © Amlogic. All rights reserved.

Bit(s)	R/W	Default	Description
11-8	R/W	0	reg_mcdi_pd22chkbadwoffst0. offset0 of pd22chkbadw from right film22 phase, -8~7, default = 0
7-5	R/W		reserved
4-0	R/W	8	reg_mcdi_pd22chkbadwgain0. gain0 of pd22chkbadw from right film22 phase, normalized to 16 as '1', default = 8

Table 10-1001 MCDI_PD22_CHK_GAIN_OFFST_1 0x2f48

Bit(s)	R/W	Default	Description
31-24	R/W	0	reg_mcdi_pd22chkedgeoffst1. offset1 of pd22chkedge from right film22 phase, -128~127, default = 0
23-21	R/W		reserved
20-16	R/W	16	reg_mcdi_pd22chkedgegain1. gain1 of pd22chkedge from right film22 phase, normalized to 16 as '1', default = 16
15-12	R/W		reserved
11-8	R/W	0	reg_mcdi_pd22chkbadwoffst1. offset1 of pd22chkbadw from right film22 phase, -8~7, default = 0
7-5	R/W		reserved
4-0	R/W	12	reg_mcdi_pd22chkbadwgain1. gain1 of pd22chkbadw from right film22 phase, normalized to 16 as '1', default = 12

Table 10-1002 MCDI_LMV_LOCK_CNT_THD_GAIN 0x2f49

Bit(s)	R/W	Default	Description
31-20	R/W		reserved
19-16	R/W	6	reg_mcdi_lmvlockcntmax. max lmv lock count number, default = 6
15-12	R/W	0	reg_mcdi_lmvlockcntoffst. offset for lmv lock count, -8~7, default = 0
11-8	R/W	8	reg_mcdi_lmvlockcntgain. gain for lmv lock count, normalized 8 as '1', 15 is set to 16, default = 8
7-5	R/W		reserved
4-0	R/W	4	reg_mcdi_lmvlockcntthd. lmv count thd (>=) before be locked, 1~31, default = 4

Table 10-1003 MCDI_LMV_LOCK_ABS_DIF_THD 0x2f4a

Bit(s)	R/W	Default	Description
31-27	R/W		reserved
26-24	R/W	1	reg_mcdi_lmvlockdifthd2. lmv dif thd for third part, before locked, default = 1
23	R/W		reserved
22-20	R/W	1	reg_mcdi_lmvlockdifthd1. lmv dif thd for second part, before locked, default = 1
19	R/W		reserved
18-16	R/W	1	reg_mcdi_lmvlockdifthd0. lmv dif thd for first part, before locked, default = 1

Amlogic Proprietary and Confidential
Copyright © Amlogic. All rights reserved.

Bit(s)	R/W	Default	Description
15-13	R/W		reserved
12-8	R/W	24	reg_mcdi_lmvlockabsmax. max abs (<) of lmv to be locked, default = 24
7-5	R/W		reserved
4-0	R/W	1	reg_mcdi_lmvlockabsmin. min abs (>=) of lmv to be locked, default = 1

Table 10-1004 MCDI_LMV_LOCK_ROW 0x2f4b

Bit(s)	R/W	Default	Description
31-27	R/W		reserved
26-16	R/W	2047	reg_mcdi_lmvlockendrow. end row (<) for lmv lock, default = 2047
15-11	R/W		reserved
10-0	R/W	0	reg_mcdi_lmvlockstartrow. start row (>=) for lmv lock, default = 0

Table 10-1005 MCDI_LMV_LOCK_RT_MODE 0x2f4c

Bit(s)	R/W	Default	Description
31-27	R/W		reserved
26-24	R/W	2	reg_mcdi_lmvlockextmode. extend lines for lmv lock check, check how many lines for lmv locking, default = 2
23-16	R/W	32	reg_mcdi_lmvlockfltcntrt. ratio of flt cnt for lock check, normalized 256 as '1', 255 is set to 256, default = 32
15-8	R/W	48	reg_mcdi_lmvlocklmvcntrt1. ratio when use non-zero lmv for lock check, normalized 256 as '1', 255 is set to 256, default = 48
7-0	R/W	106	reg_mcdi_lmvlocklmvcntrt0. ratio when use max lmv for lock check, normalized 256 as '1', 255 is set to 256, default = 106

Table 10-1006 MCDI_GMV_LOCK_CNT_THD_GAIN 0x2f4d

Bit(s)	R/W	Default	Description
31-20	R/W		reserved
19-16	R/W	6	reg_mcdi_gmvlockcntmax. max gmv lock count number, default = 6
15-12	R/W	0	reg_mcdi_gmvlockcntoffst. offset for gmv lock count, -8~7, default = 0
11-8	R/W	8	reg_mcdi_gmvlockcntgain. gain for gmv lock count, normalized 8 as '1', 15 is set to 16, default = 8
7-5	R/W		reserved
4-0	R/W	4	reg_mcdi_gmvlockcntthd. gmv count thd (>=) before be locked, 1~31, default = 4

Amlogic Proprietary and Confidential
Copyright © Amlogic. All rights reserved.

Table 10-1007 MCDI_GMV_LOCK_ABS_DIF_THD 0x2f4e

Bit(s)	R/W	Default	Description
31-27	R/W		reserved
26-24	R/W	3	reg_mcdi_gmvlockdifthd2. gmv dif thd for third part, before locked, default = 3
23	R/W		reserved
22-20	R/W	2	reg_mcdi_gmvlockdifthd1. gmv dif thd for second part, before locked, default = 2
19	R/W		reserved
18-16	R/W	1	reg_mcdi_gmvlockdifthd0. gmv dif thd for first part, before locked, default = 1
15-13	R/W		reserved
12-8	R/W	15	reg_mcdi_gmvlockabsmax. max abs of gmv to be locked, default = 15
7-5	R/W		reserved
4-0	R/W	1	reg_mcdi_gmvlockabsmin. min abs of gmv to be locked, default = 1

Table 10-1008 MCDI_HIGH_VERT_FRQ_DIF_THD 0x2f4f

Bit(s)	R/W	Default	Description
31-0	R/W	103680	reg_mcdi_highvertfrqfldavgdifthd. high_vert_frq field average luma dif thd (>=), 3*Blk_Width*Blk_Height, set by software, default = 103680

Table 10-1009 MCDI_HIGH_VERT_FRQ_DIF_DIF_THD 0x2f50

Bit(s)	R/W	Default	Description
31-0	R/W	103680	reg_mcdi_highvertfrqfldavgdifdifthd. high_vert_frq field average luma dif's dif thd (<), 3*Blk_Width*Blk_Height, set by software, default = 103680

Table 10-1010 MCDI_HIGH_VERT_FRQ_RT_GAIN 0x2f51

Bit(s)	R/W	Default	Description
31-20	R/W		reserved
19-16	R/W	4	reg_mcdi_highvertfrqcntthd. high_vert_frq count thd (>=) before locked, 1~31, default = 4
15-8	R/W	24	reg_mcdi_highvertfrqbadsadrt. ratio for high_vert_frq bad sad count, normalized 256 as '1', 255 is set to 256, default = 24
7-0	R/W	130	reg_mcdi_highvertfrqbadbadwrt. ratio for high_vert_frq badw count, normalized 256 as '1', 255 is set to 256, default = 130

Table 10-1011 MCDI_MOTION_PARADOX_THD 0x2f52

Bit(s)	R/W	Default	Description
31-29	R/W		reserved
28-24	R/W	4	reg_mcdi_motionparadoxcntthd. motion paradox count thd (>=) before locked, 1~31, default = 4
23-22	R/W		reserved

Amlogic Proprietary and Confidential
Copyright © Amlogic. All rights reserved.

Bit(s)	R/W	Default	Description
21-16	R/W	32	reg_mcdi_motionparadoxgmvthd. abs gmv thd (<) of motion paradox, 0~32, note that 32 means invalid gmv, be careful, default = 32
15-0	R/W		reserved

Table 10-1012 MCDI_MOTION_PARADOX_RT 0x2f53

Bit(s)	R/W	Default	Description
31-24	R/W		reserved
23-16	R/W	24	reg_mcdi_motionparadoxbadsadrt. ratio for field bad sad count of motion paradox, normalized 256 as '1', 255 is set to 256, default = 24
15-8	R/W	120	reg_mcdi_motionparadoxbadrelrt. ratio for field bad reliabilty count of motion paradox, normalized 256 as '1', 255 is set to 256, default = 120
7-0	R/W	218	reg_mcdi_motionparadoxmtnrt. ratio for field motion count of motion paradox, normalized 256 as '1', 255 is set to 256, default = 218

Table 10-1013 MCDI_MOTION_REF_THD 0x2f54

Bit(s)	R/W	Default	Description
31-24	R/W		reserved
23-20	R/W	15	reg_mcdi_motionrefoffst. motion ref additive offset, default = 15
19-16	R/W	8	reg_mcdi_motionrefgain. motion ref gain, normalized 8 as '1', default = 8
15-13	R/W		reserved
12-8	R/W	1	reg_mcdi_motionrefrptmvthd. abs thd (>=) of rpt mv (0~31, 32 means invalid) for motion ref, default = 1
7-2	R/W	2	reg_mcdi_motionrefqmvthd. min thd (>=) of abs qmv for motion ref, note that quarter mv's range is -63~63, default = 2
1-0	R/W	1	reg_mcdi_motionreflpfmode. Mv and (8 x repeat flg) 's lpf mode of motion refinement, 0: no lpf, 1: [1 2 1], 2: [1 2 2 2 1], default = 1

Table 10-1014 MCDI_REL_COL_REF_RT 0x2f55

Bit(s)	R/W	Default	Description
31-8	R/W		reserved
7-0	R/W	135	reg_mcdi_relcolrefrt. ratio for column cofidence level against column number, for refinement, default = 135

Table 10-1015 MCDI_PD22_CHK_THD_RT 0x2f56

Bit(s)	R/W	Default	Description
31-27	R/W		reserved
26-16	R/W	1	reg_mcdi_pd22chkfltcntrt. ratio for flat count of field pulldown 22 check, normalized 2048 as '1', 2047 is set to 2048, default = 1
15-8	R/W	100	reg_mcdi_pd22chkcntrt. ratio of pulldown 22 check count, normalized 256 as '1', 255 is set to 256, default = 100

Amlogic Proprietary and Confidential
Copyright © Amlogic. All rights reserved.

Bit(s)	R/W	Default	Description
7-5	R/W		reserved
4-0	R/W	4	reg_mcdi_pd22chkcntthd. thd (>=) for pd22 count before locked, 1~31, default = 4

Table 10-1016 MCDI_CHAR_DET_DIF_THD 0x2f57

Bit(s)	R/W	Default	Description
31-24	R/W		reserved
23-16	R/W	64	reg_mcdi_chardetminmaxdifthd. thd (>=) for dif between min and max value, default = 64
15-8	R/W	17	reg_mcdi_chardetmaxdifthd. thd (<) for dif between max value, default = 17
7-0	R/W	17	reg_mcdi_chardetmindifthd. thd (<) for dif between min value, default = 17

Table 10-1017 MCDI_CHAR_DET_CNT_THD 0x2f58

Bit(s)	R/W	Default	Description
31-21	R/W		reserved
20-16	R/W	18	reg_mcdi_chardettotcntthd. thd (>=) for total count, 0~21, default = 18
15-13	R/W		reserved
12-8	R/W	1	reg_mcdi_chardetmaxcntthd. thd (>=) for max count, 0~21, default = 1
7-5	R/W		reserved
4-0	R/W	1	reg_mcdi_chardetmincntthd. thd (>=) for min count, 0~21, default = 1

Table 10-1018 MCDI_PD_22_CHK_WND0_X 0x2f59

Bit(s)	R/W	Default	Description
28-16	R/W	719	reg_mcdi_pd22chkwnd0_x1
12-0	R/W	0	reg_mcdi_pd22chkwnd0_x0

Table 10-1019 MCDI_PD_22_CHK_WND0_Y 0x2f5a

Bit(s)	R/W	Default	Description
28-16	R/W	39	reg_mcdi_pd22chkwnd0_y1
12-0	R/W	0	reg_mcdi_pd22chkwnd0_y0

Table 10-1020 MCDI_PD_22_CHK_WND1_X 0x2f5b

Bit(s)	R/W	Default	Description
28-16	R/W	719	reg_mcdi_pd22chkwnd1_x1
12-0	R/W	0	reg_mcdi_pd22chkwnd1_x0

Amlogic Proprietary and Confidential
Copyright © Amlogic. All rights reserved.

Table 10-1021 MCDI_PD_22_CHK_WND1_Y 0x2f5c

Bit(s)	R/W	Default	Description
28-16	R/W	199	reg_mcdi_pd22chkwnd1_y1
12-0	R/W	40	reg_mcdi_pd22chkwnd1_y0

Table 10-1022 MCDI_PD_22_CHK_FRC_LMV 0x2f5d

Bit(s)	R/W	Default	Description
10	R/W	1	reg_mcdi_pd22chklmvchk2
9	R/W	0	reg_mcdi_pd22chklmvchk1
8	R/W	0	reg_mcdi_pd22chklmvchk0
6	R/W	0	reg_mcdi_pd22chkfrcpd2
5	R/W	0	reg_mcdi_pd22chkfrcpd1
4	R/W	0	reg_mcdi_pd22chkfrcpd0
2	R/W	1	reg_mcdi_pd22chkfrcvof2
1	R/W	0	reg_mcdi_pd22chkfrcvof1
0	R/W	0	reg_mcdi_pd22chkfrcvof0

Table 10-1023 MCDI_PD_22_CHK_FRC_LMV 0x2f5e

Bit(s)	R/W	Default	Description
26	R/W	0	reg_mcdi_pd22chkflg2
25	R/W	0	reg_mcdi_pd22chkflg1
24	R/W	0	reg_mcdi_pd22chkflg
23-16	R/W	1	reg_mcdi_pd22chkcnt2
15-8	R/W	0	reg_mcdi_pd22chkcnt1
7-0	R/W	0	reg_mcdi_pd22chkcnt

Table 10-1024 MCDI_FIELD_MV 0x2f60

Bit(s)	R/W	Default	Description
23-16	R/W		reg_mcdi_fieldgmvcnt
14	R/W		reg_mcdi_fieldgmvlock
13-8	R/W		reg_mcdi_fieldrptmv. last field rpt mv
7-6	R/W		reserved
5-0	R/W		reg_mcdi_fieldgmv. last field gmv

Amlogic Proprietary and Confidential
Copyright © Amlogic. All rights reserved.

Table 10-1025 MCDI_FIELD_HVF_PRDX_CNT 0x2f61

Bit(s)	R/W	Default	Description
31-24	R/W		reg_mcdi_motionparadoxcnt.
23-17	R/W		reserved
16	R/W		reg_mcdi_motionparadoxflg.
15-8	R/W		reg_mcdi_highvertfrqcnt.
7-4	R/W		reserved
3-2	R/W		reg_mcdi_highvertfrqphase.
1	R/W		reserved
0	R/W		reg_mcdi_highvertfrqflg.

Table 10-1026 MCDI_FIELD_LUMA_AVG_SUM_0 0x2f62

Bit(s)	R/W	Default	Description
31-0	R/W		reg_mcdi_fld_luma_avg_sum0.

Table 10-1027 MCDI_FIELD_LUMA_AVG_SUM_1 0x2f63

Bit(s)	R/W	Default	Description
31-0	R/W		reg_mcdi_fld_luma_avg_sum1.

Table 10-1028 MCDI_YCBCR_BLEND_CRTL 0x2f64

Bit(s)	R/W	Default	Description
31-16	R/W		reserved
15-8	R/W	0	reg_mcdi_ycbcrblendgain. ycbcr blending gain for cbcr in ycbcr. default = 0
7-2	R/W		reserved.
1-0	R/W	2	reg_mcdi_ycbcrblendmode. 0:y+cmb(cb,cr), 1:med(r,g,b), 2:max(r,g,b), default = 2

Table 10-1029 MCDI_LMVLCKSTEXT_0 0x2f69

Bit(s)	R/W	Default	Description
27-16	R/W		reg_mcdi_lmvlckstext_1
11-0	R/W		reg_mcdi_lmvlckstext_0

Table 10-1030 MCDI_LMVLCKSTEXT_1 0x2f6a

Bit(s)	R/W	Default	Description
31	R/W	1	reg_mcdi_refnewmode
30	R/W	1	reg_mcdi_reflmvlck_en

Amlogic Proprietary and Confidential
Copyright © Amlogic. All rights reserved.

Bit(s)	R/W	Default	Description
29:28	R/W	0	reg_mcdi_lmvlckupdw_ext
27:16	R/W	8	reg_mcdi_lmvlckmin
11:0	R/W	0	reg_mcdi_lmvlckstext_2

Table 10-1031 MCDI_LMVLCKEDEXT_0 0x2f6b

Bit(s)	R/W	Default	Description
27:16	R/W	0	reg_mcdi_lmvlckedext_1
11:0	R/W	0	reg_mcdi_lmvlckedext_0

Table 10-1032 MCDI_LMVLCKEDEXT_1 0x2f6c

Bit(s)	R/W	Default	Description
11:0	R/W	0	reg_mcdi_lmvlckedext_2

Table 10-1033 MCDI_MC_CRTL 0x2f70

Bit(s)	R/W	Default	Description
31-20	R/W	0	reserved
19	R/W	0	reg buf1 enable (if1)
18	R/W	0	reg buf2 enable (if2)
17	R/W	0	reg mv invert
16	R/W	0	mcvec force 0
15	R/W	0	buf2 always en
14-12	R/W	0	reg_mcdi_mcvec_offset: 0: disable 1: 1 pixel offset of mcvec 2: 2 pixel offset of mcvec 3: 3 pixel offset of mcvec 4: 4 pixel offset of mcvec
11	R/w	0	reg_di_weave_both_side
10	R/W	0	reg_mcdi_mc_uv_en: mc for uv if needed, else use ma of uv
9-8	R/W	1	reg_mcdi_mcpreflg. flag to use previous field for MC, 0-forward field, 1: previous field,2-use forward & previous. default = 1
7	R/W	1	reg_mcdi_mcrelrefbycolcfden. enable rel refinement by column cofidence in mc blending, default = 1
6-5	R/W	0	reg_mcdi_mclpfen. enable mc pixles/rel lpf, 0:disable, 1: lpf rel, 2: lpf mc pxls, 3: lpf both rel and mc pxls, default = 0
4-2	R/W	0	reg_mcdi_mcdebugmode. enable mc debug mode, 0:disable, 1: split left/right, 2: split top/bottom, 3: debug mv, 4: debug rel, default = 0
1-0	R/W	1	reg_mcdi_mcen. mcdi enable mode, 0:disable, 1: blend with ma, 2: full mc, default = 1

Amlogic Proprietary and Confidential
Copyright © Amlogic. All rights reserved.

Table 10-1034 MCDI_MC_LPF_MSK_0 0x2f71

Bit(s)	R/W	Default	Description
31-29	R/W		reserved
28	R		blend output ready
27	R		mcvec read input ready
26	R		mtn read input ready, same as bit24
25	R		ei dout ready (if0)
24	R		mtn read input ready
23	R		if2 input ready
22	R		if1 input ready
21	R		blend input ready
20-16	R/W	0	reg_mcdi_mclpfmsk02. mc lpf coef. 2 for pixel 0 of current block, normalized 16 as '1', default = 0
15-13	R/W		reserved
12-8	R/W	9	reg_mcdi_mclpfmsk01. mc lpf coef. 1 for pixel 0 of current block, normalized 16 as '1', default = 9
7-5	R/W		reserved
4-0	R/W	7	reg_mcdi_mclpfmsk00. mc lpf coef. 0 for pixel 0 of current block, normalized 16 as '1', default = 7

Table 10-1035 MCDI_MC_LPF_MSK_1 0x2f72

Bit(s)	R/W	Default	Description
31-29	R/W		reserved
28-21	R		debug info
20-16	R/W	0	reg_mcdi_mclpfmsk12. mc lpf coef. 2 for pixel 1 of current block, 0~16, normalized 16 as '1', default = 0
15-13	R/W		reserved
12-8	R/W	11	reg_mcdi_mclpfmsk11. mc lpf coef. 1 for pixel 1 of current block, 0~16, normalized 16 as '1', default = 11
7-5	R/W		reserved
4-0	R/W	5	reg_mcdi_mclpfmsk10. mc lpf coef. 0 for pixel 1 of current block, 0~16, normalized 16 as '1', default = 5

Table 10-1036 MCDI_MC_LPF_MSK_2 0x2f73

Bit(s)	R/W	Default	Description
31-29	R/W		reserved
28-21	R		debug info
20-16	R/W	1	reg_mcdi_mclpfmsk22. mc lpf coef. 2 for pixel 2 of current block, 0~16, normalized 16 as '1', default = 1
15-13	R/W		reserved

Amlogic Proprietary and Confidential
Copyright © Amlogic. All rights reserved.

Bit(s)	R/W	Default	Description
12-8	R/W	14	reg_mcdi_mclpfmsk21. mc lpf coef. 1 for pixel 2 of current block, 0~16, normalized 16 as '1', default = 14
7-5	R/W		reserved
4-0	R/W	1	reg_mcdi_mclpfmsk20. mc lpf coef. 0 for pixel 2 of current block, 0~16, normalized 16 as '1', default = 1

Table 10-1037 MCDI_MC_LPF_MSK_3 0x2f74

Bit(s)	R/W	Default	Description
31-29	R/W		reserved
28-21	R		debug info
20-16	R/W	5	reg_mcdi_mclpfmsk32. mc lpf coef. 2 for pixel 3 of current block, 0~16, normalized 16 as '1', default = 5
15-13	R/W		reserved
12-8	R/W	11	reg_mcdi_mclpfmsk31. mc lpf coef. 1 for pixel 3 of current block, 0~16, normalized 16 as '1', default = 11
7-5	R/W		reserved
4-0	R/W	0	reg_mcdi_mclpfmsk30. mc lpf coef. 0 for pixel 3 of current block, 0~16, normalized 16 as '1', default = 0

Table 10-1038 MCDI_MC_LPF_MSK_4 0x2f75

Bit(s)	R/W	Default	Description
31-21	R/W		reserved
20-16	R/W	7	reg_mcdi_mclpfmsk42. mc lpf coef. 2 for pixel 4 of current block, 0~16, normalized 16 as '1', default = 7
15-13	R/W		reserved
12-8	R/W	9	reg_mcdi_mclpfmsk41. mc lpf coef. 1 for pixel 4 of current block, 0~16, normalized 16 as '1', default = 9
7-5	R/W		reserved
4-0	R/W	0	reg_mcdi_mclpfmsk40. mc lpf coef. 0 for pixel 4 of current block, 0~16, normalized 16 as '1', default = 0

Table 10-1039 MCDI_MC_REL_GAIN_OFFST_0 0x2f76

Bit(s)	R/W	Default	Description
31-26	R/W		reserved
25	R/W	0	reg_mcdi_mcmotionparadoxflg. flag of motion paradox, initial with 0 and read from software, default = 0
24	R/W	0	reg_mcdi_mchighvertfrqflg. flag of high vert frq, initial with 0 and read from software, default = 0
23-16	R/W	128	reg_mcdi_mcmotionparadoxoffst. offset (r+ offset) for rel (MC blending coef.) refinement if motion paradox detected before MC blending before MC blending, default = 128

Amlogic Proprietary and Confidential
Copyright © Amlogic. All rights reserved.

Bit(s)	R/W	Default	Description
15-12	R/W		reserved
11-8	R/W	8	reg_mcdi_mcmotionparadoxgain. gain for rel (MC blending coef.) refinement if motion paradox detected before MC blending, normalized 8 as '1', set 15 to 16, default = 8
7-4	R/W	15	reg_mcdi_mchighvertfrqoffst. minus offset (alpha - offset) for motion (MA blending coef.) refinement if high vertical frequency detected before MA blending, default = 15
3-0	R/W	8	reg_mcdi_mchighvertfrqgain. gain for motion (MA blending coef.) refinement if high vertical frequency detected before MA blending, normalized 8 as '1', set 15 to 16, default = 8

Table 10-1040 MCDI_MC_REL_GAIN_OFFST_1 0x2f77

Bit(s)	R/W	Default	Description
31-24	R/W	255	reg_mcdi_mcoutofboundrayoffst. offset (rel + offset) for rel (MC blending coef.) refinement if MC pointed out of boundray before MC blending before MC blending, default = 255
23-20	R/W		reserved
19-16	R/W	8	reg_mcdi_mcoutofboundraygain. gain for rel (MC blending coef.) refinement if MC pointed out of boundray before MC blending, normalized 8 as '1', set 15 to 16, default = 8
15-8	R/W	255	reg_mcdi_mcrelrefbycolcfdoffst. offset (rel + offset) for rel (MC blending coef.) refinement if motion paradox detected before MC blending before MC blending, default = 255
7-4	R/W		reserved.
3-0	R/W	8	reg_mcdi_mcrelrefbycolcfdgain. gain for rel (MC blending coef.) refinement if column cofidence failed before MC blending, normalized 8 as '1', set 15 to 16, default = 8

Table 10-1041 MCDI_MC_COL_CFD_0 0x2f78

Bit(s)	R/W	Default	Description
31-0	R/W		mcdi_mc_col_cfd_0. column cofidence value 0 read from software. initial = 0

Table 10-1042 MCDI_MC_COL_CFD_1 0x2f79

Bit(s)	R/W	Default	Description
31-0	R/W		mcdi_mc_col_cfd_1. column cofidence value 1 read from software. initial = 0

Table 10-1043 MCDI_MC_COL_CFD_2 0x2f7a

Bit(s)	R/W	Default	Description
31-0	R/W		mcdi_mc_col_cfd_2. column cofidence value 2 read from software. initial = 0

Amlogic Proprietary and Confidential
Copyright © Amlogic. All rights reserved.

Table 10-1044 MCDI_MC_COL_CFD_3 0x2f7b

Bit(s)	R/W	Default	Description
31-0	R/W		mcdi_mc_col_cfd_3. column cofidence value 3 read from software. initial = 0

Table 10-1045 MCDI_MC_COL_CFD_4 0x2f7c

Bit(s)	R/W	Default	Description
31-0	R/W		mcdi_mc_col_cfd_4. column cofidence value 4 read from software. initial = 0

Table 10-1046 MCDI_MC_COL_CFD_5 0x2f7d

Bit(s)	R/W	Default	Description
31-0	R/W		mcdi_mc_col_cfd_4. column cofidence value 5 read from software. initial = 0

Table 10-1047 MCDI_MC_COL_CFD_6 0x2f7e

Bit(s)	R/W	Default	Description
31-0	R/W		mcdi_mc_col_cfd_4. column cofidence value 6 read from software. initial = 0

Table 10-1048 MCDI_MC_COL_CFD_7 0x2f7f

Bit(s)	R/W	Default	Description
31-0	R/W		mcdi_mc_col_cfd_4. column cofidence value 7 read from software. initial = 0

Table 10-1049 MCDI_MC_COL_CFD_8 0x2f80

Bit(s)	R/W	Default	Description
31-0	R/W		mcdi_mc_col_cfd_4. column cofidence value 8 read from software. initial = 0

Table 10-1050 MCDI_MC_COL_CFD_9 0x2f81

Bit(s)	R/W	Default	Description
31-0	R/W		mcdi_mc_col_cfd_4. column cofidence value 9 read from software. initial = 0

Table 10-1051 MCDI_MC_COL_CFD_10 0x2f82

Bit(s)	R/W	Default	Description
31-0	R/W		mcdi_mc_col_cfd_4. column cofidence value 10 read from software. initial = 0

Table 10-1052 MCDI_MC_COL_CFD_11 0x2f83

Bit(s)	R/W	Default	Description
31-0	R/W		mcdi_mc_col_cfd_4. column cofidence value 11 read from software. initial = 0

Amlogic Proprietary and Confidential
Copyright © Amlogic. All rights reserved.

Table 10-1053 MCDI_MC_COL_CFD_12 0x2f84

Bit(s)	R/W	Default	Description
31-0	R/W		mcdi_mc_col_cfd_4. column cofidence value 12 read from software. initial = 0

Table 10-1054 MCDI_MC_COL_CFD_13 0x2f85

Bit(s)	R/W	Default	Description
31-0	R/W		mcdi_mc_col_cfd_4. column cofidence value 13 read from software. initial = 0

Table 10-1055 MCDI_MC_COL_CFD_14 0x2f86

Bit(s)	R/W	Default	Description
31-0	R/W		mcdi_mc_col_cfd_4. column cofidence value 14 read from software. initial = 0

Table 10-1056 MCDI_MC_COL_CFD_15 0x2f87

Bit(s)	R/W	Default	Description
31-0	R/W		mcdi_mc_col_cfd_4. column cofidence value 15 read from software. initial = 0

Table 10-1057 MCDI_MC_COL_CFD_16 0x2f88

Bit(s)	R/W	Default	Description
31-0	R/W		mcdi_mc_col_cfd_4. column cofidence value 16 read from software. initial = 0

Table 10-1058 MCDI_MC_COL_CFD_17 0x2f89

Bit(s)	R/W	Default	Description
31-0	R/W		mcdi_mc_col_cfd_4. column cofidence value 17 read from software. initial = 0

Table 10-1059 MCDI_MC_COL_CFD_18 0x2f8a

Bit(s)	R/W	Default	Description
31-0	R/W		mcdi_mc_col_cfd_4. column cofidence value 18 read from software. initial = 0

Table 10-1060 MCDI_MC_COL_CFD_19 0x2f8b

Bit(s)	R/W	Default	Description
31-0	R/W		mcdi_mc_col_cfd_4. column cofidence value 19 read from software. initial = 0

Amlogic Proprietary and Confidential
Copyright © Amlogic. All rights reserved.

Table 10-1061 MCDI_MC_COL_CFD_20 0x2f8c

Bit(s)	R/W	Default	Description
31-0	R/W		mcdi_mc_col_cfd_4. column cofidence value 20 read from software. initial = 0

Table 10-1062 MCDI_MC_COL_CFD_21 0x2f8d

Bit(s)	R/W	Default	Description
31-0	R/W		mcdi_mc_col_cfd_4. column cofidence value 21 read from software. initial = 0

Table 10-1063 MCDI_MC_COL_CFD_22 0x2f8e

Bit(s)	R/W	Default	Description
31-0	R/W		mcdi_mc_col_cfd_4. column cofidence value 22 read from software. initial = 0

Table 10-1064 MCDI_MC_COL_CFD_23 0x2f8f

Bit(s)	R/W	Default	Description
31-0	R/W		mcdi_mc_col_cfd_4. column cofidence value 23 read from software. initial = 0

Table 10-1065 MCDI_MC_COL_CFD_24 0x2f90

Bit(s)	R/W	Default	Description
31-0	R/W		mcdi_mc_col_cfd_4. column cofidence value 24 read from software. initial = 0

Table 10-1066 MCDI_MC_COL_CFD_25 0x2f91

Bit(s)	R/W	Default	Description
31-0	R/W		mcdi_mc_col_cfd_4. column cofidence value 25 read from software. initial = 0

Table 10-1067 MCDI_RO_FLD_LUMA_AVG_SUM 0x2fa0

Bit(s)	R/W	Default	Description
31-0	R		ro_mcdi_fldlumaavgsum. block's luma avg sum of current filed (block based). initial = 0

Table 10-1068 MCDI_RO_GMV_VLD_CNT 0x2fa1

Bit(s)	R/W	Default	Description
31-0	R		ro_mcdi_gmvvldcnt. valid gmv's count of pre one filed (block based). initial = 0

Table 10-1069 MCDI_RO_RPT_FLG_CNT 0x2fa2

Bit(s)	R/W	Default	Description
31-0	R		ro_mcdi_rptflgcnt. repeat mv's count of pre one filed (block based). initial = 0

Amlogic Proprietary and Confidential
Copyright © Amlogic. All rights reserved.

Table 10-1070 MCDI_RO_FLD_BAD_SAD_CNT 0x2fa3

Bit(s)	R/W	Default	Description
31-0	R		ro_mcdi_fldbadsadcnt. bad sad count of whole pre one field (block based). initial = 0

Table 10-1071 MCDI_RO_FLD_BAD_BADW_CNT 0x2fa4

Bit(s)	R/W	Default	Description
31-0	R		ro_mcdi_fldbadbadwcnt. bad badw count of whole pre one field (block based). initial = 0

Table 10-1072 MCDI_RO_FLD_BAD_REL_CNT 0x2fa5

Bit(s)	R/W	Default	Description
31-0	R		ro_mcdi_fldbadrelcnt. bad rel count of whole pre one field (block based). initial = 0

Table 10-1073 MCDI_RO_FLD_MTN_CNT 0x2fa6

Bit(s)	R/W	Default	Description
31-0	R		ro_mcdi_fldmtncnt. motion count of whole pre one field (pixel based). initial = 0

Table 10-1074 MCDI_RO_FLD_VLD_CNT 0x2fa7

Bit(s)	R/W	Default	Description
31-0	R		ro_mcdi_fldvldcnt. valid motion count of whole pre one field (pixel based). initial = 0

Table 10-1075 MCDI_RO_FLD_PD_22_PRE_CNT 0x2fa8

Bit(s)	R/W	Default	Description
31-0	R		ro_mcdi_fldpd22precnt. prevoius pd22 check count of whole pre one field (block based). initial = 0

Table 10-1076 MCDI_RO_FLD_PD_22_FOR_CNT 0x2fa9

Bit(s)	R/W	Default	Description
31-0	R		ro_mcdi_fldpd22forcnt. forward pd22 check count of whole pre one field (block based). initial = 0

Table 10-1077 MCDI_RO_FLD_PD_22_FLT_CNT 0x2faa

Bit(s)	R/W	Default	Description
31-0	R		ro_mcdi_fldpd22fltcnt. flat count (for pd22 check) of whole pre one field (block based). initial = 0

Amlogic Proprietary and Confidential
Copyright © Amlogic. All rights reserved.

Table 10-1078 MCDI_RO_HIGH_VERT_FRQ_FLG 0x2fab

Bit(s)	R/W	Default	Description
31-16	R		reserved.
15-8	R		ro_mcdi_highvertfrqcnt. high vertical frequency count till prevoius one field. initial = 0
7-3	R		reserved.
2-1	R		ro_mcdi_highvertfrqphase. high vertical frequency phase of prevoius one field. initial = 2
0	R		ro_mcdi_highvertfrqflg. high vertical frequency flag of prevoius one field. initial = 0

Table 10-1079 MCDI_RO_GMV_LOCK_FLG 0x2fac

Bit(s)	R/W	Default	Description
31-16	R		reserved.
15-8	R		ro_mcdi_gmvlckcnt. global mv lock count till prevoius one field. initial = 0
7-2	R		ro_mcdi_gmv. global mv of prevoius one field. -31~31, initial = 32 (invalid value)
1	R		ro_mcdi_zerogmvlckflg. zero global mv lock flag of prevoius one field. initial = 0
0	R		ro_mcdi_gmvlckflg. global mv lock flag of prevoius one field. initial = 0

Table 10-1080 MCDI_RO_RPT_MV 0x2fad

Bit(s)	R/W	Default	Description
5-0	R		ro_mcdi_rptmv. repeate mv of prevoius one field. -31~31, initial = 32 (invalid value)

Table 10-1081 MCDI_RO_MOTION_PARADOX_FLG 0x2fae

Bit(s)	R/W	Default	Description
31-16	R		reserved.
15-8	R		ro_mcdi_motionparadoxcnt. motion paradox count till prevoius one field. initial = 0
7-1	R		reserved.
0	R		ro_mcdi_motionparadoxflg. motion paradox flag of prevoius one field. initial = 0

Table 10-1082 MCDI_RO_PD_22_FLG 0x2faf

Bit(s)	R/W	Default	Description
31-16	R		reserved.
26	R	0	ro_mcdi_pd22flg2. pull down 22 flag of prevoius one field. initial = 0
25	R	0	ro_mcdi_pd22flg1. pull down 22 flag of prevoius one field. initial = 0
24	R	0	ro_mcdi_pd22flg0. pull down 22 flag of prevoius one field. initial = 0

Amlogic Proprietary and Confidential
Copyright © Amlogic. All rights reserved.

Bit(s)	R/W	Default	Description
23-16	R	0	ro_mcdi_pd22cnt2. pull down 22 count till prevoius one field. initial = 0
15-8	R	0	ro_mcdi_pd22cnt1. pull down 22 count till prevoius one field. initial = 0
7-0	R	0	ro_mcdi_pd22cnt0. pull down 22 count till prevoius one field. initial = 0

Table 10-1083 MCDI_RO_COL_CFD_0 0x2fb0

Bit(s)	R/W	Default	Description
31-0	R		ro_mcdi_col_cfd_0. column cofidence value 0. initial = 0

Table 10-1084 MCDI_RO_COL_CFD_1 0x2fb1

Bit(s)	R/W	Default	Description
31-0	R		ro_mcdi_col_cfd_1. column cofidence value 1. initial = 0

Table 10-1085 MCDI_RO_COL_CFD_2 0x2fb2

Bit(s)	R/W	Default	Description
31-0	R		ro_mcdi_col_cfd_2. column cofidence value 2. initial = 0

Table 10-1086 MCDI_RO_COL_CFD_3 0x2fb3

Bit(s)	R/W	Default	Description
31-0	R		ro_mcdi_col_cfd_3. column cofidence value 3. initial = 0

Table 10-1087 MCDI_RO_COL_CFD_4 0x2fb4

Bit(s)	R/W	Default	Description
31-0	R		ro_mcdi_col_cfd_4. column cofidence value 4. initial = 0

Table 10-1088 MCDI_RO_COL_CFD_5 0x2fb5

Bit(s)	R/W	Default	Description
31-0	R		ro_mcdi_col_cfd_5. column cofidence value 5. initial = 0

Table 10-1089 MCDI_RO_COL_CFD_6 0x2fb6

Bit(s)	R/W	Default	Description
31-0	R		ro_mcdi_col_cfd_6. column cofidence value 6. initial = 0

Amlogic Proprietary and Confidential
Copyright © Amlogic. All rights reserved.

Table 10-1090 MCDI_RO_COL_CFD_7 0x2fb7

Bit(s)	R/W	Default	Description
31-0	R		ro_mcdi_col_cfd_7. column cofidence value 7. initial = 0

Table 10-1091 MCDI_RO_COL_CFD_8 0x2fb8

Bit(s)	R/W	Default	Description
31-0	R		ro_mcdi_col_cfd_8. column cofidence value 8. initial = 0

Table 10-1092 MCDI_RO_COL_CFD_9 0x2fb9

Bit(s)	R/W	Default	Description
31-0	R		ro_mcdi_col_cfd_9. column cofidence value 9. initial = 0

Table 10-1093 MCDI_RO_COL_CFD_10 0x2fba

Bit(s)	R/W	Default	Description
31-0	R		ro_mcdi_col_cfd_10. column cofidence value 10. initial = 0

Table 10-1094 MCDI_RO_COL_CFD_11 0x2fbb

Bit(s)	R/W	Default	Description
31-0	R		ro_mcdi_col_cfd_11. column cofidence value 11. initial = 0

Table 10-1095 MCDI_RO_COL_CFD_12 0x2fbc

Bit(s)	R/W	Default	Description
31-0	R		ro_mcdi_col_cfd_12. column cofidence value 12. initial = 0

Table 10-1096 MCDI_RO_COL_CFD_13 0x2fbd

Bit(s)	R/W	Default	Description
31-0	R		ro_mcdi_col_cfd_13. column cofidence value 13. initial = 0

Table 10-1097 MCDI_RO_COL_CFD_14 0x2fbe

Bit(s)	R/W	Default	Description
31-0	R		ro_mcdi_col_cfd_14. column cofidence value 14. initial = 0

Table 10-1098 MCDI_RO_COL_CFD_15 0x2fbf

Bit(s)	R/W	Default	Description
31-0	R		ro_mcdi_col_cfd_15. column cofidence value 15. initial = 0

Amlogic Proprietary and Confidential
Copyright © Amlogic. All rights reserved.

Table 10-1099 MCDI_RO_COL_CFD_16 0x2fc0

Bit(s)	R/W	Default	Description
31-0	R		ro_mcdi_col_cfd_16. column cofidence value 16. initial = 0

Table 10-1100 MCDI_RO_COL_CFD_17 0x2fc1

Bit(s)	R/W	Default	Description
31-0	R		ro_mcdi_col_cfd_17. column cofidence value 17. initial = 0

Table 10-1101 MCDI_RO_COL_CFD_18 0x2fc2

Bit(s)	R/W	Default	Description
31-0	R		ro_mcdi_col_cfd_18. column cofidence value 18. initial = 0

Table 10-1102 MCDI_RO_COL_CFD_19 0x2fc3

Bit(s)	R/W	Default	Description
31-0	R		ro_mcdi_col_cfd_19. column cofidence value 19. initial = 0

Table 10-1103 MCDI_RO_COL_CFD_20 0x2fc4

Bit(s)	R/W	Default	Description
31-0	R		ro_mcdi_col_cfd_20. column cofidence value 20. initial = 0

Table 10-1104 MCDI_RO_COL_CFD_21 0x2fc5

Bit(s)	R/W	Default	Description
31-0	R		ro_mcdi_col_cfd_21. column cofidence value 21. initial = 0

Table 10-1105 MCDI_RO_COL_CFD_22 0x2fc6

Bit(s)	R/W	Default	Description
31-0	R		ro_mcdi_col_cfd_22. column cofidence value 22. initial = 0

Table 10-1106 MCDI_RO_COL_CFD_23 0x2fc7

Bit(s)	R/W	Default	Description
31-0	R		ro_mcdi_col_cfd_23. column cofidence value 23. initial = 0

Amlogic Proprietary and Confidential
Copyright © Amlogic. All rights reserved.

Table 10-1107 MCDI_RO_COL_CFD_24 0x2fc8

Bit(s)	R/W	Default	Description
31-0	R		ro_mcdi_col_cfd_24. column cofidence value 24. initial = 0

Table 10-1108 MCDI_RO_COL_CFD_25 0x2fc9

Bit(s)	R/W	Default	Description
31-0	R		ro_mcdi_col_cfd_25. column cofidence value 25. initial = 0

Table 10-1109 MCDI_RO_FLD_PD_22_PRE_CNT1 0x2fca

Bit(s)	R/W	Default	Description
31-0	R		previous pd22 check count of whole pre one field(block based). initial = 0

Table 10-1110 MCDI_RO_FLD_PD_22_POR_CNT1 0x2fcb

Bit(s)	R/W	Default	Description
31-0	R		forward pd22 check count of whole pre one field(block based). initial = 0

Table 10-1111 MCDI_RO_FLD_PD_22_FLT_CNT1 0x2fcc

Bit(s)	R/W	Default	Description
31-0	R		flat count(for pd22 check) of whole pre one field(block based). initial = 0

Table 10-1112 MCDI_RO_FLD_PD_22_PRE_CNT2 0x2fcd

Bit(s)	R/W	Default	Description
31-0	R		previous pd22 check count of whole pre one field(block based). initial = 0

Table 10-1113 MCDI_RO_FLD_PD_22_POR_CNT2 0x2fce

Bit(s)	R/W	Default	Description
31-0	R		forward pd22 check count of whole pre one field(block based). initial = 0

Table 10-1114 MCDI_RO_FLD_PD_22_FLT_CNT2 0x2fcf

Bit(s)	R/W	Default	Description
31-0	R		flat count(for pd22 check) of whole pre one field(block based). initial = 0

Amlogic Proprietary and Confidential
Copyright © Amlogic. All rights reserved.

10.2.3.14 PULLDOWN Registers

Register Address

- DIPD_COMB_CTRL0 0xff00bf40
- DIPD_COMB_CTRL1 0xff00bf44
- DIPD_COMB_CTRL2 0xff00bf48
- DIPD_COMB_CTRL3 0xff00bf4c
- DIPD_COMB_CTRL4 0xff00bf50
- DIPD_COMB_CTRL5 0xff00bf54
- DIPD_RO_COMB_0 0xff00bf58
- DIPD_RO_COMB_1 0xff00bf5c
- DIPD_RO_COMB_2 0xff00bf60
- DIPD_RO_COMB_3 0xff00bf64
- DIPD_RO_COMB_4 0xff00bf68
- DIPD_RO_COMB_5 0xff00bf6c
- DIPD_RO_COMB_6 0xff00bf70
- DIPD_RO_COMB_7 0xff00bf74
- DIPD_RO_COMB_8 0xff00bf78
- DIPD_RO_COMB_9 0xff00bf7c
- DIPD_RO_COMB_10 0xff00bf80
- DIPD_RO_COMB_11 0xff00bf84
- DIPD_RO_COMB_12 0xff00bf88
- DIPD_RO_COMB_13 0xff00bf8c
- DIPD_RO_COMB_14 0xff00bf90
- DIPD_RO_COMB_15 0xff00bf94
- DIPD_RO_COMB_16 0xff00bf98
- DIPD_RO_COMB_17 0xff00bf9c
- DIPD_RO_COMB_18 0xff00bfa0
- DIPD_RO_COMB_19 0xff00bfa4
- DIPD_RO_COMB_20 0xff00bfa8
- DIPD_COMB_CTRL6 0xff00bfac
- DI_PD_GRAD_CTRL 0xff005f80
- DI_PD_GRAD_TH_P 0xff005f84
- DI_PD_GRAD_TH_N 0xff005f88
- DI_PD_GRAD_GAIN_P 0xff005f8c
- DI_PD_GRAD_GAIN_N 0xff005f90
- DI_PD_RO_SUM_P_WIN0 0xff005f94
- DI_PD_RO_SUM_P_WIN1 0xff005f98
- DI_PD_RO_SUM_P_WIN2 0xff005f9c
- DI_PD_RO_SUM_P_WIN3 0xff005fa0
- DI_PD_RO_SUM_P_WIN4 0xff005fa4
- DI_PD_RO_SUM_N_WIN0 0xff005fa8
- DI_PD_RO_SUM_N_WIN1 0xff005fac
- DI_PD_RO_SUM_N_WIN2 0xff005fb0

Amlogic Proprietary and Confidential
Copyright © Amlogic. All rights reserved.

- DI_PD_RO_SUM_N_WIN3 0xff005fb4
- DI_PD_RO_SUM_N_WIN4 0xff005fb8
- DI_PD_RO_CNT_P_WIN0 0xff005fbc
- DI_PD_RO_CNT_P_WIN1 0xff005fc0
- DI_PD_RO_CNT_P_WIN2 0xff005fc4
- DI_PD_RO_CNT_P_WIN3 0xff005fc8
- DI_PD_RO_CNT_P_WIN4 0xff005fcc
- DI_PD_RO_CNT_N_WIN0 0xff005fd0
- DI_PD_RO_CNT_N_WIN1 0xff005fd4
- DI_PD_RO_CNT_N_WIN2 0xff005fd8
- DI_PD_RO_CNT_N_WIN3 0xff005fdc
- DI_PD_RO_CNT_N_WIN4 0xff005fe0
- DI_PD_RO_SUM_P 0xff005fe4
- DI_PD_RO_SUM_N 0xff005fe8
- DI_PD_RO_CNT_P 0xff005fec
- DI_PD_RO_CNT_N 0xff005ff0

Register Description

Table 10-1115 DIPD_COMB_CTRL0 0x2fd0

Bit(s)	R/W	Default	Description
31-24	W		Cmb_v_dif_min
23-16	W		Cmb_v_dif_max
15-8	W		Cmb_crg_min
7-0	W		Cmb_crg_max

Table 10-1116 DIPD_COMB_CTRL1 0x2fd1

Bit(s)	R/W	Default	Description
31	W		Pd_check_en
29-24	W		Cmb_wv_min3
21-16	W		Cmb_wv_min2
13-8	W		Cmb_wv_min1
5-0	W		Cmb_wv_min0

Table 10-1117 DIPD_COMB_CTRL2 0x2fd2

Bit(s)	R/W	Default	Description
31-28	W		Cmb_wnd_cnt1
25-20	W		Ccnt_cmmin1
19-16	W		Ccnt_mtmin

Amlogic Proprietary and Confidential
Copyright © Amlogic. All rights reserved.

Bit(s)	R/W	Default	Description
13-8	W		Ccnt_cmmin
5-0	W		Cmb_wv_min4

Table 10-1118 DIPD_COMB_CTRL3 0x2fd3

Bit(s)	R/W	Default	Description
31	W		Cmb32spcl
17-12	W		Cmb_wnd_mthd
11-4	W		Cmb_abs_nocmb
3-0	W		Cnt_minlen

Table 10-1119 DIPD_COMB_CTRL4 0x2fd4

Bit(s)	R/W	Default	Description
30	W		Flm_stamtn_en
29-28	W		In_horflt
27-20	W		Alpha
19-16	W		Rhtran_ctmtd
15-8	W		Htran_mnth1
7-0	W		Htran_mnth0

Table 10-1120 DIPD_COMB_CTRL5 0x2fd5

Bit(s)	R/W	Default	Description
31-24	W		Fld_mindif
23-16	W		Frm_mindif
13-8	W		Flm_smp_mtn_cnt
7-0	W		Flm_smp_mtn_thd

Table 10-1121 DIPD_RO_COMB_0 0x2fd6

Bit(s)	R/W	Default	Description
31-0	R		frmdif

Table 10-1122 DIPD_RO_COMB_1 0x2fd7

Bit(s)	R/W	Default	Description
31-0	R		Frmdif0

Amlogic Proprietary and Confidential
Copyright © Amlogic. All rights reserved.

Table 10-1123 DIPD_RO_COMB_2 0x2fd8

Bit(s)	R/W	Default	Description
31-0	R		Frmdif1

Table 10-1124 DIPD_RO_COMB_3 0x2fd9

Bit(s)	R/W	Default	Description
31-0	R		Frmdif2

Table 10-1125 DIPD_RO_COMB_4 0x2fda

Bit(s)	R/W	Default	Description
31-0	R		Frmdif3

Table 10-1126 DIPD_RO_COMB_5 0x2fdb

Bit(s)	R/W	Default	Description
31-0	R		Frmdif4

Table 10-1127 DIPD_RO_COMB_6 0x2fdc

Bit(s)	R/W	Default	Description
31-0	R		fldif

Table 10-1128 DIPD_RO_COMB_7 0x2fdd

Bit(s)	R/W	Default	Description
31-0	R		Fldif0

Table 10-1129 DIPD_RO_COMB_8 0x2fde

Bit(s)	R/W	Default	Description
31-0	R		Fldif1

Table 10-1130 DIPD_RO_COMB_9 0x2fdf

Bit(s)	R/W	Default	Description
31-0	R		Fldif2

Table 10-1131 DIPD_RO_COMB_10 0x2fe0

Bit(s)	R/W	Default	Description
31-0	R		Fldif3

Amlogic Proprietary and Confidential
Copyright © Amlogic. All rights reserved.

Table 10-1132 DIPD_RO_COMB_11 0x2fe1

Bit(s)	R/W	Default	Description
31-0	R		Flddif4

Table 10-1133 DIPD_RO_COMB_12 0x2fe2

Bit(s)	R/W	Default	Description
31-0	R		Ro_rt0

Table 10-1134 DIPD_RO_COMB_13 0x2fe3

Bit(s)	R/W	Default	Description
31-0	R		Ro_rt1

Table 10-1135 DIPD_RO_COMB_14 0x2fe4

Bit(s)	R/W	Default	Description
31-0	R		Ro_rt2

Table 10-1136 DIPD_RO_COMB_15 0x2fe5

Bit(s)	R/W	Default	Description
31-0	R		Ro_rt3

Table 10-1137 DIPD_RO_COMB_16 0x2fe6

Bit(s)	R/W	Default	Description
31-0	R		Ro_rt4

Table 10-1138 DIPD_RO_COMB_17 0x2fe7

Bit(s)	R/W	Default	Description
31-0	R		Ro_rt5

Table 10-1139 DIPD_RO_COMB_18 0x2fe8

Bit(s)	R/W	Default	Description
31-0	R		Ro_rt6

Table 10-1140 DIPD_RO_COMB_19 0x2fe9

Bit(s)	R/W	Default	Description
31-0	R		Ro_rt7

Amlogic Proprietary and Confidential
Copyright © Amlogic. All rights reserved.

Table 10-1141 DIPD_RO_COMB_20 0x2fea

Bit(s)	R/W	Default	Description
31-0	R		Ro_rt8

Table 10-1142 DIPD_COMB_CTRL5 0x2fd5

Bit(s)	R/W	Default	Description
31-24	W		Fld_mindif
23-16	W		Frm_mindif
13-8	W		Flm_smp_mtn_cnt
7-0	W		Flm_smp_mtn_thd

Table 10-1143 DIPD_COMB_CTRL6 0x2feb

Bit(s)	R/W	Default	Description
21	Rw	0	Reg_edit_sel
20	Rw	1	Reg_horflt_en
16-12	Rw	7	Reg_combseglen
9-4	Rw	6	Reg_trancombrat
3-0	Rw	4	Reg_combsegmin

Table 10-1144 DI_PD_GRAD_CTRL 0x17e0

Bit(s)	R/W	Default	Description
11:4	R/W	255	Reg_fd_min_grad_th
3	R/W	1	Reg_fd_min_grad_th_adjust_en
2	R/W	1	Reg_fd_err_grad_bf_flt_en
1	R/W	0	Reg_fd_comb_field_sel
0	R/W	0	Reg_fd_iscur_top_inver

Table 10-1145 DI_PD_GRAD_TH_P 0x17e1

Bit(s)	R/W	Default	Description
31-24	R/W	2	Reg_fd_min_grad_th_p0
23-16	R/W	4	Reg_fd_min_grad_th_p1
15-8	R/W	8	Reg_fd_min_grad_th_p2
7-0	R/W	12	Reg_fd_min_grad_th_p3

Amlogic Proprietary and Confidential
Copyright © Amlogic. All rights reserved.

Table 10-1146 DI_PD_GRAD_TH_N 0x17e2

Bit(s)	R/W	Default	Description
31-24	R/W	4	Reg_fd_min_grad_th_n0
23-16	R/W	8	Reg_fd_min_grad_th_n1
15-8	R/W	16	Reg_fd_min_grad_th_n2
7-0	R/W	32	Reg_fd_min_grad_th_n3

Table 10-1147 DI_PD_GRAD_GAIN_P 0x17e3

Bit(s)	R/W	Default	Description
28-24	R/W	16	Reg_fd_min_grad_gain_p0
20-16	R/W	16	Reg_fd_min_grad_gain_p1
12-8	R/W	16	Reg_fd_min_grad_gain_p2
4-0	R/W	16	Reg_fd_min_grad_gain_p3

Table 10-1148 DI_PD_GRAD_GAIN_N 0x17e4

Bit(s)	R/W	Default	Description
28-24	R/W	12	Reg_fd_min_grad_gain_n0
20-16	R/W	12	Reg_fd_min_grad_gain_n1
12-8	R/W	14	Reg_fd_min_grad_gain_n2
4-0	R/W	15	Reg_fd_min_grad_gain_n3

Table 10-1149 DI_PD_RO_SUM_P_WIN0 0x17e5

Bit(s)	R/W	Default	Description
31-0	R		Ro_fd_err_grad_sum_p0

Table 10-1150 DI_PD_RO_SUM_P_WIN1 0x17e6

Bit(s)	R/W	Default	Description
31-0	R		Ro_fd_err_grad_sum_p1

Table 10-1151 DI_PD_RO_SUM_P_WIN2 0x17e7

Bit(s)	R/W	Default	Description
31-0	R		Ro_fd_err_grad_sum_p2

Amlogic Proprietary and Confidential
Copyright © Amlogic. All rights reserved.

Table 10-1152 DI_PD_RO_SUM_P_WIN3 0x17e8

Bit(s)	R/W	Default	Description
31-0	R		Ro_fd_err_grad_sum_p3

Table 10-1153 DI_PD_RO_SUM_P_WIN4 0x17e9

Bit(s)	R/W	Default	Description
31-0	R		Ro_fd_err_grad_sum_p4

Table 10-1154 DI_PD_RO_SUM_N_WIN0 0x17ea

Bit(s)	R/W	Default	Description
31-0	R		Ro_fd_err_grad_sum_n0

Table 10-1155 DI_PD_RO_SUM_N_WIN1 0x17eb

Bit(s)	R/W	Default	Description
31-0	R		Ro_fd_err_grad_sum_n1

Table 10-1156 DI_PD_RO_SUM_N_WIN2 0x17ec

Bit(s)	R/W	Default	Description
31-0	R		Ro_fd_err_grad_sum_n2

Table 10-1157 DI_PD_RO_SUM_N_WIN3 0x17ed

Bit(s)	R/W	Default	Description
31-0	R		Ro_fd_err_grad_sum_n3

Table 10-1158 DI_PD_RO_SUM_N_WIN4 0x17ee

Bit(s)	R/W	Default	Description
31-0	R		Ro_fd_err_grad_sum_n4

Table 10-1159 DI_PD_RO_CNT_P_WIN0 0x17ef

Bit(s)	R/W	Default	Description
20-0	R		Ro_fd_err_grad_cnt_p0

Table 10-1160 DI_PD_RO_CNT_P_WIN1 0x17f0

Bit(s)	R/W	Default	Description
20-0	R		Ro_fd_err_grad_cnt_p1

Amlogic Proprietary and Confidential
Copyright © Amlogic. All rights reserved.

Table 10-1161 DI_PD_RO_CNT_P_WIN2 0x17f1

Bit(s)	R/W	Default	Description
20-0	R		Ro_fd_err_grad_cnt_p2

Table 10-1162 DI_PD_RO_CNT_P_WIN3 0x17f2

Bit(s)	R/W	Default	Description
20-0	R		Ro_fd_err_grad_cnt_p3

Table 10-1163 DI_PD_RO_CNT_P_WIN4 0x17f3

Bit(s)	R/W	Default	Description
20-0	R		Ro_fd_err_grad_cnt_p4

Table 10-1164 DI_PD_RO_CNT_N_WIN0 0x17f4

Bit(s)	R/W	Default	Description
20-0	R		Ro_fd_err_grad_cnt_n0

Table 10-1165 DI_PD_RO_CNT_N_WIN1 0x17f5

Bit(s)	R/W	Default	Description
20-0	R		Ro_fd_err_grad_cnt_n1

Table 10-1166 DI_PD_RO_CNT_N_WIN2 0x17f6

Bit(s)	R/W	Default	Description
20-0	R		Ro_fd_err_grad_cnt_n2

Table 10-1167 DI_PD_RO_CNT_N_WIN3 0x17f7

Bit(s)	R/W	Default	Description
20-0	R		Ro_fd_err_grad_cnt_n3

Table 10-1168 DI_PD_RO_CNT_N_WIN4 0x17f8

Bit(s)	R/W	Default	Description
20-0	R		Ro_fd_err_grad_cnt_n4

Amlogic Proprietary and Confidential
Copyright © Amlogic. All rights reserved.

Table 10-1169 DI_PD_RO_SUM_P 0x17f9

Bit(s)	R/W	Default	Description
31-0	R		Ro_fd_err_grad_sum_p_glb

Table 10-1170 DI_PD_RO_SUM_N 0x17fa

Bit(s)	R/W	Default	Description
31-0	R		Ro_fd_err_grad_sum_n_glb

Table 10-1171 DI_PD_RO_CNT_P 0x17fb

Bit(s)	R/W	Default	Description
20-0	R		Ro_fd_err_grad_cnt_p_glb

Table 10-1172 DI_PD_RO_CNT_N 0x17fc

Bit(s)	R/W	Default	Description
20-0	R		Ro_fd_err_grad_cnt_n_glb

10.2.3.15 DNR Registers

Register Address

- DNR_CTRL 0xff00b400
- DNR_HVSIZE 0xff00b404
- DNR_DBLK_BLANK_NUM 0xff00b408
- DNR_BLK_OFFST 0xff00b40c
- DNR_GBS 0xff00b410
- DNR_HBOFFST_STAT 0xff00b414
- DNR_VBOFFST_STAT 0xff00b418
- DNR_GBS_STAT 0xff00b41c
- DNR_STAT_X_START_END 0xff00b420
- DNR_STAT_Y_START_END 0xff00b424
- DNR_LUMA 0xff00b428
- DNR_DB_YEDGE_THD 0xff00b42c
- DNR_DB_CEDGE_THD 0xff00b430
- DNR_DB_HGAP 0xff00b434
- DNR_DB_HBS 0xff00b438
- DNR_DB_HACT 0xff00b43c
- DNR_DB_YHDELTA_GAIN 0xff00b440
- DNR_DB_YHDELTA2_GAIN 0xff00b444
- DNR_DB_CHDELTA_GAIN 0xff00b448
- DNR_DB_CHDELTA2_GAIN 0xff00b44c

Amlogic Proprietary and Confidential
Copyright © Amlogic. All rights reserved.

- DNR_DB_YC_VEDGE_THD 0xff00b450
- DNR_DB_VBS_MISC 0xff00b454
- DNR_DB_YVDELTA_GAIN 0xff00b458
- DNR_DB_CVDELTA_GAIN 0xff00b45c
- DNR_RO_GBS_STAT_LR 0xff00b460
- DNR_RO_GBS_STAT_LL 0xff00b464
- DNR_RO_GBS_STAT_RR 0xff00b468
- DNR_RO_GBS_STAT_DIF 0xff00b46c
- DNR_RO_GBS_STAT_CNT 0xff00b470
- DNR_RO_HBOF_STAT_CNT_0 0xff00b474
- DNR_RO_HBOF_STAT_CNT_1 0xff00b478
- DNR_RO_HBOF_STAT_CNT_2 0xff00b47c
- DNR_RO_HBOF_STAT_CNT_3 0xff00b480
- DNR_RO_HBOF_STAT_CNT_4 0xff00b484
- DNR_RO_HBOF_STAT_CNT_5 0xff00b488
- DNR_RO_HBOF_STAT_CNT_6 0xff00b48c
- DNR_RO_HBOF_STAT_CNT_7 0xff00b490
- DNR_RO_HBOF_STAT_CNT_8 0xff00b494
- DNR_RO_HBOF_STAT_CNT_9 0xff00b498
- DNR_RO_HBOF_STAT_CNT_10 0xff00b49c
- DNR_RO_HBOF_STAT_CNT_11 0xff00b4a0
- DNR_RO_HBOF_STAT_CNT_12 0xff00b4a4
- DNR_RO_HBOF_STAT_CNT_13 0xff00b4a8
- DNR_RO_HBOF_STAT_CNT_14 0xff00b4ac
- DNR_RO_HBOF_STAT_CNT_15 0xff00b4b0
- DNR_RO_HBOF_STAT_CNT_16 0xff00b4b4
- DNR_RO_HBOF_STAT_CNT_17 0xff00b4b8
- DNR_RO_HBOF_STAT_CNT_18 0xff00b4bc
- DNR_RO_HBOF_STAT_CNT_19 0xff00b4c0
- DNR_RO_HBOF_STAT_CNT_20 0xff00b4c4
- DNR_RO_HBOF_STAT_CNT_21 0xff00b4c8
- DNR_RO_HBOF_STAT_CNT_22 0xff00b4cc
- DNR_RO_HBOF_STAT_CNT_23 0xff00b4d0
- DNR_RO_HBOF_STAT_CNT_24 0xff00b4d4
- DNR_RO_HBOF_STAT_CNT_25 0xff00b4d8
- DNR_RO_HBOF_STAT_CNT_26 0xff00b4dc
- DNR_RO_HBOF_STAT_CNT_27 0xff00b4e0
- DNR_RO_HBOF_STAT_CNT_28 0xff00b4e4
- DNR_RO_HBOF_STAT_CNT_29 0xff00b4e8
- DNR_RO_HBOF_STAT_CNT_30 0xff00b4ec
- DNR_RO_HBOF_STAT_CNT_31 0xff00b4f0
- DNR_RO_VBOF_STAT_CNT_0 0xff00b4f4
- DNR_RO_VBOF_STAT_CNT_1 0xff00b4f8
- DNR_RO_VBOF_STAT_CNT_2 0xff00b4fc

Amlogic Proprietary and Confidential
Copyright © Amlogic. All rights reserved.

- DNR_RO_VBOF_STAT_CNT_3 0xff00b500
- DNR_RO_VBOF_STAT_CNT_4 0xff00b504
- DNR_RO_VBOF_STAT_CNT_5 0xff00b508
- DNR_RO_VBOF_STAT_CNT_6 0xff00b50c
- DNR_RO_VBOF_STAT_CNT_7 0xff00b510
- DNR_RO_VBOF_STAT_CNT_8 0xff00b514
- DNR_RO_VBOF_STAT_CNT_9 0xff00b518
- DNR_RO_VBOF_STAT_CNT_10 0xff00b51c
- DNR_RO_VBOF_STAT_CNT_11 0xff00b520
- DNR_RO_VBOF_STAT_CNT_12 0xff00b524
- DNR_RO_VBOF_STAT_CNT_13 0xff00b528
- DNR_RO_VBOF_STAT_CNT_14 0xff00b52c
- DNR_RO_VBOF_STAT_CNT_15 0xff00b530
- DNR_RO_VBOF_STAT_CNT_16 0xff00b534
- DNR_RO_VBOF_STAT_CNT_17 0xff00b538
- DNR_RO_VBOF_STAT_CNT_18 0xff00b53c
- DNR_RO_VBOF_STAT_CNT_19 0xff00b540
- DNR_RO_VBOF_STAT_CNT_20 0xff00b544
- DNR_RO_VBOF_STAT_CNT_21 0xff00b548
- DNR_RO_VBOF_STAT_CNT_22 0xff00b54c
- DNR_RO_VBOF_STAT_CNT_23 0xff00b550
- DNR_RO_VBOF_STAT_CNT_24 0xff00b554
- DNR_RO_VBOF_STAT_CNT_25 0xff00b558
- DNR_RO_VBOF_STAT_CNT_26 0xff00b55c
- DNR_RO_VBOF_STAT_CNT_27 0xff00b560
- DNR_RO_VBOF_STAT_CNT_28 0xff00b564
- DNR_RO_VBOF_STAT_CNT_29 0xff00b568
- DNR_RO_VBOF_STAT_CNT_30 0xff00b56c
- DNR_RO_VBOF_STAT_CNT_31 0xff00b570
- DNR_DM_ADP_EN 0xff00b574
- DNR_DM_EDGE_DIR 0xff00b578
- DNR_DM_CTRL 0xff00b580
- DNR_DM_NR_BLND 0xff00b584
- DNR_DM_RNG_THD 0xff00b588
- DNR_DM_RNG_GAIN_OFST 0xff00b58c
- DNR_DM_DIR_MISC 0xff00b590
- DNR_DM_COR_DIF 0xff00b594
- DNR_DM_FLT_THD 0xff00b598
- DNR_DM_VAR_THD 0xff00b59c
- DNR_DM_EDGE_DIF_THD 0xff00b5a0
- DNR_DM_AVG_THD 0xff00b5a4
- DNR_DM_AVG_VAR_DIF_THD 0xff00b5a8
- DNR_DM_VAR_EDGE_DIF_THD2 0xff00b5ac
- DNR_DM_DIF_FLT_MISC 0xff00b5b0

Amlogic Proprietary and Confidential
Copyright © Amlogic. All rights reserved.

- DNR_DM_SDIF_LUT0_2 0xff00b5b4
- DNR_DM_SDIF_LUT3_5 0xff00b5b8
- DNR_DM_SDIF_LUT6_8 0xff00b5bc
- DNR_DM_LDIF_LUT0_2 0xff00b5c0
- DNR_DM_LDIF_LUT3_5 0xff00b5c4
- DNR_DM_LDIF_LUT6_8 0xff00b5c8
- DNR_DM_DIF2NORM_LUT0_2 0xff00b5cc
- DNR_DM_DIF2NORM_LUT3_5 0xff00b5d0
- DNR_DM_DIF2NORM_LUT6_8 0xff00b5d4
- DNR_DM_GMS_THD 0xff00b5d8
- DNR_RO_DM_GMS_STAT_CNT 0xff00b5dc
- DNR_RO_DM_GMS_STAT_MS 0xff00b5e0
- DNR_DM_EDGE_GAIN 0xff00b5e4
- DNR_DM_FLG_BDIF 0xff00b5e8
- DNR_DM_GBS_RORM 0xff00b5ec
- DNR_DM_FLG_LEV 0xff00b5f0
- DNR_DM_DIF_FLG_TH 0xff00b5f4
- DNR_DM_CALP_GAIN_OFST 0xff00b5f8
- DECOMB_DET_VERT_CON0 0xff00b600
- DECOMB_DET_VERT_CON1 0xff00b604
- DECOMB_DET_EDGE_CON0 0xff00b608
- DECOMB_DET_EDGE_CON1 0xff00b60c
- DECOMB_PARA 0xff00b610
- DECOMB_BLND_CON0 0xff00b614
- DECOMB_BLND_CON1 0xff00b618
- DECOMB_YC_THRD 0xff00b61c
- DECOMB_MTN_GAIN_OFST 0xff00b620
- DECOMB_CMB_SEL_GAIN_OFST 0xff00b624
- DECOMB_WIND00 0xff00b628
- DECOMB_WIND01 0xff00b62c
- DECOMB_WIND10 0xff00b630
- DECOMB_WIND11 0xff00b634
- DECOMB_MODE 0xff00b638
- DECOMB_FRM_SIZE 0xff00b63c
- DECOMB_HV_BLANK 0xff00b640
- NR2_POLAR3_MODE 0xff00b660
- NR2_POLAR3_THRD 0xff00b664
- NR2_POLAR3_PARA0 0xff00b668
- NR2_POLAR3_PARA1 0xff00b66c
- NR2_POLAR3_CTRL 0xff00b670
- NR2_RO_POLAR3_NUMOFPIX 0xff00b674
- NR2_RO_POLAR3_SMOOTHMV 0xff00b678
- NR2_RO_POLAR3_M1 0xff00b67c
- NR2_RO_POLAR3_P1 0xff00b680

Amlogic Proprietary and Confidential
Copyright © Amlogic. All rights reserved.

- NR2_RO_POLAR3_M2 0xff00b684
- NR2_RO_POLAR3_P2 0xff00b688
- NR2_RO_POLAR3_32 0xff00b68c
- NR4_DRT_CTRL 0xff00b690
- NR4_DRT_YSAD_GAIN 0xff00b694
- NR4_DRT_CSAD_GAIN 0xff00b698
- NR4_DRT_SAD_ALP_CORE 0xff00b69c
- NR4_DRT_ALP_MINMAX 0xff00b6a0
- NR4_SNR_CTRL_REG 0xff00b6a4
- NR4_SNR_ALPHA0_MAX_MIN 0xff00b6a8
- NR4_ALP0C_ERR2CURV_LIMIT0 0xff00b6ac
- NR4_ALP0C_ERR2CURV_LIMIT1 0xff00b6b0
- NR4_ALP0Y_ERR2CURV_LIMIT0 0xff00b6b4
- NR4_ALP0Y_ERR2CURV_LIMIT1 0xff00b6b8
- NR4_SNR_ALPA1_RATE_AND_OFST 0xff00b6bc
- NR4_SNR_ALPHA1_MAX_MIN 0xff00b6c0
- NR4_ALP1C_ERR2CURV_LIMIT0 0xff00b6c4
- NR4_ALP1C_ERR2CURV_LIMIT1 0xff00b6c8
- NR4_ALP1Y_ERR2CURV_LIMIT0 0xff00b6cc
- NR4_ALP1Y_ERR2CURV_LIMIT1 0xff00b6d0
- NR4_MTN_CTRL 0xff00b6d4
- NR4_MTN_REF_PAR0 0xff00b6d8
- NR4_MTN_REF_PAR1 0xff00b6dc
- NR4_MCNR_LUMA_ENH_CTRL 0xff00b6e0
- NR4_MCNR_LUMA_STAT_LIMTX 0xff00b6e4
- NR4_MCNR_LUMA_STAT_LIMTY 0xff00b6e8
- NR4_MCNR_LUMA_DIF_CALC 0xff00b6ec
- NR4_MCNR_LUMAPRE_CAL_PRAM 0xff00b6f0
- NR4_MCNR_LUMACUR_CAL_PRAM 0xff00b6f4
- NR4_MCNR_MV_CTRL_REG 0xff00b6f8
- NR4_MCNR_MV_GAIN0 0xff00b6fc
- NR4_MCNR_LMV_PARM 0xff00b700
- NR4_MCNR_ALP0_REG 0xff00b704
- NR4_MCNR_ALP1_AND_BET0_REG 0xff00b708
- NR4_MCNR_BET1_AND_BET2_REG 0xff00b70c
- NR4_MCNR_AC_DC_CRTL 0xff00b710
- NR4_MCNR_CM_CTRL0 0xff00b714
- NR4_MCNR_CM_PRAM 0xff00b718
- NR4_MCNR_CM_RSHFT_ALP0 0xff00b71c
- NR4_MCNR_BLUE_CENT 0xff00b720
- NR4_MCNR_BLUE_GAIN_PAR0 0xff00b724
- NR4_MCNR_BLUE_GAIN_PAR1 0xff00b728
- NR4_MCNR_CM_BLUE_CLIP0 0xff00b72c
- NR4_MCNR_CM_BLUE_CLIP1 0xff00b730

Amlogic Proprietary and Confidential
Copyright © Amlogic. All rights reserved.

- NR4_MCNR_GREEN_CENT 0xff00b734
- NR4_MCNR_GREEN_GAIN_PAR0 0xff00b738
- NR4_MCNR_GREEN_GAIN_PAR1 0xff00b73c
- NR4_MCNR_GREEN_CLIP0 0xff00b740
- NR4_MCNR_GREEN_CLIP2 0xff00b744
- NR4_MCNR_SKIN_CENT 0xff00b748
- NR4_MCNR_SKIN_GAIN_PAR0 0xff00b74c
- NR4_MCNR_SKIN_GAIN_PAR1 0xff00b750
- NR4_MCNR_SKIN_CLIP0 0xff00b754
- NR4_MCNR_SKIN_CLIP1 0xff00b758
- NR4_MCNR_ALP1_GLB_CTRL 0xff00b75c
- NR4_MCNR_DC2NORM_LUT0 0xff00b760
- NR4_MCNR_DC2NORM_LUT1 0xff00b764
- NR4_MCNR_DC2NORM_LUT2 0xff00b768
- NR4_MCNR_AC2NORM_LUT0 0xff00b76c
- NR4_MCNR_AC2NORM_LUT1 0xff00b770
- NR4_MCNR_AC2NORM_LUT2 0xff00b774
- NR4_MCNR_SAD2ALP0_LUT0 0xff00b778
- NR4_MCNR_SAD2ALP0_LUT1 0xff00b77c
- NR4_MCNR_SAD2ALP0_LUT2 0xff00b780
- NR4_MCNR_SAD2ALP0_LUT3 0xff00b784
- NR4_MCNR_SAD2ALP1_LUT0 0xff00b788
- NR4_MCNR_SAD2ALP1_LUT1 0xff00b78c
- NR4_MCNR_SAD2ALP1_LUT2 0xff00b790
- NR4_MCNR_SAD2ALP1_LUT3 0xff00b794
- NR4_MCNR_SAD2BET0_LUT0 0xff00b798
- NR4_MCNR_SAD2BET0_LUT1 0xff00b79c
- NR4_MCNR_SAD2BET0_LUT2 0xff00b7a0
- NR4_MCNR_SAD2BET0_LUT3 0xff00b7a4
- NR4_MCNR_SAD2BET1_LUT0 0xff00b7a8
- NR4_MCNR_SAD2BET1_LUT1 0xff00b7ac
- NR4_MCNR_SAD2BET1_LUT2 0xff00b7b0
- NR4_MCNR_SAD2BET1_LUT3 0xff00b7b4
- NR4_MCNR_SAD2BET2_LUT0 0xff00b7b8
- NR4_MCNR_SAD2BET2_LUT1 0xff00b7bc
- NR4_MCNR_SAD2BET2_LUT2 0xff00b7c0
- NR4_MCNR_SAD2BET2_LUT3 0xff00b7c4
- NR4_MCNR_RO_U_SUM 0xff00b7c8
- NR4_MCNR_RO_V_SUM 0xff00b7cc
- NR4_MCNR_RO_GRDU_SUM 0xff00b7d0
- NR4_MCNR_RO_GRDV_SUM 0xff00b7d4
- NR4_TOP_CTRL 0xff00b7fc
- NR4_MCNR_SAD_GAIN 0xff00dc00
- NR4_MCNR_LPF_CTRL 0xff00dc04

Amlogic Proprietary and Confidential
Copyright © Amlogic. All rights reserved.

- NR4_MCNR_BLD_VS3LUT0 0xff00dc08
- NR4_MCNR_BLD_VS3LUT1 0xff00dc0c
- NR4_MCNR_BLD_VS3LUT2 0xff00dc10
- NR4_MCNR_BLD_VS2LUT0 0xff00dc14
- NR4_MCNR_BLD_VS2LUT1 0xff00dc18
- NR4_COEFBLT_LUT10 0xff00dc1c
- NR4_COEFBLT_LUT11 0xff00dc20
- NR4_COEFBLT_LUT12 0xff00dc24
- NR4_COEFBLT_LUT20 0xff00dc28
- NR4_COEFBLT_LUT21 0xff00dc2c
- NR4_COEFBLT_LUT22 0xff00dc30
- NR4_COEFBLT_LUT30 0xff00dc34
- NR4_COEFBLT_LUT31 0xff00dc38
- NR4_COEFBLT_LUT32 0xff00dc3c
- NR4_COEFBLT_CONV 0xff00dc40
- NR4_DBGWIN_YX0 0xff00dc44
- NR4_DBGWIN_YX1 0xff00dc48
- NR4_NM_X_CFG 0xff00dc4c
- NR4_NM_Y_CFG 0xff00dc50
- NR4_NM_SAD_THD 0xff00dc54
- NR4_MCNR_BANDSPLIT_PRAM 0xff00dc58
- NR4_MCNR_ALP1_SGN_COR 0xff00dc5c
- NR4_MCNR_ALP1_SGN_PRAM 0xff00dc60
- NR4_MCNR_ALP1_MVX_LUT1 0xff00dc64
- NR4_MCNR_ALP1_MVX_LUT2 0xff00dc68
- NR4_MCNR_ALP1_MVX_LUT3 0xff00dc6c
- NR4_MCNR_ALP1_LP_PRAM 0xff00dc70
- NR4_MCNR_ALP1_SGN_LUT1 0xff00dc74
- NR4_MCNR_ALP1_SGN_LUT2 0xff00dc78
- NR4_RO_NM_SAD_SUM 0xff00dc7c
- NR4_RO_NM_SAD_CNT 0xff00dc80
- NR4_RO_NM_VAR_SUM 0xff00dc84
- NR4_RO_NM_VAR_SCNT 0xff00dc88
- NR4_RO_NM_VAR_MIN_MAX 0xff00dc8c
- NR4_RO_NR4_DBGPIX_NUM 0xff00dc90
- NR4_RO_NR4_BLDVS2_SUM 0xff00dc94
- NR4_BLDVS3_SUM 0xff00dc98
- NR4_COEF12_SUM 0xff00dc9c
- NR4_COEF123_SUM 0xff00dca0
- XLR_CTRL 0xff00dcc0
- XLR_THRD 0xff00dcc4
- XLR_HCT_THRD 0xff00dcc8
- NR_DB_FLT_CTRL 0xff00dce0
- NR_DB_FLT_YC_THRD 0xff00dce4

Amlogic Proprietary and Confidential
Copyright © Amlogic. All rights reserved.

- NR_DB_FLT_RANDLUT 0xff00dce8
- NR_DB_FLT_PXI_THRD 0xff00dcec
- NR_DB_FLT_SEED_Y 0xff00dcf0
- NR_DB_FLT_SEED_U 0xff00dcf4
- NR_DB_FLT_SEED_V 0xff00dcf8
- NR_DB_FLT_SEED3 0xff00dcfc
- NRWR_DBG_AXI_CMD_CNT 0xff008240
- NRWR_DBG_AXI_DAT_CNT 0xff008244
- DI_NRWR_CANVAS 0xff008248
- DI_NRWR_URGENT 0xff00824c
- DI_NRWR_X 0xff008250
- DI_NRWR_Y 0xff008254
- DI_NRWR_CTRL 0xff008258
- DI_NRWR_SHRK_CTRL 0xff00825c
- DI_NRWR_SHRK_SIZE 0xff008260
- DI_NRWR_CROP_CTRL 0xff008268
- DI_NRWR_CROP_DIMM_CTRL 0xff00826c
- DI_NRWR_CROP_SIZE_IN 0xff008270
- DI_NRWR_CROP_HSCOPE 0xff008274
- DI_NRWR_CROP_VSCOPE 0xff008278
- DIWR_DBG_AXI_CMD_CNT 0xff0083c0
- DIWR_DBG_AXI_DAT_CNT 0xff0083c4
- DI_DIWR_CANVAS 0xff0083c8
- DI_DIWR_URGENT 0xff0083cc
- DI_DIWR_X 0xff0083d0
- DI_DIWR_Y 0xff0083d4
- DI_DIWR_CTRL 0xff0083d8
- DI_DIWR_SHRK_CTRL 0xff0083dc
- DI_DIWR_SHRK_SIZE 0xff0083e0
- DI_DIWR_CROP_CTRL 0xff0083e8
- DI_DIWR_CROP_DIMM_CTRL 0xff0083ec
- DI_DIWR_CROP_SIZE_IN 0xff0083f0
- DI_DIWR_CROP_HSCOPE 0xff0083f4
- DI_DIWR_CROP_VSCOPE 0xff0083f8

Register Description

Table 10-1173 DNR_CTRL 0x2d00

Bit(s)	R/W	Default	Description
31:20	R/W		reserved
19	R/W		reg_dnr_bufctrl, deblock linebuf control, 0 : 3line 1: 5line, default =1
18	R/W		reg_dnr_dm_bufctrl, demosquito linebuf control, 0 : 3line 1: 5line, default =1
16	R/W		reg_dnr_en
15	R/W		reg_dnr_db_vdbstep, vdb step, 0: 4, 1: 8 . unsigned, default = 1

Amlogic Proprietary and Confidential
Copyright © Amlogic. All rights reserved.

Bit(s)	R/W	Default	Description
14	R/W		reg_dnr_db_vdbprten, vdb protection enable . unsigned, default = 1
13	R/W		reg_dnr_gbs_difen , enable dif (between LR and LL/RR) condition for gbs stat.. unsigned, default = 0
12	R/W		reg_dnr_luma_en, enable ycbcr2luma module . unsigned, default = 1
11:10	R/W		reg_dnr_db_mod , deblocking mode, 0: disable, 1: horizontal deblocking, 2: vertical deblocking, 3: horizontal & vertical deblocking. unsigned, default = 3
9	R/W		reg_dnr_db_chrmen , enable chroma deblocking . unsigned, default = 1
8	R/W		reg_dnr_hvdif_mod , 0: calc. difs by original Y, 1: by new luma. unsigned, default = 1
7	R/W		reserved
6: 4	R/W		reg_dnr_demo_lften, b0: Y b1:U b2:V. unsigned, default = 7
3	R/W		reserved
2: 0	R/W		reg_dnr_demo_rgten, b0: Y b1:U b2:V. unsigned, default = 7

Table 10-1174 DNR_HVSIZE 0x2d01

Bit(s)	R/W	Default	Description
31:29	R/W		reserved
28:16	R/W		reg_dnr_hsize , hsize . unsigned, default = 0
15:13	R/W		reserved
12: 0	R/W		reg_dnr_vsize , vsize . unsigned, default = 0

Table 10-1175 DNR_DBLK_BLANK_NUM 0x2d02

Bit(s)	R/W	Default	Description
31:16	R/W		reserved
15: 8	R/W		reg_dblk_hblank_num, deblock hor blank num . unsigned, default = 16
7: 0	R/W		reg_dblk_vblank_num, deblock ver blank num . unsigned, default = 45

Table 10-1176 DNR_BLK_OFFST 0x2d03

Bit(s)	R/W	Default	Description
31: 7	R/W		reserved
6: 4	R/W		reg_dnr_hbofst , horizontal block offset may provide by software calc.. unsigned, default = 0
3	R/W		reserved
2: 0	R/W		reg_dnr_vbofst , vertical block offset may provide by software calc.. unsigned, default = 0

Amlogic Proprietary and Confidential
Copyright © Amlogic. All rights reserved.

Table 10-1177 DNR_GBS 0x2d04

Bit(s)	R/W	Default	Description
31: 2	R/W		reserved
1: 0	R/W		reg_dnr_gbs , global block strength may update by software calc.. unsigned, default = 0

Table 10-1178 DNR_HBOFFST_STAT 0x2d05

Bit(s)	R/W	Default	Description
31:24	R/W		reg_dnr_hbof_difthd, dif threshold (>=) between LR and LL/RR. unsigned, default = 2
23:16	R/W		reg_dnr_hbof_edgethd , edge threshold (<=) for LR . unsigned, default = 32
15: 8	R/W		reg_dnr_hbof_flatthd , flat threshold (>=) for LR . unsigned, default = 0
7	R/W		reserved
6: 4	R/W		reg_dnr_hbof_delta, delta for weighted bin accumulator. unsigned, default = 1
3	R/W		reserved
2: 0	R/W		reg_dnr_hbof_statmod , statistic mode for horizontal block offset, 0: count flags for 8-bin, 1: count LRs for 8-bin, 2: count difs for 8-bin, 3: count weighted flags for 8-bin, 4: count flags for first 32-bin, 5: count LRs for first 32-bin, 6 or 7: count difs for first 32-bin. unsigned, default = 2

Table 10-1179 DNR_VBOFFST_STAT 0x2d06

Bit(s)	R/W	Default	Description
31:24	R/W		reg_dnr_vbof_difthd, dif threshold (>=) between Up and Dw. unsigned, default = 1
23:16	R/W		reg_dnr_vbof_edgethd , edge threshold (<=) for Up/Dw. unsigned, default = 16
15: 8	R/W		reg_dnr_vbof_flatthd , flat threshold (>=) for Up/Dw. unsigned, default = 0
7	R/W		reserved
6: 4	R/W		reg_dnr_vbof_delta, delta for weighted bin accumulator. unsigned, default = 1
3	R/W		reserved
2: 0	R/W		reg_dnr_vbof_statmod , statistic mode for vertical block offset, 0: count flags for 8-bin, 1: count Ups for 8-bin, 2: count difs for 8-bin, 3: count weighted flags for 8-bin, 4: count flags for first 32-bin, 5: count Ups for first 32-bin, 6 or 7: count difs for first 32-bin. unsigned, default = 2

Table 10-1180 DNR_GBS_STAT 0x2d07

Bit(s)	R/W	Default	Description
31:24	R/W		reg_dnr_gbs_edgethd, edge threshold (<=) for LR . unsigned, default = 32
23:16	R/W		reg_dnr_gbs_flatthd, flat threshold (>=) for LR . unsigned, default = 0
15: 8	R/W		reg_dnr_gbs_varthd, variation threshold (<=) for Lvar/Rvar. unsigned, default = 16
7: 0	R/W		reg_dnr_gbs_difthd, dif threshold (>=) between LR and LL/RR. unsigned, default = 2

Amlogic Proprietary and Confidential
Copyright © Amlogic. All rights reserved.

Table 10-1181 DNR_STAT_X_START_END 0x2d08

Bit(s)	R/W	Default	Description
31:30	R/W		reserved
29:16	R/W		reg_dnr_stat_xst . unsigned, default = 24
15:14	R/W		reserved
13: 0	R/W		reg_dnr_stat_xed . unsigned, default = HSIZE - 25

Table 10-1182 DNR_STAT_Y_START_END 0x2d09

Bit(s)	R/W	Default	Description
31:30	R/W		reserved
29:16	R/W		reg_dnr_stat_yst . unsigned, default = 24
15:14	R/W		reserved
13: 0	R/W		reg_dnr_stat_yed . unsigned, default = VSIZE - 25

Table 10-1183 DNR_LUMA 0x2d0a

Bit(s)	R/W	Default	Description
31:27	R/W		reserved
28	R/W		Reg_dnr_luma_mode, ycbcr2luma mode selection, default =0
26:24	R/W		reg_dnr_luma_sqrtshft , left shift for fast squart of chroma, [0, 4]. unsigned, default = 2
23:21	R/W		reserved
20:16	R/W		reg_dnr_luma_sqrtoffst, offset for fast squart of chroma. signed, default = 0
15	R/W		reserved
14:12	R/W		reg_dnr_luma_wcmod, theta related to warm/cool segment line, 0: 0, 1: 45, 2: 90, 3: 135, 4: 180, 5: 225, 6: 270, 7: 315. . unsigned, default = 3
11: 8	R/W		reg_dnr_luma_cshft, shift for calc. delta part, 0~8, . unsigned, default = 8
7: 6	R/W		reserved
5: 0	R/W		reg_dnr_luma_cgain, final gain for delta part, 32 normalized to "1". unsigned, default = 4

Table 10-1184 DNR_DB_YEDGE_THD 0x2d0b

Bit(s)	R/W	Default	Description
31:24	R/W		reg_dnr_db_yedgethd0 , edge threshold0 for luma . unsigned, default = 12
23:16	R/W		reg_dnr_db_yedgethd1 , edge threshold1 for luma . unsigned, default = 15
15: 8	R/W		reg_dnr_db_yedgethd2 , edge threshold2 for luma . unsigned, default = 18
7: 0	R/W		reg_dnr_db_yedgethd3 , edge threshold3 for luma . unsigned, default = 25

Amlogic Proprietary and Confidential
Copyright © Amlogic. All rights reserved.

Table 10-1185 DNR_DB_CEDGE_THD 0x2d0c

Bit(s)	R/W	Default	Description
31:24	R/W		reg_dnr_db_cedgethd0 , edge threshold0 for chroma . unsigned, default = 12
23:16	R/W		reg_dnr_db_cedgethd1 , edge threshold1 for chroma . unsigned, default = 15
15: 8	R/W		reg_dnr_db_cedgethd2 , edge threshold2 for chroma . unsigned, default = 18
7: 0	R/W		reg_dnr_db_cedgethd3 , edge threshold3 for chroma . unsigned, default = 25

Table 10-1186 DNR_DB_HGAP 0x2d0d

Bit(s)	R/W	Default	Description
31:24	R/W		reserved
23:16	R/W		reg_dnr_db_hgapthd, horizontal gap thd (<=) for very sure blockiness . unsigned, default = 8
15: 8	R/W		reg_dnr_db_hgapdifthd , dif thd between hgap and lft/rgt hdifs. unsigned, default = 1
7: 1	R/W		reserved
0	R/W		reg_dnr_db_hgapmod, horizontal gap calc. mode, 0: just use current col x, 1: find max between (x-1, x, x+1) . unsigned, default = 0

Table 10-1187 DNR_DB_HBS 0x2d0e

Bit(s)	R/W	Default	Description
31: 6	R/W		reserved
5: 4	R/W		reg_dnr_db_hbsup , horizontal bs up value . unsigned, default = 1
3: 2	R/W		reg_dnr_db_hbsmax , max value of hbs for global control. unsigned, default = 3
1: 0	R/W		reg_dnr_db_hgbsthd, gbs thd (>=) for hbs calc. . unsigned, default = 1

Table 10-1188 DNR_DB_HACT 0x2d0f

Bit(s)	R/W	Default	Description
31:16	R/W		reserved
15: 8	R/W		reg_dnr_db_hactthd0, thd0 of hact, for block classification. unsigned, default = 10
7: 0	R/W		reg_dnr_db_hactthd1, thd1 of hact, for block classification. unsigned, default = 32

Table 10-1189 DNR_DB_YHDELTA_GAIN 0x2d10

Bit(s)	R/W	Default	Description
31:27	R/W		reserved
26:24	R/W		reg_dnr_db_yhdeltagain1, (p1-q1) gain for Y's delta calc. when bs=1, normalized 8 as "1" . unsigned, default = 2
23	R/W		reserved

Amlogic Proprietary and Confidential
Copyright © Amlogic. All rights reserved.

Bit(s)	R/W	Default	Description
22:20	R/W		reg_dnr_db_yhdeltagain2, (p1-q1) gain for Y's delta calc. when bs=2, normalized 8 as "1" . unsigned, default = 0
19	R/W		reserved
18:16	R/W		reg_dnr_db_yhdeltagain3, (p1-q1) gain for Y's delta calc. when bs=3, normalized 8 as "1" . unsigned, default = 0
15	R/W		reserved
14: 8	R/W		reg_dnr_db_yhdeltaadjoffst, offset for adjust Y's hdelta (-64, 63). signed, default = 0
7: 6	R/W		reserved
5: 0	R/W		reg_dnr_db_yhdeltaadjgain , gain for adjust Y's hdelta, normalized 32 as "1" . unsigned, default = 32

Table 10-1190 DNR_DB_YHDELTA2_GAIN 0x2d11

Bit(s)	R/W	Default	Description
31:30	R/W		reserved
29:24	R/W		reg_dnr_db_yhdelta2gain2 , gain for bs=2's adjust Y's hdelta2, normalized 64 as "1" . unsigned, default = 8
23:21	R/W		reserved
20:16	R/W		reg_dnr_db_yhdelta2offst2 , offset for bs=2's adjust Y's hdelta2 (-16, 15). signed, default = 0
15:14	R/W		reserved
13: 8	R/W		reg_dnr_db_yhdelta2gain3 , gain for bs=3's adjust Y's hdelta2, normalized 64 as "1" . unsigned, default = 4
7: 5	R/W		reserved
4: 0	R/W		reg_dnr_db_yhdelta2offst3 , offset for bs=3's adjust Y's hdelta2 (-16, 15). signed, default = 0

Table 10-1191 DNR_DB_CHDELTA_GAIN 0x2d12

Bit(s)	R/W	Default	Description
31:27	R/W		reserved
26:24	R/W		reg_dnr_db_chdeltagain1, (p1-q1) gain for UV's delta calc. when bs=1, normalized 8 as "1". unsigned, default = 2
23	R/W		reserved
22:20	R/W		reg_dnr_db_chdeltagain2, (p1-q1) gain for UV's delta calc. when bs=2, normalized 8 as "1". unsigned, default = 0
19	R/W		reserved
18:16	R/W		reg_dnr_db_chdeltagain3, (p1-q1) gain for UV's delta calc. when bs=3, normalized 8 as "1". unsigned, default = 0
15	R/W		reserved
14: 8	R/W		reg_dnr_db_chdeltaadjoffst, offset for adjust UV's hdelta (-64, 63). signed, default = 0

Amlogic Proprietary and Confidential
Copyright © Amlogic. All rights reserved.

Bit(s)	R/W	Default	Description
7: 6	R/W		reserved
5: 0	R/W		reg_dnr_db_chdeltaadjgain , gain for adjust UV's hdelta, normalized 32 as "1". unsigned, default = 32

Table 10-1192 DNR_DB_CHDELTA2_GAIN 0x2d13

Bit(s)	R/W	Default	Description
31:30	R/W		reserved
29:24	R/W		reg_dnr_db_chdelta2gain2 , gain for bs=2's adjust UV's hdelta2, normalized 64 as "1" . unsigned, default = 8
23:21	R/W		reserved
20:16	R/W		reg_dnr_db_chdelta2offst2 , offset for bs=2's adjust UV's hdelta2 (-16, 15). signed, default = 0
15:14	R/W		reserved
13: 8	R/W		reg_dnr_db_chdelta2gain3 , gain for bs=2's adjust UV's hdelta2, normalized 64 as "1" . unsigned, default = 4
7: 5	R/W		reserved
4: 0	R/W		reg_dnr_db_chdelta2offst3 , offset for bs=2's adjust UV's hdelta2 (-16, 15). signed, default = 0

Table 10-1193 DNR_DB_YC_VEDGE_THD 0x2d14

Bit(s)	R/W	Default	Description
31:16	R/W		reserved
15: 8	R/W		reg_dnr_db_yvedgethd , special Y's edge thd for vdb. unsigned, default = 12
7: 0	R/W		reg_dnr_db_cvedgethd , special UV's edge thd for vdb. unsigned, default = 12

Table 10-1194 DNR_DB_VBS_MISC 0x2d15

Bit(s)	R/W	Default	Description
31:24	R/W		reg_dnr_db_vgapthd, vertical gap thd (<=) for very sure blockiness . unsigned, default = 8
23:16	R/W		reg_dnr_db_vactthd, thd of vact, for block classification . unsigned, default = 10
15: 8	R/W		reg_dnr_db_vgapdifthd , dif thd between vgap and vact. unsigned, default = 4
7: 4	R/W		reserved
3: 2	R/W		reg_dnr_db_vbsmax , max value of vbs for global control. unsigned, default = 2
1: 0	R/W		reg_dnr_db_vgbsthd, gbs thd (>=) for vbs calc. . unsigned, default = 1

Amlogic Proprietary and Confidential
Copyright © Amlogic. All rights reserved.

Table 10-1195 DNR_DB_YVDELTA_GAIN 0x2d16

Bit(s)	R/W	Default	Description
31:30	R/W		reserved
29:24	R/W		reg_dnr_db_yvdeltaadjgain , gain for adjust Y's vdelta, normalized 32 as "1". unsigned, default = 32
23	R/W		reserved
22:16	R/W		reg_dnr_db_yvdeltaadjoffst, offset for adjust Y's vdelta (-64, 63). signed, default = 0
15:14	R/W		reserved
13: 8	R/W		reg_dnr_db_yvdelta2gain, gain for adjust Y's vdelta2, normalized 64 as "1". unsigned, default = 8
7: 5	R/W		reserved
4: 0	R/W		reg_dnr_db_yvdelta2offst , offset for adjust Y's vdelta2 (-16, 15). signed, default = 0

Table 10-1196 DNR_DB_CVDELTA_GAIN 0x2d17

Bit(s)	R/W	Default	Description
31:30	R/W		reserved
29:24	R/W		reg_dnr_db_cvdeltaadjgain , gain for adjust UV's vdelta, normalized 32 as "1". unsigned, default = 32
23	R/W		reserved
22:16	R/W		reg_dnr_db_cvdeltaadjoffst, offset for adjust UV's vdelta (-64, 63). signed, default = 0
15:14	R/W		reserved
13: 8	R/W		reg_dnr_db_cvdelta2gain, gain for adjust UV's vdelta2, normalized 64 as "1". unsigned, default = 8
7: 5	R/W		reserved
4: 0	R/W		reg_dnr_db_cvdelta2offst , offset for adjust UV's vdelta2 (-16, 15). signed, default = 0

Table 10-1197 DNR_RO_GBS_STAT_LR 0x2d19

Bit(s)	R/W	Default	Description
31: 0	R		ro_gbs_stat_lr . unsigned, default = 0

Table 10-1198 DNR_RO_GBS_STAT_LL 0x2d18

Bit(s)	R/W	Default	Description
31: 0	R		ro_gbs_stat_ll . unsigned, default = 0

Amlogic Proprietary and Confidential
Copyright © Amlogic. All rights reserved.

Table 10-1199 DNR_RO_GBS_STAT_RR 0x2d1a

Bit(s)	R/W	Default	Description
31: 0	R		ro_gbs_stat_rr . unsigned, default = 0

Table 10-1200 DNR_RO_GBS_STAT_DIF 0x2d1b

Bit(s)	R/W	Default	Description
31: 0	R		ro_gbs_stat_dif . unsigned, default = 0

Table 10-1201 DNR_RO_GBS_STAT_CNT 0x2d1c

Bit(s)	R/W	Default	Description
31: 0	R		ro_gbs_stat_cnt . unsigned, default = 0

Table 10-1202 DNR_RO_HBOF_STAT_CNT_0 0x2d1d

Bit(s)	R/W	Default	Description
31: 0	R		ro_hbof_stat_cnt0. unsigned, default = 0

Table 10-1203 DNR_RO_HBOF_STAT_CNT_31 0x2d3c

Bit(s)	R/W	Default	Description
31: 0	R		ro_hbof_stat_cnt31 . unsigned, default = 0

Table 10-1204 DNR_RO_VBOF_STAT_CNT_0 0x2d3d

Bit(s)	R/W	Default	Description
31: 0	R		ro_vbof_stat_cnt0. unsigned, default = 0

Table 10-1205 DNR_RO_VBOF_STAT_CNT_31 0x2d5c

Bit(s)	R/W	Default	Description
31: 0	R		ro_vbof_stat_cnt31. unsigned, default = 0

Table 10-1206 DNR_DM_ADP_EN 0x2d5d

Bit(s)	R/W	Default	Description
31:8	R/W		reserved
7	R/W	1	Reg_dnr_scene_change_flag // scence change flag for dnr
6	R/W	1	Reg_dnr_dm_lpf_en // enable lpf fof demosquito filter
5	R/W	1	Reg_dnr_dm_adp_level_en // enable adptive demosquito level
4	R/W	1	Reg_dnr_dm_flag2bdif_en // enable edge flag to blkdif calc

Amlogic Proprietary and Confidential
Copyright © Amlogic. All rights reserved.

Bit(s)	R/W	Default	Description
3: 2	R/W	1	Reg_dnr_dm_edgeiir // edge flag iir mode, 0: cur, 1: max(pre,cur), 2,3: choice by org mtn
1	R/W	1	Reg_dnr_dm_dirdifmod // dif mode for direction calc , 0: abs(dif02), 1: (abs(dif01) +abs(dif21))/2
0	R/W	0	Reg_dnr_dm_sur_dir_mod // sure direction mode for cordif calc

Table 10-1207 DNR_DM_EDGE_DIR 0x2d5e

Bit(s)	R/W	Default	Description
31:24	R/W		reserved
23:16	R/W	2	Reg_dnr_dm_dirdifcor // dif coring threshold for direction calc
15:8	R/W	160	Reg_dnr_dm_edgecordifthd // edge flag down when cordif is lager than theshold
7:0	R/W	60	Reg_dnr_dm_mtnrt // motion ration for mtn decision

Table 10-1208 DNR_DM_CTRL 0x2d60

Bit(s)	R/W	Default	Description
31:14	R/W		reserved
13	R/W	1	Reg_dnr_dm_fedgeflag_en, enable edge flag calc. Of each frame
12	R/W	1	Reg_dnr_dm_fedgeflag_cl, clear frame edge flag if needed
11:10	R/W	1	Reg_dnr_dm_fedgeflg_df, user defined edge when fedge_flg_en=0
9	R/W	1	Reg_dnr_dm_en, enable demosquito function
8	R/W	1	Reg_dnr_dm_chrmen, enable chroma proc. For demosquito
7:6	R/W	3	Reg_dnr_dm_level, demosquito level
5:4	R/W	1	Reg_dnr_dm_leveldw0, level down when gbs is small
3:2	R/W	1	Reg_dnr_dm_level_dw1, level down for no edge/flat blocks
1:0	R/W	0	Reg_dnr_dm_gbsthd, small/large threshold for gbs <=

Table 10-1209 DNR_DM_NR_BLND 0x2d61

Bit(s)	R/W	Default	Description
31:25	R/W		reserved
24	R/W	0	reg_dnr_dm_defalpen, 1 to enable user defined alpha for DM/NR blend
23:16	R/W	0	reg_dnr_dm_defalp , user defined alpha for DM/NR blend
15	R/W		reserved
14: 9	R/W	32	reg_dnr_dm_yalpgain , gain for DM/NR alpha, normalized 32 as 1

Amlogic Proprietary and Confidential
Copyright © Amlogic. All rights reserved.

Table 10-1210 DNR_DM_RNG_THD 0x2d62

Bit(s)	R/W	Default	Description
31:24	R/W		reserved
23:16	R/W	2	reg_dnr_dm_rgnminthd
15: 8	R/W	64	reg_dnr_dm_rgnmaxthd

Table 10-1211 DNR_DM_RNG_GAIN_OFST 0x2d63

Bit(s)	R/W	Default	Description
31:14	R/W		reserved
13: 8	R/W	16	reg_dnr_dm_rgngain, normalized 16 as 1

Table 10-1212 DNR_DM_DIR_MISC 0x2d64

Bit(s)	R/W	Default	Description
31:30	R/W		reserved
28:24	R/W	0	reg_dnr_dm_diralpgain
23:22	R/W		reserved
21:16	R/W	0	reg_dnr_dm_diralpofst
15:13	R/W		reserved
12: 8	R/W	0	reg_dnr_dm_diralpmin

Table 10-1213 DNR_DM_COR_DIF 0x2d65

Bit(s)	R/W	Default	Description
31:6	R/W		reserved

Table 10-1214 DNR_DM_FLT_THD 0x2d66

Bit(s)	R/W	Default	Description
31:24	R/W	4	reg_dnr_dm_fltthd00, block flat threshold0 for block average difference when gbs is small
23:16	R/W	6	reg_dnr_dm_fltthd01, block flat threshold1 for block average difference when gbs is small
15: 8	R/W	9	reg_dnr_dm_fltthd10, block flat threshold0 for block average difference when gbs is larger

Amlogic Proprietary and Confidential
Copyright © Amlogic. All rights reserved.

Table 10-1215 DNR_DM_VAR_THD 0x2d67

Bit(s)	R/W	Default	Description
31:24	R/W	2	reg_dnr_dm_varthd00 , block variance threshold0 (>=) when gbs is small
23:16	R/W	15	reg_dnr_dm_varthd01 , block variance threshold1 (<=) when gbs is small
15: 8	R/W	3	reg_dnr_dm_varthd10 , block variance threshold0 (>=) when gbs is larger

Table 10-1216 DNR_DM_EDGE_DIF_THD 0x2d68

Bit(s)	R/W	Default	Description
31:24	R/W	32	reg_dnr_dm_edgethd0 , block edge threshold (<=) when gbs is small
23:16	R/W	48	reg_dnr_dm_edgethd1 , block edge threshold (<=) when gbs is larger
15: 8	R/W	48	reg_dnr_dm_difthd0 , block dif threshold (<=) when gbs is small

Table 10-1217 DNR_DM_AVG_THD 0x2d69

Bit(s)	R/W	Default	Description
31:16	R/W		reserved
15: 8	R/W	160	reg_dnr_dm_avgthd0 , block average threshold (>=) when gbs is small

Table 10-1218 DNR_DM_AVG_VAR_DIF_THD 0x2d6a

Bit(s)	R/W	Default	Description
31:16	R/W		reserved
15: 8	R/W	12	reg_dnr_dm_avgdifthd , block average dif threshold(<) between cur and up block for flat block

Table 10-1219 DNR_DM_EDGE_DIF_THD2 0x2d6b

Bit(s)	R/W	Default	Description
31:24	R/W		reserved
23:16	R/W	24	reg_dnr_dm_varthd2, block variance threshold (>=) for edge block detect
15: 8	R/W	40	reg_dnr_dm_edgethd2, block edge threshold (>=)

Table 10-1220 DNR_DM_DIF_FLT_MISC 0x2d6c

Bit(s)	R/W	Default	Description
31:28	R/W	0	reg_dnr_dm_ldifoob, pre-defined large dif when pixel out of block
27:24	R/W	0	reg_dnr_dm_bdifoob, pre-defined block dif when pixel out of block
23:16	R/W	200	reg_dnr_dm_fltalp, pre-defined alpha for dm and nr blending when block is flat with mos

Amlogic Proprietary and Confidential
Copyright © Amlogic. All rights reserved.

Bit(s)	R/W	Default	Description
15:12	R/W		reserved
11:8	R/W	12	reg_dnr_dm_fltminbdif, pre-defined min block dif for dm filter when block is flat with mos

Table 10-1221 DNR_DM_SDIF_LUT0_2 0x2d6d

Bit(s)	R/W	Default	Description
31:21	R/W		reserved
20:16	R/W	16	reg_dnr_dm_sdiflut0, normally 0-16
15:13	R/W		reserved
12:8	R/W	14	reg_dnr_dm_sdiflut1
7:5	R/W		reserved

Table 10-1222 DNR_DM_SDIF_LUT3_5 0x2d6e

Bit(s)	R/W	Default	Description
31:21	R/W		reserved
20:16	R/W	10	reg_dnr_dm_sdiflut3
15:13	R/W		reserved
12:8	R/W	7	reg_dnr_dm_sdiflut4
7:5	R/W		reserved

Table 10-1223 DNR_DM_SDIF_LUT6_8 0x2d6f

Bit(s)	R/W	Default	Description
31:21	R/W		reserved
20:16	R/W	3	reg_dnr_dm_sdiflut6
15:13	R/W		reserved
12:8	R/W	1	reg_dnr_dm_sdiflut7
7:5	R/W		reserved

Table 10-1224 DNR_DM_LDIF_LUT0_2 0x2d70

Bit(s)	R/W	Default	Description
31:21	R/W		reserved
20:16	R/W	0	reg_dnr_dm_ldiflut0
15:13	R/W		reserved
12:8	R/W	4	reg_dnr_dm_ldiflut1
7:5	R/W		reserved

Amlogic Proprietary and Confidential
Copyright © Amlogic. All rights reserved.

Table 10-1225 DNR_DM_LDIF_LUT3_5 0x2d71

Bit(s)	R/W	Default	Description
31:21	R/W		reserved
20:16	R/W	14	reg_dnr_dm_ldiflut3
15:13	R/W		reserved
12:8	R/W	15	reg_dnr_dm_ldiflut4
7:5	R/W		reserved

Table 10-1226 DNR_DM_LDIF_LUT6_8 0x2d72

Bit(s)	R/W	Default	Description
31:21	R/W		reserved
20:16	R/W	16	reg_dnr_dm_ldiflut6
15:13	R/W		reserved
12:8	R/W	16	reg_dnr_dm_ldiflut7
7:5	R/W		reserved

Table 10-1227 DNR_DM_DIF2NORM_LUT0_2 0x2d73

Bit(s)	R/W	Default	Description
31:21	R/W		reserved
20:16	R/W	16	reg_dnr_dm_dif2normlut0
15:13	R/W		reserved
12:8	R/W	5	reg_dnr_dm_dif2normlut1
7:5	R/W		reserved

Table 10-1228 DNR_DM_DIF2NORM_LUT3_5 0x2d74

Bit(s)	R/W	Default	Description
31:21	R/W		reserved
20:16	R/W	2	reg_dnr_dm_dif2normlut3
15:13	R/W		reserved
12:8	R/W	2	reg_dnr_dm_dif2normlut4
7:5	R/W		reserved

Table 10-1229 DNR_DM_DIF2NORM_LUT6_8 0x2d75

Bit(s)	R/W	Default	Description
31:21	R/W		reserved
20:16	R/W	1	reg_dnr_dm_dif2normlut6

Amlogic Proprietary and Confidential
Copyright © Amlogic. All rights reserved.

Bit(s)	R/W	Default	Description
15:13	R/W		reserved
12:8	R/W	1	reg_dnr_dm_dif2normlut7
7:5	R/W		reserved

Table 10-1230 DNR_DM_GMS_THD 0x2d76

Bit(s)	R/W	Default	Description
31:16	R/W		reserved
15:8	R/W	0	reg_gms_stat_thd0

Table 10-1231 DNR_RO_DM_GMS_STST_CNT 0x2d77

Bit(s)	R/W	Default	Description
31:0	RO		ro_dm_gms_stat_cnt

Table 10-1232 DNR_RO_DM_GMS_STST_MS 0x2d78

Bit(s)	R/W	Default	Description
31:0	RO		ro_dm_gms_stat_ms

Table 10-1233 DNR_DM_EDGE_GAIN 0x2d79

Bit(s)	R/W	Default	Description
31:24	R/W	8	reg_dnr_dm_alpedgegain0 : // unsigned , default = 8 , edge based gain for alpha, normalized 16 as "1"
23:16	R/W	16	reg_dnr_dm_alpedgegain1 : // unsigned , default = 16 , edge based gain for alpha, normalized 16 as "1"
15: 8	R/W	24	reg_dnr_dm_alpedgegain2 : // unsigned , default = 24 , edge based gain for alpha, normalized 16 as "1"
7: 0	R/W	32	reg_dnr_dm_alpedgegain3 : // unsigned , default = 32 , edge based gain for alpha, normalized 16 as "1"

Table 10-1234 DNR_DM_FLG_BDIF 0x2d7a

Bit(s)	R/W	Default	Description
31:24	R/W	0	reg_dnr_dm_flg2bdif0 : // unsigned , default = 0 , (0-16), edge flg to blkdif calc.
23:16	R/W	96	reg_dnr_dm_flg2bdif1 : // unsigned , default = 96 , (0-16), edge flg to blkdif calc.
15: 8	R/W	160	reg_dnr_dm_flg2bdif2 : // unsigned , default = 160 , (0-16), edge flg to blkdif calc.
7: 0	R/W	192	reg_dnr_dm_flg2bdif3 : // unsigned , default = 192 , (0-16), edge flg to blkdif calc.

Amlogic Proprietary and Confidential
Copyright © Amlogic. All rights reserved.

Table 10-1235 DNR_DM_GBS_RORM 0x2d7b

Bit(s)	R/W	Default	Description
15:12	R/W	0	reg_dnr_dm_gbs4difnorm0 : // unsigned , default = 0 , gbs=0 for dif norm calc.
11: 8	R/W	1	reg_dnr_dm_gbs4difnorm1 : // unsigned , default = 1 , gbs=1 for dif norm calc.
7: 4	R/W	4	reg_dnr_dm_gbs4difnorm2 : // unsigned , default = 4 , gbs=2 for dif norm calc.
3: 0	R/W	6	reg_dnr_dm_gbs4difnorm3 : // unsigned , default = 6 , gbs=3 for dif norm calc.

Table 10-1236 DNR_DM_FLG_LEV 0x2d7c

Bit(s)	R/W	Default	Description
13:12	R/W	1	reg_dnr_dm_flg2lev0 : // unsigned , default = 1 , edge flg to filter level calc.
9: 8	R/W	3	reg_dnr_dm_flg2lev1 : // unsigned , default = 3 , edge flg to filter level calc.
5: 4	R/W	3	reg_dnr_dm_flg2lev2 : // unsigned , default = 3 , edge flg to filter level calc.
1: 0	R/W	3	reg_dnr_dm_flg2lev3 : // unsigned , default = 3 , edge flg to filter level calc.

Table 10-1237 DNR_DM_DIF_FLG_TH 0x2d7d

Bit(s)	R/W	Default	Description
15: 8	R/W	128	reg_dnr_dm_dif2flgthd1 : // unsigned , default = 128 , dif to edge flg threshold 1
7: 0	R/W	192	reg_dnr_dm_dif2flgthd2 : // unsigned , default = 192 , dif to edge flg threshold 2

Table 10-1238 DNR_DM_CALP_GAIN_OFST 0x2d7e

Bit(s)	R/W	Default	Description
21:16	R/W	16	reg_dnr_dm_calpgain : // unsigned , default = 16 , chroma gain for nr/dm alpha, normalized 32 as "1"
8: 0	R/W	-64	reg_dnr_dm_calpoffst : // signed , default = -64 , (-255, 255), chroma offset for nr/dm alpha

Table 10-1239 NR2_POLAR3_MODE 0x2d98

Bit(s)	R/W	Default	Description
19:18	R/W	3	reg_polar3_f02lpf_mod_0 : default = 3 //u2x2: low pass filter mode for field 0 and field2 before polar3 detection; 0 for no lpf, 1: [1 2 1]/4 vert lpf; 2: [1 2 1; 2 4 2; 1 2 1]/16 2d lpf, p1 no hlpf; 2: [1 2 1; 2 4 2; 1 2 1]/16 2d lpf, p1 [1 2 1]/4 hlpf
17:16	R/W	3	reg_polar3_f02lpf_mod_1 : default = 3 //u2x2: low pass filter mode for field 0 and field2 before polar3 detection; 0 for no lpf, 1: [1 2 1]/4 vert lpf; 2: [1 2 1; 2 4 2; 1 2 1]/16 2d lpf, p1 no hlpf; 2: [1 2 1; 2 4 2; 1 2 1]/16 2d lpf, p1 [1 2 1]/4 hlpf
15:8	R/W	5	reg_polar3_dif02_thrd_0 : default = 5 //u8x2: threshold of dif for polar3 detection except for 32 detection, only do polar3 detection on obvious motion, [0] for luma, 1[1] for chroma
7:0	R/W	5	reg_polar3_dif02_thrd_1 : default = 5 //u8x2: threshold of dif for polar3 detection except for 32 detection, only do polar3 detection on obvious motion, [0] for luma, 1[1] for chroma

Amlogic Proprietary and Confidential
Copyright © Amlogic. All rights reserved.

Table 10-1240 NR2_POLAR3_THRD 0x2d99

Bit(s)	R/W	Default	Description
31:24	R/W	30	reg_polar3_txtf02_thrd_0 : default = 30 //u8x2: threshold to vertical f0f2 texture, if texture larger than this threshold, will not do the polar3 decision.
23:16	R/W	30	reg_polar3_txtf02_thrd_1 : default = 30 //u8x2: threshold to vertical f0f2 texture, if texture larger than this threshold, will not do the polar3 decision.
15:8	R/W	20	reg_polar3_txtf1_thrd_0 : default = 20 //u8x2: threshold to vertical f0f2 texture, if texture larger than this threshold, will not do the polar3 decision.
7:0	R/W	20	reg_polar3_txtf1_thrd_1 : default = 20 //u8x2: threshold to vertical f0f2 texture, if texture larger than this threshold, will not do the polar3 decision.

Table 10-1241 NR2_POLAR3_PARA0 0x2d9a

Bit(s)	R/W	Default	Description
31:28	R/W	6	reg_polar3_rate0_0 : default = 6 //u4x2: delt = rate*dif02/32, e.g. f2<f0, if f1 within((f0+f2)/2 - delt), ((f0+f2)/2 + delt), then polar3_smoothmv++;
27:24	R/W	6	reg_polar3_rate0_1 : default = 6 //u4x2: delt = rate*dif02/32, e.g. f2<f0, if f1 within((f0+f2)/2 - delt), ((f0+f2)/2 + delt), then polar3_smoothmv++;
23:20	R/W	8	reg_polar3_rate1_0 : default = 8 //u4x2: delt = rate*dif02/32, e.g. f2<f0, if f1< ((f0+f2)/2 - delt), then polar3_m1++; if f1>((f0+f2)/2 + delt), then polar3_p1++;
19:16	R/W	8	reg_polar3_rate1_1 : default = 8 //u4x2: delt = rate*dif02/32, e.g. f2<f0, if f1< ((f0+f2)/2 - delt), then polar3_m1++; if f1>((f0+f2)/2 + delt), then polar3_p1++;
15:12	R/W	2	reg_polar3_rate2_0 : default = 2 //u4x2: delt = rate*dif02/32, e.g. f2<f0, if f1< (f2 - delt- ofset2), then polar3_m2++; if f1>((f0 + delt+ ofset2), then polar3_p2++;
11:8	R/W	2	reg_polar3_rate2_1 : default = 2 //u4x2: delt = rate*dif02/32, e.g. f2<f0, if f1< (f2 - delt- ofset2), then polar3_m2++; if f1>((f0 + delt+ ofset2), then polar3_p2++;
7:4	R/W	1	reg_polar3_ofst1_0 : default = 1 //s4x2: delt = rate*dif02/32, e.g. f2<f0, if f1< (f2 - delt- ofset2), then polar3_m2++; if f1>((f0 + delt+ ofset2), then polar3_p2++;
3:0	R/W	1	reg_polar3_ofst1_1 : default = 1 //s4x2: delt = rate*dif02/32, e.g. f2<f0, if f1< (f2 - delt- ofset2), then polar3_m2++; if f1>((f0 + delt+ ofset2), then polar3_p2++;

Table 10-1242 NR2_POLAR3_PARA1 0x2d9b

Bit(s)	R/W	Default	Description
31:24	R/W	48	reg_polar3_rate3_0 : default = 48 //u8x2: delt = rate*dif02/32, e.g. f2<f0, if f1<(f2 - delt- ofset3) or f1>((f0 + delt+ofst3), then polar3_32++;
23:16	R/W	48	reg_polar3_rate3_1 : default = 48 //u8x2: delt = rate*dif02/32, e.g. f2<f0, if f1<(f2 - delt- ofset3) or f1>((f0 + delt+ofst3), then polar3_32++;
15:12	R/W	2	reg_polar3_ofst3_0 : default = 2 //s4x2: delt = rate*dif02/32, e.g. f2<f0, if f1< (f2 - delt-ofst3) or f1>((f0 + delt+ofst3), then polar3_32++;
11:8	R/W	2	reg_polar3_ofst3_1 : default = 2 //s4x2: delt = rate*dif02/32, e.g. f2<f0, if f1< (f2 - delt-ofst3) or f1>((f0 + delt+ofst3), then polar3_32++;
7:4	R/W	2	reg_polar3_ofst2_0 : default = 2 //s4x2: delt = rate*dif02/32, e.g. f2<f0, if f1< (f2 - delt- ofset2), then polar3_m2++; if f1>((f0 + delt+ ofset2), then polar3_p2++;
3:0	R/W	2	reg_polar3_ofst2_1 : default = 2 //s4x2: delt = rate*dif02/32, e.g. f2<f0, if f1< (f2 - delt- ofset2), then polar3_m2++; if f1>((f0 + delt+ ofset2), then polar3_p2++;

Amlogic Proprietary and Confidential
Copyright © Amlogic. All rights reserved.

Table 10-1243 NR2_POLAR3_CTRL 0x2d9c

Bit(s)	R/W	Default	Description
16	R.O	0	reg_polar3_ro_reset : default = 0 //u1: reset signal of the polar3 read only registers
15:8	R/W	10	reg_polar3_h_mute : default = 10 //u8: horizontally pixels to mute for left right sides for polar3 detection;
7:0	R/W	10	reg_polar3_v_mute : default = 10 //u8: horizontally pixels to mute for top and bottom sides for polar3 detection;

Table 10-1244 NR2_RO_POLAR3_NUMOFPIX 0x2d9d

Bit(s)	R/W	Default	Description
23:0	R.O	0	ro_polar3_numofpix : default = 0 //u24, number of pixels detected as polar3

Table 10-1245 NR2_RO_POLAR3_SMOOTHMV 0x2d9e

Bit(s)	R/W	Default	Description
23:0	R.O	0	ro_polar3_smoothmv : default = 0 //u24, number of pixels with smooth mv, F(t) is close between avg of f(t-1) and f(t+1);

Table 10-1246 NR2_RO_POLAR3_M1 0x2d9f

Bit(s)	R/W	Default	Description
23:0	R.O	0	ro_polar3_m1 : default = 0 //u24, number of pixels with F(t) is close to f(t-1) instead of f(t+1), but in between [f(t-1), f(t+1)];

Table 10-1247 NR2_RO_POLAR3_P1 0x2da0

Bit(s)	R/W	Default	Description
23:0	R.O	0	ro_polar3_p1 : default = 0 //u24, number of pixels with F(t) is close to f(t+1) instead of f(t-1), but in between [f(t-1), f(t+1)];

Table 10-1248 NR2_RO_POLAR3_M2 0x2da1

Bit(s)	R/W	Default	Description
23:0	R.O	0	ro_polar3_m2 : default = 0 //u24, number of pixels with F(t) is close to f(t-1) instead of f(t+1), but out side of (f(t-1), f(t+1));

Table 10-1249 NR2_RO_POLAR3_P2 0x2da2

Bit(s)	R/W	Default	Description
23:0	R.O	0	ro_polar3_p2 : default = 0 //u24, number of pixels with F(t) is close to f(t+1) instead of f(t-1), but out side of (f(t-1), f(t+1));

Amlogic Proprietary and Confidential
Copyright © Amlogic. All rights reserved.

Table 10-1250 NR2_RO_POLAR3_32 0x2da3

Bit(s)	R/W	Default	Description
23:0	R.O	0	ro_polar3_32 : default = 0 //u24, number of pixels with F(t) far from [f(t-1),f(t+1)] and f(t-1) is close to f(t+1);

Table 10-1251 NR4_DRT_CTRL 0x2da4

Bit(s)	R/W	Default	Description
31:24	R/W	16	reg_nr4_ydrt_3line_ssd_gain : // unsigned , default = 16 gain to max ssd normalized 16 as '1'
23:16	R/W	16	reg_nr4_ydrt_5line_ssd_gain : // unsigned , default = 16 gain to max ssd normalized 16 as '1'
14:13	R/W	1	reg_nr4_drt_yhsad_mode : // unsigned , default = 1 mode for luma horiztonal sad calc., 0: no vertical lpf, 1: vertical [1 2 1], 2 or 3: vertical [1 2 2 2 1] if 5 lines
12:11	R/W	1	reg_nr4_drt_chsad_mode : // unsigned , default = 1 mode for chroma horiztonal sad calc., 0: no vertical lpf, 1: vertical [1 2 1], 2 or 3: vertical [1 2 2 2 1] if 5 lines
10	R/W	1	reg_nr4_drt_yhsad_hlpf : // unsigned , default = 1 hlpf for luma hsad of drt calculation, 0: no lpf, 1: with [1 2 1] hlpf
9	R/W	1	reg_nr4_drt_yvsad_hlpf : // unsigned , default = 1 hlpf for luma vsad of drt calculation, 0: no lpf, 1: with [1 2 1] hlpf
8	R/W	1	reg_nr4_drt_ydsad_hlpf : // unsigned , default = 1 hlpf for luma dsad of drt calculation, 0: no lpf, 1: with [1 2 1] hlpf
7	R/W	1	reg_nr4_drt_chsad_hlpf : // unsigned , default = 1 hlpf for chrome hsad of drt calculation, 0: no lpf, 1: with [1 2 1] hlpf
6	R/W	1	reg_nr4_drt_cvsad_hlpf : // unsigned , default = 1 hlpf for chroma vsad of drt calculation, 0: no lpf, 1: with [1 2 1] hlpf
5	R/W	1	reg_nr4_drt_cdsad_hlpf : // unsigned , default = 1 hlpf for chroma dsad of drt calculation, 0: no lpf, 1: with [1 2 1] hlpf
4	R/W	1	reg_nr4_ydrt_dif_mode : // unsigned , default = 1 0:y_dif, 1: y_dif + (u_dif + v_dif)/2
3: 2	R/W	2	reg_nr4_cdrt_dif_mode : // unsigned , default = 2 0:(u_dif + v_dif), 1: y_dif/4 + (u_dif + v_dif)*3/4, 2:y_dif/2 + (u_dif + v_dif)/2, 3: y_dif (not recommended)
1:0	R/W		reserved

Table 10-1252 NR4_DRT_YSAD_GAIN 0x2da5

Bit(s)	R/W	Default	Description
31:24	R/W	16	reg_nr4_ysad_hrz_gain : // unsigned , default = 16 gain for horizontal sad, 16 normalized to "1"
23:16	R/W	20	reg_nr4_ysad_diag_gain : // unsigned , default = 20 gain for diagonal sad, 16 normalized to "1"
15: 8	R/W	16	reg_nr4_ysad_vrt_gain : // unsigned , default = 16 gain for vertical sad, 16 normalized to "1"
5: 0	R/W	6	reg_nr4_drt_ysad_core_rate : // unsigned , default = 6 rate of coring for sad(theta) - sad(theta+pi/2)*rate/64

Amlogic Proprietary and Confidential
Copyright © Amlogic. All rights reserved.

Table 10-1253 NR4_DRT_CSAD_GAIN 0x2da6

Bit(s)	R/W	Default	Description
31:24	R/W	16	reg_nr4_csad_hrz_gain : // unsigned , default = 16 gain for horizontal sad, 16 normalized to "1"
23:16	R/W	20	reg_nr4_csad_diag_gain : // unsigned , default = 20 gain for diagonal sad, 16 normalized to "1"
15: 8	R/W	16	reg_nr4_csad_vrt_gain : // unsigned , default = 16 gain for vertical sad, 16 normalized to "1"
5: 0	R/W	6	reg_nr4_drt_csad_core_rate : // unsigned , default = 6 rate of coring for sad(theta) - sad(theta+pi/2)*rate/64

Table 10-1254 NR4_DRT_SAD_ALP_CORE 0x2da7

Bit(s)	R/W	Default	Description
23:20	R/W	0	reg_nr4_ydrt_alp_core_rate : // unsigned , default = 0 luma ratio to min_err, alpha = (min_err - (max_err - min_err)*rate + ofst)/max_err * 64; dft = 0/32
19:16	R/W	0	reg_nr4_cdrt_alp_core_rate : // unsigned , default = 0 chroma ratio to min_err, alpha = (min_err - (max_err - min_err)*rate + ofst)/max_err * 64; dft = 0/32
13: 8	R/W	10	reg_nr4_ydrt_alp_core_ofst : // unsigned , default = 10 luma offset to min_err, alpha = (min_err - (max_err - min_err)*rate + ofst)/max_err * 64; dft = 10
5: 0	R/W	10	reg_nr4_cdrt_alp_core_ofst : // unsigned , default = 10 chroma offset to min_err, alpha = (min_err - (max_err - min_err)*rate + ofst)/max_err * 64; dft = 10

Table 10-1255 NR4_DRT_ALP_MINMAX 0x2da8

Bit(s)	R/W	Default	Description
29:24	R/W	0	reg_nr4_ydrt_alp_min : // unsigned , default = 0 luma min value of alpha, dft = 0
21:16	R/W	63	reg_nr4_ydrt_alp_max : // unsigned , default = 63 luma max value of alpha, dft = 63
13: 8	R/W	0	reg_nr4_cdrt_alp_min : // unsigned , default = 0 chroma min value of alpha, dft = 0
5: 0	R/W	63	reg_nr4_cdrt_alp_max : // unsigned , default = 63 chroma max value of alpha, dft = 63

Table 10-1256 NR4_SNR_CTRL_REG 0x2da9

Bit(s)	R/W	Default	Description
12	R/W	1	reg_nr4_bet2_sel : // unsigned , default = 1
11: 9	R/W	0	reg_nr4_snr2_sel_mode : // unsigned , default = 0 0: no filter, 1: adpgau, adp_drt_lpf blend; 2: adpgau, drt4_lpf blend; 3: adp_drt_lpf method, 4: drt4_lpf method, 5: adp_drt_ //original image blend, 6: drt4_lpf, original image blend, 7: adpgau method; dft=1
8	R/W	1	reg_nr4_snr2_gaulpf_mode : // unsigned , default = 1 0: 3*5 or 5*5 gaussian lpf; 1: 3*3 (window size) gaussian lpf; dft=1
7: 6	R/W	3	reg_nr4_snr2_alpha0_sad_mode : // unsigned , default = 3 0: max_sad*max_ssd; 1: max_sad*max_sad; 2: adp_max_sad*max_ssd; 3: adp_max_sad*adp_max_sad dft=3

Amlogic Proprietary and Confidential
Copyright © Amlogic. All rights reserved.

Bit(s)	R/W	Default	Description
5: 4	R/W	2	reg_nr4_snr2_alpha1_sad_mode : // unsigned , default = 2 0: max_sad; 1: cross_max_sad; 2 or 3: adp_sad dft=2
1: 0	R/W	3	reg_nr4_snr2_adp_drtlpf_mode : // unsigned , default = 3 0: adp_drtlpf [2 1 1]/4, 1: adp_drtlpf [4 2 1 1]/8; 2: adp_drtlpf [2 2 2 1 1]/8; 3: adp_drtlpf [7 7 7 6 5]/32; dft=3;

Table 10-1257 NR4_SNR_ALPHA0_MAX_MIN 0x2daa

Bit(s)	R/W	Default	Description
29:23	R/W	127	reg_nr4_snr2_alp0_ymin : // unsigned , default = 127 normalized to 128 as '1'
22:16	R/W	127	reg_nr4_snr2_alp0_ymax : // unsigned , default = 127 normalized to 128 as '1'
13: 7	R/W	127	reg_nr4_snr2_alp0_cmin : // unsigned , default = 127 normalized to 128 as '1'
6: 0	R/W	127	reg_nr4_snr2_alp0_cmax : // unsigned , default = 127 normalized to 128 as '1'

Table 10-1258 NR4_ALP0C_ERR2CURV_LIMIT0 0x2dab

Bit(s)	R/W	Default	Description
31:24	R/W	0	reg_nr4_snr2_alp0_minerr_cpar0 : // unsigned , default = 0 threshold0 of curve to map mierr to alp0 for chroma channel, this will be set value of flat region mierr that no need blur.
23:16	R/W	25	reg_nr4_snr2_alp0_minerr_cpar1 : // unsigned , default = 25 threshold1 of curve to map mierr to alp0 for chroma channel,this will be set value of texture region mierr that can not blur.
15: 8	R/W	40	reg_nr4_snr2_alp0_minerr_cpar5 : // unsigned , default = 40 rate0 (for mierr<th0) of curve to map mierr to alp0 for chroma channel. the larger of the value, the deep of the slope. 0~255.
7: 0	R/W	40	reg_nr4_snr2_alp0_minerr_cpar6 : // unsigned , default = 40 rate1 (for mierr>th1) of curve to map mierr to alp0 for chroma channel. the larger of the value, the deep of the slope. 0~255.

Table 10-1259 NR4_ALP0C_ERR2CURV_LIMIT1 0x2dac

Bit(s)	R/W	Default	Description
23:16	R/W	127	reg_nr4_snr2_alp0_minerr_cpar2 : // unsigned , default = 127 level limit(for mierr<th0) of curve to map mierr to alp0 for chroma channel, that we can do for flat region. 0~255.
15: 8	R/W	0	reg_nr4_snr2_alp0_minerr_cpar3 : // unsigned , default = 0 level limit(for th0<mierr<th1) of curve to map mierr to alp0 for chroma channel, that we can do for misc region. 0~255.
7: 0	R/W	127	reg_nr4_snr2_alp0_minerr_cpar4 : // unsigned , default = 127 level limit(for mierr>th1) of curve to map mierr to alp0 for chroma channel, that we can do for texture region. 0~255.

Amlogic Proprietary and Confidential
Copyright © Amlogic. All rights reserved.

Table 10-1260 NR4_ALP0Y_ERR2CURV_LIMIT0 0x2dad

Bit(s)	R/W	Default	Description
31:24	R/W	0	reg_nr4_snr2_alp0_minerr_ypar0 : // unsigned , default = 0 threshold0 of curve to map mierr to alp0 for luma channel, this will be set value of flat region mierr that no need blur. 0~255.
23:16	R/W	25	reg_nr4_snr2_alp0_minerr_ypar1 : // unsigned , default = 25 threshold1 of curve to map mierr to alp0 for luma channel,this will be set value of texture region mierr that can not blur.
15: 8	R/W	40	reg_nr4_snr2_alp0_minerr_ypar5 : // unsigned , default = 40 rate0 (for mierr<th0) of curve to map mierr to alp0 for luma channel. the larger of the value, the deep of the slope. 0~255.
7: 0	R/W	40	reg_nr4_snr2_alp0_minerr_ypar6 : // unsigned , default = 40 rate1 (for mierr>th1) of curve to map mierr to alp0 for luma channel. the larger of the value, the deep of the slope. 0~255.

Table 10-1261 NR4_ALP0Y_ERR2CURV_LIMIT1 0x2dae

Bit(s)	R/W	Default	Description
23:16	R/W	127	reg_nr4_snr2_alp0_minerr_ypar2 : // unsigned , default = 127 level limit(for mierr<th0) of curve to map mierr to alp0 for luma channel, set to alp0 that we can do for flat region. 0~255.
15: 8	R/W	0	reg_nr4_snr2_alp0_minerr_ypar3 : // unsigned , default = 0 level limit(for th0<mierr<th1) of curve to map mierr to alp0 for luma channel, alp0 that we can do for misc region. 0~255.
7: 0	R/W	127	reg_nr4_snr2_alp0_minerr_ypar4 : // unsigned , default = 127 level limit(for mierr>th1) of curve to map mierr to alp0 for luma channel, alp0 that we can do for texture region. 0~255.

Table 10-1262 NR4_SNR_ALPA1_RATE_AND_OFST 0x2daf

Bit(s)	R/W	Default	Description
23:18	R/W	0	reg_nr4_snr2_alp1_ycore_rate : // unsigned , default = 0 normalized 64 as "1"
17:12	R/W	0	reg_nr4_snr2_alp1_ccore_rate : // unsigned , default = 0 normalized 64 as "1"
11: 6	R/W	3	reg_nr4_snr2_alp1_ycore_ofst : // signed , default = 3 normalized 64 as "1"
5: 0	R/W	3	reg_nr4_snr2_alp1_ccore_ofst : // signed , default = 3 normalized 64 as "1"

Table 10-1263 NR4_SNR_ALPHA1_MAX_MIN 0x2db0

Bit(s)	R/W	Default	Description
23:18	R/W	0	reg_nr4_snr2_alp1_ymin : // unsigned , default = 0 normalized to 64 as '1'
17:12	R/W	63	reg_nr4_snr2_alp1_ymax : // unsigned , default = 63 normalized to 64 as '1'
11: 6	R/W	0	reg_nr4_snr2_alp1_cmin : // unsigned , default = 0 normalized to 64 as '1'
5: 0	R/W	63	reg_nr4_snr2_alp1_cmax : // unsigned , default = 63 normalized to 64 as '1'

Amlogic Proprietary and Confidential
Copyright © Amlogic. All rights reserved.

Table 10-1264 NR4_ALP1C_ERR2CURV_LIMIT0 0x2db1

Bit(s)	R/W	Default	Description
31:24	R/W	0	reg_nr4_snr2_alp1_minerr_cpar0 : // unsigned , default = 0 annel, this will be set value of flat region mierr that no need directional NR. 0~255.
23:16	R/W	24	reg_nr4_snr2_alp1_minerr_cpar1 : // unsigned , default = 24 hannel,this will be set value of texture region mierr that can not do directional NR. 0~255.
15: 8	R/W	0	reg_nr4_snr2_alp1_minerr_cpar5 : // unsigned , default = 0 a/chroma channel. the larger of the value, the deep of the slope.
7: 0	R/W	20	reg_nr4_snr2_alp1_minerr_cpar6 : // unsigned , default = 20 a/chroma channel. the larger of the value, the deep of the slope. 0~255

Table 10-1265 NR4_ALP1C_ERR2CURV_LIMIT1 0x2db2

Bit(s)	R/W	Default	Description
23:16	R/W	0	reg_nr4_snr2_alp1_minerr_cpar2 : // unsigned , default = 0 will be set to alp1 that we can do for flat region. 0~255.
15: 8	R/W	16	reg_nr4_snr2_alp1_minerr_cpar3 : // unsigned , default = 16 this will be set to alp1 that we can do for misc region. 0~255.
7: 0	R/W	63	reg_nr4_snr2_alp1_minerr_cpar4 : // unsigned , default = 63 will be set to alp1 that we can do for texture region. 0~255.255 before

Table 10-1266 NR4_ALP1Y_ERR2CURV_LIMIT0 0x2db3

Bit(s)	R/W	Default	Description
31:24	R/W	0	reg_nr4_snr2_alp1_minerr_ypar0 : // unsigned , default = 0 thra/chroma channel, this will be set value of flat region mierr that no need directional NR. 0~255.
23:16	R/W	24	reg_nr4_snr2_alp1_minerr_ypar1 : // unsigned , default = 24 thra/chroma channel,this will be set value of texture region mierr that can not do directional NR. 0~255.
15: 8	R/W	0	reg_nr4_snr2_alp1_minerr_ypar5 : // unsigned , default = 0 ratlp1 for luma/chroma channel. the larger of the value, the deep of the slope.
7: 0	R/W	20	reg_nr4_snr2_alp1_minerr_ypar6 : // unsigned , default = 20 ratlp1 for luma/chroma channel. the larger of the value, the deep of the slope. 0~255

Table 10-1267 NR4_ALP1Y_ERR2CURV_LIMIT1 0x2db4

Bit(s)	R/W	Default	Description
23:16	R/W	0	reg_nr4_snr2_alp1_minerr_ypar2 : // unsigned , default = 0 lev to alp1 for luma/chroma channel, this will be set to alp1 that we can do for flat region. 0~255.
15: 8	R/W	16	reg_nr4_snr2_alp1_minerr_ypar3 : // unsigned , default = 16 levierr to alp1 for luma/chroma channel, this will be set to alp1 that we can do for misc region. 0~255.
7: 0	R/W	63	reg_nr4_snr2_alp1_minerr_ypar4 : // unsigned , default = 63 lev to alp1 for luma/chroma channel, this will be set to alp1 that we can do for texture region. 0~255.255 before

Amlogic Proprietary and Confidential
Copyright © Amlogic. All rights reserved.

Table 10-1268 NR4_MTN_CTRL 0x2db5

Bit(s)	R/W	Default	Description
1	R/W	1	reg_nr4_mtn_ref_en : // unsigned , default = 1 enable motion refinement, dft = 1
0	R/W	0	reg_nr4_mtn_ref_bet_sel : // unsigned , default = 0 beta selection mode for motion refinement, 0: beta1, 1: beta2, dft = 0

Table 10-1269 NR4_MTN_REF_PAR0 0x2db6

Bit(s)	R/W	Default	Description
31:24	R/W	24	reg_nr4_mtn_ref_par0 : // unsigned , default = 24 par0 for beta to gain, dft =
23:16	R/W	60	reg_nr4_mtn_ref_par1 : // unsigned , default = 60 par1 for beta to gain, dft =
15: 8	R/W	4	reg_nr4_mtn_ref_par2 : // unsigned , default = 4 par2 for beta to gain, dft =
7: 0	R/W	32	reg_nr4_mtn_ref_par3 : // unsigned , default = 32 par3 for beta to gain, dft =

Table 10-1270 NR4_MTN_REF_PAR1 0x2db7

Bit(s)	R/W	Default	Description
23:16	R/W	128	reg_nr4_mtn_ref_par4 : // unsigned , default = 128 par4 for beta to gain, dft =
15: 8	R/W	40	reg_nr4_mtn_ref_par5 : // unsigned , default = 40 par5 for beta to gain, dft =
7: 0	R/W	20	reg_nr4_mtn_ref_par6 : // unsigned , default = 20 par6 for beta to gain, dft =

Table 10-1271 NR4_MCNR_LUMA_ENH_CTRL 0x2db8

Bit(s)	R/W	Default	Description
3	R/W	1	reg_nr4_luma_plus_en : // unsigned , default = 1 enable luma enhancement, dft = 1
2	R/W	1	reg_nr4_luma_plus_wt_mode : // unsigned , default = 1 luma weight calc mode, 0:sqrt(1+x^2), 1: 1+abs(x), dft = 0
1: 0	R/W	1	reg_nr4_luma_plus_orient_mode : // unsigned , default = 1 0: only use previous orient for pre and cur luma plus, 1: 0: only use current orient for pre and cur luma plus

Table 10-1272 NR4_MCNR_LUMA_STAT_LIMTX 0x2db9

Bit(s)	R/W	Default	Description
29:16	R/W	8	reg_nr4_luma_plus_xst : // unsigned , default = 8 start for luma plus statistic, dft = 8
13: 0	R/W	711	reg_nr4_luma_plus_xed : // unsigned , default = 711 end for luma plus statistic, dft = HSIZE-8-1;

Amlogic Proprietary and Confidential
Copyright © Amlogic. All rights reserved.

Table 10-1273 NR4_MCNR_LUMA_STAT_LIMTY 0x2dba

Bit(s)	R/W	Default	Description
29:16	R/W	8	reg_nr4_luma_plus_yst : // unsigned , default = 8 start for luma plus statistic, dft = 8
13: 0	R/W	231	reg_nr4_luma_plus_yed : // unsigned , default = 231 end for luma plus statistic, dft = VSIZE-8-1

Table 10-1274 NR4_MCNR_LUMA_DIF_CALC 0x2dbb

Bit(s)	R/W	Default	Description
29:24	R/W	8	reg_nr4_luma_plus_ugain : // unsigned , default = 8 U's gain for luma enhancement, 16 normalized as '1'
21:16	R/W	8	reg_nr4_luma_plus_vgain : // unsigned , default = 8 V's gain for luma enhancement, 16 normalized as '1'
15: 8	R/W	2	reg_nr4_luma_plus_ycor_thd : // unsigned , default = 2 Y coring threshold for difference calc., dft = 0
7: 0	R/W	0	reg_nr4_luma_plus_ccor_thd : // unsigned , default = 0 C coring threshold for difference calc., dft = 0

Table 10-1275 NR4_MCNR_LUMAPRE_CAL_PRAM 0x2dbc

Bit(s)	R/W	Default	Description
25:24	R/W	0	reg_nr4_pre_u_orient : // signed , default = 0 orientation of previous U, initial to 0, and will be updated by software
17:16	R/W	0	reg_nr4_pre_v_orient : // signed , default = 0 orientation of previous V, initial to 0, and will be updated by software
15: 8	R/W	0	reg_nr4_pre_u_mean : // unsigned , default = 0 mean of previous U, initial to 0, and will be updated by software
7: 0	R/W	0	reg_nr4_pre_v_mean : // unsigned , default = 0 mean of previousV, initial to 0, and will be updated by software

Table 10-1276 NR4_MCNR_LUMACUR_CAL_PRAM 0x2dbd

Bit(s)	R/W	Default	Description
25:24	R/W	0	reg_nr4_cur_u_orient : // signed , default = 0 orientation of current U, initial to 0, and will be updated by software
17:16	R/W	0	reg_nr4_cur_v_orient : // signed , default = 0 orientation of current V, initial to 0, and will be updated by software
15: 8	R/W	0	reg_nr4_cur_u_mean : // unsigned , default = 0 mean of current U, initial to 0, and will be updated by software
7: 0	R/W	0	reg_nr4_cur_v_mean : // unsigned , default = 0 mean of current, initial to 0, and will be updated by software

Amlogic Proprietary and Confidential
Copyright © Amlogic. All rights reserved.

Table 10-1277 NR4_MCNR_MV_CTRL_REG 0x2dbe

Bit(s)	R/W	Default	Description
13:12	R/W	2	reg_nr4_sad_bitw : // unsigned , default = 2 sad bit width (8 + x) before clip to u8, dft = 1
11: 4	R/W	64	reg_nr4_glb_gain : // unsigned , default = 64 global gain calc. by software, 64 is normalized as '1'
3: 0	R/W	8	reg_nr4_mv_err_rsft : // unsigned , default = 8 right shift for mv err calc., dft = 9

Table 10-1278 NR4_MCNR_MV_GAIN0 0x2dbf

Bit(s)	R/W	Default	Description
31:28	R/W	1	reg_nr4_lftmvx_gain : // unsigned , default = 1 left mvx gain for err calc., dft = 1
27:24	R/W	1	reg_nr4_lftmvy_gain : // unsigned , default = 1 left mvy gain for err calc., dft = 1
23:20	R/W	5	reg_nr4_zmvx_gain : // unsigned , default = 5 zero mvx gain for err calc., dft = 2
19:16	R/W	5	reg_nr4_zmvy_gain : // unsigned , default = 5 zero mvy gain for err calc., dft = 4
15:12	R/W	2	reg_nr4_lmvx0_gain : // unsigned , default = 2 line mvx0 gain for err calc., dft = 1
11: 8	R/W	2	reg_nr4_lmvx1_gain : // unsigned , default = 2 line mvx1 gain for err calc., dft = 1
7: 4	R/W	2	reg_nr4_lmvy0_gain : // unsigned , default = 2 line mvy0 gain for err calc., dft = 1
3: 0	R/W	2	reg_nr4_lmvy1_gain : // unsigned , default = 2 line mvy1 gain for err calc., dft = 1

Table 10-1279 NR4_MCNR_LMV_PARM 0x2dc0

Bit(s)	R/W	Default	Description
31:28	R/W	3	reg_nr4_lmv_rt0 : // unsigned , default = 3 ratio of max lmv
27:24	R/W	3	reg_nr4_lmv_rt1 : // unsigned , default = 3 ratio of second max lmv
21:16	R/W	16	reg_nr4_lmv_num_lmt0 : // unsigned , default = 16 lmv0 least/limit number of (total number - zero_bin)
13: 8	R/W	8	reg_nr4_lmv_num_lmt1 : // unsigned , default = 8 lmv1 least/limit number of (total number - zero_bin - max0)
1: 0	R/W	1	reg_nr4_max_sad_rng : // unsigned , default = 1 search range of max2 sad in small region, dft = 1

Table 10-1280 NR4_MCNR_ALP0_REG 0x2dc1

Bit(s)	R/W	Default	Description
25	R/W	1	reg_nr4_alp0_fail_chk : // unsigned , default = 1 enable check for alp0 fail status
24	R/W	1	reg_nr4_bet0_coef_ref_en : // unsigned , default = 1 bet1 refinement by coef_blt
23:16	R/W	255	reg_nr4_alp0_posad_gain : // unsigned , default = 255 the sad (norm) gain for pixel pointed by MV;
9: 8	R/W	0	reg_nr4_alp0_norm_mode : // unsigned , default = 0 alp0 select sad norm mode, 0: disable, 1: enable dc norm, 2: enable ac norm, 3: enable both (dc/ac) norm, dft = 3
5: 0	R/W	16	reg_nr4_alp0_norm_gain : // unsigned , default = 16 alp0 gain for sad norm, '32' as '1', dft = 1

Amlogic Proprietary and Confidential
Copyright © Amlogic. All rights reserved.

Table 10-1281 NR4_MCNR_ALP1_AND_BET0_REG 0x2dc2

Bit(s)	R/W	Default	Description
25:24	R/W	3	reg_nr4_alp1_norm_mode : // unsigned , default = 3 alp1 select sad norm mode, 0: disable, 1: enable dc norm, 2: enable ac norm, 3: enable both (dc/ac) norm, dft = 3
21:16	R/W	3	reg_nr4_alp1_norm_gain : // unsigned , default = 3 alp1 gain for sad norm, '32' as '1', dft = 1
9: 8	R/W	3	reg_nr4_bet0_norm_mode : // unsigned , default = 3 bet0 select sad norm mode, 0: disable, 1: enable dc norm, 2: enable ac norm, 3: enable both (dc/ac) norm, dft = 3
5: 0	R/W	8	reg_nr4_bet0_norm_gain : // unsigned , default = 8 bet0 gain for sad norm, '32' as '1', dft = 1

Table 10-1282 NR4_MCNR_BET1_AND_BET2_REG 0x2dc3

Bit(s)	R/W	Default	Description
25:24	R/W	3	reg_nr4_bet1_norm_mode : // unsigned , default = 3 bet1 select sad norm mode, 0: disable, 1: enable dc norm, 2: enable ac norm, 3: enable both (dc/ac) norm, dft = 3
21:16	R/W	8	reg_nr4_bet1_norm_gain : // unsigned , default = 8 bet1 gain for sad norm, '32' as '1', dft = 1
9: 8	R/W	0	reg_nr4_bet2_norm_mode : // unsigned , default = 0 bet2 select sad norm mode, 0: disable, 1: enable dc norm, 2: enable ac norm, 3: enable both (dc/ac) norm, dft = 3
5: 0	R/W	16	reg_nr4_bet2_norm_gain : // unsigned , default = 16 bet2 gain for sad norm, '32' as '1', dft = 1

Table 10-1283 NR4_MCNR_AC_DC_CRTL 0x2dc4

Bit(s)	R/W	Default	Description
11	R/W	1	reg_nr4_dc_mode : // unsigned , default = 1 mode for dc selection,0: Y_lpf, 1: Y_lpf + (U_Lpf+V_lpf)/2,
10	R/W	1	reg_nr4_ac_mode : // unsigned , default = 1 mode for ac selection, 0: Y_abs_dif, 1: Y_abs_dif + (U_abs_dif + V_abs_dif)/2
9	R/W	0	reg_nr4_dc_sel : // unsigned , default = 0 selection mode for dc value, 0: 3x5, 1: 5x5, dft = 1
8	R/W	0	reg_nr4_ac_sel : // unsigned , default = 0 selection mode for ac value, 0: 3x5, 1: 5x5, dft = 1
6: 4	R/W	2	reg_nr4_dc_shft : // unsigned , default = 2 right shift for dc value, dft = 2
2: 0	R/W	0	reg_nr4_ac_shft : // unsigned , default = 0 right shift for ac value, dft = 2

Amlogic Proprietary and Confidential
Copyright © Amlogic. All rights reserved.

Table 10-1284 NR4_MCNR_CM_CTRL0 0x2dc5

Bit(s)	R/W	Default	Description
28	R/W	0	reg_nr4_cm_skin_prc_bet0 : // unsigned , default = 0 enable skin tone processing for mcnr bet0 calc., dft = 1
27:26	R/W	1	reg_nr4_cm_chrm_sel : // unsigned , default = 1 chrome selection for color match, 0: 1x1, 1: 3X3LPF, 2: 3x5LPF, 3: 5x5LPF for 5lines, 3x5LPF for 3lines, dft = 3
25:24	R/W	1	reg_nr4_cm_luma_sel : // unsigned , default = 1 luma selection for color match, 0: 1x1, 1: 3X3LPF, 2: 3x5LPF, 3: 5x5LPF for 5lines, 3x5LPF for 3lines, dft = 3
23:21	R/W	3	reg_nr4_cm_skin_rshft_bet0 : // unsigned , default = 3 right shift for bet0's skin color gains, dft = 3
20	R/W	1	reg_nr4_cm_var_sel : // unsigned , default = 1 variation selection for color match, 0: 3x5, 1: 5x5 for 5lines, 3x5 for 3lines, dft = 1
19	R/W	1	reg_nr4_cm_green_prc_bet0 : // unsigned , default = 1 enable green processing for mcnr bet0 calc., dft = 1
18:16	R/W	4	reg_nr4_cm_green_rshft_bet0 : // unsigned , default = 4 right shift for bet0's green color gains, dft = 4
15:14	R/W	2	reg_nr4_preflt_mod : // unsigned , default = 2 pre filter mode in mcnr, 0: mv pointed pixel, 1: bilater filter
13:12	R/W	1	reg_nr4_alp1_mode : // unsigned , default = 1 mode for alpha1's sad selection, 0: max sad, 1: three min sads, 2: min sad, 3: co sad
9: 8	R/W	0	reg_nr4_bet0_mode : // unsigned , default = 0 mode for bet0's sad selection, 0: max sad, 1: three min sads, 2: min sad, 3: co sad, else: (co sad) - (min sad)
5: 4	R/W	2	reg_nr4_bet1_mode : // unsigned , default = 2 mode for bet1's sad selection, 0: max sad, 1: three min sads, 2: min sad, 3: co sad, else: (co sad) - (min sad)
1: 0	R/W	1	reg_nr4_bet2_mode : // unsigned , default = 1 mode for bet2's sad selection, 0: max sad, 1: three min sads, 2: min sad, 3: co sad, else: (co sad) - (min sad)

Table 10-1285 NR4_MCNR_CM_PRAM 0x2dc6

Bit(s)	R/W	Default	Description
29	R/W	1	reg_nr4_cm_blue_prc_alp0 : // unsigned , default = 1 enable blue processing for mcnr alpha0 calc., dft = 1
28	R/W	1	reg_nr4_cm_blue_prc_alp1 : // unsigned , default = 1 enable blue processing for mcnr alpha1 calc., dft = 1
27	R/W	1	reg_nr4_cm_skin_prc_alp0 : // unsigned , default = 1 enable skin tone processing for mcnr alpha0 calc., dft = 1
26	R/W	1	reg_nr4_cm_green_prc_alp0 : // unsigned , default = 1 enable green processing for mcnr alpha0 clac., dft = 1
25	R/W	1	reg_nr4_cm_skin_prc_alp1 : // unsigned , default = 1 enable skin tone processing for mcnr alpha0 calc., dft = 1
24	R/W	1	reg_nr4_cm_green_prc_alp1 : // unsigned , default = 1 enable green processing for mcnr alpha1 clac., dft = 1
23:20	R/W	13	reg_nr4_cm_blue_hue_st : // unsigned , default = 13 hue start of blue, dft =
19:16	R/W	15	reg_nr4_cm_blue_hue_ed : // unsigned , default = 15 hue end of blue, dft =
15:12	R/W	7	reg_nr4_cm_green_hue_st : // unsigned , default = 7 hue start of green, dft =
11: 8	R/W	10	reg_nr4_cm_green_hue_ed : // unsigned , default = 10 hue end of green, dft =

Amlogic Proprietary and Confidential
Copyright © Amlogic. All rights reserved.

Bit(s)	R/W	Default	Description
7: 4	R/W	5	reg_nr4_cm_skin_hue_st : // unsigned , default = 5 hue start of skin, dft =
3: 0	R/W	6	reg_nr4_cm_skin_hue_ed : // unsigned , default = 6 hue end of skin, dft =

Table 10-1286 NR4_MCNR_CM_RSHFT_ALP0 0x2dc7

Bit(s)	R/W	Default	Description
27:25	R/W	5	reg_nr4_cm_blue_rshft_bet0 : // unsigned , default = 5 right shift for bet0's blue color gains, dft = 5
24	R/W	1	reg_nr4_cm_blue_prc_bet0 : // unsigned , default = 1 enable blue processing for mcnr bet0 calc., dft = 1
22:20	R/W	5	reg_nr4_cm_blue_rshft_alp0 : // unsigned , default = 5 right shift for alpha0/1's blue color gains, dft = 5
18:16	R/W	5	reg_nr4_cm_blue_rshft_alp1 : // unsigned , default = 5 right shift for alpha0/1's blue color gains, dft = 5
14:12	R/W	4	reg_nr4_cm_green_rshft_alp0 : // unsigned , default = 4 right shift for alpha0/1's green color gains, dft = 4
10: 8	R/W	4	reg_nr4_cm_green_rshft_alp1 : // unsigned , default = 4 right shift for alpha0/1's green color gains, dft = 4
6: 4	R/W	3	reg_nr4_cm_skin_rshft_alp0 : // unsigned , default = 3 right shift for alpha0/1's skin color gains, dft = 3
2: 0	R/W	3	reg_nr4_cm_skin_rshft_alp1 : // unsigned , default = 3 right shift for alpha0/1's skin color gains, dft = 3

Table 10-1287 NR4_MCNR_BLUE_CENT 0x2dc8

Bit(s)	R/W	Default	Description
23:16	R/W	157	reg_nr4_cm_blue_centx : // unsigned , default = 157 x coordinate of center of blue, dft =
7: 0	R/W	110	reg_nr4_cm_blue_centy : // unsigned , default = 110 y coordinate of center of blue, dft =

Table 10-1288 NR4_MCNR_BLUE_GAIN_PAR0 0x2dc9

Bit(s)	R/W	Default	Description
31:24	R/W	32	reg_nr4_cm_blue_gain_par0 : // unsigned , default = 32 par0 for blue gain, dft =
23:16	R/W	255	reg_nr4_cm_blue_gain_par1 : // unsigned , default = 255 par1 for blue gain, dft =
15: 8	R/W	4	reg_nr4_cm_blue_gain_par2 : // unsigned , default = 4 par2 for blue gain, dft =
7: 0	R/W	32	reg_nr4_cm_blue_gain_par3 : // unsigned , default = 32 par3 for blue gain, dft =

Amlogic Proprietary and Confidential
Copyright © Amlogic. All rights reserved.

Table 10-1289 NR4_MCNR_BLUE_GAIN_PAR1 0x2dca

Bit(s)	R/W	Default	Description
23:16	R/W	32	reg_nr4_cm_blue_gain_par4 : // unsigned , default = 32 par4 for blue gain, dft =
15: 8	R/W	32	reg_nr4_cm_blue_gain_par5 : // unsigned , default = 32 par5 for blue gain, dft =
7: 0	R/W	0	reg_nr4_cm_blue_gain_par6 : // unsigned , default = 0 par6 for blue gain, dft =

Table 10-1290 NR4_MCNR_CM_BLUE_CLIP0 0x2dcb

Bit(s)	R/W	Default	Description
23:16	R/W	40	reg_nr4_cm_blue_luma_min : // unsigned , default = 40 luma min for blue color matching, dft =
7: 0	R/W	180	reg_nr4_cm_blue_luma_max : // unsigned , default = 180 luma max for blue color matching, dft =

Table 10-1291 NR4_MCNR_CM_BLUE_CLIP1 0x2dcc

Bit(s)	R/W	Default	Description
31:24	R/W	5	reg_nr4_cm_blue_sat_min : // unsigned , default = 5 saturation min for blue color matching, dft =
23:16	R/W	255	reg_nr4_cm_blue_sat_max : // unsigned , default = 255 saturation max for blue color matching, dft =
15: 8	R/W	0	reg_nr4_cm_blue_var_min : // unsigned , default = 0 variation min for blue color matching, dft =
7: 0	R/W	12	reg_nr4_cm_blue_var_max : // unsigned , default = 12 variation max for blue color matching, dft =

Table 10-1292 NR4_MCNR_GREEN_CENT 0x2dcd

Bit(s)	R/W	Default	Description
23:16	R/W	114	reg_nr4_cm_green_centx : // unsigned , default = 114 x coordinate of center of green, dft =
7: 0	R/W	126	reg_nr4_cm_green_centy : // unsigned , default = 126 y coordinate of center of green, dft =

Table 10-1293 NR4_MCNR_GREEN_GAIN_PAR0 0x2dce

Bit(s)	R/W	Default	Description
31:24	R/W	16	reg_nr4_cm_green_gain_par0 : // unsigned , default = 16 par0 for green gain, dft =
23:16	R/W	255	reg_nr4_cm_green_gain_par1 : // unsigned , default = 255 par1 for green gain, dft =
15: 8	R/W	255	reg_nr4_cm_green_gain_par2 : // unsigned , default = 255 par2 for green gain, dft =
7: 0	R/W	16	reg_nr4_cm_green_gain_par3 : // unsigned , default = 16 par3 for green gain, dft =

Amlogic Proprietary and Confidential
Copyright © Amlogic. All rights reserved.

Table 10-1294 NR4_MCNR_GREEN_GAIN_PAR1 0x2dcf

Bit(s)	R/W	Default	Description
23:16	R/W	16	reg_nr4_cm_green_gain_par4 : // unsigned , default = 16 par4 for green gain, dft =
15: 8	R/W	128	reg_nr4_cm_green_gain_par5 : // unsigned , default = 128 par5 for green gain, dft =
7: 0	R/W	0	reg_nr4_cm_green_gain_par6 : // unsigned , default = 0 par6 for green gain, dft =

Table 10-1295 NR4_MCNR_GREEN_CLIP0 0x2dd0

Bit(s)	R/W	Default	Description
23:16	R/W	40	reg_nr4_cm_green_luma_min : // unsigned , default = 40 luma min for green color matching, dft =
7: 0	R/W	160	reg_nr4_cm_green_luma_max : // unsigned , default = 160 luma max for green color matching, dft =

Table 10-1296 NR4_MCNR_GREEN_CLIP2 0x2dd1

Bit(s)	R/W	Default	Description
31:24	R/W	4	reg_nr4_cm_green_sat_min : // unsigned , default = 4 saturation min for green color matching, dft =
23:16	R/W	255	reg_nr4_cm_green_sat_max : // unsigned , default = 255 saturation max for green color matching, dft =
15: 8	R/W	0	reg_nr4_cm_green_var_min : // unsigned , default = 0 variation min for green color matching, dft =
7: 0	R/W	12	reg_nr4_cm_green_var_max : // unsigned , default = 12 variation max for green color matching, dft =

Table 10-1297 NR4_MCNR_SKIN_CENT 0x2dd2

Bit(s)	R/W	Default	Description
23:16	R/W	112	reg_nr4_cm_skin_centx : // unsigned , default = 112 x coordinate of center of skin tone, dft =
7: 0	R/W	149	reg_nr4_cm_skin_centy : // unsigned , default = 149 y coordinate of center of skin tone, dft =

Table 10-1298 NR4_MCNR_SKIN_GAIN_PAR0 0x2dd3

Bit(s)	R/W	Default	Description
31:24	R/W	20	reg_nr4_cm_skin_gain_par0 : // unsigned , default = 20 par0 for skin gain, dft =
23:16	R/W	255	reg_nr4_cm_skin_gain_par1 : // unsigned , default = 255 par1 for skin gain, dft =
15: 8	R/W	255	reg_nr4_cm_skin_gain_par2 : // unsigned , default = 255 par2 for skin gain, dft =
7: 0	R/W	8	reg_nr4_cm_skin_gain_par3 : // unsigned , default = 8 par3 for skin gain, dft =

Amlogic Proprietary and Confidential
Copyright © Amlogic. All rights reserved.

Table 10-1299 NR4_MCNR_SKIN_GAIN_PAR1 0x2dd4

Bit(s)	R/W	Default	Description
23:16	R/W	8	reg_nr4_cm_skin_gain_par4 : // unsigned , default = 8 par4 for skin gain, dft =
15: 8	R/W	128	reg_nr4_cm_skin_gain_par5 : // unsigned , default = 128 par5 for skin gain, dft =
7: 0	R/W	0	reg_nr4_cm_skin_gain_par6 : // unsigned , default = 0 par6 for skin gain, dft =

Table 10-1300 NR4_MCNR_SKIN_CLIP0 0x2dd5

Bit(s)	R/W	Default	Description
23:16	R/W	40	reg_nr4_cm_skin_luma_min : // unsigned , default = 40 luma min for skin color matching, dft =
7: 0	R/W	180	reg_nr4_cm_skin_luma_max : // unsigned , default = 180 luma max for skin color matching, dft =

Table 10-1301 NR4_MCNR_SKIN_CLIP1 0x2dd6

Bit(s)	R/W	Default	Description
31:24	R/W	5	reg_nr4_cm_skin_sat_min : // unsigned , default = 5 saturation min for skin color matching, dft =
23:16	R/W	255	reg_nr4_cm_skin_sat_max : // unsigned , default = 255 saturation max for skin color matching, dft =
15: 8	R/W	0	reg_nr4_cm_skin_var_min : // unsigned , default = 0 variation min for skin color matching, dft =
7: 0	R/W	12	reg_nr4_cm_skin_var_max : // unsigned , default = 12 variation max for skin color matching, dft =

Table 10-1302 NR4_MCNR_ALP1_GLB_CTRL 0x2dd7

Bit(s)	R/W	Default	Description
31	R/W	0	reg_nr4_alp1_glb_gain_en : // unsigned , default = 0 alp1 adjust by global gain, dft = 1
30:28	R/W	6	reg_nr4_alp1_glb_gain_lsft : // unsigned , default = 6 alp1 left shift before combine with global gain
27	R/W	1	reg_nr4_bet0_glb_gain_en : // unsigned , default = 1 bet0 adjust by global gain, dft = 1
26:24	R/W	6	reg_nr4_bet0_glb_gain_lsft : // unsigned , default = 6 bet1 left shift before combine with global gain
23	R/W	0	reg_nr4_bet1_glb_gain_en : // unsigned , default = 0 bet1 adjust by global gain, dft = 0
22:20	R/W	6	reg_nr4_bet1_glb_gain_lsft : // unsigned , default = 6 bet1 left shift before combine with global gain
19	R/W	1	reg_nr4_bet2_glb_gain_en : // unsigned , default = 1 bet2 adjust by global gain, dft = 1
18:16	R/W	6	reg_nr4_bet2_glb_gain_lsft : // unsigned , default = 6 bet2 left shift before combine with global gain
15	R/W	1	reg_nr4_alp1_ac_en : // unsigned , default = 1 alp1 adjust by ac, dft = 1

Amlogic Proprietary and Confidential
Copyright © Amlogic. All rights reserved.

Bit(s)	R/W	Default	Description
14:12	R/W	5	reg_nr4_alp1_ac_lsft : // unsigned , default = 5 alp1 left shift before combine with ac
11	R/W	0	reg_nr4_bet0_ac_en : // unsigned , default = 0 bet0 adjust by ac, dft = 1
10: 8	R/W	5	reg_nr4_bet0_ac_lsft : // unsigned , default = 5 bet0 left shift before combine with ac
7	R/W	0	reg_nr4_bet1_ac_en : // unsigned , default = 0 bet1 adjust by ac, dft = 1
6: 4	R/W	5	reg_nr4_bet1_ac_lsft : // unsigned , default = 5 bet1 left shift before combine with ac
3	R/W	0	reg_nr4_bet2_ac_en : // unsigned , default = 0 bet2 adjust by ac, dft = 1
2: 0	R/W	5	reg_nr4_bet2_ac_lsft : // unsigned , default = 5 bet2 left shift before combine with ac

Table 10-1303 NR4_MCNR_DC2NORM_LUT0 0x2dd8

Bit(s)	R/W	Default	Description
28:24	R/W	16	reg_nr4_dc2norm_lut0 : // unsigned , default = 16 normal 0~16, dc to norm for alpha adjust, dft =
20:16	R/W	16	reg_nr4_dc2norm_lut1 : // unsigned , default = 16 normal 0~16, dc to norm for alpha adjust, dft =
12: 8	R/W	16	reg_nr4_dc2norm_lut2 : // unsigned , default = 16 normal 0~16, dc to norm for alpha adjust, dft =
4: 0	R/W	16	reg_nr4_dc2norm_lut3 : // unsigned , default = 16 normal 0~16, dc to norm for alpha adjust, dft =

Table 10-1304 NR4_MCNR_DC2NORM_LUT1 0x2dd9

Bit(s)	R/W	Default	Description
28:24	R/W	16	reg_nr4_dc2norm_lut4 : // unsigned , default = 16 normal 0~16, dc to norm for alpha adjust, dft =
20:16	R/W	16	reg_nr4_dc2norm_lut5 : // unsigned , default = 16 normal 0~16, dc to norm for alpha adjust, dft =
12: 8	R/W	16	reg_nr4_dc2norm_lut6 : // unsigned , default = 16 normal 0~16, dc to norm for alpha adjust, dft =
4: 0	R/W	12	reg_nr4_dc2norm_lut7 : // unsigned , default = 12 normal 0~16, dc to norm for alpha adjust, dft =

Table 10-1305 NR4_MCNR_DC2NORM_LUT2 0x2dda

Bit(s)	R/W	Default	Description
4: 0	R/W	8	reg_nr4_dc2norm_lut8 : // unsigned , default = 8 normal 0~16, dc to norm for alpha adjust, dft =

Amlogic Proprietary and Confidential
Copyright © Amlogic. All rights reserved.

Table 10-1306 NR4_MCNR_AC2NORM_LUT0 0x2ddb

Bit(s)	R/W	Default	Description
28:24	R/W	2	reg_nr4_ac2norm_lut0 : // unsigned , default = 2 normal 0~16, ac to norm for alpha adjust, dft =
20:16	R/W	16	reg_nr4_ac2norm_lut1 : // unsigned , default = 16 normal 0~16, ac to norm for alpha adjust, dft =
12: 8	R/W	16	reg_nr4_ac2norm_lut2 : // unsigned , default = 16 normal 0~16, ac to norm for alpha adjust, dft =
4: 0	R/W	12	reg_nr4_ac2norm_lut3 : // unsigned , default = 12 normal 0~16, ac to norm for alpha adjust, dft =

Table 10-1307 NR4_MCNR_AC2NORM_LUT1 0x2ddc

Bit(s)	R/W	Default	Description
28:24	R/W	4	reg_nr4_ac2norm_lut4 : // unsigned , default = 4 normal 0~16, ac to norm for alpha adjust, dft =
20:16	R/W	2	reg_nr4_ac2norm_lut5 : // unsigned , default = 2 normal 0~16, ac to norm for alpha adjust, dft =
12: 8	R/W	1	reg_nr4_ac2norm_lut6 : // unsigned , default = 1 normal 0~16, ac to norm for alpha adjust, dft =
4: 0	R/W	1	reg_nr4_ac2norm_lut7 : // unsigned , default = 1 normal 0~16, ac to norm for alpha adjust, dft =

Table 10-1308 NR4_MCNR_AC2NORM_LUT2 0x2ddd

Bit(s)	R/W	Default	Description
4: 0	R/W	1	reg_nr4_ac2norm_lut8 : // unsigned , default = 1 normal 0~16, ac to norm for alpha adjust, dft =

Table 10-1309 NR4_MCNR_SAD2ALP0_LUT0 0x2dde

Bit(s)	R/W	Default	Description
31:24	R/W	255	reg_nr4_sad2alp0_lut0 : // unsigned , default = 255 sad to alpha0 for temporal pixel value, dft = 255
23:16	R/W	252	reg_nr4_sad2alp0_lut1 : // unsigned , default = 252 sad to alpha0 for temporal pixel value, dft = 252
15: 8	R/W	249	reg_nr4_sad2alp0_lut2 : // unsigned , default = 249 sad to alpha0 for temporal pixel value, dft = 249
7: 0	R/W	235	reg_nr4_sad2alp0_lut3 : // unsigned , default = 235 sad to alpha0 for temporal pixel value, dft = 70

Amlogic Proprietary and Confidential
Copyright © Amlogic. All rights reserved.

Table 10-1310 NR4_MCNR_SAD2ALP0_LUT1 0x2ddf

Bit(s)	R/W	Default	Description
31:24	R/W	185	reg_nr4_sad2alp0_lut4 : // unsigned , default = 185 sad to alpha0 for temporal pixel value, dft = 12
23:16	R/W	70	reg_nr4_sad2alp0_lut5 : // unsigned , default = 70 sad to alpha0 for temporal pixel value, dft = 1
15: 8	R/W	14	reg_nr4_sad2alp0_lut6 : // unsigned , default = 14 sad to alpha0 for temporal pixel value, dft = 0
7: 0	R/W	1	reg_nr4_sad2alp0_lut7 : // unsigned , default = 1 sad to alpha0 for temporal pixel value, dft = 0

Table 10-1311 NR4_MCNR_SAD2ALP0_LUT2 0x2de0

Bit(s)	R/W	Default	Description
31:24	R/W	0	reg_nr4_sad2alp0_lut8 : // unsigned , default = 0 sad to alpha0 for temporal pixel value, dft = 0
23:16	R/W	0	reg_nr4_sad2alp0_lut9 : // unsigned , default = 0 sad to alpha0 for temporal pixel value, dft = 0
15: 8	R/W	0	reg_nr4_sad2alp0_lut10 : // unsigned , default = 0 sad to alpha0 for temporal pixel value, dft = 0
7: 0	R/W	0	reg_nr4_sad2alp0_lut11 : // unsigned , default = 0 sad to alpha0 for temporal pixel value, dft = 0

Table 10-1312 NR4_MCNR_SAD2ALP0_LUT3 0x2de1

Bit(s)	R/W	Default	Description
31:24	R/W	0	reg_nr4_sad2alp0_lut12 : // unsigned , default = 0 sad to alpha0 for temporal pixel value, dft = 0
23:16	R/W	0	reg_nr4_sad2alp0_lut13 : // unsigned , default = 0 sad to alpha0 for temporal pixel value, dft = 0
15: 8	R/W	0	reg_nr4_sad2alp0_lut14 : // unsigned , default = 0 sad to alpha0 for temporal pixel value, dft = 0
7: 0	R/W	0	reg_nr4_sad2alp0_lut15 : // unsigned , default = 0 sad to alpha0 for temporal pixel value, dft = 0

Table 10-1313 NR4_MCNR_SAD2ALP1_LUT0 0x2de2

Bit(s)	R/W	Default	Description
31:24	R/W	192	reg_nr4_sad2alp1_lut0 : // unsigned , default = 192 sad to alpha1 for temporal blending, dft = 128
23:16	R/W	160	reg_nr4_sad2alp1_lut1 : // unsigned , default = 160 sad to alpha1 for temporal blending, dft = 128
15: 8	R/W	128	reg_nr4_sad2alp1_lut2 : // unsigned , default = 128 sad to alpha1 for temporal blending, dft = 128
7: 0	R/W	96	reg_nr4_sad2alp1_lut3 : // unsigned , default = 96 sad to alpha1 for temporal blending, dft = 64

Amlogic Proprietary and Confidential
Copyright © Amlogic. All rights reserved.

Table 10-1314 NR4_MCNR_SAD2ALP1_LUT1 0x2de3

Bit(s)	R/W	Default	Description
31:24	R/W	64	reg_nr4_sad2alp1_lut4 : // unsigned , default = 64 sad to alpha1 for temporal blending, dft = 64
23:16	R/W	32	reg_nr4_sad2alp1_lut5 : // unsigned , default = 32 sad to alpha1 for temporal blending, dft = 128
15: 8	R/W	16	reg_nr4_sad2alp1_lut6 : // unsigned , default = 16 sad to alpha1 for temporal blending, dft = 255
7: 0	R/W	8	reg_nr4_sad2alp1_lut7 : // unsigned , default = 8 sad to alpha1 for temporal blending, dft = 255

Table 10-1315 NR4_MCNR_SAD2ALP1_LUT2 0x2de4

Bit(s)	R/W	Default	Description
31:24	R/W	4	reg_nr4_sad2alp1_lut8 : // unsigned , default = 4 sad to alpha1 for temporal blending, dft = 255
23:16	R/W	0	reg_nr4_sad2alp1_lut9 : // unsigned , default = 0 sad to alpha1 for temporal blending, dft = 255
15: 8	R/W	16	reg_nr4_sad2alp1_lut10 : // unsigned , default = 16 sad to alpha1 for temporal blending, dft = 255
7: 0	R/W	64	reg_nr4_sad2alp1_lut11 : // unsigned , default = 64 sad to alpha1 for temporal blending, dft = 255

Table 10-1316 NR4_MCNR_SAD2ALP1_LUT3 0x2de5

Bit(s)	R/W	Default	Description
31:24	R/W	96	reg_nr4_sad2alp1_lut12 : // unsigned , default = 96 sad to alpha1 for temporal blending, dft = 255
23:16	R/W	224	reg_nr4_sad2alp1_lut13 : // unsigned , default = 224 sad to alpha1 for temporal blending, dft = 255
15: 8	R/W	255	reg_nr4_sad2alp1_lut14 : // unsigned , default = 255 sad to alpha1 for temporal blending, dft = 255
7: 0	R/W	255	reg_nr4_sad2alp1_lut15 : // unsigned , default = 255 sad to alpha1 for temporal blending, dft = 255

Table 10-1317 NR4_MCNR_SAD2BET0_LUT0 0x2de6

Bit(s)	R/W	Default	Description
31:24	R/W	0	reg_nr4_sad2bet0_lut0 : // unsigned , default = 0 sad to beta0 for tnr and mcnr blending, dft = 0
23:16	R/W	2	reg_nr4_sad2bet0_lut1 : // unsigned , default = 2 sad to beta0 for tnr and mcnr blending, dft = 2
15: 8	R/W	4	reg_nr4_sad2bet0_lut2 : // unsigned , default = 4 sad to beta0 for tnr and mcnr blending, dft = 4
7: 0	R/W	8	reg_nr4_sad2bet0_lut3 : // unsigned , default = 8 sad to beta0 for tnr and mcnr blending, dft = 8

Amlogic Proprietary and Confidential
Copyright © Amlogic. All rights reserved.

Table 10-1318 NR4_MCNR_SAD2BET0_LUT1 0x2de7

Bit(s)	R/W	Default	Description
31:24	R/W	16	reg_nr4_sad2bet0_lut4 : // unsigned , default = 16 sad to beta0 for tnr and mcnr blending, dft = 16
23:16	R/W	32	reg_nr4_sad2bet0_lut5 : // unsigned , default = 32 sad to beta0 for tnr and mcnr blending, dft = 32
15: 8	R/W	48	reg_nr4_sad2bet0_lut6 : // unsigned , default = 48 sad to beta0 for tnr and mcnr blending, dft = 48
7: 0	R/W	64	reg_nr4_sad2bet0_lut7 : // unsigned , default = 64 sad to beta0 for tnr and mcnr blending, dft = 64

Table 10-1319 NR4_MCNR_SAD2BET0_LUT2 0x2de8

Bit(s)	R/W	Default	Description
31:24	R/W	80	reg_nr4_sad2bet0_lut8 : // unsigned , default = 80 sad to beta0 for tnr and mcnr blending, dft = 80
23:16	R/W	96	reg_nr4_sad2bet0_lut9 : // unsigned , default = 96 sad to beta0 for tnr and mcnr blending, dft = 96
15: 8	R/W	112	reg_nr4_sad2bet0_lut10 : // unsigned , default = 112 sad to beta0 for tnr and mcnr blending, dft = 112
7: 0	R/W	128	reg_nr4_sad2bet0_lut11 : // unsigned , default = 128 sad to beta0 for tnr and mcnr blending, dft = 128

Table 10-1320 NR4_MCNR_SAD2BET0_LUT3 0x2de9

Bit(s)	R/W	Default	Description
31:24	R/W	196	reg_nr4_sad2bet0_lut12 : // unsigned , default = 196 sad to beta0 for tnr and mcnr blending, dft = 160
23:16	R/W	224	reg_nr4_sad2bet0_lut13 : // unsigned , default = 224 sad to beta0 for tnr and mcnr blending, dft = 192
15: 8	R/W	255	reg_nr4_sad2bet0_lut14 : // unsigned , default = 255 sad to beta0 for tnr and mcnr blending, dft = 224
7: 0	R/W	255	reg_nr4_sad2bet0_lut15 : // unsigned , default = 255 sad to beta0 for tnr and mcnr blending, dft = 255

Table 10-1321 NR4_MCNR_SAD2BET1_LUT0 0x2dea

Bit(s)	R/W	Default	Description
31:24	R/W	0	reg_nr4_sad2bet1_lut0 : // unsigned , default = 0 sad to beta1 for deghost blending, dft = 0
23:16	R/W	2	reg_nr4_sad2bet1_lut1 : // unsigned , default = 2 sad to beta1 for deghost blending, dft = 2
15: 8	R/W	4	reg_nr4_sad2bet1_lut2 : // unsigned , default = 4 sad to beta1 for deghost blending, dft = 4
7: 0	R/W	8	reg_nr4_sad2bet1_lut3 : // unsigned , default = 8 sad to beta1 for deghost blending, dft = 8

Amlogic Proprietary and Confidential
Copyright © Amlogic. All rights reserved.

Table 10-1322 NR4_MCNR_SAD2BET1_LUT1 0x2deb

Bit(s)	R/W	Default	Description
31:24	R/W	16	reg_nr4_sad2bet1_lut4 : // unsigned , default = 16 sad to beta1 for deghost blending, dft = 16
23:16	R/W	32	reg_nr4_sad2bet1_lut5 : // unsigned , default = 32 sad to beta1 for deghost blending, dft = 32
15: 8	R/W	48	reg_nr4_sad2bet1_lut6 : // unsigned , default = 48 sad to beta1 for deghost blending, dft = 48
7: 0	R/W	64	reg_nr4_sad2bet1_lut7 : // unsigned , default = 64 sad to beta1 for deghost blending, dft = 64

Table 10-1323 NR4_MCNR_SAD2BET1_LUT2 0x2dec

Bit(s)	R/W	Default	Description
31:24	R/W	80	reg_nr4_sad2bet1_lut8 : // unsigned , default = 80 sad to beta1 for deghost blending, dft = 80
23:16	R/W	96	reg_nr4_sad2bet1_lut9 : // unsigned , default = 96 sad to beta1 for deghost blending, dft = 96
15: 8	R/W	112	reg_nr4_sad2bet1_lut10 : // unsigned , default = 112 sad to beta1 for deghost blending, dft = 112
7: 0	R/W	128	reg_nr4_sad2bet1_lut11 : // unsigned , default = 128 sad to beta1 for deghost blending, dft = 128

Table 10-1324 NR4_MCNR_SAD2BET1_LUT3 0x2ded

Bit(s)	R/W	Default	Description
31:24	R/W	160	reg_nr4_sad2bet1_lut12 : // unsigned , default = 160 sad to beta1 for deghost blending, dft = 160
23:16	R/W	192	reg_nr4_sad2bet1_lut13 : // unsigned , default = 192 sad to beta1 for deghost blending, dft = 192
15: 8	R/W	224	reg_nr4_sad2bet1_lut14 : // unsigned , default = 224 sad to beta1 for deghost blending, dft = 224
7: 0	R/W	255	reg_nr4_sad2bet1_lut15 : // unsigned , default = 255 sad to beta1 for deghost blending, dft = 255

Table 10-1325 NR4_MCNR_SAD2BET2_LUT0 0x2dee

Bit(s)	R/W	Default	Description
31:24	R/W	0	reg_nr4_sad2bet2_lut0 : // unsigned , default = 0 sad to beta2 for snr and mcnr blending, dft = 0
23:16	R/W	1	reg_nr4_sad2bet2_lut1 : // unsigned , default = 1 sad to beta2 for snr and mcnr blending, dft = 2
15: 8	R/W	2	reg_nr4_sad2bet2_lut2 : // unsigned , default = 2 sad to beta2 for snr and mcnr blending, dft = 4
7: 0	R/W	4	reg_nr4_sad2bet2_lut3 : // unsigned , default = 4 sad to beta2 for snr and mcnr blending, dft = 8

Amlogic Proprietary and Confidential
Copyright © Amlogic. All rights reserved.

Table 10-1326 NR4_MCNR_SAD2BET2_LUT1 0x2def

Bit(s)	R/W	Default	Description
31:24	R/W	8	reg_nr4_sad2bet2_lut4 : // unsigned , default = 8 sad to beta2 for snr and mcnr blending, dft = 16
23:16	R/W	16	reg_nr4_sad2bet2_lut5 : // unsigned , default = 16 sad to beta2 for snr and mcnr blending, dft = 32
15: 8	R/W	32	reg_nr4_sad2bet2_lut6 : // unsigned , default = 32 sad to beta2 for snr and mcnr blending, dft = 48
7: 0	R/W	48	reg_nr4_sad2bet2_lut7 : // unsigned , default = 48 sad to beta2 for snr and mcnr blending, dft = 64

Table 10-1327 NR4_MCNR_SAD2BET2_LUT2 0x2df0

Bit(s)	R/W	Default	Description
31:24	R/W	64	reg_nr4_sad2bet2_lut8 : // unsigned , default = 64 sad to beta2 for snr and mcnr blending, dft = 80
23:16	R/W	80	reg_nr4_sad2bet2_lut9 : // unsigned , default = 80 sad to beta2 for snr and mcnr blending, dft = 96
15: 8	R/W	96	reg_nr4_sad2bet2_lut10 : // unsigned , default = 96 sad to beta2 for snr and mcnr blending, dft = 112
7: 0	R/W	112	reg_nr4_sad2bet2_lut11 : // unsigned , default = 112 sad to beta2 for snr and mcnr blending, dft = 128

Table 10-1328 NR4_MCNR_SAD2BET2_LUT3 0x2df1

Bit(s)	R/W	Default	Description
31:24	R/W	128	reg_nr4_sad2bet2_lut12 : // unsigned , default = 128 sad to beta2 for snr and mcnr blending, dft = 160
23:16	R/W	160	reg_nr4_sad2bet2_lut13 : // unsigned , default = 160 sad to beta2 for snr and mcnr blending, dft = 192
15: 8	R/W	224	reg_nr4_sad2bet2_lut14 : // unsigned , default = 224 sad to beta2 for snr and mcnr blending, dft = 224
7: 0	R/W	255	reg_nr4_sad2bet2_lut15 : // unsigned , default = 255 sad to beta2 for snr and mcnr blending, dft = 255

Table 10-1329 NR4_MCNR_RO_U_SUM 0x2df2

Bit(s)	R/W	Default	Description
31: 0	R.O	0	ro_nr4_u_sum : // unsigned , default = 0 sum of U of current field/frame

Table 10-1330 NR4_MCNR_RO_V_SUM 0x2df3

Bit(s)	R/W	Default	Description
31: 0	R.O	0	ro_nr4_v_sum : // unsigned , default = 0 sum of V of current field/frame

Amlogic Proprietary and Confidential
Copyright © Amlogic. All rights reserved.

Table 10-1331 NR4_MCNR_RO_GRDU_SUM 0x2df4

Bit(s)	R/W	Default	Description
31: 0	R.O	0	ro_nr4_grdu_sum : // unsigned , default = 0 sum of gradient U of current field/ frame

Table 10-1332 NR4_MCNR_RO_GRDV_SUM 0x2df5

Bit(s)	R/W	Default	Description
31: 0	R.O	0	ro_nr4_grdv_sum : // unsigned , default = 0 sum of gradient V of current field/ frame

Table 10-1333 NR4_TOP_CTRL 0x2dff

Bit(s)	R/W	Default	Description
31-20	W/R	0	reg_gclk_ctrl
19	W/R	0	reg_text_en (tm2_revb : DI_MTN_CTRL 0x170b, bit29)
18	W/R	0	reg_nr4_mcnr_en
17	W/R	0	reg_nr2_en
16	W/R	0	reg_nr4_en
15	W/R	0	reg_nr2_proc_en
14	W/R	0	reg_det3d_en
13	W/R	0	di_polar_en
12	W/R	0	reg_cfr_enable
11-9	W/R	0	reg_3dnr_en_l
8-6	W/R	0	reg_3dnr_en_r
5	W/R	0	reg_nr4_inbuf_ctrl
4	W/R	0	reg_nr4_snr2_en
3	W/R	0	reg_nr4_scene_change_en
2	W/R	0	nr2_sw_en
1	W/R	0	reg_cure_en tm2_revb: DI_NR_CTRL0□0x1707, bit26
0	W/R	0	reg_nr4_scene_change_flg

Table 10-1334 NR4_MCNR_SAD_GAIN 0x3700

Bit(s)	R/W	Default	Description
24	R/W	0	reg_nr4_bld12vs3_usemaxsad : // unsigned , default = 0 use minsad/maxsad instead of minsad/avgsad to decision if it was texture or flat region, 1: use minsad/ maxsad
23:16	R/W	64	reg_nr4_bld12vs3_rate_gain : // unsigned , default = 64 gain to minsad/maxsad or minsad/avgsad before LUT, 64 normalized as "1"

Amlogic Proprietary and Confidential
Copyright © Amlogic. All rights reserved.

Bit(s)	R/W	Default	Description
15: 8	R/W	32	reg_nr4_bld1vs2_rate_gain : // unsigned , default = 32 gain to minsad/maxsad or minsad/avgsad before the LUT, 64 normalized as"1"
7: 0	R/W	64	reg_nr4_coefblt_gain : // unsigned , default = 64 gain to final coefblt, normalized 64 as "1"

Table 10-1335 NR4_MCNR_LPF_CTRL 0x3701

Bit(s)	R/W	Default	Description
30:22	R/W	0	reg_nr4_preflt_alpofst : // signed , default = 0 pre filter alpha ofst
21:16	R/W	16	reg_nr4_preflt_alpgain : // unsigned , default = 16 pre filter alpha gain
15:14	R/W	3	reg_nr4_preflt_alpsel : // unsigned , default = 3 pre filter alpha selection for adaptive blending, 0: mv pointed sad, 1: weighted mv pointed sad, 2or3: coefblt
13: 8	R/W	8	reg_nr4_avgsad_gain : // unsigned , default = 8 gain for avg sad before luts
6	R/W	1	reg_nr4_maxsad_mod : // unsigned , default = 1 max sad select mode, 0: mx2_ sad, 1: max sad
5	R/W	1	reg_nr4_minsad_mod : // unsigned , default = 1 min sad select mode, 0: sad with min err, 1: min sad
4	R/W	1	reg_nr4_minmaxsad_lpf : // unsigned , default = 1 mode of lpf for minmaxsad, 0: no LPF, 1: [1 2 1]/4
3	R/W	1	reg_nr4_avgsad_lpf : // unsigned , default = 1 mode of lpf for avgsad, 0: no LPF, 1: [1 2 1]/4
2	R/W	1	reg_nr4_minavgsad_ratio_lpf : // unsigned , default = 1 mode of lpf for minsad/ avgsad and zmvsad/avgsad, 0: no LPF, 1: [1 2 1]/4
1	R/W	1	reg_nr4_bldvs_lut_lpf : // unsigned , default = 1 mode of lpf for bld12vs3 and bld1vs2 LUT results, 0: no LPF, 1: [1 2 1]/4
0	R/W	1	reg_nr4_final_coef_lpf : // unsigned , default = 1 mode of lpf for final coef_blt_ blend123, 0: no LPF, 1: [1 2 1]/4

Table 10-1336 NR4_MCNR_BLD_VS3LUT0 0x3702

Bit(s)	R/W	Default	Description
29:24	R/W	0	reg_nr4_bld12vs3_lut0 : // unsigned , default = 0
21:16	R/W	8	reg_nr4_bld12vs3_lut1 : // unsigned , default = 8
13: 8	R/W	10	reg_nr4_bld12vs3_lut2 : // unsigned , default = 10
5: 0	R/W	11	reg_nr4_bld12vs3_lut3 : // unsigned , default = 11

Table 10-1337 NR4_MCNR_BLD_VS3LUT1 0x3703

Bit(s)	R/W	Default	Description
29:24	R/W	12	reg_nr4_bld12vs3_lut4 : // unsigned , default = 12
21:16	R/W	14	reg_nr4_bld12vs3_lut5 : // unsigned , default = 14
13: 8	R/W	16	reg_nr4_bld12vs3_lut6 : // unsigned , default = 16
5: 0	R/W	24	reg_nr4_bld12vs3_lut7 : // unsigned , default = 24

Amlogic Proprietary and Confidential
Copyright © Amlogic. All rights reserved.

Table 10-1338 NR4_MCNR_BLD_VS3LUT2 0x3704

Bit(s)	R/W	Default	Description
29:24	R/W	50	reg_nr4_bld12vs3_lut8 : // unsigned , default = 50
21:16	R/W	58	reg_nr4_bld12vs3_lut9 : // unsigned , default = 58
13: 8	R/W	63	reg_nr4_bld12vs3_lut10 : // unsigned , default = 63
5: 0	R/W	63	reg_nr4_bld12vs3_lut11 : // unsigned , default = 63

Table 10-1339 NR4_MCNR_BLD_VS2LUT0 0x3705

Bit(s)	R/W	Default	Description
29:24	R/W	63	reg_nr4_bld1vs2_lut0 : // unsigned , default = 63
21:16	R/W	32	reg_nr4_bld1vs2_lut1 : // unsigned , default = 32
13: 8	R/W	16	reg_nr4_bld1vs2_lut2 : // unsigned , default = 16
5: 0	R/W	8	reg_nr4_bld1vs2_lut3 : // unsigned , default = 8

Table 10-1340 NR4_MCNR_BLD_VS2LUT1 0x3706

Bit(s)	R/W	Default	Description
29:24	R/W	4	reg_nr4_bld1vs2_lut4 : // unsigned , default = 4
21:16	R/W	2	reg_nr4_bld1vs2_lut5 : // unsigned , default = 2
13: 8	R/W	1	reg_nr4_bld1vs2_lut6 : // unsigned , default = 1
5: 0	R/W	0	reg_nr4_bld1vs2_lut7 : // unsigned , default = 0

Table 10-1341 NR4_COEFBLT_LUT10 0x3707

Bit(s)	R/W	Default	Description
31:24	R/W	0x0	reg_nr4_coefblt_lut10 : // signed , default = -128
23:16	R/W	0x0	reg_nr4_coefblt_lut11 : // signed , default = -128
15: 8	R/W	0x0	reg_nr4_coefblt_lut12 : // signed , default = -126
7: 0	R/W	0x0	reg_nr4_coefblt_lut13 : // signed , default = -124

Table 10-1342 NR4_COEFBLT_LUT11 0x3708

Bit(s)	R/W	Default	Description
31:24	R/W	0x0	reg_nr4_coefblt_lut14 : // signed , default = -120
23:16	R/W	0x0	reg_nr4_coefblt_lut15 : // signed , default = -110
15: 8	R/W	0x0	reg_nr4_coefblt_lut16 : // signed , default = -100
7: 0	R/W	0x0	reg_nr4_coefblt_lut17 : // signed , default = -90

Amlogic Proprietary and Confidential
Copyright © Amlogic. All rights reserved.

Table 10-1343 NR4_COEFBLT_LUT12 0x3709

Bit(s)	R/W	Default	Description
31:24	R/W	0x0	reg_nr4_coefblt_lut18 : // signed , default = -56
23:16	R/W	0x0	reg_nr4_coefblt_lut19 : // signed , default = -32
15: 8	R/W	0x0	reg_nr4_coefblt_lut110 : // signed , default = -64
7: 0	R/W	0x0	reg_nr4_coefblt_lut111 : // signed , default = -128

Table 10-1344 NR4_COEFBLT_LUT20 0x370a

Bit(s)	R/W	Default	Description
31:24	R/W	0x0	reg_nr4_coefblt_lut20 : // signed , default = -128
23:16	R/W	0x0	reg_nr4_coefblt_lut21 : // signed , default = -120
15: 8	R/W	0x0	reg_nr4_coefblt_lut22 : // signed , default = -112
7: 0	R/W	0x0	reg_nr4_coefblt_lut23 : // signed , default = -104

Table 10-1345 NR4_COEFBLT_LUT21 0x370b

Bit(s)	R/W	Default	Description
31:24	R/W	0x0	reg_nr4_coefblt_lut24 : // signed , default = -96
23:16	R/W	0x0	reg_nr4_coefblt_lut25 : // signed , default = -88
15: 8	R/W	0x0	reg_nr4_coefblt_lut26 : // signed , default = -76
7: 0	R/W	0x0	reg_nr4_coefblt_lut27 : // signed , default = -64

Table 10-1346 NR4_COEFBLT_LUT22 0x370c

Bit(s)	R/W	Default	Description
31:24	R/W	0x0	reg_nr4_coefblt_lut28 : // signed , default = -48
23:16	R/W	0x0	reg_nr4_coefblt_lut29 : // signed , default = -32
15: 8	R/W	0x0	reg_nr4_coefblt_lut210 : // signed , default = -64
7: 0	R/W	0x0	reg_nr4_coefblt_lut211 : // signed , default = -108

Table 10-1347 NR4_COEFBLT_LUT30 0x370d

Bit(s)	R/W	Default	Description
31:24	R/W	8	reg_nr4_coefblt_lut30 : // signed , default = 8
23:16	R/W	16	reg_nr4_coefblt_lut31 : // signed , default = 16
15: 8	R/W	24	reg_nr4_coefblt_lut32 : // signed , default = 24
7: 0	R/W	30	reg_nr4_coefblt_lut33 : // signed , default = 30

Amlogic Proprietary and Confidential
Copyright © Amlogic. All rights reserved.

Table 10-1348 NR4_COEFBLT_LUT31 0x370e

Bit(s)	R/W	Default	Description
31:24	R/W	36	reg_nr4_coefblt_lut34 : // signed , default = 36
23:16	R/W	48	reg_nr4_coefblt_lut35 : // signed , default = 48
15: 8	R/W	70	reg_nr4_coefblt_lut36 : // signed , default = 70
7: 0	R/W	96	reg_nr4_coefblt_lut37 : // signed , default = 96

Table 10-1349 NR4_COEFBLT_LUT32 0x370f

Bit(s)	R/W	Default	Description
31:24	R/W	120	reg_nr4_coefblt_lut38 : // signed , default = 120
23:16	R/W	64	reg_nr4_coefblt_lut39 : // signed , default = 64
15: 8	R/W	16	reg_nr4_coefblt_lut310 : // signed , default = 16
7: 0	R/W	0x0	reg_nr4_coefblt_lut311 : // signed , default = -8

Table 10-1350 NR4_COEFBLT_CONV 0x3710

Bit(s)	R/W	Default	Description
23:16	R/W	0	reg_nr4_coefblt_convmin : // unsigned , default = 0 minimum of coef. bilateral conversion
15: 8	R/W	255	reg_nr4_coefblt_convmax : // unsigned , default = 255 maximum of coef. bilateral conversion
7: 0	R/W	128	reg_nr4_coefblt_convmid : // unsigned , default = 128 value at midpoint of coef. bilateral conversion

Table 10-1351 NR4_DBGWIN_YX0 0x3711

Bit(s)	R/W	Default	Description
29:16	R/W	100	reg_nr4_dgbwin_yx0 : // unsigned , default = 100 ystart for debug window
13: 0	R/W	160	reg_nr4_dgbwin_yx1 : // unsigned , default = 160 yend for debug window

Table 10-1352 NR4_DBGWIN_YX1 0x3712

Bit(s)	R/W	Default	Description
29:16	R/W	200	reg_nr4_dgbwin_yx2 : // unsigned , default = 200 xstart for debug window
13: 0	R/W	300	reg_nr4_dgbwin_yx3 : // unsigned , default = 300 xend for debug window

Table 10-1353 NR4_NM_X_CFG 0x3713

Bit(s)	R/W	Default	Description
29:16	R/W	8	reg_nr4_nm_xst : // unsigned , default = 8 start for noise meter statistic, dft = 8
13: 0	R/W	711	reg_nr4_nm_xed : // unsigned , default = 711 end for noise meter statistic, dft = HSIZE-8-1;

Amlogic Proprietary and Confidential
Copyright © Amlogic. All rights reserved.

Table 10-1354 NR4_NM_Y_CFG 0x3714

Bit(s)	R/W	Default	Description
29:16	R/W	8	reg_nr4_nm_yst : // unsigned , default = 8 start for noise meter statistic, dft = 8;
13: 0	R/W	231	reg_nr4_nm_yed : // unsigned , default = 231 end for noise meter statistic, dft = VSIZE-8-1;

Table 10-1355 NR4_NM_SAD_THD 0x3715

Bit(s)	R/W	Default	Description
7: 0	R/W	255	reg_nr4_nm_sad_thd : // unsigned , default = 255 threshold for (flat region) sad count, dft = 4

Table 10-1356 NR4_MCNR_BANDSPLIT_PRAM 0x3716

Bit(s)	R/W	Default	Description
4	R/W	1	reg_nr4_mc_use_bandsplit : // unsigned , default = 1 separate lp and us for mc IIR filter, 0: no BS used; 1: use BS
3	R/W	1	reg_nr4_mc_apply_on_lp : // unsigned , default = 1 use mcnr only on lowpass portion;
2	R/W	1	reg_nr4_mc_apply_on_us : // unsigned , default = 1 use mcnr only on lp complimentary portion;
1: 0	R/W	1	reg_nr4_mc_zmvbs_use_adplpf : // unsigned , default = 1 use adapptive LPF for the zmv pointing data for MCNR, for abs(mvx)<th

Table 10-1357 NR4_MCNR_ALP1_SGN_COR 0x3717

Bit(s)	R/W	Default	Description
31:24	R/W	10	reg_nr4_mc_aph1_sgn_coring0 : // unsigned , default = 10 coring to cur-pre before do sgn decision
23:16	R/W	7	reg_nr4_mc_aph1_sgn_coring1 : // unsigned , default = 7 coring to cur-pre before do sgn decision
15: 8	R/W	90	reg_nr4_mc_aph1_sgn_core_max0 : // unsigned , default = 90 maximum of coring, default = 30/15
7: 0	R/W	15	reg_nr4_mc_aph1_sgn_core_max1 : // unsigned , default = 15 maximum of coring, default = 30/15

Table 10-1358 NR4_MCNR_ALP1_SGN_PRAM 0x3718

Bit(s)	R/W	Default	Description
10	R/W	1	reg_nr4_mc_alp1_sgn_half : // unsigned , default = 1 half block sgn sum mode enable, 0: only use 3x5 whole block sum of sgns; 1: use max(sgn_3x5, sqrt(sgn_left+sgn_righ))
9	R/W	1	reg_nr4_mc_alp1_sgn_frczmv : // unsigned , default = 1 force zmv to calculate the sign_sum;
8	R/W	1	reg_nr4_mc_alp1_sgnmvx_mode : // unsigned , default = 1 blend mode of sgnlut and mvxlut blend mode: 0: sgnlut+ mvxlut; 1: max(sgnlut, mvxlut), default =1

Amlogic Proprietary and Confidential
Copyright © Amlogic. All rights reserved.

Bit(s)	R/W	Default	Description
7: 4	R/W	4	reg_nr4_mc_aph1_sgn_crate0 : // unsigned , default = 4 rate to var, norm to 16 as 1, default = 2
3: 0	R/W	2	reg_nr4_mc_aph1_sgn_crate1 : // unsigned , default = 2 rate to var, norm to 16 as 1, default = 2

Table 10-1359 NR4_MCNR_ALP1_MVX_LUT1 0x3719

Bit(s)	R/W	Default	Description
31:28	R/W	14	reg_nr4_mc_alp1_mvx_luty3 : // unsigned , default = 14 alp1 of luma vas mvx (0~7), and alp1 vs mvy(0,1)
27:24	R/W	14	reg_nr4_mc_alp1_mvx_lutc3 : // unsigned , default = 14 alp1 of chrm vas mvx (0~7), and alp1 vs mvy(0,1)
23:20	R/W	12	reg_nr4_mc_alp1_mvx_luty2 : // unsigned , default = 12 alp1 of luma vas mvx (0~7), and alp1 vs mvy(0,1)
19:16	R/W	12	reg_nr4_mc_alp1_mvx_lutc2 : // unsigned , default = 12 alp1 of chrm vas mvx (0~7), and alp1 vs mvy(0,1)
15:12	R/W	5	reg_nr4_mc_alp1_mvx_luty1 : // unsigned , default = 5 alp1 of luma vas mvx (0~7), and alp1 vs mvy(0,1)
11: 8	R/W	5	reg_nr4_mc_alp1_mvx_lutc1 : // unsigned , default = 5 alp1 of chrm vas mvx (0~7), and alp1 vs mvy(0,1)
7: 4	R/W	3	reg_nr4_mc_alp1_mvx_luty0 : // unsigned , default = 3 alp1 of luma vas mvx (0~7), and alp1 vs mvy(0,1)
3: 0	R/W	3	reg_nr4_mc_alp1_mvx_lutc0 : // unsigned , default = 3 alp1 of chrm vas mvx (0~7), and alp1 vs mvy(0,1)

Table 10-1360 NR4_MCNR_ALP1_MVX_LUT2 0x371a

Bit(s)	R/W	Default	Description
31:28	R/W	15	reg_nr4_mc_alp1_mvx_luty7 : // unsigned , default = 15 alp1 of luma vas mvx (0~7), and alp1 vs mvy(0,1)
27:24	R/W	15	reg_nr4_mc_alp1_mvx_lutc7 : // unsigned , default = 15 alp1 of chrm vas mvx (0~7), and alp1 vs mvy(0,1)
23:20	R/W	15	reg_nr4_mc_alp1_mvx_luty6 : // unsigned , default = 15 alp1 of luma vas mvx (0~7), and alp1 vs mvy(0,1)
19:16	R/W	15	reg_nr4_mc_alp1_mvx_lutc6 : // unsigned , default = 15 alp1 of chrm vas mvx (0~7), and alp1 vs mvy(0,1)
15:12	R/W	15	reg_nr4_mc_alp1_mvx_luty5 : // unsigned , default = 15 alp1 of luma vas mvx (0~7), and alp1 vs mvy(0,1)
11: 8	R/W	15	reg_nr4_mc_alp1_mvx_lutc5 : // unsigned , default = 15 alp1 of chrm vas mvx (0~7), and alp1 vs mvy(0,1)
7: 4	R/W	15	reg_nr4_mc_alp1_mvx_luty4 : // unsigned , default = 15 alp1 of luma vas mvx (0~7), and alp1 vs mvy(0,1)
3: 0	R/W	15	reg_nr4_mc_alp1_mvx_lutc4 : // unsigned , default = 15 alp1 of chrm vas mvx (0~7), and alp1 vs mvy(0,1)

Amlogic Proprietary and Confidential
Copyright © Amlogic. All rights reserved.

Table 10-1361 NR4_MCNR_ALP1_MVX_LUT3 0x371b

Bit(s)	R/W	Default	Description
7: 4	R/W	6	reg_nr4_mc_alp1_mvx_luty8 : // unsigned , default = 6 alp1 of luma vas mvx (0~7), and alp1 vs mvy(0,1)
3: 0	R/W	6	reg_nr4_mc_alp1_mvx_lutc8 : // unsigned , default = 6 alp1 of chrm vas mvx (0~7), and alp1 vs mvy(0,1)

Table 10-1362 NR4_MCNR_ALP1_LP_PRAM 0x371c

Bit(s)	R/W	Default	Description
17:16	R/W	1	reg_nr4_mc_alp1_lp_sel : // unsigned , default = 1 mode for alp1_lp for lp portion IIR, 0: apha1, 1:dc_dif vs ac analysis; 2: gain/ofst of alp1; 3: max of 1/ 2 results
15: 8	R/W	64	reg_nr4_mc_alp1_lp_gain : // unsigned , default = 64 gain to alp1 to get the alp1_lp = alp1*gain/32 + ofset, default =64;
7: 0	R/W	0	reg_nr4_mc_alp1_lp_ofst : // signed , default = 0 offset to alp1 to get the alp1_lp = alp1*gain/32 + ofset, default =10;

Table 10-1363 NR4_MCNR_ALP1_SGN_LUT1 0x371d

Bit(s)	R/W	Default	Description
31:28	R/W	3	reg_nr4_mc_alp1_sgn_lut0 : // unsigned , default = 3 alp1 vs x=abs|sgn(cur-pre)|, if x is small, less possibility of flat region move
27:24	R/W	3	reg_nr4_mc_alp1_sgn_lut1 : // unsigned , default = 3 alp1 vs x=abs|sgn(cur-pre)|, if x is small, less possibility of flat region move
23:20	R/W	3	reg_nr4_mc_alp1_sgn_lut2 : // unsigned , default = 3 alp1 vs x=abs|sgn(cur-pre)|, if x is small, less possibility of flat region move
19:16	R/W	4	reg_nr4_mc_alp1_sgn_lut3 : // unsigned , default = 4 alp1 vs x=abs|sgn(cur-pre)|, if x is small, less possibility of flat region move
15:12	R/W	5	reg_nr4_mc_alp1_sgn_lut4 : // unsigned , default = 5 alp1 vs x=abs|sgn(cur-pre)|, if x is small, less possibility of flat region move
11: 8	R/W	6	reg_nr4_mc_alp1_sgn_lut5 : // unsigned , default = 6 alp1 vs x=abs|sgn(cur-pre)|, if x is small, less possibility of flat region move
7: 4	R/W	7	reg_nr4_mc_alp1_sgn_lut6 : // unsigned , default = 7 alp1 vs x=abs|sgn(cur-pre)|, if x is small, less possibility of flat region move
3: 0	R/W	8	reg_nr4_mc_alp1_sgn_lut7 : // unsigned , default = 8 alp1 vs x=abs|sgn(cur-pre)|, if x is small, less possibility of flat region move

Table 10-1364 NR4_MCNR_ALP1_SGN_LUT2 0x371e

Bit(s)	R/W	Default	Description
31:28	R/W	9	reg_nr4_mc_alp1_sgn_lut8 : // unsigned , default = 9 alp1 vs x=abs|sgn(cur-pre)|, if x is small, less possibility of flat region move
27:24	R/W	10	reg_nr4_mc_alp1_sgn_lut9 : // unsigned , default = 10 alp1 vs x=abs|sgn(cur-pre)|, if x is small, less possibility of flat region move
23:20	R/W	11	reg_nr4_mc_alp1_sgn_lut10 : // unsigned , default = 11 alp1 vs x=abs|sgn(cur-pre)|, if x is small, less possibility of flat region move

Amlogic Proprietary and Confidential
Copyright © Amlogic. All rights reserved.

Bit(s)	R/W	Default	Description
19:16	R/W	12	reg_nr4_mc_alp1_sgn_lut11 : // unsigned , default = 12 alp1 vs x=abs|sgn(cur-pre)|, if x is small, less possibility of flat region move
15:12	R/W	13	reg_nr4_mc_alp1_sgn_lut12 : // unsigned , default = 13 alp1 vs x=abs|sgn(cur-pre)|, if x is small, less possibility of flat region move
11: 8	R/W	14	reg_nr4_mc_alp1_sgn_lut13 : // unsigned , default = 14 alp1 vs x=abs|sgn(cur-pre)|, if x is small, less possibility of flat region move
7: 4	R/W	15	reg_nr4_mc_alp1_sgn_lut14 : // unsigned , default = 15 alp1 vs x=abs|sgn(cur-pre)|, if x is small, less possibility of flat region move
3: 0	R/W	15	reg_nr4_mc_alp1_sgn_lut15 : // unsigned , default = 15 alp1 vs x=abs|sgn(cur-pre)|, if x is small, less possibility of flat region move

Table 10-1365 NR4_RO_NM_SAD_SUM 0x371f

Bit(s)	R/W	Default	Description
31: 0	R.O	0	ro_nr4_nm_sad_sum : // unsigned , default = 0 sum of sad, for scene change de-tectcion, in noise meter

Table 10-1366 NR4_RO_NM_SAD_CNT 0x3720

Bit(s)	R/W	Default	Description
31: 0	R.O	0	ro_nr4_nm_sad_cnt : // unsigned , default = 0 cnt of sad, for scene change de-tectcion, in noise meter

Table 10-1367 NR4_RO_NM_VAR_SUM 0x3721

Bit(s)	R/W	Default	Description
31: 0	R.O	0	ro_nr4_nm_var_sum : // unsigned , default = 0 sum of var, for noise level detec-tion, in noise meter

Table 10-1368 NR4_RO_NM_VAR_SCNT 0x3722

Bit(s)	R/W	Default	Description
31: 0	R.O	0	ro_nr4_nm_var_cnt : // unsigned , default = 0 cnt of var, for noise level detection, in noise meter

Table 10-1369 NR4_RO_NM_VAR_MIN_MAX 0x3723

Bit(s)	R/W	Default	Description
21:12	R.O	1023	ro_nr4_nm_min_var : // unsigned , default = 1023 min of var, for noise level de-tection, in noise meter
9: 0	R.O	0	ro_nr4_nm_max_var : // unsigned , default = 0 max of var, for noise level detec-tion, in noise meter

Amlogic Proprietary and Confidential
Copyright © Amlogic. All rights reserved.

Table 10-1370 NR4_RO_NR4_DBGPIX_NUM 0x3724

Bit(s)	R/W	Default	Description
27: 0	R.O	0	ro_nr4_dbgpix_num : // unsigned , default = 0 number of pixels statistic invoved (removed?)

Table 10-1371 NR4_RO_NR4_BLDVS2_SUM 0x3725

Bit(s)	R/W	Default	Description
31: 0	R.O	0	ro_nr4_bld1vs2_sum : // unsigned , default = 0 sum of blend_1vs2 with the debug window

Table 10-1372 NR4_BLDVS3_SUM 0x3726

Bit(s)	R/W	Default	Description
31: 0	R.O	0	ro_nr4_bld12vs3_sum : // unsigned , default = 0 sum of blend_12vs3 with the debug window

Table 10-1373 NR4_COEF12_SUM 0x3727

Bit(s)	R/W	Default	Description
31: 0	R.O	0	ro_nr4_coef12_sum : // signed , default = 0 sum of coef_blt_blend12 with the debug window, under 8 bits precision

Table 10-1374 NR4_COEF123_SUM 0x3728

Bit(s)	R/W	Default	Description
31: 0	R.O	0	ro_nr4_coef123_sum : // signed , default = 0 sum of coef_final with the debug window, under 8 bits precision

Table 10-1375 XLR_CTRL 0x3730

Bit(s)	R/W	Default	Description
22	R/W	1	reg_xlr_en : // unsigned , default = 1 enable bits for xlr function, 1: enable, 0: disable default = 1
21	R/W	1	reg_xlr_side_en : // unsigned , default = 1 enable to filter the above and below lines with xlr filter, default = 1
20	R/W	1	reg_xlr_3lines : // unsigned , default = 1 3 lines version enable default= 0
19:16	R/W	12	reg_xlr_simlp_gain : // unsigned , default = 12 gain to simlp to decide if need the XLR, default= 12
13: 8	R/W	6	reg_xlr_ooplp_gain : // unsigned , default = 6 gain to out-of-phase lp error to decide if need the XLR, birn to 16 as 1, default= 3
7: 0	R/W	64	reg_xlr_dislp_thrd : // unsigned , default = 64 threshold to lp error to discard XLR. default= 80

Amlogic Proprietary and Confidential
Copyright © Amlogic. All rights reserved.

Table 10-1376 XLR_THRD 0x3731

Bit(s)	R/W	Default	Description
27:24	R/W	3	reg_xlr_txt_core : // unsigned , default = 3 coring to texture default = 3, (3/32)
23:16	R/W	5	reg_xlr_err_thrd2 : // unsigned , default = 5 threshold to error to decide blending coef, 0, 1/4, 1/2, 1.0, defaut= {20, 10, 5}
15: 8	R/W	10	reg_xlr_err_thrd1 : // unsigned , default = 10 threshold to error to decide blending coef, 0, 1/4, 1/2, 1.0, defaut= {20, 10, 5}
7: 0	R/W	20	reg_xlr_err_thrd0 : // unsigned , default = 20 threshold to error to decide blending coef, 0, 1/4, 1/2, 1.0, defaut= {20, 10, 5}

Table 10-1377 XLR_HCT_THRD 0x3732

Bit(s)	R/W	Default	Description
27:26	R/W	1	reg_xlr_hct_step : // unsigned , default = 1 horizontal chroma diff steps, 0: abs[-1 (2) -1]; 1: abs[-1 0 (2) 0 -1], 2: abs[-1 0 0 (2) 0 0 -1]; 3:abs[-1 0 0 0 (2) 0 0 0 -1]
25:24	R/W	1	reg_xlr_hct_lpf : // unsigned , default = 1 horizontal chroma diff low-pass filter enable, 0: no HLPF; 1: [1 2 1]; 2: max[-1:1]; 3: max[-2:2]
23:16	R/W	20	reg_xlr_hct_thr : // unsigned , default = 20 horizontal chroma diff threshold for xlr enable, to save the horizontal no color tran mode
15: 8	R/W	8	reg_xlr_sat_thr : // unsigned , default = 8 saturation threshold for xlr enable, the smaller of the threshold , the more will do xlr;
7: 2	R/W	3	reg_xlr_hmargin : // unsigned , default = 3 left/right number of pixels without xlr;
0	R/W	0	reg_xlr_hpf_only : // unsigned , default = 0 enable for only do xlr filter on high pass portion of the data, instead full data

Table 10-1378 NR_DB_FLT_CTRL 0x3738

Bit(s)	R/W	Default	Description
26	R/W	0	reg_nrdeband_reset1 : // unsigned , default = 0 0 : no reset seed 1: reload chroma seed
25	R/W	0	reg_nrdeband_reset0 : // unsigned , default = 0 0 : no reset seed 1: reload luma seed
24	R/W	0	reg_nrdeband_rgb : // unsigned , default = 0 0 : yuv 1: RGB
23	R/W	1	reg_nrdeband_en11 : // unsigned , default = 1 debanding registers of side lines, [0] for luma, same for below
22	R/W	1	reg_nrdeband_en10 : // unsigned , default = 1 debanding registers of side lines, [1] for chroma, same for below
21	R/W	1	reg_nrdeband_siderand : // unsigned , default = 1 options to use side two lines use the rand, instead of use for the YUV three component of middle line, 0: seed [3]/bandrand[3] for middle line yuv; 1: seed[3]/bandrand[3] for nearby three lines Y;
20	R/W	0	reg_nrdeband_randmode : // unsigned , default = 0 mode of rand noise adding, 0: same noise strength for all difs; else: strenght of noise will not exceed the difs, MIN((pPKReg->reg_nrdeband_bandrand[m]), noise[m])
19:17	R/W	6	reg_nrdeband_bandrand2 : // unsigned , default = 6
15:13	R/W	6	reg_nrdeband_bandrand1 : // unsigned , default = 6
11: 9	R/W	6	reg_nrdeband_bandrand0 : // unsigned , default = 6

Amlogic Proprietary and Confidential
Copyright © Amlogic. All rights reserved.

Bit(s)	R/W	Default	Description
7	R/W	1	reg_nrdeband_hpxor1 : // unsigned , default = 1 debanding random hp portion xor, [0] for luma
6	R/W	1	reg_nrdeband_hpxor0 : // unsigned , default = 1 debanding random hp portion xor, [1] for chroma
5	R/W	1	reg_nrdeband_en1 : // unsigned , default = 1 debanding registers, for luma
4	R/W	1	reg_nrdeband_en0 : // unsigned , default = 1 debanding registers, for chroma
3: 2	R/W	2	reg_nrdeband_lpf_mode1 : // unsigned , default = 2 lpf mode, 0: 3x3, 1:3x5; 2: 5x5; 3:5x7
1: 0	R/W	2	reg_nrdeband_lpf_mode0 : // unsigned , default = 2 lpf mode, 0: 3x3, 1:3x5; 2: 5x5; 3:5x7

Table 10-1379 NR_DB_FLT_YC_THRD 0x3739

Bit(s)	R/W	Default	Description
31:28	R/W	9	reg_nrdeband_luma_th3 : // unsigned , default = 9 threshold to |Y-Ylpf|, if < th [0] use lpf
27:24	R/W	7	reg_nrdeband_luma_th2 : // unsigned , default = 7 elseif <th[1] use (lpf*3 + y)/4
23:20	R/W	6	reg_nrdeband_luma_th1 : // unsigned , default = 6 elseif <th[1] use (lpf*3 + y)/4elseif <th[2] (lpf*1 + y)/2
19:16	R/W	5	reg_nrdeband_luma_th0 : // unsigned , default = 5 elseif <th[1] use (lpf*3 + y)/4elseif elseif <th[3] (lpf*1 + 3*y)/4; else
15:12	R/W	9	reg_nrdeband_chrm_th3 : // unsigned , default = 9 threshold to |Y-Ylpf|, if < th [0] use lpf
11: 8	R/W	7	reg_nrdeband_chrm_th2 : // unsigned , default = 7 elseif <th[1] use (lpf*3 + y)/4
7: 4	R/W	6	reg_nrdeband_chrm_th1 : // unsigned , default = 6 elseif <th[1] use (lpf*3 + y)/4elseif <th[2] (lpf*1 + y)/2
3: 0	R/W	5	reg_nrdeband_chrm_th0 : // unsigned , default = 5 elseif <th[1] use (lpf*3 + y)/4elseif elseif

Table 10-1380 NR_DB_FLT_RANDLUT 0x373a

Bit(s)	R/W	Default	Description
23:21	R/W	1	reg_nrdeband_randslut7 : // unsigned , default = 1 lut0
20:18	R/W	1	reg_nrdeband_randslut6 : // unsigned , default = 1 lut0
17:15	R/W	1	reg_nrdeband_randslut5 : // unsigned , default = 1 lut0
14:12	R/W	1	reg_nrdeband_randslut4 : // unsigned , default = 1 lut0
11: 9	R/W	1	reg_nrdeband_randslut3 : // unsigned , default = 1 lut0
8: 6	R/W	1	reg_nrdeband_randslut2 : // unsigned , default = 1 lut0
5: 3	R/W	1	reg_nrdeband_randslut1 : // unsigned , default = 1 lut0
2: 0	R/W	1	reg_nrdeband_randslut0 : // unsigned , default = 1 lut0

Amlogic Proprietary and Confidential
Copyright © Amlogic. All rights reserved.

Table 10-1381 NR_DB_FLT_PXI_THRD 0x373b

Bit(s)	R/W	Default	Description
25:16	R/W	0	reg_nrdeband_yc_th1 : // unsigned , default = 0 to luma/|u/v| for using the denoise
9: 0	R/W	0	reg_nrdeband_yc_th0 : // unsigned , default = 0 to luma/|u/v| for using the denoise

Table 10-1382 NR_DB_FLT_SEED_Y 0x373c

Bit(s)	R/W	Default	Description
31: 0	R/W	162143-8240	reg_nrdeband_seed0 : // unsigned , default = 1621438240 noise adding seed for Y. seed[0]= 0x60a52f20; as default

Table 10-1383 NR_DB_FLT_SEED_U 0x373d

Bit(s)	R/W	Default	Description
31: 0	R/W	162143-8247	reg_nrdeband_seed1 : // unsigned , default = 1621438247 noise adding seed for U. seed[0]= 0x60a52f27; as default

Table 10-1384 NR_DB_FLT_SEED_V 0x373e

Bit(s)	R/W	Default	Description
31: 0	R/W	162143-8242	reg_nrdeband_seed2 : // unsigned , default = 1621438242 noise adding seed for V. seed[0]= 0x60a52f22; as default

Table 10-1385 NR_DB_FLT_SEED3 0x373f

Bit(s)	R/W	Default	Description
31: 0	R/W	162143-8242	reg_nrdeband_seed3 : // unsigned , default = 1621438242 noise adding seed for V. seed[0]= 0x60a52f22; as default

Table 10-1386 NRWR_DBG_AXI_CMD_CNT 0x2090

Bit(s)	R/W	Default	Description
31:0	RO	0	wr_mif_dbg_axi_cmd_cnt unsigned, default = 0,

Table 10-1387 NRWR_DBG_AXI_DAT_CNT 0x2091

Bit(s)	R/W	Default	Description
31:0	RO	0	wr_mif_dbg_axi_dat_cnt unsigned, default = 0,

Amlogic Proprietary and Confidential
Copyright © Amlogic. All rights reserved.

Table 10-1388 DI_NRWR_CANVAS 0x2092

Bit(s)	R/W	Default	Description
31:16	/	0	reserved
15:8	R/W	0	wmif_canvas_index_chroma unsigned,default = 0,
7 :0	R/W	0	wmif_canvas_index_luma unsigned,default = 0,

Table 10-1389 DI_NRWR_URGENT 0x2093

Bit(s)	R/W	Default	Description
31:16	/	0	reserved
15 :0	R/W	0	wmif_urgent_ctrl unsigned,default = 0,

Table 10-1390 DI_NRWR_X 0x2094

Bit(s)	R/W	Default	Description
31	/		reserved
30	R/W		wmif_rev_x unsigned,default = 0, bit
29:16	R/W		wmif_end_x unsigned,default = 0,
13:0	R/W		wmif_start_x unsigned,default = 0,

Table 10-1391 DI_NRWR_Y 0x2095

Bit(s)	R/W	Default	Description
31	/		reserved
30	R/W		wmif_rev_x unsigned,default = 0, bit
29:16	R/W		wmif_end_x unsigned,default = 0,
13:0	R/W		wmif_start_x unsigned,default = 0,

Table 10-1392 DI_NRWR_CTRL 0x2097

Bit(s)	R/W	Default	Description
31	R/W	0	Pending_ddr_wrrsp_nrwr
30	R/W	0	Nrwr_reg_swap
29-26	R/W	0	Nrwr_burst_lim
25	R/W	0	Nrwr_canvas_syncen
24	R/W	0	Nrwr_no_clk_gate
23-22	R/W	0	Nrwr_rgb_mode , 0: 4:2:2 to one canvas; 1: 4:4:4 to one canvas; 2: Y to luma canvas, CbCr to chroma canvas, for NV12/21; 3: Reserved.
21-20	R/W	0	Nrwr_hconv_mode
19-18	R/W	0	Nrwr_vconv_mode
17	R/W	0	Nrwr_swap_cbcr

Amlogic Proprietary and Confidential
Copyright © Amlogic. All rights reserved.

Bit(s)	R/W	Default	Description
16	R/W	0	Nrwr_urgent
15-8	R/W	0	Nrwr_canvas_index_chroma
7-0	R/W	0	Nrwr_canvas_index_luma

Table 10-1393 DI_NRWR_SHRK_CTRL 0x2097

Bit(s)	R/W	Default	Description
31:10	R/W	0	reserved
9:8	R/W	0	reg_vshrk_mode unsigned, default = 0, 0:1/2 horizontal shrink 1:1/4 horizontal shrink 2:1/8 horizontal shrink bit
7:6	R/W	0	reg_hshrk_mode unsigned, default = 0, 0:1/2 vertical shrink 1:1/4 vertical shrink 2:1/8 vertical shrink
5:2	R/W	0	reg_gclk_ctrl unsigned, default = 0
1	R/W	0	reg_frm_rst unsigned, default = 0
0	R/W	0	reg_shrk_en unsigned, default = 0

Table 10-1394 DI_NRWR_SHRK_SIZE 0x2098

Bit(s)	R/W	Default	Description
31:26	R/W	0	reserved
25:13	R/W	0	reg_frm_hsize unsigned, default = 1920, hsize in
12:0	R/W	0	reg_frm_vsize unsigned, default = 1080, vsize in

Table 10-1395 DI_NRWR_CROP_CTRL 0x209a

Bit(s)	R/W	Default	Description
31	R/W	0	reg_crop_en : unsigned, RW,default = 0,dimm_layer enable signal
3:0	R/W	4	reg_hold_line : unsigned, RW,default = 4,dimm_layer data

Table 10-1396 DI_NRWR_CROP_DIMM_CTRL 0x209b

Bit(s)	R/W	Default	Description
31	R/W	0	reg_dimm_layer_en : unsigned, RW,default = 0,dimm_layer enable signal
29:0	R/W	0x0008-0200	reg_dimm_data : unsigned, RW,default = 29'h00080200,dimm_layer data

Table 10-1397 DI_NRWR_CROP_SIZE_IN 0x209c

Bit(s)	R/W	Default	Description
28:16	R/W	1920	reg_crop_hsize : unsigned, default = 1920 , pic horz size in unit: pixel
12:0	R/W	1080	reg_crop_vsize : unsigned, default = 1080 , pic vert size in unit: pixel

Amlogic Proprietary and Confidential
Copyright © Amlogic. All rights reserved.

Table 10-1398 DI_NRWR_CROP_HSCOPE 0x209d

Bit(s)	R/W	Default	Description
28:16	R/W	1919	reg_cropwin_end_h : unsigned, default = 1919 ;
12:0	R/W	0	reg_cropwin_bgn_h : unsigned, default = 0 ;

Table 10-1399 DI_NRWR_CROP_VSCOPE 0x209e

Bit(s)	R/W	Default	Description
28:16	R/W	1079	reg_cropwin_end_v : unsigned, default = 1079 ;
12:0	R/W	0	reg_cropwin_bgn_v : unsigned, default = 0 ;

Table 10-1400 DIWR_DBG_AXI_CMD_CNT 0x20f0

Bit(s)	R/W	Default	Description
31:0	RO	0	wr_mif_dbg_axi_cmd_cnt unsigned, default = 0,

Table 10-1401 DIWR_DBG_AXI_DAT_CNT 0x20f1

Bit(s)	R/W	Default	Description
31:0	RO	0	wr_mif_dbg_axi_dat_cnt unsigned, default = 0,

Table 10-1402 DI_DIWR_CANVAS 0x20f2

Bit(s)	R/W	Default	Description
31:16	/	0	reserved
15:8	R/W	0	wmif_canvas_index_chroma unsigned,default = 0,
7 :0	R/W	0	wmif_canvas_index_luma unsigned,default = 0,

Table 10-1403 DI_DIWR_URGENT 0x20f3

Bit(s)	R/W	Default	Description
31:16	/	0	reserved
15 :0	R/W	0	wmif_urgent_ctrl unsigned,default = 0,

Table 10-1404 DI_DIWR_X 0x20f4

Bit(s)	R/W	Default	Description
31	/		reserved
30	R/W		wmif_rev_x unsigned,default = 0, bit
29:16	R/W		wmif_end_x unsigned,default = 0,
13:0	R/W		wmif_start_x unsigned,default = 0,

Amlogic Proprietary and Confidential
Copyright © Amlogic. All rights reserved.

Table 10-1405 DI_DIWR_Y 0x20f5

Bit(s)	R/W	Default	Description
31	/		reserved
30	R/W		wmif_rev_x unsigned,default = 0, bit
29:16	R/W		wmif_end_x unsigned,default = 0,
13:0	R/W		wmif_start_x unsigned,default = 0,

Table 10-1406 DI_DIWR_CTRL 0x20f7

Bit(s)	R/W	Default	Description
31	R/W	0	Pending_ddr_wrrsp_nrwr
30	R/W	0	Nrwr_reg_swap
29-26	R/W	0	Nrwr_burst_lim
25	R/W	0	Nrwr_canvas_syncen
24	R/W	0	Nrwr_no_clk_gate
23-22	R/W	0	Nrwr_rgb_mode , 0: 4:2:2 to one canvas; 1: 4:4:4 to one canvas; 2: Y to luma canvas, CbCr to chroma canvas, for NV12/21; 3: Reserved.
21-20	R/W	0	Nrwr_hconv_mode
19-18	R/W	0	Nrwr_vconv_mode
17	R/W	0	Nrwr_swap_cbcr
16	R/W	0	Nrwr_urgent
15-8	R/W	0	Nrwr_canvas_index_chroma
7-0	R/W	0	Nrwr_canvas_index_luma

Table 10-1407 DI_DIWR_SHRK_CTRL 0x2097

Bit(s)	R/W	Default	Description
31:10	R/W	0	reserved
9:8	R/W	0	reg_vshrk_mode unsigned, default = 0, 0:1/2 horizontal shrink 1:1/4 horizontal shrink 2:1/8 horizontal shrink bit
7:6	R/W	0	reg_hshrk_mode unsigned, default = 0, 0:1/2 vertical shrink 1:1/4 vertical shrink 2:1/8 vertical shrink
5:2	R/W	0	reg_gclk_ctrl unsigned, default = 0
1	R/W	0	reg_frm_rst unsigned, default = 0
0	R/W	0	reg_shrk_en unsigned, default = 0

Amlogic Proprietary and Confidential
Copyright © Amlogic. All rights reserved.

Table 10-1408 DI_DIWR_SHRK_SIZE 0x20f8

Bit(s)	R/W	Default	Description
31:26	R/W	0	reserved
25:13	R/W	0	reg_frm_hsize unsigned, default = 1920, hsize in
12:0	R/W	0	reg_frm_vsize unsigned, default = 1080, vsize in

Table 10-1409 DI_DIWR_CROP_CTRL 0x20fa

Bit(s)	R/W	Default	Description
31	R/W	0	reg_crop_en : unsigned, RW,default = 0,dimm_layer enable signal
3:0	R/W	4	reg_hold_line : unsigned, RW,default = 4,dimm_layer data

Table 10-1410 DI_DIWR_CROP_DIMM_CTRL 0x20fb

Bit(s)	R/W	Default	Description
31	R/W	0	reg_dimm_layer_en : unsigned, RW,default = 0,dimm_layer enable signal
29:0	R/W	0x0008-0200	reg_dimm_data : unsigned, RW,default = 29'h00080200,dimm_layer data

Table 10-1411 DI_DIWR_CROP_SIZE_IN 0x20fc

Bit(s)	R/W	Default	Description
28:16	R/W	1920	reg_crop_hsize : unsigned, default = 1920 , pic horz size in unit: pixel
12:0	R/W	1080	reg_crop_vsize : unsigned, default = 1080 , pic vert size in unit: pixel

Table 10-1412 DI_DIWR_CROP_HSCOPE 0x20fd

Bit(s)	R/W	Default	Description
28:16	R/W	1919	reg_cropwin_end_h : unsigned, default = 1919 ;
12:0	R/W	0	reg_cropwin_bgn_h : unsigned, default = 0 ;

Table 10-1413 DI_DIWR_CROP_VSCOPE 0x20fe

Bit(s)	R/W	Default	Description
28:16	R/W	1079	reg_cropwin_end_v : unsigned, default = 1079 ;
12:0	R/W	0	reg_cropwin_bgn_v : unsigned, default = 0 ;

Amlogic Proprietary and Confidential
Copyright © Amlogic. All rights reserved.

10.2.3.16 VIUB Top-Level Registers

Table 10-1414 VIU_SW_RESET 1a01

Bit(s)	R/W	Default	Description
31	R/W	0	dolby1b_sw_reset : // unsigned , RW , default = 0 Reset module by write pulse (0->1->0)
30	R/W	0	dolby1a_sw_reset : // unsigned , RW , default = 0 Reset module by write pulse (0->1->0)
30	R/W	0	mali_afbcd2_sw_reset : // unsigned , RW , default = 0 Reset module by write pulse (0->1->0)
28	R/W	0	mali_afbcd2_sw_reset : // unsigned , RW , default = 0 Reset module by write pulse (0->1->0),Only active when MALI_AFBCD2_TOP_CTRL[23] high
27	R/W	0	mali_afbcd1_sw_reset : // unsigned , RW , default = 0 Reset module by write pulse (0->1->0)
26	R/W	0	mali_afbcd1_sw_reset : // unsigned , RW , default = 0 Reset module by write pulse (0->1->0) ,Only active when MALI_AFBCD1_TOP_CTRL[23] high
25	R/W	0	vd_mif_afbcd2_sw_reset : // unsigned , RW , default = 0 Reset module by write pulse (0->1->0)
24	R/W	0	vd_mif_afbcd1_sw_reset : // unsigned , RW , default = 0 Reset module by write pulse (0->1->0)
23	R/W	0	vd_mif_afbcd0_sw_reset : // unsigned , RW , default = 0 Reset module by write pulse (0->1->0)
22	R/W	0	mali_afbcd0_sw_reset : // unsigned , RW , default = 0 Reset module by write pulse (0->1->0)
21	R/W	0	mali_afbcd0_sw_reset : // unsigned , RW , default = 0 Reset module by write pulse (0->1->0) ,Only active when MALI_AFBCD_TOP_CTRL[23] high
20	R/W	0	afbc_arb_sw_reset : // unsigned , RW , default = 0 Reset module by write pulse (0->1->0)
19	R/W	0	afbc_arb_sw_reset : // unsigned , RW , default = 0 Reset module by write pulse (0->1->0)
17	R/W	0	ods4_sw_reset : // unsigned , RW , default = 0 Reset module by write pulse (0->1->0)
16	R/W	0	ods3_sw_reset : // unsigned , RW , default = 0 Reset module by write pulse (0->1->0)
15	R/W	0	ods2_sw_reset : // unsigned , RW , default = 0 Reset module by write pulse (0->1->0)
14	R/W	0	ods1_sw_reset : // unsigned , RW , default = 0 Reset module by write pulse (0->1->0)
13	R/W	0	vpp_axi_sw_reset : // unsigned , RW , default = 0 Reset module by write pulse (0->1->0)
12	R/W	0	lc_stts_sw_reset : // unsigned , RW , default = 0 Reset module by write pulse (0->1->0)
9	R/W	0	vks_sw_reset : // unsigned , RW , default = 0 Reset module by write pulse (0->1->0)
8	R/W	0	vpp2_sw_reset : // unsigned , RW , default = 0 Reset module by write pulse (0->1->0)

Amlogic Proprietary and Confidential
Copyright © Amlogic. All rights reserved.

Bit(s)	R/W	Default	Description
7	R/W	0	vpp1_sw_reset : // unsigned , RW , default = 0 Reset module by write pulse (0->1->0)
6	R/W	0	prime_sw_reset : // unsigned , RW , default = 0 Reset module by write pulse (0->1->0)
5	R/W	0	hist_spl_sw_reset : // unsigned , RW , default = 0 Reset module by write pulse (0->1->0)
4	R/W	0	ldim_sw_reset : // unsigned , RW , default = 0 Reset module by write pulse (0->1->0)
3	R/W	0	dolby2b_sw_reset : // unsigned , RW , default = 0 Reset module by write pulse (0->1->0)
2	R/W	0	dolby2a_sw_reset : // unsigned , RW , default = 0 Reset module by write pulse (0->1->0)
1	R/W	0	dolby_tv_sw_reset : // unsigned , RW , default = 0 Reset module by write pulse (0->1->0)
0	R/W	0	vpp_sw_reset : // unsigned , RW , default = 0 Reset module by write pulse (0->1->0)

Table 10-1415 VIU_SW_RESET0 1a02

Bit(s)	R/W	Default	Description
2	R/W	0	dolby1c_sw_reset : // unsigned , RW , default = 0 Reset module by write pulse (0->1->0)
1	R/W	0	dolby2d_sw_reset : // unsigned , RW , default = 0 Reset module by write pulse (0->1->0)
0	R/W	0	dolby2c_sw_reset : // unsigned , RW , default = 0 Reset module by write pulse (0->1->0)

Table 10-1416 VIU_MISC_CTRL0 1a06

Bit(s)	R/W	Default	Description
10	R/W	0	vsync2_int_ctrl : // unsigned , RW ,default = 0 vsync_int_pre = go_field_ff & ((~viu_misc_ctrl0[10]) | viu_misc_ctrl0[10] & (~field_ff)) ;
9	R/W	0	vsync1_int_ctrl : // unsigned , RW ,default = 0 vsync_int_pre = go_field_ff & ((~viu_misc_ctrl0[9]) | viu_misc_ctrl0[9] & (~field_ff)) ;
8	R/W	0	vsync0_int_ctrl : // unsigned , RW ,default = 0 vsync_int_pre = go_field_ff & ((~viu_misc_ctrl0[8]) | viu_misc_ctrl0[8] & (~field_ff)) ;
0	R/W	0	scan_reg : // unsigned , RW ,default = 0 just some register bit,used for scan coverage

Table 10-1417 VD1_AFBCD0_MISC_CTRL 1a0a

Bit(s)	R/W	Default	Description
11	R/W	0	afbc0_osd3_mux_vd1 : // unsigned , RW ,default = 0 0:afbcd to vd1 1:osd3 to vd1
8	R/W	0	di_mif0_en : // unsigned , RW ,default = 0 0:mif_out to vpp 1:mif_out to di

Amlogic Proprietary and Confidential
Copyright © Amlogic. All rights reserved.

Table 10-1418 VD2_AFBCD1_MISC_CTRL 1a0b

Bit(s)	R/W	Default	Description
15:14	R/W	0	vd2_in_mux_sel : // unsigned , RW ,default = 0 0:vd2 to vpp_wrap_vd2 1:vd2 to vpp_wrap_osd3 2: vd2 to vpp_wrap_osd4
11	R/W	0	afbc1_osd4_mux_vd2 : // unsigned , RW ,default = 0 0:afbcd to vd2 1:osd4 to vd2
8:0	R/W	0	vd2_osd_mux_alpha : // unsigned , RW ,default = 0 alpha register for vd2_in_ mux_sel == 1/2

Table 10-1419 WR_BACK_MISC_CTRL 1a0d

Bit(s)	R/W	Default	Description
3	R/W	0	wrbak_chan3_hsyn_en : // unsigned , RW ,default = 0 vpp0 wrbak0 hsync enable
2	R/W	0	wrbak_chan2_hsyn_en : // unsigned , RW ,default = 0 vpp0 wrbak1 hsync enable
1	R/W	0	wrbak_chan1_hsyn_en : // unsigned , RW ,default = 0 vpp1 wrbak0 hsync enable
0	R/W	0	wrbak_chan0_hsyn_en : // unsigned , RW ,default = 0 vpp2 wrbak0 hsync enable

Table 10-1420 OSD_PATH_MISC_CTRL 1a0e

Bit(s)	R/W	Default	Description
31:16	R/W	0	vpp_osd_4mux4_sel : // unsigned , RW ,default = 0 vpp_{osd4,osd3,osd2,osd1} _din_mux 1:osd1 2:osd2 3:osd3 4:osd4 else:close

Table 10-1421 MALI_AFBCD_TOP_CTRL 1a0f

Bit(s)	R/W	Default	Description
23	R/W	0	mali_afbcd1_sw_rst_sel : // unsigned ,RW , default = 0 1:mali_afbcd0_sw_reset [0] 2:go_field
22	R/W	0	reg_osd2_secure : // unsigned ,RW , default = 0 osd_axi secure bit
21	R/W	0	reg_osd2_axi_sel : // unsigned ,RW , default = 0 1:osd read mali_afbcd_data 0: osd read mif data
10	R/W	0	osd2_din_ext_mode : // unsigned ,RW , default = 0 1:add two bits 0 at high bits 0: add two bits 0 at low bits
19	R/W	0	osd2_dolby_bypass_en : // unsigned ,RW , default = 0 1:data bypass_osd2_dol- by 0:data into_osd2_dolby
18	R/W	0	reg_mali_afbcd_sec : // unsigned ,RW , default = 0 mali_afbcd_axi secure bit
17	R/W	0	reg_osd1_secure : // unsigned ,RW , default = 0 osd_axi secure bit
16	R/W	0	reg_osd1_axi_sel : // unsigned ,RW , default = 0 1:osd read mali_afbcd_data 0: osd read mif data
15	R/W	0	osd1_din_ext_mode : // unsigned ,RW , default = 0 1:add two bits 0 at high bits 0: add two bits 0 at low bits
14	R/W	0	osd1_dolby_bypass_en : // unsigned ,RW , default = 0 1:data bypass_osd1_dol- by 0:data into_osd1_dolby
13:12	R/W	0	mali_afbcd_gclk_ctrl : // unsigned ,RW , default = 0 mali_afbcd_gclk_ctrl
8	R/W	1	mali_afbcd_data_128b : // unsigned ,RW , default = 1 mali_afbcd_data_128b

Amlogic Proprietary and Confidential
Copyright © Amlogic. All rights reserved.

Bit(s)	R/W	Default	Description
6 :4	R/W	7	mali_afbcd_max_len : // unsigned ,RW , default = 7 mali_afbcd_max_len
2 :0	R/W	5	mali_afbcd_axi_outstanding_trans : // unsigned ,RW , default = 5 mali_afbcd_ axi_outstanding_trans

Table 10-1422 MALI_AFBCD1_TOP_CTRL 1a55

Bit(s)	R/W	Default	Description
23	R/W	0	mali_afbcd1_sw_rst_sel : // unsigned ,RW , default = 0 1:mali_afbcd1_sw_reset [0] 2:go_field
22	R/W	0	reg_osd3_secure : // unsigned ,RW , default = 0 osd_axi secure bit
21	R/W	0	reg_osd3_axi_sel : // unsigned ,RW , default = 0 1:osd read mali_afbcd_data 0: osd read mif data
10	R/W	0	osd3_din_ext_mode : // unsigned ,RW , default = 0 1:add two bits 0 at high bits 0: add two bits 0 at low bits
19	R/W	0	osd3_dolby_bypass_en : // unsigned ,RW , default = 0 1:data bypass_osd3_dol- by 0:data into_osd3_dolby
13:12	R/W	0	mali_afbcd1_gclk_ctrl : // unsigned ,RW , default = 0 mali_afbcd1_gclk_ctrl
8	R/W	1	mali_afbcd1_data_128b : // unsigned ,RW , default = 1 mali_afbcd1_data_128b
6 :4	R/W	7	mali_afbcd1_max_len : // unsigned ,RW , default = 7 mali_afbcd1_max_len
2 :0	R/W	5	mali_afbcd1_axi_outstanding_trans : // unsigned ,RW , default = 5 mali_afbcd1_ axi_outstanding_trans

Table 10-1423 MALI_AFBCD2_TOP_CTRL 1a56

Bit(s)	R/W	Default	Description
23	R/W	0	mali_afbcd2_sw_rst_sel : // unsigned ,RW , default = 0 1:mali_afbcd2_sw_reset [0] 2:go_field
22	R/W	0	reg_osd4_secure : // unsigned ,RW , default = 0 osd_axi secure bit
21	R/W	0	reg_osd4_axi_sel : // unsigned ,RW , default = 0 1:osd read mali_afbcd_data 0: osd read mif data
10	R/W	0	osd4_din_ext_mode : // unsigned ,RW , default = 0 1:add two bits 0 at high bits 0: add two bits 0 at low bits
19	R/W	0	osd4_dolby_bypass_en : // unsigned ,RW , default = 0 1:data bypass_osd4_dol- by 0:data into_osd4_dolby
13:12	R/W	0	mali_afbcd2_gclk_ctrl : // unsigned ,RW , default = 0 mali_afbcd2_gclk_ctrl
8	R/W	1	mali_afbcd2_data_128b : // unsigned ,RW , default = 1 mali_afbcd2_data_128b
6 :4	R/W	7	mali_afbcd2_max_len : // unsigned ,RW , default = 7 mali_afbcd2_max_len
2 :0	R/W	5	mali_afbcd2_axi_outstanding_trans : // unsigned ,RW , default = 5 mali_afbcd2_ axi_outstanding_trans

Amlogic Proprietary and Confidential
Copyright © Amlogic. All rights reserved.

Table 10-1424 PATH_START_SEL 1a8a

Bit(s)	R/W	Default	Description
29:28	R/W	2	osd3_path_start_sel : //unsigned,RW ,default = 2 ,0:use vpp0_go_field 1:use vpp1_go_field 2:use vpp2_go_field
25:24	R/W	1	osd2_path_start_sel : //unsigned,RW ,default = 1 ,0:use vpp0_go_field 1:use vpp1_go_field 2:use vpp2_go_field
9 :8	R/W	2	vd3_path_start_sel : //unsigned,RW ,default = 2 ,0:use vpp0_go_field 1:use vpp1_go_field 2:use vpp2_go_field
5 :4	R/W	1	vd2_path_start_sel : //unsigned,RW ,default = 1 ,0:use vpp0_go_field 1:use vpp1_go_field 2:use vpp2_go_field

Table 10-1425 VIU_SECURE_DUMMY 1a08

Bit(s)	R/W	Default	Description
29:0	R/W	1	sec_dummy_data : //unsigned,RW ,default = 1 sec_dummy_data

Table 10-1426 VIU_FRM_CTRL 1a51

Bit(s)	R/W	Default	Description
29	R/W	0	viu0_frm_start : //unsigned,RW ,default = 0 pulse start vpp0 by write 1
26	R/W	0	viu0_chk_dout_sec : //unsigned,RW ,default = 0
19:17	R/W	0	viu0_frm_phs_mode : //unsigned,RW ,default = 0 1:auto start vpp0 by max{viu0_hold_line_num,module_hold_line_num}
16	R/W	0	viu0_frm_start_sel : //unsigned,RW ,default = 0 1:auto start vpp0 by hold_line_numhold_line_num 0:pulse start vpp0
12:0	R/W	4	viu0_hold_line_num : //unsigned,RW ,default = 4

Table 10-1427 VIU1_FRM_CTRL 1a8d

Bit(s)	R/W	Default	Description
29	R/W	0	viu1_frm_start : //unsigned,RW ,default = 0 //pulse start vpp1 by write 1
26	R/W	0	viu1_chk_dout_sec : //unsigned,RW ,default = 0
19:17	R/W	0	viu1_frm_phs_mode : //unsigned,RW ,default = 0 1:auto start vpp1 by max{viu1_hold_line_num,module_hold_line_num}
16	R/W	0	viu1_frm_start_sel : //unsigned,RW ,default = 0 1:auto start vpp1 by hold_line_numhold_line_num 0:pulse start vpp1
12:0	R/W	4	viu1_hold_line_num : //unsigned,RW ,default = 4

Table 10-1428 VIU2_FRM_CTRL 1a8e

Bit(s)	R/W	Default	Description
29	R/W	0	viu2_frm_start : //unsigned,RW ,default = 0 //pulse start vpp1 by write 1
26	R/W	0	viu2_chk_dout_sec : //unsigned,RW ,default = 0

Amlogic Proprietary and Confidential
Copyright © Amlogic. All rights reserved.

Bit(s)	R/W	Default	Description
19:17	R/W	0	viu2_frm_phs_mode : //unsigned,RW ,default = 0 1:auto start vpp1 by max{viu2_ hold_line_num,module_hold_line_num}
16	R/W	0	viu2_frm_start_sel : //unsigned,RW ,default = 0 1:auto start vpp1 by hold_line_ numhold_line_num 0:pulse start vpp2
12:0	R/W	4	viu2_hold_line_num : //unsigned,RW ,default = 4

Table 10-1429 VIU_MISC_CTRL1 1a07

Bit(s)	R/W	Default	Description
6	R/W	0	reg_viu2_cfg_err_clr : //unsigned,RW ,default = 0 //
5	R/W	0	reg_viu1_cfg_err_clr : //unsigned,RW ,default = 0 //
4	R/W	0	reg_viu0_cfg_err_clr : //unsigned,RW ,default = 0 //
2	R/W	0	reg_viu2_cfg_done : //unsigned,RW ,default = 0 //
1	R/W	0	reg_viu1_cfg_done : //unsigned,RW ,default = 0 //
0	R/W	0	reg_viu0_cfg_done : //unsigned,RW ,default = 0 //

Table 10-1430 VIU_SECURE_REG 1a04

Bit(s)	R/W	Default	Description
31	R/W	0x0	osd1_dolby_secure :
30	R/W	0	core1c_secure : //unsigned,RW ,default = 0
29	R/W	0	core1b_secure : //unsigned,RW ,default = 0
28	R/W	0	dolbytv_secure : //unsigned,RW ,default = 0
27	R/W	0	core1a_secure : //unsigned,RW ,default = 0
26	R/W	0	primesl_secure : //unsigned,RW ,default = 0
25	R.O	0	probe_secure : //unsigned,RW ,default = 0
24	R/W	0	vks_secure : //unsigned,RW ,default = 0
22	R/W	0	mali_afbcd2_cbus_secure : //unsigned,RW ,default = 0
21	R/W	0	mali_afbcd1_cbus_secure : //unsigned,RW ,default = 0
20	R/W	0	mali_afbcd_cbus_secure : //unsigned,RW ,default = 0
19	R/W	0	reg_osd4_cbus_secure : //unsigned,RW ,default = 0
18	R/W	0	reg_osd3_cbus_secure : //unsigned,RW ,default = 0
17	R/W	0	reg_osd2_cbus_secure : //unsigned,RW ,default = 0
16	R/W	0	reg_osd1_cbus_secure : //unsigned,RW ,default = 0
15	R/W	0	osd4_dolby_secure : //unsigned,RW ,default = 0
14	R/W	0	osd3_dolby_secure : //unsigned,RW ,default = 0
13	R/W	0	osd2_dolby_secure : //unsigned,RW ,default = 0
11	R/W	0	wrbak3_secure : //unsigned,RW ,default = 0

Amlogic Proprietary and Confidential
Copyright © Amlogic. All rights reserved.

Bit(s)	R/W	Default	Description
10	R/W	0	wrbak2_secure : //unsigned,RW ,default = 0
9	R/W	0	wrbak1_secure : //unsigned,RW ,default = 0
8	R/W	0	wrbak0_secure : //unsigned,RW ,default = 0
6	R/W	0	afbcd2_dout_secure : //unsigned,RW ,default = 0
5	R/W	0	afbcd1_dout_secure : //unsigned,RW ,default = 0
4	R/W	0	afbcd0_dout_secure : //unsigned,RW ,default = 0
3	R/W	0	osd4_dout_secure : //unsigned,RW ,default = 0
2	R/W	0	osd3_dout_secure : //unsigned,RW ,default = 0
1	R/W	0	osd2_dout_secure : //unsigned,RW ,default = 0
0	R/W	0	osd1_dout_secure : //unsigned,RW ,default = 0

Table 10-1431 VIU_SECURE_ST_RO 1a09

Bit(s)	R/W	Default	Description
1	R/W	0	viu_secure_reg_keep : //unsigned,RW ,default = 0
0	R/W	0	viu_secure_bak_reg_keep : //unsigned,RW ,default = 0

Table 10-1432 DOLBY_INT_STAT 1a05

Bit(s)	R/W	Default	Description
5	R/W	0	dolby_g2_int_flag : //unsigned,RO ,default = 0Interrupt Process_Fiq flag
4	R/W	0	dolby_g0_int_flag : //unsigned,RO ,default = 0,Interrupt Process_Fiq flag
3	R/W	0	dolby_c3_int_flag : //unsigned,RO ,default = 0,Interrupt Process_Fiq flag
2	R/W	0	dolby_s2_int_flag : //unsigned,RO ,default = 0,Interrupt Process_Fiq flag
1	R/W	0	dolby_s1_int_flag : //unsigned,RO ,default = 0,Interrupt Process_Fiq flag
0	R/W	0	dolby_c0_int_flag : //unsigned,RO ,default = 0,Interrupt Process_Fiq flag

Table 10-1433 VIU_SECURE_REG1 0x1a08

Bit(s)	R/W	Default	Description
31:0	R/W	0	viu_secure_reg1 : // unsigned , default = 0

Table 10-1434 VIU_SECURE_REG2 0x1a09

Bit(s)	R/W	Default	Description
31:0	R/W	0	viu_secure_reg2 : // unsigned , default = 0

Amlogic Proprietary and Confidential
Copyright © Amlogic. All rights reserved.

Table 10-1435 VIU_GCLK_CTRL 0x1a4f

Bit(s)	R/W	Default	Description
7:0	R/W	0	viu_gclk_ctrl : // unsigned , default =0

10.2.3.17 VPP_ARB_CTRL Registers

Table 10-1436 VPP_AFBC_RDARB_MODE 0x3970

Bit(s)	R/W	Default	Description
31-24	R/W	0	unused
23-20	R/W	0	Rdarb_sel
16	R/W	0	Rdarb_arb_mode
1-0	R/W	0	Rdarb_gate_clk_ctrl

Table 10-1437 VPP_AFBC_RDARB_REQEN_SLV 0x3971

Bit(s)	R/W	Default	Description
3-0	R/W	0	Rdarb_dc_req_en 1: request is valid, 0: invalid Bit0 : osd1 Bit1 : osd2 Bit2 : osd3 Bit3 : osd4

Table 10-1438 VPP_AFBC_RDARB_WEIGHT0_SLV 0x3972

Bit(s)	R/W	Default	Description
23-0	R/W	0	Rddc_weigh_sxn

Table 10-1439 VPP_AFBC_ARB_DBG_CTRL 0x3974

Bit(s)	R/W	Default	Description
31-0	RO	0	Det_cmd_ctrl

Table 10-1440 VPP_RDARB_MODE 0x3978

Bit(s)	R/W	Default	Description
27-20	R/W	0	Rdarb_sel 1: request is valid, 0: invalid Bit20: osd1 Bit21: osd2 Bit22: vd1 Bit23: vd2 Bit24: osd3 Bit25: osd4 Bit26: dolby0 Bit27:mali_afbc
17:16	R/W	0	Rdarb_arb_mode
3-0	R/W	0	Rdarb_gate_clk_ctrl

Amlogic Proprietary and Confidential
Copyright © Amlogic. All rights reserved.

Table 10-1441 VPP_RDARB_REQEN_SLV 0x3979

Bit(s)	R/W	Default	Description
15-0	R/W	0	Rdarb_dc_req_en 1: request is valid, 0: invalid Bit0: osd1 come from axi_port0 Bit1: osd2 come from axi_port0 Bit2: vd1 come from axi_port0 Bit3: vd2 come from axi_port0 Bit4: osd3 come from axi_port0 Bit5: osd4 come from axi_port0 Bit6: dolby0 come from axi_port0 Bit7:mali_afbc come from axi_port0 Bit8: osd1 come from axi_port1 Bit9: osd2 come from axi_port1 Bit10: vd1 come from axi_port1 Bit11: vd2 come from axi_port1 Bit12: osd3 come from axi_port1 Bit13: osd4 come from axi_port1 Bit14: dolby0 come from axi_port1 Bit15:mali_afbc come from axi_port1

Table 10-1442 VPP_RDARB_WEIGHT0_SLV 0x397a

Bit(s)	R/W	Default	Description
29-0	R/W	0	Rddc_weigh_sxn

Table 10-1443 VPP_RDARB_WEIGHT1_SLV 0x397b

Bit(s)	R/W	Default	Description
17-0	RO	0	Rddc_weigh_sxn

Table 10-1444 VPP_ARB_DBG_CTRL 0x397c

Bit(s)	R/W	Default	Description
31-0	RO	0	Det_cmd_ctrl

10.2.3.18 Osd_blend Registers

Table 10-1445 VIU_OSD_BLEND_CTRL 0x39b0

Bit(s)	R/W	Default	Description
31:29	R/W	0x0	hold_lines : //unsigned , default = 3'h0, hold_lines(line) after go_field ,module active
28:27	R/W	0x3	blend2_premult_en : //unsigned , default = 2'h3, blend2 input premult label 1:premult input 0:unpremult input
26	R/W	0x1	din0_byp_blend : //unsigned , default = 1'h1, blend_din0 bypass to dout0 1:bypass 0:blend_din0 input to blend0
25	R/W	0x1	din2_osd_sel : //unsigned , default = 1'h1, blend1_dout bypass to blend2 0: blend1_dout to blend2 1:blend1_dout to dout1

Amlogic Proprietary and Confidential
Copyright © Amlogic. All rights reserved.

Bit(s)	R/W	Default	Description
24	R/W	0x1	din3_osd_sel : //unsigned , default = 1'h1, blend1_din3 bypass to dout1 1:bypass 0:blend_din3 input to blend1
23:20	R/W	0x5	blend_din_en : //unsigned , default = 4'h5, blend enable bits ,four bits for four input
19:16	R/W	0x0	din_premult_en : //unsigned , default = 4'h0, input premult label bits,four bits for four input
15:0	R/W	0x2341	din_reoder_sel : //unsigned , default = 16'h2341,osd_blend input reorder exp : din_reoder_sel[3:0] = 1 ,blend_din0 select osd1 din_reoder_sel [3:0] = 2 ,blend_ din0 select osd2 din_reoder_sel [3:0] = 3 ,blend_din0 select osd3 din_reoder_sel [3:0] = else,blend_din0 no src din_reoder_sel [7:4] fot blend_din1

Table 10-1446 VIU_OSD_BLEND_CTRL1 0x39c0

Bit(s)	R/W	Default	Description
17:16	R/W	0	reg_alp1_mapping_mode : //unsigned , default = 0 , osd_blend dout1 alpha divid-or mode 8bit alpha:set 0 9bit alpha:set 3
14:13	R/W	0	reg_div1_gclk_en : //unsigned , default = 0 , osd_blend dout1 alpha dividor gclk_ en
12	R/W	0	reg_div1_alpha_en : //unsigned , default = 0 , osd_blend dout1 alpha dividor gclk_en enable
9:8	R/W	0	osdbld_gclk_ctrl : //unsigned , default = 0 , osdbld_gclk_ctrl
5:4	R/W	0	reg_alp_mapping_mode : //unsigned , default = 0 , osd_blend dout0 alpha dividor mode 8bit alpha:set 0 9bit alpha:set 3
2:1	R/W	0	reg_div_gclk_en : //unsigned , default = 0 , osd_blend dout0 alpha dividor gclk_ en
0	R/W	0	reg_div_alpha_en : //unsigned , default = 0 , osd_blend dout0 alpha dividor gclk_ en enable

Table 10-1447 VIU_OSD_BLEND_DIN0_SCOPE_H 0x39b1

Bit(s)	R/W	Default	Description
28:16	R/W	0x2d0	bld_din0_h_end : ///unsigned , default = 13'h2d0,blend_din0 h_end
12:0	R/W	0x0	bld_din0_h_start : ///unsigned , default = 13'h0 ,blend_din0 h_start

Table 10-1448 VIU_OSD_BLEND_DIN0_SCOPE_V 0x39b2

Bit(s)	R/W	Default	Description
28:16	R/W	0x1e0	bld_din0_v_end : ///unsigned , default = 13'h1e0,blend_din0 v_end
12:0	R/W	0x0	bld_din0_v_start : ///unsigned , default = 13'h0,blend_din0 v_start

Table 10-1449 VIU_OSD_BLEND_DIN1_SCOPE_H 0x39b3

Bit(s)	R/W	Default	Description
28:16	R/W	0x2d0	bld_din1_h_end : ///unsigned , default = 13'h2d0
12:0	R/W	0x0	bld_din1_h_start : ///unsigned , default = 13'h0

Amlogic Proprietary and Confidential
Copyright © Amlogic. All rights reserved.

Table 10-1450 VIU_OSD_BLEND_DIN1_SCOPE_V 0x39b4

Bit(s)	R/W	Default	Description
28:16	R/W	0x1e0	bld_din1_v_end : ///unsigned , default = 13'h1e0
12:0	R/W	0x0	bld_din1_v_start : ///unsigned , default = 13'h0

Table 10-1451 VIU_OSD_BLEND_DIN2_SCOPE_H 0x39b5

Bit(s)	R/W	Default	Description
28:16	R/W	0x2d0	bld_din2_h_end : ///unsigned , default = 13'h2d0
12:0	R/W	0x0	bld_din2_h_start : ///unsigned , default = 13'h0

Table 10-1452 VIU_OSD_BLEND_DIN2_SCOPE_V 0x39b6

Bit(s)	R/W	Default	Description
28:16	R/W	0x1e0	bld_din2_v_end : ///unsigned , default = 13'h1e0
12:0	R/W	0x0	bld_din2_v_start : ///unsigned , default = 13'h0

Table 10-1453 VIU_OSD_BLEND_DIN3_SCOPE_H 0x39b7

Bit(s)	R/W	Default	Description
28:16	R/W	0x2d0	bld_din3_h_end : ///unsigned , default = 13'h2d0
12:0	R/W	0x0	bld_din3_h_start : ///unsigned , default = 13'h0

Table 10-1454 VIU_OSD_BLEND_DIN3_SCOPE_V 0x39b8

Bit(s)	R/W	Default	Description
28:16	R/W	0x1e0	bld_din3_v_end : ///unsigned , default = 13'h1e0
12:0	R/W	0x0	bld_din3_v_start : ///unsigned , default = 13'h0

Table 10-1455 VIU_OSD_BLEND_DUMMY_DATA0 0x39b9

Bit(s)	R/W	Default	Description
23:16	R/W	0x00	blend0_dummy_data_y : //unsigned , default = 8'h00
15:8	R/W	0x80	blend0_dummy_data_cb : //unsigned , default = 8'h80
7:0	R/W	0x80	blend0_dummy_data_cr : //unsigned , default = 8'h80

Amlogic Proprietary and Confidential
Copyright © Amlogic. All rights reserved.

Table 10-1456 VIU_OSD_BLEND_DUMMY_ALPHA 0x39ba

Bit(s)	R/W	Default	Description
28:20	R/W	0x0	blend0_dummy_alpha : //unsigned , default = 9'h0
19:11	R/W	0x0	blend1_dummy_alpha : //unsigned , default = 9'h0
8:0	R/W	0x0	blend2_dummy_alpha : //unsigned , default = 9'h0

Table 10-1457 VIU_OSD_BLEND_BLEND0_SIZE 0x39bb

Bit(s)	R/W	Default	Description
28:16	R/W	0x1e0	blend0_vsize : //unsigned , default = 13'h1e0,blend0_vsize
12:0	R/W	0x2d0	blend0_hsize : //unsigned , default = 13'h2d0,blend0_hsize

Table 10-1458 VIU_OSD_BLEND_BLEND1_SIZE 0x39bc

Bit(s)	R/W	Default	Description
28:16	R/W	0x1e0	blend1_vsize : //unsigned , default = 13'h1e0
12:0	R/W	0x2d0	blend1_hsize : ///unsigned , default = 13'h2d0

10.2.3.19 Pre/Post Blend Registers

Table 10-1459 VPP_PRE_BLEND_CTRL 0x3960

Bit(s)	R/W	Default	Description
27:20	R/W	0x4	hold_lines : //unsigned , default = 8'h4,blend work after hold_lines line after go_field
1:0	R/W	0x1	gclk_ctrl : //unsigned , default = 16'h1,gating ctrl

Table 10-1460 VPP_PRE_BLEND_BLEND_DUMMY_DATA 0x3961

Bit(s)	R/W	Default	Description
23:16	R/W	0x0	blend0_dummy_data_y : //unsigned , default = 8'h0,blend dummy data
15:8	R/W	0x80	blend0_dummy_data_cb : //unsigned , default = 8'h80,blend dummy data
7:0	R/W	0x80	blend0_dummy_data_cr : //unsigned , default = 8'h80 ,blend dummy data

Table 10-1461 VPP_PRE_BLEND_DUMMY_ALPHA 0x3962

Bit(s)	R/W	Default	Description
28:20	R/W	0x0	blend0_dummy_alpha : //unsigned , default = 9'h0,blend dummy alpha
19:11	R/W	0x0	blend1_dummy_alpha : //unsigned , default = 9'h0,blend dummy alpha
8:0	R/W	0x0	blend2_dummy_alpha : //unsigned , default = 9'h0,blend dummy alpha

Amlogic Proprietary and Confidential
Copyright © Amlogic. All rights reserved.

Table 10-1462 VPP_PRE_BLEND2_RO_CURRENT_XY 0x3963

Bit(s)	R/W	Default	Description
28:16	R.O	0x0	ro_current_x : //unsigned , default = 32'h0,blend out x point
12:0	R.O	0x0	ro_current_y : //unsigned , default = 32'h0,blend out x point

Table 10-1463 VPP_POST_PRE_BLEND_CTRL 0x3967

Bit(s)	R/W	Default	Description
27:20	R/W	0x4	hold_lines : //unsigned , default = 8'h4,blend work after hold_lines line after go_ field
1:0	R/W	0x1	gclk_ctrl : //unsigned , default = 16'h1,gating ctrl

Table 10-1464 VPP_POST_BLEND_BLEND_DUMMY_DATA 0x3968

Bit(s)	R/W	Default	Description
23:16	R/W	0x0	blend0_dummy_data_y : //unsigned , default = 8'h0,blend dummy data
15:8	R/W	0x80	blend0_dummy_data_cb : //unsigned , default = 8'h80,blend dummy data
7:0	R/W	0x80	blend0_dummy_data_cr : //unsigned , default = 8'h80 ,blend dummy data

Table 10-1465 VPP_POST-BLEND_DUMMY_ALPHA 0x3969

Bit(s)	R/W	Default	Description
28:20	R/W	0x0	blend0_dummy_alpha : //unsigned , default = 9'h0,blend dummy alpha
19:11	R/W	0x0	blend1_dummy_alpha : //unsigned , default = 9'h0,blend dummy alpha
8:0	R/W	0x0	blend2_dummy_alpha : //unsigned , default = 9'h0,blend dummy alpha

Table 10-1466 VPP_POST_BLEND2_RO_CURRENT_XY 0x396a

Bit(s)	R/W	Default	Description
28:16	R.O	0x0	ro_current_x : //unsigned , default = 32'h0,blend out x point
12:0	R.O	0x0	ro_current_y : //unsigned , default = 32'h0,blend out x point

10.2.3.20 VPP Registers

Table 10-1467 VPP_DUMMY_DATA 0x1d00

Bit(s)	R/W	Default	Description
29:20	R/W	0	VD1_SC_Y : // unsigned , default = 0x10,dummy data used in the VD1 scaler,according VPP_DOLBY_CTRL[17] 1:set 8bit value 2:set 10bit value
19:10	R/W	0	VD1_SC_CB : // unsigned , default = 0x80,dummy data used in the VD1 scaler, according VPP_DOLBY_CTRL[17] 1:set 8bit value 2:set 10bit value
9 :0	R/W	0	VD1_SC_CR : // unsigned , default = 0x80,dummy data used in the VD1 scaler, according VPP_DOLBY_CTRL[17] 1:set 8bit value 2:set 10bit value

Amlogic Proprietary and Confidential
Copyright © Amlogic. All rights reserved.

Table 10-1468 VPP_LINE_IN_LENGTH 0x1d01

Bit(s)	R/W	Default	Description
13:0	R/W	14	line_in_length : // unsigned , default = 14'd1920,VD1 scaler input hsize

Table 10-1469 VPP_PIC_IN_HEIGHT 0x1d02

Bit(s)	R/W	Default	Description
12:0	R/W	0x1fff	line_in_height : // unsigned , default = 13'h1fff,VD1 scaler input vsize

Table 10-1470 VPP_PREBLEND_VD1_H_START_END 0x1d1a

Bit(s)	R/W	Default	Description
28:16	R/W	0	start : //unsigned , default = 0x0000 ,preblend video1 horizontal start
12:0	R/W	0	end : //unsigned , default = 0x077f ,preblend video1 horizontal end

Table 10-1471 VPP_PREBLEND_VD1_V_START_END 0x1d1b

Bit(s)	R/W	Default	Description
28:16	R/W	0	start : //unsigned , default = 0x0000 ,preblend video1 vertical start
12:0	R/W	0	end : //unsigned , default = 0x0437 ,preblend video1 vertical end

Table 10-1472 VPP_POSTBLEND_VD1_H_START_END 0x1d1c

Bit(s)	R/W	Default	Description
28:16	R/W	0	start : //unsigned , default = 0x0000 ,postblend video1 horizontal start
12:0	R/W	0	end : //unsigned , default = 0x077f ,postblend video1 horizontal end

Table 10-1473 VPP_POSTBLEND_VD1_V_START_END 0x1d1d

Bit(s)	R/W	Default	Description
31:29	/	/	/
28:16	R/W	0	//unsigned , default = 0x0000 ,postblend video1 vertical start Bit
15:13	/	/	/
12:0		0x077f	//unsigned , default = 0x077f ,postblend video1 vertical end

Table 10-1474 VPP_BLEND_VD2_H_START_END 0x1d1e

Bit(s)	R/W	Default	Description
28:16	R/W	0	start : //unsigned , default = 0x0000 ,preblend/postblend video2 horizontal start
12:0	R/W	0	end : //unsigned , default = 0x077f ,preblend/postblend video2 horizontal end

Amlogic Proprietary and Confidential
Copyright © Amlogic. All rights reserved.

Table 10-1475 VPP_BLEND_VD2_V_START_END 0x1d1f

Bit(s)	R/W	Default	Description
28:16	R/W	0	start : //unsigned , default = 0x0000 ,preblend/postblend video2 vertical start
12:0	R/W	0	end : //unsigned , default = 0x077f ,preblend/postblend video2 vertical end

Table 10-1476 VPP_PREBLEND_H_SIZE 0x1d20

Bit(s)	R/W	Default	Description
29:16	R/W	14	prebld_v_size : //unsigned , default = 14'd1080 ,preblend output vsize
13:0	R/W	14	prebld_h_size : //unsigned , default = 14'd1920 ,preblend output hsize

Table 10-1477 VPP_POSTBLEND_H_SIZE 0x1d21

Bit(s)	R/W	Default	Description
29:16	R/W	14	postbld_v_size : //unsigned , default = 14'd1080 ,postblend output vsize
13:0	R/W	14	postbld_h_size : //unsigned , default = 14'd1920 ,postblend output hsize

Table 10-1478 VPP hold lines VPP_HOLD_LINES 0x1d22

Bit(s)	R/W	Default	Description
15:8	R/W	4	prebld_hold_lines : //unsigned , default = 4,preblend hold lines
7:0	R/W	4	postbld_hold_lines : //unsigned , default = 4,postblend hold lines

Table 10-1479 VPP_MISC 0x1d26

Bit(s)	R/W	Default	Description
30	R/W	0	Color_manage_en //CM2 top enable
29	R/W	0	vpp_vks_en : //unsigned , default = 0 , vkstone enable
28	R/W	0	color_manage_en : //unsigned , default = 0 , color management enable
27	R/W	0	vd2_use_viu2_out_en : //unsigned , default = 0 , if true, vd2 use viu2 output as the input, otherwise use normal vd2 from memory
26:18	R/W	0	vd2 : alpha //unsigned , default = 0 , video 2 prebld/postbld alpha
8	R/W	1	0: vpp_gamma before 3D_LUT 1: gammar after 3D_lut
7	R/W	1	postbld_en : //unsigned , default = 1 , postblend module enable ,din_reoder_sel of post blend can work when postbld_en high.
6	R/W	0	prebld_en : //unsigned , default = 0 , preblend module enable ,din_reoder_sel of post blend can work when postbld_en high.
3	R/W	0	sr4c1_path_sel : //unsigned , default = 0 , choose sr1 position 1:sr1 bettwen dnlp & CM 0:sr1 bettwen position after postblend
2	R/W	0	disable_rst_afifo : //unsigned , default = 0 , if true, disable resetting async fifo every vsync, otherwise every vsync the aync fifo will be reseted.
1	R/W	0	sr4c0_path_sel : //unsigned , default = 0 , choose sr0 position 1:sr0 bettwen prebld & vd1_scale 0:sr0 bettwen position after dnlp

Amlogic Proprietary and Confidential
Copyright © Amlogic. All rights reserved.

Table 10-1480 VPP_OFIFO_SIZE 0x1d27

Bit(s)	R/W	Default	Description
31:20	R/W	0	ofifo_line_lenm1 : //unsigned , default = 0xfff , ofifo line length minus 1
19	R/W	0	vs_ctrl : //unsigned , default = 0 , if true invert input vs
18	R/W	0	hs_ctrl : //unsigned , default = 0 , if true invert input hs
17	R/W	0	force_top_bot_field_en : //unsigned , default = 0 , force top/bottom field, enable
16	R/W	0	fforce_top_bot_field : //unsigned , default = 0 , force top/bottom field, 0: top, 1: bottom
15	R/W	0	force_go_field : //unsigned , default = 0 , force one go_field, one pluse, write only
14	R/W	0	force_go_line : //unsigned , default = 0 , force one go_line, one pluse, write only
13:0	R/W	0	ofifo_size : //unsigned , default = 0x1000 , ofifo size (actually only bit 13:1 is valid), always even number ,max 4096

Table 10-1481 VPP_FIFO_STATUS 0x1d28

Bit(s)	R/W	Default	Description
29:25	R.O	0	ro_sco_ff_buf_count : //unsigned , default = 0,current scale out fifo counter
24:14	R.O	0	ro_afifo_count : //unsigned , default = 0,current enc afifo counter
13:1	R.O	0	ro_ofifo_buf_count : //unsigned , default = 0,current vpp line fifo ofifo counter

Table 10-1482 VPP_MATRIX_PROBE_COLOR 0x1d5c

Bit(s)	R/W	Default	Description
31:24	R.O	0	ro_probe_y_l : //unsigned , default = 0,low 8 bits of component 0
23:12	R.O	0	ro_probe_cr : //unsigned , default = 0,component 1
11:0	R.O	0	ro_probe_cb : //unsigned , default = 0,component 2

Table 10-1483 VPP_MATRIX_PROBE_COLOR1 0x1dd7

Bit(s)	R/W	Default	Description
31	R.O	0x0	ro_probe_pix_v : //it means this probe is valid in the last field/frame
3:0	R.O	0	ro_probe_y_h : //unsigned , default = 0,high 4 bits of component 0

Table 10-1484 VPP_MATRIX_HL_COLOR 0x1d5d

Bit(s)	R/W	Default	Description
23:16	R/W	0	hl_y : //unsigned , default = 0,component 0
15:8	R/W	0	hl_cb : //unsigned , default = 0,component 1
7:0	R/W	0	hl_cr : //unsigned , default = 0,component 2

Amlogic Proprietary and Confidential
Copyright © Amlogic. All rights reserved.

Table 10-1485 VPP_MATRIX_PROBE_POS 0x1d5e

Bit(s)	R/W	Default	Description
28:16	R/W	0	probe_x : //unsigned , default = 0,probe x, position
12:0	R/W	0	probe_y : //unsigned , default = 0,probe y, position

Table 10-1486 VPP_MATRIX_CTRL 0x1d5f

Bit(s)	R/W	Default	Description
16	R/W	0	highlight_en : //unsigned , default = 0, highlight enable
15	R/W	0	probe_post : //unsigned , default = 0, if true, probe pixel data after matrix, otherwise probe pixel data before matrix
14:10	R/W	0	probel_sel : //unsigned , default = 0, active when VIU_SECURE_REG[9] high, probel sel : 5'b00001 :vadj1 5'b00010 :vadj2 5'b00100 :osd2 5'b01000 :postbld 5'b10000 :osd1

Table 10-1487 VPP_GAINOFF_CTRL0 0x1d6a

Bit(s)	R/W	Default	Description
31	R/W	0	enable : //unsigned , default = 0, gainoff module enable
30	R/W	0	enable_sel : //unsigned , default = 0, gainoff module enable sync sel
26:16	R/W	0	gain0 : //unsigned , default = 0, gainoff module gain0
10:0	R/W	0	gain1 : //unsigned , default = 0, gainoff module gain1

Table 10-1488 VPP_GAINOFF_CTRL1 0x1d6b

Bit(s)	R/W	Default	Description
26:16	R/W	0	gain2 : //unsigned , default = 0, gainoff module gain2
(DW +0):0	R/W	0	offset0 : //signed ,bitwidth is DW+1,DW is the chip path data width, default = 0, gainoff module offset0

Table 10-1489 VPP_GAINOFF_CTRL2 0x1d6c

Bit(s)	R/W	Default	Description
(DW +16):16	R/W	0	offset1 : //signed ,bitwidth is DW+1,DW is the chip path data width, default = 0, gainoff module offset1
(DW +0):0	R/W	0	offset2 : //signed , bitwidth is DW+1,DW is the chip path data width,default = 0, gainoff module offset2

Amlogic Proprietary and Confidential
Copyright © Amlogic. All rights reserved.

Table 10-1490 VPP_GAINOFF_CTRL3 0x1d6d

Bit(s)	R/W	Default	Description
(DW +16):16	R/W	0	pre_offset0 : //signed , bitwidth is DW+1,DW is the chip path data width,default = 0, gainoff module pre_offset0
(DW +0):0	R/W	0	pre_offset1 : //signed , bitwidth is DW+1,DW is the chip path data width,default = 0, gainoff module pre_offset1

Table 10-1491 VPP_GAINOFF_CTRL4 0x1d6e

Bit(s)	R/W	Default	Description
(DW +0):0	R/W	0	pre_offset2 : //signed , bitwidth is DW+1,DW is the chip path data width,default = 0, gainoff module pre_offset2

Table 10-1492 VPP_GAINOFF_GCLK_CTRL 0x1d6f

Bit(s)	R/W	Default	Description
1:0	R/W	0	gainoff_gclk_ctrl : //unsigned , default = 0,gainoff_gclk_ctrl

Table 10-1493 VPP_GCLK_CTRL0 0x1d72

Bit(s)	R/W	Default	Description
5:4	R/W	0	ofifo_clk1 : //unsigned , default = 0,gating clock of out linefifo in vpp
3:2	R/W	0	clk0 : //unsigned , default = 0,clk swtich of all vpp module
1	R/W	0	reg_gclk : //unsigned , default = 0,registers gate clk of vpp module

Table 10-1494 VPP_GCLK_CTRL1 0x1d73

Bit(s)	R/W	Default	Description
27:20	R/W	0	gclk_ctrl_wm : //unsigned , default = 0,gating clock of water_mark
18:15	R/W	0	dolby3_gclk_ctrl : //unsigned , default = 0,gating clock of dolby3
3:0	R/W	0	cm_gclk_ctrl : //unsigned , default = 0,gating clock of color manage

Table 10-1495 VPP_MISC1 0x1d76

Bit(s)	R/W	Default	Description
20:12	R/W	0	vd1_prebld_alpha : //unsigned , default = 0,VD1 alpha for preblend
8:0	R/W	0	vd1_postbld_alpha : //unsigned , default = 0,VD1 alpha for postblend

Table 10-1496 VPP_SRSCL_GCLK_CTRL 0x1d77

Bit(s)	R/W	Default	Description
15:8	R/W	0	gclk_ctrl_sr1 : //unsigned , default = 0 , gating clock of sr1
7:0	R/W	0	gclk_ctrl_sr0 : //unsigned , default = 0 , gating clock of sr0

Amlogic Proprietary and Confidential
Copyright © Amlogic. All rights reserved.

Table 10-1497 VPP_BLACKEXT_CTRL 0x1d80

Bit(s)	R/W	Default	Description
31:24	R/W	0	blackext_start : //unsigned , default = 0 ,blackext_start
23:16	R/W	0	blackext_slope1 : //unsigned , default = 0 ,blackext_slope1
15:8	R/W	0	blackext_midpt : //unsigned , default = 0 ,blackext_midpt
7:0	R/W	0	blackext_slope2 : //unsigned , default = 0 ,blackext_slope2

Table 10-1498 VPP_DNLP_CTRL_00 0x1d81

Bit(s)	R/W	Default	Description
31:24	R/W	0	data0 : //unsigned , default = 0 ,bottom of region03 output value
23:16	R/W	0	data1 : //unsigned , default = 0 ,bottom of region02 output value
15:8	R/W	0	data2 : //unsigned , default = 0 ,bottom of region01 output value
7:0	R/W	0	data3 : //unsigned , default = 0 ,bottom of region00 output value

Table 10-1499 VPP_DNLP_CTRL_01 0x1d82

Bit(s)	R/W	Default	Description
31:24	R/W	0	data0 : //unsigned , default = 0 ,bottom of region07 output value
23:16	R/W	0	data1 : //unsigned , default = 0 ,bottom of region06 output value
15:8	R/W	0	data2 : //unsigned , default = 0 ,bottom of region05 output value
7:0	R/W	0	data3 : //unsigned , default = 0 ,bottom of region04 output value

Table 10-1500 VPP_DNLP_CTRL_02 0x1d83

Bit(s)	R/W	Default	Description
31:24	R/W	0	data0 : //unsigned , default = 0 ,bottom of region11 output value
23:16	R/W	0	data1 : //unsigned , default = 0 ,bottom of region10 output value
15:8	R/W	0	data2 : //unsigned , default = 0 ,bottom of region09 output value
7:0	R/W	0	data3 : //unsigned , default = 0 ,bottom of region08 output value

Table 10-1501 VPP_DNLP_CTRL_03 0x1d84

Bit(s)	R/W	Default	Description
31:24	R/W	0	data0 : //unsigned , default = 0 ,bottom of region15 output value
23:16	R/W	0	data1 : //unsigned , default = 0 ,bottom of region14 output value
15:8	R/W	0	data2 : //unsigned , default = 0 ,bottom of region13 output value
7:0	R/W	0	data3 : //unsigned , default = 0 ,bottom of region12 output value

Amlogic Proprietary and Confidential
Copyright © Amlogic. All rights reserved.

Table 10-1502 VPP_DNLP_CTRL_04 0x1d85

Bit(s)	R/W	Default	Description
31:24	R/W	0	data0 : //unsigned , default = 0 ,bottom of region19 output value
23:16	R/W	0	data1 : //unsigned , default = 0 ,bottom of region18 output value
15:8	R/W	0	data2 : //unsigned , default = 0 ,bottom of region17 output value
7:0	R/W	0	data3 : //unsigned , default = 0 ,bottom of region16 output value

Table 10-1503 VPP_DNLP_CTRL_05 0x1d86

Bit(s)	R/W	Default	Description
31:24	R/W	0	data0 : //unsigned , default = 0 ,bottom of region23 output value
23:16	R/W	0	data1 : //unsigned , default = 0 ,bottom of region22 output value
15:8	R/W	0	data2 : //unsigned , default = 0 ,bottom of region21 output value
7:0	R/W	0	data3 : //unsigned , default = 0 ,bottom of region20 output value

Table 10-1504 VPP_DNLP_CTRL_06 0x1d87

Bit(s)	R/W	Default	Description
31:24	R/W	0	data0 : //unsigned , default = 0 ,bottom of region27 output value
23:16	R/W	0	data1 : //unsigned , default = 0 ,bottom of region26 output value
15:8	R/W	0	data2 : //unsigned , default = 0 ,bottom of region25 output value
7:0	R/W	0	data3 : //unsigned , default = 0 ,bottom of region24 output value

Table 10-1505 VPP_DNLP_CTRL_07 0x1d88

Bit(s)	R/W	Default	Description
31:24	R/W	0	data0 : //unsigned , default = 0 ,bottom of region31 output value
23:16	R/W	0	data1 : //unsigned , default = 0 ,bottom of region30 output value
15:8	R/W	0	data2 : //unsigned , default = 0 ,bottom of region29 output value
7:0	R/W	0	data3 : //unsigned , default = 0 ,bottom of region28 output value

Table 10-1506 VPP_DNLP_CTRL_08 0x1d89

Bit(s)	R/W	Default	Description
31:24	R/W	0	data0 : //unsigned , default = 0 ,bottom of region35 output value
23:16	R/W	0	data1 : //unsigned , default = 0 ,bottom of region34 output value
15:8	R/W	0	data2 : //unsigned , default = 0 ,bottom of region33 output value
7:0	R/W	0	data3 : //unsigned , default = 0 ,bottom of region32 output value

Amlogic Proprietary and Confidential
Copyright © Amlogic. All rights reserved.

Table 10-1507 VPP_DNLP_CTRL_09 0x1d8a

Bit(s)	R/W	Default	Description
31:24	R/W	0	data0 : //unsigned , default = 0 ,bottom of region39 output value
23:16	R/W	0	data1 : //unsigned , default = 0 ,bottom of region38 output value
15:8	R/W	0	data2 : //unsigned , default = 0 ,bottom of region37 output value
7:0	R/W	0	data3 : //unsigned , default = 0 ,bottom of region36 output value

Table 10-1508 VPP_DNLP_CTRL_10 0x1d8b

Bit(s)	R/W	Default	Description
31:24	R/W	0	data0 : //unsigned , default = 0 ,bottom of region43 output value
23:16	R/W	0	data1 : //unsigned , default = 0 ,bottom of region42 output value
15:8	R/W	0	data2 : //unsigned , default = 0 ,bottom of region41 output value
7:0	R/W	0	data3 : //unsigned , default = 0 ,bottom of region40 output value

Table 10-1509 VPP_DNLP_CTRL_11 0x1d8c

Bit(s)	R/W	Default	Description
31:24	R/W	0	data0 : //unsigned , default = 0 ,bottom of region47 output value
23:16	R/W	0	data1 : //unsigned , default = 0 ,bottom of region46 output value
15:8	R/W	0	data2 : //unsigned , default = 0 ,bottom of region45 output value
7:0	R/W	0	data3 : //unsigned , default = 0 ,bottom of region44 output value

Table 10-1510 VPP_DNLP_CTRL_12 0x1d8d

Bit(s)	R/W	Default	Description
31:24	R/W	0	data0 : //unsigned , default = 0 ,bottom of region51 output value
23:16	R/W	0	data1 : //unsigned , default = 0 ,bottom of region50 output value
15:8	R/W	0	data2 : //unsigned , default = 0 ,bottom of region49 output value
7:0	R/W	0	data3 : //unsigned , default = 0 ,bottom of region48 output value

Table 10-1511 VPP_DNLP_CTRL_13 0x1d8e

Bit(s)	R/W	Default	Description
31:24	R/W	0	data0 : //unsigned , default = 0 ,bottom of region55 output value
23:16	R/W	0	data1 : //unsigned , default = 0 ,bottom of region54 output value
15:8	R/W	0	data2 : //unsigned , default = 0 ,bottom of region53 output value
7:0	R/W	0	data3 : //unsigned , default = 0 ,bottom of region52 output value

Amlogic Proprietary and Confidential
Copyright © Amlogic. All rights reserved.

Table 10-1512 VPP_DNLP_CTRL_14 0x1d8f

Bit(s)	R/W	Default	Description
31:24	R/W	0	data0 : //unsigned , default = 0 ,bottom of region59 output value
23:16	R/W	0	data1 : //unsigned , default = 0 ,bottom of region58 output value
15:8	R/W	0	data2 : //unsigned , default = 0 ,bottom of region57 output value
7:0	R/W	0	data3 : //unsigned , default = 0 ,bottom of region56 output value

Table 10-1513 VPP_DNLP_CTRL_15 0x1d90

Bit(s)	R/W	Default	Description
31:24	R/W	0	data0 : //unsigned , default = 0 ,bottom of region63 output value
23:16	R/W	0	data1 : //unsigned , default = 0 ,bottom of region62 output value
15:8	R/W	0	data2 : //unsigned , default = 0 ,bottom of region61 output value
7:0	R/W	0	data3 : //unsigned , default = 0 ,bottom of region60 output value

Table 10-1514 VPP_SRSHARP0_CTRL 0x1d91

Bit(s)	R/W	Default	Description
28:16	R/W	0	srsharp_demo_split_sz : //unsigned , default = 0 ,srsharp demo top/bot left/right width
5:4	R/W	0	srsharp_demo_disp_post : //unsigned , default = 0 ,srsharp demo display position
3	R/W	0	srsharp_demo_en : //unsigned , default = 0 ,srsharp demo enable
2	R/W	0	srsharp_c444to422_en : //unsigned , default = 0 ,srsharp format444 convert 422 enable
1	R/W	0	srsharp_buf_en : //unsigned , default = 0 ,srsharp buffer enable
0	R/W	0	srsharp_en : //unsigned , default = 0 ,srsharp enable

Table 10-1515 VPP_SRSHARP1_CTRL 0x1d92

Bit(s)	R/W	Default	Description
28:16	R/W	0	srsharp_demo_split_sz : //unsigned , default = 0 ,srsharp demo top/bot left/right width
5:4	R/W	0	srsharp_demo_disp_post : //unsigned , default = 0 ,srsharp demo display position
3	R/W	0	srsharp_demo_en : //unsigned , default = 0 ,srsharp demo enable
2	R/W	0	srsharp_c444to422_en : //unsigned , default = 0 ,srsharp format444 convert 422 enable
1	R/W	0	srsharp_buf_en : //unsigned , default = 0 ,srsharp buffer enable
0	R/W	0	srsharp_en : //unsigned , default = 0 ,srsharp enable

Amlogic Proprietary and Confidential
Copyright © Amlogic. All rights reserved.

Table 10-1516 VPP_DOLBY_CTRL 0x1d93

Bit(s)	R/W	Default	Description
25:24	R/W	0	dolby3_path_sel : //unsigned , default = 0 ,1:dolby2->osd_mat->post_blend->dolby3->wm 0:dolby2->dolby3->osd_mat->post_blend->wm
20	R/W	0	Wap vpp vd1/vd1 0:unswap 1:swap
17	R/W	0	pps_dummy_data_mode : //unsigned , default = 0 ,pps_dummy_data_mode 1: vd1_scale need setting 8 bits 0:vd1_scale need setting 10 bits
16	/	/	reserved
10	R/W	0	vpp_clip_ext_mode2 : //unsigned , default = 0 ,Vpp out clip mode 1:10bit 0:12bit
9	R/W	0	vpp_clip_ext_mode1 : //unsigned , default = 0 ,Vpp Vd2 input clip mode 1:10bit 0:12bit
8	R/W	0	vpp_clip_ext_mode0 : //unsigned , default = 0 ,Vpp Vd1 input clip mode 1:10bit 0:12bit
3	R/W	0	vpp_dolby3_en : //unsigned , default = 0 ,dolby_core3 enable,active high
2	R/W	0	vpp_dpath_sel2 : //unsigned , default = 0 ,by_pass from post2_marix to outbuffer
1	R/W	0	vpp_dpath_sel1 : //unsigned , default = 0 ,by_pass from gainoff to vks
0	R/W	0	vpp_dpath_sel0 : //unsigned , default = 0 ,1: by_pass from preblend to VADJ1 0: unbypass

Table 10-1517 VPP_SYNC_SEL0 0x1d96

Bit(s)	R/W	Default	Description
31:0	R/W	0	sync_sel_bits : //unsigned ,default = 0,sync_sel bits for VPP_DOLBY_CTRL

Table 10-1518 VPP_CCORING_CTRL 0x1da0

Bit(s)	R/W	Default	Description
27:16	R/W	0	reg_bypass_ccoring_ythd : // unsigned , default = 0 , bypass_ccoring_ythd
15:8	R/W	0	ccoring_th : // unsigned , default = 0 , Chroma coring threshold
3:0	R/W	0	ccoring_slope : // unsigned , default = 0 , Chroma coring slope

Table 10-1519 VPP_VE_ENABLE_CTRL 0x1da1

Bit(s)	R/W	Default	Description
29:28	R/W	0	dnlp_gclk_ctrl : // unsigned , default = 0 ,dnlp gclk ctrl
27:26	R/W	0	blackext_gclk_ctrl : // unsigned , default = 0 ,blackext gclk ctrl
25:24	R/W	0	ccoring_gclk_ctrl : // unsigned , default = 0 ,chroma coring gclk ctrl
20	R/W	0	demo_ccoring_enable : // unsigned , default = 0 ,demo chroma coring enable
19	R/W	0	demo_blackext_enable : // unsigned , default = 0 ,demo black enxtension enable
18	R/W	0	demo_dnlp_enable : // unsigned , default = 0 ,demo dynamic nonlinear luma processing enable
15:14	R/W	0	demo_disp_position : // unsigned , default = 0 ,2'b00: demo adjust on top, 2'b01: demo adjust on bottom, 2'b10: demo adjust on left, 2'b11: demo adjust on right

Amlogic Proprietary and Confidential
Copyright © Amlogic. All rights reserved.

Bit(s)	R/W	Default	Description
4	R/W	0	ccoring_en : // unsigned , default = 0 , chroma coring enable
3	R/W	0	blackext_en : // unsigned , default = 0 , black enxtension enable
2	R/W	0	dnlp_en : // unsigned , default = 0 , dynamic nonlinear luma processing enable

Table 10-1520 VPP_VE_DEMO_LEFT_TOP_SCREEN_WIDTH 0x1da2

Bit(s)	R/W	Default	Description
12:0	R/W	0	ve_demo_left_top_screen_width : // unsigned , default = 0 demo left or top screen width

Table 10-1521 VPP_VE_DEMO_CENTER_BAR 0x1da3

Bit(s)	R/W	Default	Description
31	R/W	0	ve_demo_center_bar : // unsigned , default = 0 center bar enable
27:24	R/W	0	ve_demo_center_bar : // unsigned , default = 0 center bar width (*2)
23:16	R/W	0	ve_demo_center_bar : // unsigned , default = 0 center bar Cr (*4)
15:8	R/W	0	ve_demo_center_bar : // unsigned , default = 0 center bar Cb (*4)
7:0	R/W	0	ve_demo_center_bar : // unsigned , default = 0 center bar y (*4)

Table 10-1522 VPP_VE_H_V_SIZE 0x1da4

Bit(s)	R/W	Default	Description
28:16	R/W	780	ve_line_length : // unsigned , default = 780 ve_line_length
12:0	R/W	438	ve_pic_height : // unsigned , default = 438 ve_pic_height

Table 10-1523 VPP_OUT_H_V_SIZE 0x1da5

Bit(s)	R/W	Default	Description
28:16	R/W	780	vppout_line_length : / unsigned , default = 780 vd1_scale_out hsize
12:0	R/W	438	vppout_pic_height : // unsigned , default = 438 vd1_scale_out vsize

Table 10-1524 VPP_VDO_MEAS_CTRL 0x1da8

Bit(s)	R/W	Default	Description
10:0	R/W	0	vdo_meas_ctrl : // unsigned , default = 0 vdo_meas_ctrl

Amlogic Proprietary and Confidential
Copyright © Amlogic. All rights reserved.

Table 10-1525 VPP_VDO_MEAS_VS_COUNT_HI 0x1da9

Bit(s)	R/W	Default	Description
19 :16	RO	0	ro_ind_meas_count_n // unsigned , default = 0 ind_meas_count_n, every number of sync_span vsyncs, this counter add 1
15 :0,	RO	0	ro_counter_h // unsigned , default = 0 high bit portion of counter

Table 10-1526 VPP_VDO_MEAS_VS_COUNT_LO 0x1daa

Bit(s)	R/W	Default	Description
31 :0	RO	0	ro_counter_l // unsigned , default = 0,low bit portion of counter

Table 10-1527 VPP_INPUT_CTRL 0x1dab

Bit(s)	R/W	Default	Description
11:9	R/W	0	vd2_sel : // unsigned , default = 0, 001: select vd1_din, 010: select vd2_din, 011: select d2d3_l_din, 100: d2d3_r_din, otherwise no selection
8:6	R/W	0	vd1_l_sel : // unsigned , default = 0, 001: select vd1_din, 010: select vd2_din, 011: select d2d3_l_din, 100: d2d3_r_din, otherwise no selection,vd1_l_sel selected cannot be used as the source of vd1_r_sel or vd2_sel
5:3	R/W	0	vd1_r_sel : // unsigned , default = 0, 001: select vd1_din, 010: select vd2_din, 011: select d2d3_l_din, 100: d2d3_r_din, otherwise no selection,useful only vd1_interleave_mode is not 00. And the source vd1_r_sel used can not used for the vd2_sel any more bit 2:0 vd1_interleave_mode // unsigned , default = 0, 000: no interleave, 001: pixel interleaving, 010: line interleaving, 011: 2 pixel interleaving,100: 2 line interleaving

Table 10-1528 VPP_CTI_CTRL2 0x1dac

Bit(s)	R/W	Default	Description
25:24	R/W	0	cti_bpf_sel : // unsigned , default = 0
20:16	R/W	0	cti_blend_factor_gama : // unsigned , default = 0
12:8	R/W	0	cti_blend_factor_beta : // unsigned , default = 0
4:0	R/W	0	cti_blend_factor_alpha : // unsigned , default = 0

Table 10-1529 VPP_WRBAK_CTRL_SEC 0x1dad

Bit(s)	R/W	Default	Description
31	R/W	0	vpp_wrbak_sel // unsigned , default = 0, 1: VPP_WRBAK_CTRL regs set to vpp_wrbak_data_ini,Cbus can't access 0: VPP_WRBAK_CTRL reg can be written bit
30:0	R/W	0	vpp_wrbak_data_ini // unsigned , default = 0,

Amlogic Proprietary and Confidential
Copyright © Amlogic. All rights reserved.

Table 10-1530 VD1_BLEND_SRC_CTRL_SEC 0x1dae

Bit(s)	R/W	Default	Description
31	R/W	0	vd1_blend_src_sel : // unsigned , default = 0, 1: VD1_BLEND_SRC_CTRL regs set to vd1_blend_src_data_ini,Cbus can't access 0: VD1_BLEND_SRC_CTRL reg can be writen
30:0	R/W	0	vd1_blend_src_data_ini : // unsigned , default = 0,

Table 10-1531 VD2_BLEND_SRC_CTRL_SEC 0x1daf

Bit(s)	R/W	Default	Description
31	R/W	0	vd2_blend_src_sel : // unsigned , default = 0, 1: VD2_BLEND_SRC_CTRL regs set to vd1_blend_src_data_ini,Cbus can't access 0: VD2_BLEND_SRC_CTRL reg can be writen
30:0	R/W	0	vd2_blend_src_data_ini : // unsigned , default = 0,

Table 10-1532 OSD1_BLEND_SRC_CTRL_SEC 0x1db0

Bit(s)	R/W	Default	Description
31	R/W	0	osd1_blend_src_sel : // unsigned , default = 0, 1: OSD1_BLEND_SRC_CTRL regs set to osd1_blend_src_data_ini,Cbus can't access 0: OSD1_BLEND_SRC_CTRL reg can be writen
30:0	R/W	0	osd1_blend_src_data_ini : // unsigned , default = 0,

Table 10-1533 OSD2_BLEND_SRC_CTRL_SEC 0x1db1

Bit(s)	R/W	Default	Description
31	R/W	0	osd2_blend_src_sel : // unsigned , default = 0, 1: OSD2_BLEND_SRC_CTRL regs set to osd2_blend_src_data_ini,Cbus can't access 0: OSD2_BLEND_SRC_CTRL reg can be writen
30:0	R/W	0	osd2_blend_src_data_ini : // unsigned , default = 0,

Table 10-1534 VPP_INT_LINE_NUM 0x1dce

Bit(s)	R/W	Default	Description
12:0	R/W	0x0	interrupt_line_num : //unsigned, default== 0x1fff,line number use to generate interrupt when line == this number

Table 10-1535 VPP_OFIFO_URG_CTRL 0x1dd8

Bit(s)	R/W	Default	Description
31	R/W	0x0	urgent_hold : //unsigned, default== 0, urgent fifo hold enable
28:12	R/W	0x0	urgent_fifo_th : //unsigned, default== 0, urgent fifo hold line threshold
15	R/W	0x0	urgent_ctrl_en : //unsigned, default== 0, urgent_ctrl_en
14	R/W	0x0	urgent_wr : //unsigned, default== 0, urgent_wr, if true for write buffer
13	R/W	0x0	out_inv_en : //unsigned, default== 0, out_inv_en

Amlogic Proprietary and Confidential
Copyright © Amlogic. All rights reserved.

Bit(s)	R/W	Default	Description
12	R/W	0x0	urgent_ini_value : //unsigned, default == 0, urgent_ini_value
11:6	R/W	0x0	up_th : //unsigned, default == 0, up_th up threshold
5:0	R/W	0x0	dn_th : //unsigned, default == 0, dn_th dn threshold

Table 10-1536 VPP_CLIP_MISC0 0x1dd9

Bit(s)	R/W	Default	Description
29:20	R/W	1023	r : // unsigned, default == 1023, final clip r channel top
19:10	R/W	1023	g : // unsigned, default == 1023, final clip g channel top
9: 0	R/W	1023	b : // unsigned, default == 1023, final clip b channel top

Table 10-1537 VPP_CLIP_MISC1 0x1dda

Bit(s)	R/W	Default	Description
29:20	R/W	0x0	r : // unsigned, default == 0, final clip r channel bottom
19:10	R/W	0x0	g : // unsigned, default == 0, final clip g channel bottom
9: 0	R/W	0x0	b : // unsigned, default == 0, final clip b channel bottom

Table 10-1538 VPP_VD1_CLIP_MISC0 0x1de1

Bit(s)	R/W	Default	Description
29:20	R/W	1023	r : //unsigned, default == 1023, vd1 clip r channel top
19:10	R/W	1023	g : //unsigned, default == 1023, vd1 clip g channel top
9: 0	R/W	1023	b : //unsigned, default == 1023, vd1 clip b channel top

Table 10-1539 VPP_VD1_CLIP_MISC1 0x1de2

Bit(s)	R/W	Default	Description
29:20	R/W	0x0	r : //unsigned, default = 0, vd1 clip r channel bottom
19:10	R/W	0x0	g : //unsigned, default = 0, vd1 clip g channel bottom
9: 0	R/W	0x0	b : //unsigned, default = 0, vd1 clip b channel bottom

Table 10-1540 VPP_VD2_CLIP_MISC0 0x1de3

Bit(s)	R/W	Default	Description
29:20	R/W	1023	r : //unsigned, default = 1023, vd2 clip r channel top
19:10	R/W	1023	g : //unsigned, default = 1023, vd2 clip g channel top
9: 0	R/W	1023	b : //unsigned, default = 1023, vd2 clip b channel top

Amlogic Proprietary and Confidential
Copyright © Amlogic. All rights reserved.

Table 10-1541 VPP_VD2_CLIP_MISC1 0x1de4

Bit(s)	R/W	Default	Description
29:20	R/W	0x0	r : // unsigned, default = 0, vd2 clip r channel bottom
19:10	R/W	0x0	g : // unsigned, default = 0, vd2 clip g channel bottom
9: 0	R/W	0x0	b : // unsigned, default = 0, vd2 clip b channel bottom

Table 10-1542 VPP_VD2_HDR_IN_SIZE 0x1df0

Bit(s)	R/W	Default	Description
18:16	R/W	0	vd2_in_v_size : // unsigned, default = 0x2d0, VPP VD2 input vsize
12:0	R/W	0	vd2_in_h_size : // unsigned, default = 0x1e0, VPP VD2 input hsize

Table 10-1543 VPP_OSD1_IN_SIZE 0x1df1

Bit(s)	R/W	Default	Description
18:16	R/W	0	osd1_in_v_size : // unsigned, default = 0x2d0, VPP osd1 input vsize
12:0	R/W	0	osd1_in_h_size : // unsigned, default = 0x1e0, VPP osd1 input hsize

Table 10-1544 VPP_GCLK_CTRL2 0x1df2

Bit(s)	R/W	Default	Description
13:13	R/W	0	vks_gclk_ctrl : // unsigned, default = 0 ,vks gating clock

Table 10-1545 VD2_PPS_DUMMY_DATA 0x1df4

Bit(s)	R/W	Default	Description
23:16	R/W	0x0	Y : //unsigned, default = 0, vd2 scale dummy data
15:8	R/W	0x0	CB : //unsigned, default = 0, vd2 scale dummy data
7: 0	R/W	0x0	CR : //unsigned, default = 0, vd2 scale dummy data

Table 10-1546 VPP_OSD1_BLD_H_SCOPE 0x1df5

Bit(s)	R/W	Default	Description
28:16	R/W	0	blend_osd1_h_start : //unsigned, default = 0x0
12:0	R/W	0	blend_osd1_h_end : //unsigned, default = 0x2d0

Table 10-1547 VPP_OSD1_BLD_V_SCOPE 0x1df6

Bit(s)	R/W	Default	Description
28:16	R/W	0	blend_osd1_v_start : //unsigned, default = 0x0
12:0	R/W	0	blend_osd1_v_end : //unsigned, default = 0x1e0

Amlogic Proprietary and Confidential
Copyright © Amlogic. All rights reserved.

Table 10-1548 VPP_OSD2_BLD_H_SCOPE 0x1df7

Bit(s)	R/W	Default	Description
28:16	R/W	0x0	blend_osd2_h_start : //unsigned, default = 0
12:0	R/W	0x0	blend_osd2_h_end : //unsigned, default = 0x2d0

Table 10-1549 VPP_OSD2_BLD_V_SCOPE 0x1df8

Bit(s)	R/W	Default	Description
28:16	R/W	0x0	blend_osd2_v_start : //unsigned, default = 0
12:0	R/W	0x0	blend_osd2_v_end : //unsigned, default = 0x1e0

Table 10-1550 VPP_WRBAK_CTRL 0x1df9

Bit(s)	R/W	Default	Description
27:16	R/W	0	wrbak_din_lnblank : //unsigned, default = 0,
12:8	R/W	0	wrbak_din_only_en : //unsigned, default = 0, Bit0: vd2 only Bit1: osd1 only Bit2: osd2 only Bit3: vpp out only Bit4: preblend vd1 only
6:4	R/W	0	wrbak_chan1_sel : //unsigned, default = 0,1:vd1 2:vd2 3:osd1 4:osd2 5:posd_blend 6:vpp output 7:preblend vd1
2:0	R/W	0	wrbak_chan0_sel : //unsigned, default = 0,1:vd1 2:vd2 3:osd1 4:osd2 5:posd_blend 6:vpp output 7:preblend vd1

Table 10-1551 VPP_SLEEP_CTRL 0x1dfa

Bit(s)	R/W	Default	Description
31	R/W	1	sleep_always_en : //unsigned, default = 1
30	R/W	0	sleep_always_dis : //unsigned, default = 0
29:16	R/W	0	sleep_line_len : //unsigned, default = 0
15:14	R/W	0	sleep_mode : //unsigned, default = 0
13:0	R/W	0	sleep_beg_line : //unsigned, default = 0

Table 10-1552 VD1_BLEND_SRC_CTRL 0x1dfb

Bit(s)	R/W	Default	Description
16	R/W	0	vd1_postbld_premult : //unsigned, default = 0
11:8	R/W	1	vd1_postbld_src : //unsigned, default = 1 , 0:close 1:vd1 2:vd2 3:osd1 4:osd2
4	R/W	0	vd1_prebld_premult : //unsigned, default = 0
3:0	R/W	1	vd1_prebld_src : //unsigned, default = 1 , 0:close 1:vd1 2:vd2 3:osd1 4:osd2

Amlogic Proprietary and Confidential
Copyright © Amlogic. All rights reserved.

Table 10-1553 VD2_BLEND_SRC_CTRL 0x1dfc

Bit(s)	R/W	Default	Description
20	R/W	0	vd2_blend_path_sel : //unsigned, default = 0
16	R/W	0	vd2_postbld_premult : //unsigned, default = 0
11:8	R/W	2	vd2_postbld_src : //unsigned, default = 2 , 0:close 1:vd1 2:vd2 3:osd1 4:osd2
4	R/W	0	vd2_prebld_premult : //unsigned, default = 0
3:0	R/W	0	vd2_prebld_src : //unsigned, default = 0 ,0:close 1:vd1 2:vd2 3:osd1 4:osd2

Table 10-1554 OSD1_BLEND_SRC_CTRL 0x1dfd

Bit(s)	R/W	Default	Description
20	R/W	0	osd1_blend_path_sel : //unsigned, default = 0
16	R/W	0	osd1_postbld_premult : //unsigned, default = 0
11:8	R/W	3	osd1_postbld_src : //unsigned, default = 3 , 0:close 1:vd1 2:vd2 3:osd1 4:osd2
4	R/W	0	osd1_prebld_premult : //unsigned, default = 0
3:0	R/W	0	osd1_prebld_src : //unsigned, default = 0 ,0:close 1:vd1 2:vd2 3:osd1 4:osd2

Table 10-1555 OSD2_BLEND_SRC_CTRL 0x1dfe

Bit(s)	R/W	Default	Description
20	R/W	0	osd2_blend_path_sel : //unsigned, default = 0
16	R/W	0	osd2_postbld_premult : //unsigned, default = 0
11:8	R/W	4	osd2_postbld_src : //unsigned, default = 4 , 0:close 1:vd1 2:vd2 3:osd1 4:osd2
4	R/W	0	osd2_prebld_premult : //unsigned, default = 0
3:0	R/W	0	osd2_prebld_src : //unsigned, default = 0 , 0:close 1:vd1 2:vd2 3:osd1 4:osd2

Table 10-1556 VPP_CRC_CHK 0x1db3

Bit(s)	R/W	Default	Description
31	W	0	1:write a pulse to start crc
1	W	0	1:pulse start crc (bit31) 0:go_field start crc
0	W	0	reg_crc_en 1:open crc

Table 10-1557 VPP_RO_CRCSUM 0x1db2

Bit(s)	R/W	Default	Description
31-0	R	0	vpp crc result (lock by go_field)

Amlogic Proprietary and Confidential
Copyright © Amlogic. All rights reserved.

Table 10-1558 VPP_OSD_SCALE_CTRL 0x1dff

Bit(s)	R/W	Default	Description
2	R/W	1	10bit_12bit_ext_mode// 1:add low 2bits 2'b00 0:add high two bits 2'b00 Osd1_scale before osd_blend :this should be 0 Osd1_scale after osd_blend :this should be 1
1	R/W	1	10bit_12bit_ext_mode_bypass Osd1_scale before osd_blend :this should be 0 Osd1_scale after osd_blend :this should be 1
0	R/W	0	Osd1 scale position change 0:after osd_blend 1:before osd_blend

10.2.3.21 CM Registers

Table 10-1559 VPP_CHROMA_ADDR_PORT 0x1d70

Bit(s)	R/W	Default	Description
31-0	R/W	0	Color management address port

Table 10-1560 VPP_CHROMA_DATA_PORT 0x1d71

Bit(s)	R/W	Default	Description
31-0	R/W	0	Color management data port

Color management internal registers is indirectly accessed by the registers VPP_CHROMA_ADDR_PORT and VPP_CHROMA_DATA_PORT.

Color management registers

The example to access the Color management registers is like this:

- Wr(VPP_CHROMA_ADDR_PORT);
- Wr(VPP_CHROMA_DATA_PORT):

Table 10-1561 REG_CHROMA_CONTROL 0x30

Bit(s)	R/W	Default	Description
31	R/W	0	reg_chroma_en. enable color manage function 1'b1: enable 1'b0: bypass
6	R/W	0	sat_sel. uv_max or u^2+v^2 selected as sat for reference 1'b1: uv_max(default) 1'b0: u^2+v^2
5	R/W	0	uv_adj_en. final uv_adjust enable 1'b1: enable 1'b0: bypass
2	R/W	0	hue_en. rgb to hue enable 1'b1: enable(default) 1'b0: bypass
1-0	R/W	0	csc_sel. define input YUV with different color type 2'b00: 601(16-235) 2'b01: 709(16-235) 2'b10: 601(0-255) 2'b11: 709(0-255)

Amlogic Proprietary and Confidential
Copyright © Amlogic. All rights reserved.

Table 10-1562 SAT_BYYB_NODE0 0x200

Bit(s)	R/W	Default	Description
31-24	R/W	0	The 4th node, the same as below
23-16	R/W	0	The 3rd node, the same as below
15-8	R/W	0	The 2nd node, the same as below
7-0	R/W	0	Signed, The 1st node about saturation gain offset along Y coordinate, the gain normalized to 128 as “1”.

Table 10-1563 SAT_BYYB_NODE1 0x201

Bit(s)	R/W	Default	Description
31-24	R/W	0	The 8th node, the same as below
23-16	R/W	0	The 7th node, the same as below
15-8	R/W	0	The 6th node, the same as below
7-0	R/W	0	Signed, The 5th node about saturation gain offset along Y coordinate, the gain normalized to 128 as “1”.

Table 10-1564 SAT_BYYB_NODE2 0x202

Bit(s)	R/W	Default	Description
31-8	R/W	0	reserved
7-0	R/W	0	Signed, The 9th node about saturation gain offset along Y coordinate, the gain normalized to 128 as “1”.

Table 10-1565 SAT_SRC_NODE 0x203

Bit(s)	R/W	Default	Description
31-28	R/W	0	reserved
27-16	R/W	0x800	unsign, Threshold of input saturation for second & third piece. i.e. it is boundary for reg_CM2_Adj_Sat_via_HS[1][:]and reg_CM2_Adj_Sat_via_HS[2][:]
15-12	R/W	0	reserved
11-0	R/W	0x400	unsign, Threshold of input saturation for first and second piece.i.e. it is boundary for reg_CM2_Adj_Sat_via_HS[0][:] and reg_CM2_Adj_Sat_via_HS[1][:]

Table 10-1566 CM_ENH_SFT_MODE 0x204

Bit(s)	R/W	Default	Description
31-11	R/W	0	reserved
10-8	R/W	0	Hue offset adjustments scale for Reg_CM2_Adj_Hue_via_H[:]& Reg_CM2_Adj_Hue_via_S[:]& Reg_CM2_Adj_Hue_via_Y[:]: 0: no scale up; 1: upscale by 2 - (-128,127)x2; 2: upscale by 4 - (-128,127)x4; 3: upscale by 8 - (-128,127)x8;

Amlogic Proprietary and Confidential
Copyright © Amlogic. All rights reserved.

Bit(s)	R/W	Default	Description
7-6	R/W	0	reserved
5-4	R/W	0	Luma offset adjustments scale for reg_CM2_Adj_Luma_via_Hue[i]: 0: no scale up; 1: upscale by2 - (-128,127)x2; 2: upscale by 4 - (-128,127)x4; 3: upscale by 8 - (-128,127)x8;
3-2	R/W	0	Saturation again adjustments scale for reg_CM2_Adj_Sat_via_Y**[:][:]** **&**Reg_CM2_Adj_SatGLBgain_via_Y**[:]**: 0: no scale up/down; 1: dnscale by 2 (-128,127)/2; 2: dnscale by 4 (-128,127)/4; 3: dnscale by 8 (-128,127)/8;
1-0	R/W	0	Saturation again adjustments scale for reg_CM2_Adj_Sat_via_HS[:][:]: 0: no scale up/down; 1: dnscale by 2 (-128,127)/2; 2: dnscale by 4 (-128,127)/4; 3: dnscale by 8 (-128,127)/8;

Table 10-1567 FRM_SIZE 0x205

Bit(s)	R/W	Default	Description
31-29	R/W	0	reserved
28-16	R/W	0x438	The frame height size
15-13	R/W	0	reserved
12-0	R/W	0x780	The frame width size

Table 10-1568 FITLER_CFG 0x206

Bit(s)	R/W	Default	Description
31-5	R/W	0	reserved
4	R/W	0	Horizontal Interleave filter (zero-padding) for 3D considerations: 0: using non-zero padding LPF 1: using zero-padding LPF
3-0	R/W	0	Apply CM on LP portion or original video pixels options: bits[1:0]: is for Luma path control; bits[3:2]: is for U/V path control; 0: no filter but still match the delay; 1: 5 taps LP filter 2: 9 taps LP filter 3: 13 taps LP filter

Table 10-1569 CM_GLOBAL_GAIN 0x207

Bit(s)	R/W	Default	Description
31-28	R/W	0	reserved
27-16	R/W	0x200	Global Saturation Gain for general color adjustments (0~4095 <=> 0~8), 512 normalized to “1”.
15-12	R/W	0	reserved
11-0	R/W	0	Global Hue offsets for general color adjustments (0~4095 <=> 0~360 degree)

Amlogic Proprietary and Confidential
Copyright © Amlogic. All rights reserved.

Table 10-1570 CM_ENH_CTL 0x208

Bit(s)	R/W	Default	Description
31-6	R/W	0	reserved
5	R/W	0	CM Bypass 1: Bypass 0: not bypass
4	R/W	0	Enable signal for CM2 Hue adjustments;
3	R/W	0	Enable signal for CM2 Saturation adjustments;
2	R/W	0	Enable signal for CM2 Luma adjustments;
1	R/W	0	cm2_filt_en :apply cm on lp portion enable
0	R/W	0	CM1 enable signal

Table 10-1571 ROI_X_SCOPE 0x209

Bit(s)	R/W	Default	Description
31-29	R/W	0	reserved
28-16	R/W	0	Ending col index of the Region of Interest (ROI)
15-12	R/W	0	reserved
12-0	R/W	0	Start col index of the Region of Interest (ROI)

Table 10-1572 ROI_Y_SCOPE 0x20a

Bit(s)	R/W	Default	Description
31-29	R/W	0	reserved
28-16	R/W	0	Ending col index of the Region of Interest (ROI)
15-13	R/W	0	reserved
12-0	R/W	0	Start col index of the Region of Interest (ROI)

Table 10-1573 POI_XY_DIR 0x20b

Bit(s)	R/W	Default	Description
31-29	R/W	0	reserved
28-16	R/W	0	Row index of the pixel(position) of Interest (POI)
15-13	R/W	0	reserved
12-0	R/W	0	Col index of the pixel(position) of Interest (POI)

Amlogic Proprietary and Confidential
Copyright © Amlogic. All rights reserved.

Table 10-1574 COI_Y_SCOPE 0x20c

Bit(s)	R/W	Default	Description
31-16	R/W	0	reserved
15-8	R/W	0	Higher bound of luma value for color of interest (COI), 8bits precision
7-0	R/W	0	Lower bound of luma value for color of interest (COI), 8bits precision

Table 10-1575 COI_H_SCOPE 0x20d

Bit(s)	R/W	Default	Description
31-28	R/W	0	reserved
27-16	R/W	0	Higher bound of Hue value for color of interest (COI),12 8bits precision
15-12	R/W	0	reserved
11-0	R/W	0	Lower bound of Hue value for color of interest (COI), 12 bits precision

Table 10-1576 COI_S_SCOPE 0x20e

Bit(s)	R/W	Default	Description
31-28	R/W	0	reserved
27-16	R/W	0	Higher bound of Sat value for color of interest (COI),12 8bits precision
15-12	R/W	0	reserved
11-0	R/W	0	Lower bound of Sat value for color of interest (COI), 12 bits precision

Table 10-1577 IFO_MODE 0x20f

Bit(s)	R/W	Default	Description
31-8	R/W	0	reserved
7-4	R/W	0	Mode control for COI replacement, bit[3:2] control COI pixels: 0: no replacement for COI pixels 1: disable CM2 enhance for COI pixels; 2: keep COI pixels Y but replace HS by [*HS]; 3: replace COI pixels to [*YHS] bit[1:0] controls non-COI pixels: 0: no replacement for non-COI pixels 1: disable CM2 enhance for non-COI pixels; 2: keep COI pixels Y but replace HS by [*HS]; 3: replace non- COI pixels to [*YHS]
3-0	R/W	0	Enhance mode control of pixels inside and outside Region of Interest (ROI) , bit [3:2] control ROI: 0: enable CM2 processing in ROI; 1: disable CM2 processing in ROI; 2: keep ROI pixels Y but replace HS by [*HS]; 3: ow ROI pixels to [*YHS] bit [1:0] control pixels other than ROI similarly. 0: enable CM2 processing in non-ROI; 1: disable CM2 processing in non-ROI; 2: keep ROI pixels Y but replace HS by [*HS]; 3: ow non-ROI pixels to [*YHS]

Amlogic Proprietary and Confidential
Copyright © Amlogic. All rights reserved.

Table 10-1578 POI_RPL_MODE 0x210

Bit(s)	R/W	Default	Description
31-4	R/W	0	reserved
27-16	R/W	0	Reg_cm2_after_v_offset
15-4	R/W	0	Reg_cm2_after_u_offset
3-0	R/W	0	Pixel of interest (POI) replacement mode: 0: no replacements; 1: one pixel of POI position replaced to [*YHS] 2: 3X3 pixels centering POI position replaced to [*YHS] 3: 5X5 pixels centering POI position replaced to [*YHS] … 15: 29X29 pixels centering POI position replaced to [*YHS]

Table 10-1579 DEMO_OWR_YHS 0x211

Bit(s)	R/W	Default	Description
31-24	R/W	0	Saturation value overwriting to ROI/POI/COI; 12bits precision, equal to saturation precision.
23-12	R/W	0	Hue value overwriting to ROI/POI/COI; 12 bits precision, equal to 1/4 hue precision. E.g. { Reg_CM2Demo_OWR_H, 2'h0}
11-0	R/W	0	Luma value overwriting to ROI/POI/COI; 8bits precision, equal to 1/4 luma precision, e.g. { Reg_CM2Demo_OWR_Y, 2'h0}

Table 10-1580 DEMO_POI_Y 0x212

Bit(s)	R/W	Default	Description
31-8	RO	0	Reserved
7-0	RO	0	Luma value for pixel of interest (POI), only get locked higher 8bits

Table 10-1581 DEMO_POI_H 0x213

Bit(s)	R/W	Default	Description
31-12	RO	0	Reserved
11-0	RO	0	Hue value for pixel of interest (POI), only get locked higher 12bits

Table 10-1582 DEMO_POI_S 0x214

Bit(s)	R/W	Default	Description
31-12	RO	0	Reserved
11-0	RO	0	Saturation value for pixel of interest (POI), only get locked higher 12bits

Amlogic Proprietary and Confidential
Copyright © Amlogic. All rights reserved.

Table 10-1583 LUMA_ADJ_LIMT 0x215

Bit(s)	R/W	Default	Description
31-28	R/W	0	reserved
23-16	R/W	0	Slope to do the Luma adjust degrade speed based on Saturation. It was normalized to 16 as '1'.
15-12	R/W	0	reserved
11-0	R/W	0	Threshold to saturation to do Luma adjustment degrade. Only pixels' saturation lower than this threshold will degrade the Luma adjustment.

Table 10-1584 SAT_ADJ_LIMT 0x216

Bit(s)	R/W	Default	Description
31-28	R/W	0	reserved
23-16	R/W	0	Slope to do the Sat adjust degrade speed based on Saturation. It was normalized to 16 as '1'.
15-12	R/W	0	reserved
11-0	R/W	0	Threshold to saturation to do Sat adjustment degrade. Only pixels' saturation lower than this threshold will degrade the Luma adjustment.

Table 10-1585 HUE_ADJ_LIMT 0x217

Bit(s)	R/W	Default	Description
31-28	R/W	0	reserved
23-16	R/W	0	Slope to do the Hue adjust degrade speed based on Saturation. It was normalized to 16 as '1'.
15-12	R/W	0	reserved
11-0	R/W	0	Threshold to saturation to do Hue adjustment degrade. Only pixels' saturation lower than this threshold will degrade the Luma adjustment.

Table 10-1586 UVHS_OFST 0x218

Bit(s)	R/W	Default	Description
31-24	R/W	0	reserved
23-12	R/W	0	U offset after CM2, under s10 scale
11-8	R/W	0	reserved
7-0	R/W	0	U offset before CM2, under s10 scale.

Table 10-1587 HUE_CFG_PARA 0x219

Bit(s)	R/W	Default	Description
31-17	R/W	0	reserved
16	R/W	0	Options to protect HUE after CM2 adjustments. This will be added to avoid HUE distortion if Saturation is enhanced too much.
15-13	R/W	0	Hue adjustment via HS the Saturation division mode: 0: 1024/2048/3072, 4095;

Amlogic Proprietary and Confidential
Copyright © Amlogic. All rights reserved.

Bit(s)	R/W	Default	Description
			1: 512, 1024, 1536, 2048; 2: 256, 512, 768, 1024; 3: 128, 256, 384, 512; 4: 512/1024/2048/4096; 5: 256/512/1024/2048; 6: 128/256/512/1024; 7: 64,128,256,512
12	R/W	0	Hue slice division mode: 0: 32 pieces, 360/32 degrees each slice; 1/up: first 20 slices with 360/64 degrees each slice, others 360/16 degrees each slices. Notes, this option provide options to get more precise Hue adjustments for FTC/ Red and so on
11-0	R/W	0	Hue offset before CM2 adjustment, this will provide options to divide the Hue slices with a precise offset. But need to compensate back with the global Hue after CM2 adjustments

Table 10-1588 DEMO_SPLT_CFG 0x21a

Bit(s)	R/W	Default	Description
31-22	R/W	0	reserved
21-20	R/W	0	Demo split post
19-16	R/W	0	Demo split width
12-0	R/W	0	Demo split mode

Table 10-1589 DEMO_SPLT_YHS 0x21b

Bit(s)	R/W	Default	Description
31-24	R/W	0	Luma value
23-12	R/W	0	Hue value
11-0	R/W	0	Sat value

Table 10-1590 XVYCC_YSCP_REG 0x21c

Bit(s)	R/W	Default	Description
27:16	R/W	0x3ff	xvycc_y_max
11:0	R/W	0x0	xvycc_y_min

Table 10-1591 XVYCC_USCP_REG 0x21d

Bit(s)	R/W	Default	Description
27:16	R/W	0x3ff	xvycc_u_max
11:0	R/W	0x0	xvycc_u_min

Amlogic Proprietary and Confidential
Copyright © Amlogic. All rights reserved.

Table 10-1592 XVYCC_VSCP_REG 0x21e

Bit(s)	R/W	Default	Description
27:16	R/W	0x3ff	xvycc_v_max
11:0	R/W	0x0	xvycc_v_min

Table 10-1593 LUMA_ADJ0_REG 0x21f

Bit(s)	R/W	Default	Description
21:12	R/W	0x0	Reg_cm_luma_blacklevel
11:0	R/W	0x0	Reg_cm_luma_contrast

Table 10-1594 LUMA_ADJ1_REG 0x220

Bit(s)	R/W	Default	Description
28:16	R/W	0x0	Reg_sta_sat_hist_mode
12:0	R/W	0x0	Reg_cm_luma_brightness

Table 10-1595 STA_WIN_XYXY0_REG 0x221

Bit(s)	R/W	Default	Description
29:16	R/W	0x0	Reg_sta_win_xxyy1
13:0	R/W	0x0	Reg_sta_win_xxyy0

Table 10-1596 STA_WIN_XYXY1_REG 0x222

Bit(s)	R/W	Default	Description
29:16	R/W	0x0	Reg_sta_win_xxyy3
13:0	R/W	0x0	Reg_sta_win_xxyy2

Table 10-1597 STA_CFG_REG 0x223

Bit(s)	R/W	Default	Description
31:30	R/W	0x1	Reg_sta_enable
29:24	R/W	0x1d	Reg_sta_hist_scale
23:16	R/W	0x20	Reg_sta_hue_hist_sat_thrd
15:8	R/W	0x1	Reg_sta_blk_thrd
7:0	R/W	0x254	Reg_sta_brt_thrd

Amlogic Proprietary and Confidential
Copyright © Amlogic. All rights reserved.

Table 10-1598 STA_SAT_HIST0_REG 0x224

Bit(s)	R/W	Default	Description
24	R/W	0x0	Reg_cm_ro_frame
23:16	R/W	0x80	Reg_sta_sat_hist_rang_thrd2
15:8	R/W	0x40	Reg_sta_sat_hist_rang_thrd1
7:0	R/W	0x0	Reg_sta_sat_hist_rang_thrd0

Table 10-1599 STA_SAT_HIST1_REG 0x225

Bit(s)	R/W	Default	Description
23:16	R/W	0xff	Reg_sta_sat_hist_rang_thrd5
15:8	R/W	0xff	Reg_sta_sat_hist_rang_thrd4
7:0	R/W	0xc0	Reg_sta_sat_hist_rang_thrd3

Table 10-1600 RO_CM_HUE_HIST_BIN0□RO_CM_HUE_HIST_BIN31 0x226□0x245

Bit(s)	R/W	Default	Description
31:0	RO	0x0	RO_CM_HUE_HIST_BIN0~RO_CM_HUE_HIST_BIN31

Table 10-1601 RO_CM_SAT_HIST_BIN0□RO_CM_SAT_HIST_BIN31 0x246□0x265

Bit(s)	R/W	Default	Description
31:0	RO	0x0	RO_CM_SAT_HIST_BIN0~RO_CM_SAT_HIST_BIN31

Table 10-1602 RO_CM_BLK_BIN 0x266

Bit(s)	R/W	Default	Description
31:0	RO	0x0	RO_CM_BLK_BIN

Table 10-1603 RO_CM_BRT_BIN 0x267

Bit(s)	R/W	Default	Description
31:0	RO	0x0	RO_CM_BRT_BIN

The main adjust parameter is saved according to 32 hue node order, one by one. The parameter of each hue node is same. All the parameter for each hue occupy 5 register-addr-space. For the addr-offset aligned, we allocate 8 addr-space to each node parameter, for example,

The parameter of 1st node uses the address space : 0x100, 0x101, 0x102, 0x103, 0x104,

The 2nd node uses the address space : 0x108, 0x109, 0x10a, 0x10b, 0x10c,

The 3rd node uses the address space : 0x110, 0x111, 0x112, 0x113, 0x114,

Amlogic Proprietary and Confidential
Copyright © Amlogic. All rights reserved.

Table 10-1604 CM2_ENH_COEF0_H00 0x100

Bit(s)	R/W	Default	Description
31-24	R/W	0	Same as last
23-16	R/W	0	Same as last
15-8	R/W	0	Signed, Saturation gain offset for three pieces saturation on Hue section (totally 32 sections) node 0; the gain normalized to 128 as “1”.
7-0	R/W	0	Signed, Luma offsets for Hue section (totally 32 sections) nodes 0 , range (-128,127)

Table 10-1605 CM2_ENH_COEF1_H00 0x101

Bit(s)	R/W	Default	Description
31-24	R/W	0	Signed, Hue offset for each four pieces Luma region on each Hue section (totally 32 sections) nodes, this is for y=2/4, hue node 0
23-16	R/W	0	Signed, Hue offset for each four pieces Luma region on each Hue section (totally 32 sections) nodes, this is for y=1/4, hue node 0
15-8	R/W	0	Signed, Hue offset for each four pieces Luma region on each Hue section (totally 32 sections) nodes, this is for y=0, hue node 0
7-0	R/W	0	Signed, Hue offset on Hue section (totally 32 sections) node 0

Table 10-1606 CM2_ENH_COEF2_H00 0x102

Bit(s)	R/W	Default	Description
31-24	R/W	0	Signed, Hue offset for each four pieces Saturation region on each Hue section (totally 32 sections) nodes; This is for sat = 1/4, hue node 0
23-16	R/W	0	Signed, Hue offset for each four pieces Saturation region on each Hue section (totally 32 sections) nodes; This is for sat = 0, hue node 0
15-8	R/W	0	Signed, Hue offset for each four pieces Luma region on each Hue section (totally 32 sections) nodes, this is for y=4/4, hue node 0
7-0	R/W	0	Signed, Hue offset for each four pieces Luma region on each Hue section (totally 32 sections) nodes, this is for y=3/4, hue node 0

Table 10-1607 CM2_ENH_COEF3_H00 0x103

Bit(s)	R/W	Default	Description
31-24	R/W	0	Saturation gain offset for four pieces Luma on each Hue section (totally 32 sections) nodes; the gain normalized to 128 as “1”. This is for sat = 0, hue node 0
23-16	R/W	0	Signed, Hue offset for each four pieces Saturation region on each Hue section (totally 32 sections) nodes; This is for sat = 4/4, hue node 0
15-8	R/W	0	Signed, Hue offset for each four pieces Saturation region on each Hue section (totally 32 sections) nodes; This is for sat = 3/4, hue node 0
7-0	R/W	0	Signed, Hue offset for each four pieces Saturation region on each Hue section (totally 32 sections) nodes; This is for sat = 2/4, hue node 0

Amlogic Proprietary and Confidential
Copyright © Amlogic. All rights reserved.

Table 10-1608 CM2_ENH_COEF4_H00 0x104

Bit(s)	R/W	Default	Description
31-24	R/W	0	Saturation gain offset for four pieces Luma on each Hue section (totally 32 sections) nodes; the gain normalized to 128 as “1”. This is for sat = 4/4, hue node 0
23-16	R/W	0	Saturation gain offset for four pieces Luma on each Hue section (totally 32 sections) nodes; the gain normalized to 128 as “1”. This is for sat = 3/4, hue node 0
15-8	R/W	0	Saturation gain offset for four pieces Luma on each Hue section (totally 32 sections) nodes; the gain normalized to 128 as “1”. This is for sat = 2/4, hue node 0
7-0	R/W	0	Saturation gain offset for four pieces Luma on each Hue section (totally 32 sections) nodes; the gain normalized to 128 as “1”. This is for sat = 1/4, hue node 0

CM2_ENH_COEF0_H01 0x108

CM2_ENH_COEF1_H01 0x109

CM2_ENH_COEF2_H01 0x10a

CM2_ENH_COEF3_H01 0x10b

CM2_ENH_COEF4_H01 0x10c

CM2_ENH_COEF0_H02 0x110

CM2_ENH_COEF1_H02 0x111

CM2_ENH_COEF2_H02 0x112

CM2_ENH_COEF3_H02 0x113

CM2_ENH_COEF4_H02 0x114

....

CM2_ENH_COEF0_H31 0x1f8

CM2_ENH_COEF1_H31 0x1f9

CM2_ENH_COEF2_H31 0x1fa

CM2_ENH_COEF3_H31 0x1fb

CM2_ENH_COEF4_H31

10.2.3.22 VPP OSD1 SCALER Registers

Table 10-1609 VPP_OSD_VSC_PHASE_STEP 0x5a00

Bit(s)	R/W	Default	Description
27-0	R/W	0x0100-0000	4.24 format

Amlogic Proprietary and Confidential
Copyright © Amlogic. All rights reserved.

Table 10-1610 VPP_OSD_VSC_INI_PHASE 0x5a01

Bit(s)	R/W	Default	Description
31-16	R/W	0x0	bottom vertical scaler initial phase
15-0	R/W	0x0	top vertical scaler initial phase

Table 10-1611 VPP_OSD_VSC_CTRL0 0x5a02

Bit(s)	R/W	Default	Description
25	R/W	0	Repeat last line en : 1:enable repeat last line 0:disable repeat last line
24	R/W	0x0	osd vertical Scaler enable
23	R/W	0x0	osd_prog_interlace 0: current field is progressive, 1: current field is interlace
22-21	R/W	0x0	osd_vsc_double_line_mode, bit1, double input width and half input height, bit0, change line buffer becomes 2 lines
20	R/W	0x0	osd_vsc_phase0_always_en
19	R/W	0x0	osd_vsc_nearest_en
17-16	R/W	0x0	osd_vsc_bot_rpt_l0_num
14-11	R/W	0x0	osd_vsc_bot_ini_rcv_num
9-8	R/W	0x0	osd_vsc_top_rpt_l0_num
6-3	R/W	0x0	osd_vsc_top_ini_rcv_num
2-0	R/W	0x0	osd_vsc_bank_length

Table 10-1612 VPP_OSD_HSC_PHASE_STEP 0x5a03

Bit(s)	R/W	Default	Description
27-0	R/W	0x0100-0000	4.24 format

Table 10-1613 VPP_OSD_HSC_INI_PHASE 0x5a04

Bit(s)	R/W	Default	Description
31-16	R/W	0x0	horizontal scaler initial phase1
15-0	R/W	0x0	horizontal scaler initial phase0

Table 10-1614 VPP_OSD_HSC_CTRL0 0x5a05

Bit(s)	R/W	Default	Description
22	R/W	0x0	osd horizontal Scaler enable
21	R/W	0x0	osd_hsc_double_pix_mode
20	R/W	0x0	osd_hsc_phase0_always_en
19	R/W	0x0	osd_vsc_nearest_en
17-16	R/W	0x0	osd_hsc_rpt_p0_num1

Amlogic Proprietary and Confidential
Copyright © Amlogic. All rights reserved.

Bit(s)	R/W	Default	Description
14-11	R/W	0x0	osd_hsc_ini_rcv_num1
9-8	R/W	0x0	osd_hsc_rpt_p0_num0
6-3	R/W	0x0	osd_hsc_ini_rcv_num0
2-0	R/W	0x0	osd_hsc_bank_length

Table 10-1615 VPP_OSD_HSC_INI_PAT_CTRL 0x5a06

Bit(s)	R/W	Default	Description
15-8	R/W	0x0	for 3D quincunx sub-sampling. pattern, each patten 1 bit, from lsb -> msb
6-4	R/W	0x0	pattern start
2-0	R/W	0x0	pattern end

Table 10-1616 VPP_OSD_SC_DUMMY_DATA 0x5a07

Bit(s)	R/W	Default	Description
31-24	R/W	0x0	componet 0 ,data = (dst_data >> 4) ,so 8 bit in 12bit mode, 6bit in 10bit mode
23-16	R/W	0x0	component 1 ,data = (dst_data >> 4) ,so 8 bit in 12bit mode, 6bit in 10bit mode
15-8	R/W	0x0	component 2 ,data = (dst_data >> 4) ,so 8 bit in 12bit mode, 6bit in 10bit mode
7-0	R/W	0x0	component 3 , alpha

Table 10-1617 VPP_OSD_SC_CTRL0 0x5a08

Bit(s)	R/W	Default	Description
27:16	R/W	0	osd_sc_gclk_ctrl : //unsigned,default = 0,osd_sc_gclk_ctrl
13	R/W	0	osd_sc_din_osd_alpha_mode : //unsigned,default = 0,osc_sc_din_osd2_alpha_mode, 1: (alpha >= 128) ? alpha -1: alpha, 0: (alpha >=1) ? alpha - 1: alpha.
12	R/W	0	osd_sc_dout_alpha_mode : //unsigned,default = 0,osc_sc_alpha_mode, 1: (alpha >= 128) ? alpha + 1: alpha, 0: (alpha >=1) ? alpha + 1: alpha.
11:4	R/W	0	osd_sc_alpha : //unsigned,default = 0,default alpha for vd1 or vd2 if they are selected as the source
3	R/W	0	osd_sc_path_en : //unsigned,default = 0,osd scaler path enable
2	R/W	0	osd_sc_en : //unsigned,default = 0,osd scaler enable

Table 10-1618 VPP_OSD_SCI_WH_M1 0x5a09

Bit(s)	R/W	Default	Description
28-16	R/W	0x0	OSD scaler input width minus 1
12-0	R/W	0x0	OSD scaler input height minus 1

Amlogic Proprietary and Confidential
Copyright © Amlogic. All rights reserved.

Table 10-1619 VPP_OSD_SCO_H_START_END 0x5a0a

Bit(s)	R/W	Default	Description
27-16	R/W	0x0	OSD scaler output horizontal start
11-0	R/W	0x0	OSD scaler output horizontal end

Table 10-1620 VPP_OSD_SCO_V_START_END 0x5a0b

Bit(s)	R/W	Default	Description
27-16	R/W	0x0	OSD scaler output vertical start
11-0	R/W	0x0	OSD scaler output vertical end

Table 10-1621 VPP_OSD_SCALE_COEF_IDX 0x5a0c

Bit(s)	R/W	Default	Description

15	R/W	0x0	Because there are many coefficients used in the vertical filter and horizontal filters,
			//indirect access the coefficients of vertical filter and horizontal filter is used.
			//For vertical filter, there are 33x4 coefficients
			//For horizontal filter, there are 33x4 coefficients
			//Bit 15 index increment, if bit9 == 1 then (0: index increase 1, 1: index increase 2) else (index increase 2)

14	R/W	0x0	1: read coef through cbus enable, just for debug purpose in case when we wanna check the coef in ram in correct or not
9	R/W	0x0	if true, use 9bit resolution coef, other use 8bit resolution coef
8	R/W	0x0	type of index, 0: vertical coef, 1: horizontal coef
6-0	R/W	0x0	coef index

Table 10-1622 VPP_OSD_SCALE_COEF 0x5a0d

Bit(s)	R/W	Default	Description
31-0	R/W	0x0	

Table 10-1623 OSD_DB_FLT_CTRL 0x5a20

Bit(s)	R/W	Default	Description
26	R/W	1	reg_nrdeband_reset1 : // unsigned , default = 0 0 : no reset seed 1: reload chroma seed
25	R/W	1	reg_nrdeband_reset0 : // unsigned , default = 0 0 : no reset seed 1: reload luma seed
24	R/W	0	reg_nrdeband_rgb : // unsigned , default = 0 0 : yuv 1: RGB
23	R/W	0	reg_nrdeband_en11 : // unsigned , default = 1 debanding registers of side lines, [0] for luma, same for below
22	R/W	0	reg_nrdeband_en10 : // unsigned , default = 1 debanding registers of side lines, [1] for chroma, same for below
21	R/W	1	reg_nrdeband_siderand : // unsigned , default = 1 options to use side two lines use the rand, instead of use for the YUV three component of middle line, 0: seed

Amlogic Proprietary and Confidential
Copyright © Amlogic. All rights reserved.

Bit(s)	R/W	Default	Description
			[3]/bandrand[3] for middle line yuv; 1: seed[3]/bandrand[3] for nearby three lines Y;
20	R/W	0	reg_nrdeband_randmode : // unsigned , default = 0 mode of rand noise adding, 0: same noise strength for all difs; else: strenght of noise will not exceed the difs, MIN((pPKReg->reg_nrdeband_bandrand[m]), noise[m])
19:17	R/W	6	reg_nrdeband_bandrand2 : // unsigned , default = 6
15:13	R/W	6	reg_nrdeband_bandrand1 : // unsigned , default = 6
11: 9	R/W	6	reg_nrdeband_bandrand0 : // unsigned , default = 6
7	R/W	1	reg_nrdeband_hpxor1 : // unsigned , default = 1 debanding random hp portion xor, [0] for luma
6	R/W	1	reg_nrdeband_hpxor0 : // unsigned , default = 1 debanding random hp portion xor, [1] for chroma
5	R/W	0	reg_nrdeband_en1 : // unsigned , default = 1 debanding registers, for luma
4	R/W	0	reg_nrdeband_en0 : // unsigned , default = 1 debanding registers, for chroma
3: 2	R/W	2	reg_nrdeband_lpf_mode1 : // unsigned , default = 2 lpf mode, 0: 3x3, 1:3x5; 2: 5x5; 3:5x7
1: 0	R/W	2	reg_nrdeband_lpf_mode0 : // unsigned , default = 2 lpf mode, 0: 3x3, 1:3x5; 2: 5x5; 3:5x7

Table 10-1624 OSD_DB_FLT_CTRL1 0x5a21

Bit(s)	R/W	Default	Description
31:18			reserved
17:16	R/W	2	Reg_osddeband_noise_rs
15:12	R/W	8	Reg_osddeband_randgain
11			reserved
10:8	R/W	6	Reg_osddedband_bandrand5
7			reserved
6: 4	R/W	6	Reg_osddedband_bandrand4
3			reserved
2: 0	R/W	6	Reg_osddeband_bandrand3

Table 10-1625 OSD_DB_FLT_LUMA_THRD 0x5a22

Bit(s)	R/W	Default	Description
31:30			
29:24	R/W	36	reg_nrdeband_luma_th3 : // unsigned , default = 7 elseif <th[1] use (lpf*3 + y)/4
23:22			
21:16	R/W	28	reg_nrdeband_luma_th2 : // unsigned , default = 5 elseif <th[1] use (lpf*3 + y)/ 4elseif elseif <th[3] (lpf*1 + 3*y)/4; else
15:14			

Amlogic Proprietary and Confidential
Copyright © Amlogic. All rights reserved.

Bit(s)	R/W	Default	Description
13: 8	R/W	24	reg_nrdeband_luma_th1 : // unsigned , default = 7 elseif <th[1] use (lpf*3 + y)/4
7: 6			
5: 0	R/W	20	reg_nrdeband_luma_th0 : // unsigned , default = 5 elseif <th[1] use (lpf*3 + y)/ 4elseif elseif

Table 10-1626 OSD_DB_FLT_LUMA_THRD 0x5a23

Bit(s)	R/W	Default	Description
31:30			
29:24	R/W	36	reg_nrdeband_chrm_th3 : // unsigned , default = 7 elseif <th[1] use (lpf*3 + y)/4
23:22			
21:16	R/W	28	reg_nrdeband_chrm_th2 : // unsigned , default = 5 elseif <th[1] use (lpf*3 + y)/ 4elseif elseif <th[3] (lpf*1 + 3*y)/4; else
15:14			
13: 8	R/W	24	reg_nrdeband_chrm_th1 : // unsigned , default = 7 elseif <th[1] use (lpf*3 + y)/4
7: 6			
5: 0	R/W	20	reg_nrdeband_chrm_th0 : // unsigned , default = 5 elseif <th[1] use (lpf*3 + y)/ 4elseif elseif

Table 10-1627 OSD_DB_FLT_RANDLUT 0x5a24

Bit(s)	R/W	Default	Description
23:21	R/W	1	reg_nrdeband_randslut7 : // unsigned , default = 1 lut0
20:18	R/W	1	reg_nrdeband_randslut6 : // unsigned , default = 1 lut0
17:15	R/W	1	reg_nrdeband_randslut5 : // unsigned , default = 1 lut0
14:12	R/W	1	reg_nrdeband_randslut4 : // unsigned , default = 1 lut0
11: 9	R/W	1	reg_nrdeband_randslut3 : // unsigned , default = 1 lut0
8: 6	R/W	1	reg_nrdeband_randslut2 : // unsigned , default = 1 lut0
5: 3	R/W	1	reg_nrdeband_randslut1 : // unsigned , default = 1 lut0
2: 0	R/W	1	reg_nrdeband_randslut0 : // unsigned , default = 1 lut0

Table 10-1628 OSD_DB_FLT_PXI_THRD 0x5a25

Bit(s)	R/W	Default	Description
25:16	R/W	0	reg_nrdeband_yc_th1 : // unsigned , default = 0 to luma/|u/v| for using the denoise
9: 0	R/W	0	reg_nrdeband_yc_th0 : // unsigned , default = 0 to luma/|u/v| for using the denoise

Amlogic Proprietary and Confidential
Copyright © Amlogic. All rights reserved.

Table 10-1629 OSD_DB_FLT_SEED_Y 0x35a26

Bit(s)	R/W	Default	Description
31: 0	R/W	162143-8240	reg_nrdeband_seed0 : // unsigned , default = 1621438240 noise adding seed for Y. seed[0]= 0x60a52f20; as default

Table 10-1630 OSD_DB_FLT_SEED_U 0x5a27

Bit(s)	R/W	Default	Description
31: 0	R/W	162143-8247	reg_nrdeband_seed1 : // unsigned , default = 1621438247 noise adding seed for U. seed[0]= 0x60a52f27; as default

Table 10-1631 OSD_DB_FLT_SEED_V 0x5a28

Bit(s)	R/W	Default	Description
31: 0	R/W	162143-8242	reg_nrdeband_seed2 : // unsigned , default = 1621438242 noise adding seed for V. seed[0]= 0x60a52f22; as default

Table 10-1632 OSD_DB_FLT_SEED3 0x5a29

Bit(s)	R/W	Default	Description
31: 0	R/W	162143-8242	reg_nrdeband_seed3 : // unsigned , default = 1621438242 noise adding seed for V. seed[0]= 0x60a52f22; as default

Table 10-1633 OSD_DB_FLT_SEED4 0x5a2a

Bit(s)	R/W	Default	Description
31: 0	R/W	162143-8242	reg_nrdeband_seed4 : // unsigned , default = 1621438242 noise adding seed for V. seed[0]= 0x60a52f22; as default

Table 10-1634 OSD_DB_FLT_SEED5 0x35a2b

Bit(s)	R/W	Default	Description
31: 0	R/W	162143-8242	reg_nrdeband_seed5 : // unsigned , default = 1621438242 noise adding seed for V. seed[0]= 0x60a52f22; as default

10.2.3.23 VPP OSD2 SCALER Registers

Table 10-1635 OSD2_VSC_PHASE_STEP 0x5a40

Bit(s)	R/W	Default	Description
27-0	R/W	0x0100-0000	4.24 format

Amlogic Proprietary and Confidential
Copyright © Amlogic. All rights reserved.

Table 10-1636 OSD2_VSC_INI_PHASE 0x5a41

Bit(s)	R/W	Default	Description
31-16	R/W	0x0	bottom vertical scaler initial phase
15-0	R/W	0x0	top vertical scaler initial phase

Table 10-1637 OSD2_VSC_CTRL0 0x5a42

Bit(s)	R/W	Default	Description
25	R/W	0	Repeat last line en : 1:enable repeat last line 0:disable repeat last line
24	R/W	0x0	osd vertical Scaler enable
23	R/W	0x0	osd_prog_interlace 0: current field is progressive, 1: current field is interlace
22-21	R/W	0x0	osd_vsc_double_line_mode, bit1, double input width and half input height, bit0, change line buffer becomes 2 lines
20	R/W	0x0	osd_vsc_phase0_always_en
19	R/W	0x0	osd_vsc_nearest_en
17-16	R/W	0x0	osd_vsc_bot_rpt_l0_num
14-11	R/W	0x0	osd_vsc_bot_ini_rcv_num
9-8	R/W	0x0	osd_vsc_top_rpt_l0_num
6-3	R/W	0x0	osd_vsc_top_ini_rcv_num
2-0	R/W	0x0	osd_vsc_bank_length

Table 10-1638 OSD2_HSC_PHASE_STEP 0x5a43

Bit(s)	R/W	Default	Description
27-0	R/W	0x0100-0000	4.24 format

Table 10-1639 OSD2_HSC_INI_PHASE 0x5a44

Bit(s)	R/W	Default	Description
31-16	R/W	0x0	horizontal scaler initial phase1
15-0	R/W	0x0	horizontal scaler initial phase0

Table 10-1640 OSD2_HSC_CTRL0 0x5a45

Bit(s)	R/W	Default	Description
22	R/W	0x0	osd horizontal Scaler enable
21	R/W	0x0	osd_hsc_double_pix_mode
20	R/W	0x0	osd_hsc_phase0_always_en
19	R/W	0x0	osd_vsc_nearest_en
17-16	R/W	0x0	osd_hsc_rpt_p0_num1

Amlogic Proprietary and Confidential
Copyright © Amlogic. All rights reserved.

Bit(s)	R/W	Default	Description
14-11	R/W	0x0	osd_hsc_ini_rcv_num1
9-8	R/W	0x0	osd_hsc_rpt_p0_num0
6-3	R/W	0x0	osd_hsc_ini_rcv_num0
2-0	R/W	0x0	osd_hsc_bank_length

Table 10-1641 OSD2_HSC_INI_PAT_CTRL 0x5a46

Bit(s)	R/W	Default	Description
15-8	R/W	0x0	for 3D quincunx sub-sampling. pattern, each patten 1 bit, from lsb -> msb
6-4	R/W	0x0	pattern start
2-0	R/W	0x0	pattern end

Table 10-1642 OSD2_SC_DUMMY_DATA 0x5a47

Bit(s)	R/W	Default	Description
31-24	R/W	0x0	componet 0 ,data = (dst_data >> 4) ,so 8 bit in 12bit mode, 6bit in 10bit mode
23-16	R/W	0x0	component 1 ,data = (dst_data >> 4) ,so 8 bit in 12bit mode, 6bit in 10bit mode
15-8	R/W	0x0	component 2 ,data = (dst_data >> 4) ,so 8 bit in 12bit mode, 6bit in 10bit mode
7-0	R/W	0x0	component 3 , alpha

Table 10-1643 OSD2_SC_CTRL0 0x5a48

Bit(s)	R/W	Default	Description
27:16	R/W	0	osd_sc_gclk_ctrl : //unsigned,default = 0,osd_sc_gclk_ctrl
13	R/W	0	osd_sc_din_osd_alpha_mode : //unsigned,default = 0,osc_sc_din_osd2_alpha_mode, 1: (alpha >= 128) ? alpha -1: alpha, 0: (alpha >=1) ? alpha - 1: alpha.
12	R/W	0	osd_sc_dout_alpha_mode : //unsigned,default = 0,osc_sc_alpha_mode, 1: (alpha >= 128) ? alpha + 1: alpha, 0: (alpha >=1) ? alpha + 1: alpha.
11:4	R/W	0	osd_sc_alpha : //unsigned,default = 0,default alpha for vd1 or vd2 if they are selected as the source
3	R/W	0	osd_sc_path_en : //unsigned,default = 0,osd scaler path enable
2	R/W	0	osd_sc_en : //unsigned,default = 0,osd scaler enable

Table 10-1644 OSD2_SCI_WH_M1 0x5a49

Bit(s)	R/W	Default	Description
28-16	R/W	0x0	OSD scaler input width minus 1
12-0	R/W	0x0	OSD scaler input height minus 1

Amlogic Proprietary and Confidential
Copyright © Amlogic. All rights reserved.

Table 10-1645 OSD2_SCO_H_START_END 0x5a4a

Bit(s)	R/W	Default	Description
27-16	R/W	0x0	OSD scaler output horizontal start
11-0	R/W	0x0	OSD scaler output horizontal end

Table 10-1646 OSD2_SCO_V_START_END 0x5a4b

Bit(s)	R/W	Default	Description
27-16	R/W	0x0	OSD scaler output vertical start
11-0	R/W	0x0	OSD scaler output vertical end

Table 10-1647 OSD2_SCALE_COEF_IDX 0x5a4c

Bit(s)	R/W	Default	Description

15	R/W	0x0	Because there are many coefficients used in the vertical filter and horizontal filters,
			//indirect access the coefficients of vertical filter and horizontal filter is used.
			//For vertical filter, there are 33x4 coefficients
			//For horizontal filter, there are 33x4 coefficients
			//Bit 15 index increment, if bit9 == 1 then (0: index increase 1, 1: index increase 2) else (index increase 2)

14	R/W	0x0	1: read coef through cbus enable, just for debug purpose in case when we wanna check the coef in ram in correct or not
9	R/W	0x0	if true, use 9bit resolution coef, other use 8bit resolution coef
8	R/W	0x0	type of index, 0: vertical coef, 1: horizontal coef
6-0	R/W	0x0	coef index

Table 10-1648 OSD2_SCALE_COEF 0x5a4d

Bit(s)	R/W	Default	Description
31-0	R/W	0x0	

10.2.3.24 VPP OSD3 Scaler Registers

Table 10-1649 OSD34_VSC_PHASE_STEP 0x5a80

Bit(s)	R/W	Default	Description
27-0	R/W	0x0100-0000	4.24 format

Table 10-1650 OSD34_VSC_INI_PHASE 0x5a81

Bit(s)	R/W	Default	Description
31-16	R/W	0x0	bottom vertical scaler initial phase
15-0	R/W	0x0	top vertical scaler initial phase

Amlogic Proprietary and Confidential
Copyright © Amlogic. All rights reserved.

Table 10-1651 OSD34_VSC_CTRL0 0x5a82

Bit(s)	R/W	Default	Description
25	R/W	0	Repeat last line en : 1:enable repeat last line 0:disable repeat last line
24	R/W	0x0	osd vertical Scaler enable
23	R/W	0x0	osd_prog_interlace 0: current field is progressive, 1: current field is interlace
22-21	R/W	0x0	osd_vsc_double_line_mode, bit1, double input width and half input height, bit0, change line buffer becomes 2 lines
20	R/W	0x0	osd_vsc_phase0_always_en
19	R/W	0x0	osd_vsc_nearest_en
17-16	R/W	0x0	osd_vsc_bot_rpt_l0_num
14-11	R/W	0x0	osd_vsc_bot_ini_rcv_num
9-8	R/W	0x0	osd_vsc_top_rpt_l0_num
6-3	R/W	0x0	osd_vsc_top_ini_rcv_num
2-0	R/W	0x0	osd_vsc_bank_length

Table 10-1652 OSD34_HSC_PHASE_STEP 0x5a83

Bit(s)	R/W	Default	Description
27-0	R/W	0x0100-0000	4.24 format

Table 10-1653 OSD34_HSC_INI_PHASE 0x5a84

Bit(s)	R/W	Default	Description
31-16	R/W	0x0	horizontal scaler initial phase1
15-0	R/W	0x0	horizontal scaler initial phase0

Table 10-1654 OSD34_HSC_CTRL0 0x5a85

Bit(s)	R/W	Default	Description
22	R/W	0x0	osd horizontal Scaler enable
21	R/W	0x0	osd_hsc_double_pix_mode
20	R/W	0x0	osd_hsc_phase0_always_en
19	R/W	0x0	osd_vsc_nearest_en
17-16	R/W	0x0	osd_hsc_rpt_p0_num1
14-11	R/W	0x0	osd_hsc_ini_rcv_num1
9-8	R/W	0x0	osd_hsc_rpt_p0_num0
6-3	R/W	0x0	osd_hsc_ini_rcv_num0
2-0	R/W	0x0	osd_hsc_bank_length

Amlogic Proprietary and Confidential
Copyright © Amlogic. All rights reserved.

Table 10-1655 OSD34_HSC_INI_PAT_CTRL 0x5a86

Bit(s)	R/W	Default	Description
15-8	R/W	0x0	for 3D quincunx sub-sampling. pattern, each patten 1 bit, from lsb -> msb
6-4	R/W	0x0	pattern start
2-0	R/W	0x0	pattern end

Table 10-1656 OSD34_SC_DUMMY_DATA 0x5a87

Bit(s)	R/W	Default	Description
31-24	R/W	0x0	componet 0 ,data = (dst_data >> 4) ,so 8 bit in 12bit mode, 6bit in 10bit mode
23-16	R/W	0x0	component 1 ,data = (dst_data >> 4) ,so 8 bit in 12bit mode, 6bit in 10bit mode
15-8	R/W	0x0	component 2 ,data = (dst_data >> 4) ,so 8 bit in 12bit mode, 6bit in 10bit mode
7-0	R/W	0x0	component 3 , alpha

Table 10-1657 OSD34_SC_CTRL0 0x5a88

Bit(s)	R/W	Default	Description
27:16	R/W	0	osd_sc_gclk_ctrl : //unsigned,default = 0,osd_sc_gclk_ctrl
13	R/W	0	osd_sc_din_osd_alpha_mode : //unsigned,default = 0,osc_sc_din_osd2_alpha_mode, 1: (alpha >= 128) ? alpha -1: alpha, 0: (alpha >=1) ? alpha - 1: alpha.
12	R/W	0	osd_sc_dout_alpha_mode : //unsigned,default = 0,osc_sc_alpha_mode, 1: (alpha >= 128) ? alpha + 1: alpha, 0: (alpha >=1) ? alpha + 1: alpha.
11:4	R/W	0	osd_sc_alpha : //unsigned,default = 0,default alpha for vd1 or vd2 if they are selected as the source
3	R/W	0	osd_sc_path_en : //unsigned,default = 0,osd scaler path enable
2	R/W	0	osd_sc_en : //unsigned,default = 0,osd scaler enable

Table 10-1658 OSD34_SCI_WH_M1 0x5a89

Bit(s)	R/W	Default	Description
28-16	R/W	0x0	OSD scaler input width minus 1
12-0	R/W	0x0	OSD scaler input height minus 1

Table 10-1659 OSD34_SCO_H_START_END 0x5a8a

Bit(s)	R/W	Default	Description
27-16	R/W	0x0	OSD scaler output horizontal start
11-0	R/W	0x0	OSD scaler output horizontal end

Amlogic Proprietary and Confidential
Copyright © Amlogic. All rights reserved.

Table 10-1660 OSD34_SCO_V_START_END 0x5a8b

Bit(s)	R/W	Default	Description
27-16	R/W	0x0	OSD scaler output vertical start
11-0	R/W	0x0	OSD scaler output vertical end

Table 10-1661 OSD34_SCALE_COEF_IDX 0x5a8c

Bit(s)	R/W	Default	Description

15	R/W	0x0	Because there are many coefficients used in the vertical filter and horizontal filters,
			//indirect access the coefficients of vertical filter and horizontal filter is used.
			//For vertical filter, there are 33x4 coefficients
			//For horizontal filter, there are 33x4 coefficients
			//Bit 15 index increment, if bit9 == 1 then (0: index increase 1, 1: index increase 2) else (index increase 2)

14	R/W	0x0	1: read coef through cbus enable, just for debug purpose in case when we wanna check the coef in ram in correct or not
9	R/W	0x0	if true, use 9bit resolution coef, other use 8bit resolution coef
8	R/W	0x0	type of index, 0: vertical coef, 1: horizontal coef
6-0	R/W	0x0	coef index

Table 10-1662 OSD34_SCALE_COEF 0x5a8d

Bit(s)	R/W	Default	Description
31-0	R/W	0x0	

10.2.3.25 VPP OSD4 Scaler Registers

Table 10-1663 OSD4_VSC_PHASE_STEP 0x5ac0

Bit(s)	R/W	Default	Description
27-0	R/W	0x0100-0000	4.24 format

Table 10-1664 OSD4_VSC_INI_PHASE 0x5ac1

Bit(s)	R/W	Default	Description
31-16	R/W	0x0	bottom vertical scaler initial phase
15-0	R/W	0x0	top vertical scaler initial phase

Table 10-1665 OSD4_VSC_CTRL0 0x5ac2

Bit(s)	R/W	Default	Description
25	R/W	0	Repeat last line en : 1:enable repeat last line 0:disable repeat last line
24	R/W	0x0	osd vertical Scaler enable

Amlogic Proprietary and Confidential
Copyright © Amlogic. All rights reserved.

Bit(s)	R/W	Default	Description
23	R/W	0x0	osd_prog_interlace 0: current field is progressive, 1: current field is interlace
22-21	R/W	0x0	osd_vsc_double_line_mode, bit1, double input width and half input height, bit0, change line buffer becomes 2 lines
20	R/W	0x0	osd_vsc_phase0_always_en
19	R/W	0x0	osd_vsc_nearest_en
17-16	R/W	0x0	osd_vsc_bot_rpt_l0_num
14-11	R/W	0x0	osd_vsc_bot_ini_rcv_num
9-8	R/W	0x0	osd_vsc_top_rpt_l0_num
6-3	R/W	0x0	osd_vsc_top_ini_rcv_num
2-0	R/W	0x0	osd_vsc_bank_length

Table 10-1666 OSD4_HSC_PHASE_STEP 0x5ac3

Bit(s)	R/W	Default	Description
27-0	R/W	0x0100-0000	4.24 format

Table 10-1667 OSD4_HSC_INI_PHASE 0x5ac4

Bit(s)	R/W	Default	Description
31-16	R/W	0x0	horizontal scaler initial phase1
15-0	R/W	0x0	horizontal scaler initial phase0

Table 10-1668 OSD4_HSC_CTRL0 0x5ac5

Bit(s)	R/W	Default	Description
22	R/W	0x0	osd horizontal Scaler enable
21	R/W	0x0	osd_hsc_double_pix_mode
20	R/W	0x0	osd_hsc_phase0_always_en
19	R/W	0x0	osd_vsc_nearest_en
17-16	R/W	0x0	osd_hsc_rpt_p0_num1
14-11	R/W	0x0	osd_hsc_ini_rcv_num1
9-8	R/W	0x0	osd_hsc_rpt_p0_num0
6-3	R/W	0x0	osd_hsc_ini_rcv_num0
2-0	R/W	0x0	osd_hsc_bank_length

Amlogic Proprietary and Confidential
Copyright © Amlogic. All rights reserved.

Table 10-1669 OSD4_HSC_INI_PAT_CTRL 0x5ac6

Bit(s)	R/W	Default	Description
15-8	R/W	0x0	for 3D quincunx sub-sampling. pattern, each pattern 1 bit, from lsb -> msb
6-4	R/W	0x0	pattern start
2-0	R/W	0x0	pattern end

Table 10-1670 OSD4_SC_DUMMY_DATA 0x5ac7

Bit(s)	R/W	Default	Description
31-24	R/W	0x0	componet 0 ,data = (dst_data >> 4) ,so 8 bit in 12bit mode, 6bit in 10bit mode
23-16	R/W	0x0	component 1 ,data = (dst_data >> 4) ,so 8 bit in 12bit mode, 6bit in 10bit mode
15-8	R/W	0x0	component 2 ,data = (dst_data >> 4) ,so 8 bit in 12bit mode, 6bit in 10bit mode
7-0	R/W	0x0	component 3 , alpha

Table 10-1671 OSD4_SC_CTRL0 0x5ac8

Bit(s)	R/W	Default	Description
27:16	R/W	0	osd_sc_gclk_ctrl : //unsigned,default = 0,osd_sc_gclk_ctrl
13	R/W	0	osd_sc_din_osd_alpha_mode : //unsigned,default = 0,osc_sc_din_osd2_alpha_mode, 1: (alpha >= 128) ? alpha -1: alpha, 0: (alpha >=1) ? alpha - 1: alpha.
12	R/W	0	osd_sc_dout_alpha_mode : //unsigned,default = 0,osc_sc_alpha_mode, 1: (alpha >= 128) ? alpha + 1: alpha, 0: (alpha >=1) ? alpha + 1: alpha.
11:4	R/W	0	osd_sc_alpha : //unsigned,default = 0,default alpha for vd1 or vd2 if they are selected as the source
3	R/W	0	osd_sc_path_en : //unsigned,default = 0,osd scaler path enable
2	R/W	0	osd_sc_en : //unsigned,default = 0,osd scaler enable

Table 10-1672 OSD4_SCI_WH_M1 0x5ac9

Bit(s)	R/W	Default	Description
28-16	R/W	0x0	OSD scaler input width minus 1
12-0	R/W	0x0	OSD scaler input height minus 1

Table 10-1673 OSD4_SCO_H_START_END 0x5aca

Bit(s)	R/W	Default	Description
27-16	R/W	0x0	OSD scaler output horizontal start
11-0	R/W	0x0	OSD scaler output horizontal end

Amlogic Proprietary and Confidential
Copyright © Amlogic. All rights reserved.

Table 10-1674 OSD4_SCO_V_START_END 0x5acb

Bit(s)	R/W	Default	Description
27-16	R/W	0x0	OSD scaler output vertical start
11-0	R/W	0x0	OSD scaler output vertical end

Table 10-1675 OSD4_SCALE_COEF_IDX 0x5acc

Bit(s)	R/W	Default	Description

15	R/W	0x0	Because there are many coefficients used in the vertical filter and horizontal filters,
			//indirect access the coefficients of vertical filter and horizontal filter is used.
			//For vertical filter, there are 33x4 coefficients
			//For horizontal filter, there are 33x4 coefficients
			//Bit 15 index increment, if bit9 == 1 then (0: index increase 1, 1: index increase 2) else (index increase 2)

14	R/W	0x0	1: read coef through cbus enable, just for debug purpose in case when we wanna check the coef in ram in correct or not
9	R/W	0x0	if true, use 9bit resolution coef, other use 8bit resolution coef
8	R/W	0x0	type of index, 0: vertical coef, 1: horizontal coef
6-0	R/W	0x0	coef index

Table 10-1676 OSD4_SCALE_COEF 0x5acd

Bit(s)	R/W	Default	Description
31-0	R/W	0x0	

10.2.3.26 VPP VD1 SCALER Registers

Because there are many coefficients used in the vertical filter and horizontal filters, indirect access the coefficients of vertical filter and horizontal filter is used. For vertical filter, there are 33x4 coefficients For horizontal filter, there are 33x4 coefficients.

Table 10-1677 VPP_SCALE_COEF_IDX 0x1d03

Bit(s)	R/W	Default	Description
15	R/W	0	index_inc : // unsigned , default = 0x0 ,index increment, if bit9 == 1 then (0: index increase 1, 1: index increase 2) else (index increase 2)
14	R/W	0	rd_cbus_coef_en : // unsigned , default = 0x0 ,1: read coef through cbus enable, just for debug purpose in case when we wanna check the coef in ram in correct or not
13	R/W	0	vf_sep_coef_en : // unsigned , default = 0x0 ,if true, vertical separated coef enable
9	R/W	0	high_reso_en : // unsigned , default = 0x0 ,if true, use 9bit resolution coef, other use 8bit resolution coef
8:7	R/W	0	type_index : // unsigned , default = 0x0 ,type of index, 00: vertical coef, 01: vertical chroma coef: 10: horizontal coef, 11: resevered
6:0	R/W	0	coef_index : // unsigned , default = 0x0 ,coef index

Amlogic Proprietary and Confidential
Copyright © Amlogic. All rights reserved.

Table 10-1678 VPP_SCALE_COEF 0x1d04

Bit(s)	R/W	Default	Description
31:24	R/W	0	coef0 : //signed , default = 0x0 , coefficients for vertical filter and horizontal filter
23:16	R/W	0	coef1 : //signed , default = 0x0 , coefficients for vertical filter and horizontal filter
15:8	R/W	0	coef2 : //signed , default = 0x0 , coefficients for vertical filter and horizontal filter
7 :0	R/W	0	coef3 : //signed , default = 0x0 , coefficients for vertical filter and horizontal filter

Table 10-1679 VPP_VSC_REGION12_STARTP 0x1d05

Bit(s)	R/W	Default	Description
28:16	R/W	0	region1_startp : //unsigned , default = 0 ,region1 startp
12:0	R/W	0	region2_startp : //unsigned , default = 0 ,region2 startp

Table 10-1680 VPP_VSC_REGION34_STARTP 0x1d06

Bit(s)	R/W		Default	Description
28:16		R/W	0	region3_startp
12:0		R/W	0	region4_startp

Table 10-1681 VPP_VSC_REGION4_ENDP 0x1d07

Bit(s)	R/W	Default	Description
12:0	R/W	13	region4_endp : //unsigned , default = 13'd1079 ,region4 endp

Table 10-1682 VPP_VSC_START_PHASE_STEP 0x1d08

Bit(s)	R/W	Default	Description
27:24	R/W	1	integer_part : //unsigned , default = 1,vertical start phase step, (source/dest)* (2^24),integer part of step
23:0	R/W	0	fraction_part : //unsigned , default = 0,vertical start phase step, (source/dest)* (2^24),fraction part of step

Table 10-1683 VPP_VSC_REGION0_PHASE_SLOPE 0x1d09

Bit(s)	R/W	Default	Description
24:0	R/W	0	region0_phase_slope : //signed , default = 0,vertical scaler region0 phase slope, region0 phase slope

Table 10-1684 VPP_VSC_REGION1_PHASE_SLOPE 0x1d0a

Bit(s)	R/W	Default	Description
24:0	R/W	0	region1_phase_slope : //signed , default = 0,region1 phase slope

Amlogic Proprietary and Confidential
Copyright © Amlogic. All rights reserved.

Table 10-1685 VPP_VSC_REGION3_PHASE_SLOPE 0x1d0b

Bit(s)	R/W	Default	Description
24:0	R/W	0	region3_phase_slope : //signed , default = 0,region3 phase slope

Table 10-1686 VPP_VSC_REGION4_PHASE_SLOPE 0x1d0c

Bit(s)	R/W	Default	Description
24:0	R/W	0	region4_phase_slope : //signed , default = 0,region4 phase slope

Table 10-1687 VPP_VSC_PHASE_CTRL 0x1d0d

Bit(s)	R/W	Default	Description
18:17	R/W	0	vsc_double_line_mode : //unsigned , default = 0, double line mode, input/output line width of vscaler becomes 2X, so only 2 line buffer in this case, use for 3D line by line interleave scaling bit1 true, double the input width and half input height, bit0 true, change line buffer 2 lines instead of 4 lines
16	R.O	0	prog_interlace : //unsigned , default = 0,0: progressive output, 1: interlace output
15	R/W	0	vsc_bot_l0_out_en : //unsigned , default = 0,vertical scaler output line0 in advance or not for bottom field
14:13	R/W	1	vsc_bot_rpt_l0_num : //unsigned , default = 1,vertical scaler initial repeat line0 number for bottom field
11:8	R/W	4	vsc_bot_ini_rcv_num : //unsigned , default = 4,vertical scaler initial receiving number for bottom field
7	R/W	0	vsc_top_l0_out_en : //unsigned , default = 0,vertical scaler output line0 in advance or not for top field
6:5	R/W	1	vsc_top_rpt_l0_num : //unsigned , default = 1,vertical scaler initial repeat line0 number for top field
3:0	R/W	4	vsc_top_ini_rcv_num : //unsigned , default = 4,vertical scaler initial receiving number for top field

Table 10-1688 VPP_VSC_INI_PHASE 0x1d0e

Bit(s)	R/W	Default	Description
31:16	R/W	0,	//unsigned , default = 0,vertical scaler field initial phase for bottom field Bit 15:0 //unsigned , default = 0,vertical scaler field initial phase for top field

Table 10-1689 VPP_HSC_REGION12_STARTP 0x1d10

Bit(s)	R/W	Default	Description
28:16	R/W	0	region1_startp : //unsigned , default = 0,region1 startp
12:0	R/W	0	region2_startp : //unsigned , default = 0,region2 startp

Amlogic Proprietary and Confidential
Copyright © Amlogic. All rights reserved.

Table 10-1690 VPP_HSC_REGION34_STARTP 0x1d11

Bit(s)	R/W	Default	Description
28:16	R/W	0	region3 : startp //unsigned , default = 0x780,region3 startp
12:0	R/W	0	region4 : startp //unsigned , default = 0x780,region4 startp

Table 10-1691 VPP_HSC_REGION4_ENDP 0x1d12

Bit(s)	R/W	Default	Description
12:0	R/W	13	region4 : startp //unsigned , default = 13'd1919,region4 startp

Table 10-1692 horizontal start phase step, (source/dest)*(2^24) VPP_HSC_START_PHASE_ STEP 0x1d13

Bit(s)	R/W	Default		Description
27:24	R/W	1	integer_part : //unsigned , default = 1,integer part of step	
23:0	R/W	0	fraction_part : //unsigned , default = 0,fraction part of step	

Table 10-1693 VPP_HSC_REGION0_PHASE_SLOPE 0x1d14

Bit(s)	R/W	Default	Description
24:0	R/W	0	region0_phase_slope : //signed , default = 0,region0 phase slope

Table 10-1694 VPP_HSC_REGION1_PHASE_SLOPE 0x1d15

Bit(s)	R/W	Default	Description
24:0	R/W	0	region0_phase_slope : //signed , default = 0,region1 phase slope

Table 10-1695 VPP_HSC_REGION3_PHASE_SLOPE 0x1d16

Bit(s)	R/W	Default	Description
24:0	R/W	0	region0_phase_slope : //signed , default = 0,region3 phase slope

Table 10-1696 VPP_HSC_REGION4_PHASE_SLOPE 0x1d17

Bit(s)	R/W	Default	Description
24:0	R/W	0	region0_phase_slope : //signed , default = 0,region4 phase slope

Amlogic Proprietary and Confidential
Copyright © Amlogic. All rights reserved.

Table 10-1697 VPP_HSC_PHASE_CTRL 0x1d18

Bit(s)	R/W	Default	Description
22:21	R/W	1	hsc_rpt_p0_num0 : //unsigned , default = 1 ,horizontal scaler initial repeat pixel0 number0
19:16	R/W	4	hsc_ini_rcv_num0 : //unsigned , default = 4 ,horizontal scaler initial receiving number0
15:0	R/W	0	hsc_ini_phase0 : //unsigned , default = 0 ,horizontal scaler top field initial phase0

Table 10-1698 VPP_SC_MISC 0x1d19

Bit(s)	R/W	Default	Description
24	R/W	0	Repeat last line en : 1:enable repeat last line 0:disable repeat last line
22	R/W	0	hsc_len_div2_en : //unsigned , default = 0 ,if true, divide VSC line length 2 as the HSC input length, othwise VSC length length is the same as the VSC line length just for special usage, more flexibilityi
21	R/W	0	lbuf_mode : //unsigned , default = 0 ,if true, prevsc uses lin buffer, otherwise prevsc does not use line buffer, it should be same as prevsc_en
20	R/W	0	prehsc_en : //unsigned , default = 0 ,prehsc_en
19	R/W	0	prevsc_en : //unsigned , default = 0 ,prevsc_en
18	R/W	0	vsc_en : //unsigned , default = 0 ,vsc_en
17	R/W	0	hsc_en : //unsigned , default = 0 ,hsc_en
16	R/W	0	sc_top_en : //unsigned , default = 0 ,scale_top_en
15	R/W	0	sc_vd_en : //unsigned , default = 0 ,video1 scale out enable
12	R/W	1	hsc_nonlinear_4region_en : //unsigned , default = 1 ,if true, region0,region4 are nonlinear regions, otherwise they are not scaling regions, for horizontal scaler
10:8	R/W	0	hsc_bank_length : //unsigned , default = 0 ,horizontal scaler bank length
5	R/W	4	vsc_phase_field_mode : //unsigned , default = 4 ,vertical scaler phase field mode, if true, disable the opposite parity line output, more bandwith needed if output 1080i
4	R/W	0	vsc_nonlinear_4region_en : //unsigned , default = 0 ,if true, region0,region4 are nonlinear regions, otherwise they are not scaling regions, for vertical scaler
2:0	R/W	4	vsc_bank_length : //unsigned , default = 4 ,vertical scaler bank length

Table 10-1699 VPP_SCO_FIFO_CTRL 0x1d33

Bit(s)	R/W	Default	Description
27:16	R/W	0	sco_fifo_line_lenm1 : //unsigned , default = 0xfff, scale out fifo line length minus 1
12:0	R/W	0	sco_fifo_size : //unsigned , default = 0x200, scale out fifo size (actually only bit 11:1 is valid, 11:1, max 1024), always even number

For 3D quincunx sub-sampling and horizontal pixel by pixel 3D interleaving.

Amlogic Proprietary and Confidential
Copyright © Amlogic. All rights reserved.

Table 10-1700 VPP_HSC_PHASE_CTRL1 0x1d34

Bit(s)	R/W	Default	Description
27:24	R/W	0	prehsc_mode : //unsigned , default = 0,prehsc_mode, bit 3:2, prehsc odd line interp mode, bit 1:0, prehsc even line interp mode, each 2bit, 00: pix0+pix1/2, average, 01: pix1, 10: pix0
23	R/W	0	hsc_double_pix_mode : //unsigned , default = 0,horizontal scaler double pixel mode
22:21	R/W	1	hsc_rpt_p0_num1 : //unsigned , default = 1,horizontal scaler initial repeat pixel0 number1
19:16	R/W	4	hsc_ini_rcv_num1 : //unsigned , default = 4,horizontal scaler initial receiving number1
15:0	R/W	0	hsc_ini_phase1 : //unsigned , default = 0,horizontal scaler top field initial phase1

For 3D quincunx sub-sampling.

Table 10-1701 VPP_HSC_INI_PAT_CTRL 0x1d35

Bit(s)	R/W	Default	Description
31:24	R/W	0	prehsc_pattern : //unsigned , default = 0, prehsc pattern, each pattern 1 bit, from lsb -> msb
22:20	R/W	0	prehsc_pat_star : //unsigned , default = 0, prehsc pattern start
18:16	R/W	0	prehsc_pat_end : //unsigned , default = 0, prehsc pattern end
15:8	R/W	0	hsc_pattern : //unsigned , default = 0, hsc pattern, each pattern 1 bit, from lsb -> msb
6:4	R/W	0	hsc_pat_start : //unsigned , default = 0, hsc pattern start
2:0	R/W	0	hsc_pat_end : //unsigned , default = 0, hsc pattern end

Table 10-1702 VPP_SC_GCLK_CTRL 0x1d35

Bit(s)	R/W	Default	Description
15:0	R/W	0	vpp_sc_gclk_ctrl : //unsigned , default = 0 ,scale clock gate

10.2.3.27 VPP VD2 SCALER Registers

Because there are many coefficients used in the vertical filter and horizontal filters, indirect access the coefficients of vertical filter and horizontal filter is used. For vertical filter, there are 33x4 coefficients For horizontal filter, there are 33x4 coefficients.

Table 10-1703 VD2_SCALE_COEF_IDX 0x3933

Bit(s)	R/W	Default	Description
15	R/W	0	index_inc : // unsigned , default = 0x0 ,index increment, if bit9 == 1 then (0: index increase 1, 1: index increase 2) else (index increase 2)
14	R/W	0	rd_cbus_coef_en : // unsigned , default = 0x0 ,1: read coef through cbus enable, just for debug purpose in case when we wanna check the coef in ram in correct or not
13	R/W	0	vf_sep_coef_en : // unsigned , default = 0x0 ,if true, vertical separated coef enable

Amlogic Proprietary and Confidential
Copyright © Amlogic. All rights reserved.

Bit(s)	R/W	Default	Description
9	R/W	0	high_reso_en : // unsigned , default = 0x0 ,if true, use 9bit resolution coef, other use 8bit resolution coef
8:7	R/W	0	type_index : // unsigned , default = 0x0 ,type of index, 00: vertical coef, 01: vertical chroma coef: 10: horizontal coef, 11: resevered
6:0	R/W	0	coef_index : // unsigned , default = 0x0 ,coef index

Table 10-1704 VD2_SCALE_COEF 0x3934

Bit(s)	R/W	Default	Description
31:24	R/W	0	coef0 : //signed , default = 0x0 , coefficients for vertical filter and horizontal filter
23:16	R/W	0	coef1 : //signed , default = 0x0 , coefficients for vertical filter and horizontal filter
15:8	R/W	0	coef2 : //signed , default = 0x0 , coefficients for vertical filter and horizontal filter
7 :0	R/W	0	coef3 : //signed , default = 0x0 , coefficients for vertical filter and horizontal filter

Table 10-1705 VD2_VSC_REGION12_STARTP 0x3935

Bit(s)	R/W	Default	Description
28:16	R/W	0	region1_startp : //unsigned , default = 0 ,region1 startp
12:0	R/W	0	region2_startp : //unsigned , default = 0 ,region2 startp

Table 10-1706 VD2_VSC_REGION34_STARTP 0x3936

Bit(s)	R/W	Default	Description
28:16	R/W	0	region3_startp : //unsigned , default = 0x0438,region3 startp
12:0	R/W	0	region4_startp : //unsigned , default = 0x0438,region4 startp

Table 10-1707 VD2_VSC_REGION4_ENDP 0x3937

Bit(s)	R/W	Default	Description
12:0	R/W	13	region4_endp : //unsigned , default = 13'd1079 ,region4 endp

Table 10-1708 VD2_VSC_START_PHASE_STEP 0x3938

Bit(s)	R/W	Default	Description
27:24	R/W	1	integer_part : //unsigned , default = 1,vertical start phase step, (source/dest)*(2^24),integer part of step
23:0	R/W	0	fraction_part : //unsigned , default = 0,vertical start phase step, (source/dest)*(2^24),fraction part of step

Amlogic Proprietary and Confidential
Copyright © Amlogic. All rights reserved.

Table 10-1709 VD2_VSC_REGION0_PHASE_SLOPE 0x3939

Bit(s)	R/W	Default	Description
24:0	R/W	0	region0_phase_slope : //signed , default = 0,vertical scaler region0 phase slope, region0 phase slope

Table 10-1710 VD2_VSC_REGION1_PHASE_SLOPE 0x393a

Bit(s)	R/W	Default	Description
24:0	R/W	0	region1_phase_slope : //signed , default = 0,region1 phase slope

Table 10-1711 VD2_VSC_REGION3_PHASE_SLOPE 0x393b

Bit(s)	R/W	Default	Description
24:0	R/W	0	region3_phase_slope : //signed , default = 0,region3 phase slope

Table 10-1712 VD2_VSC_REGION4_PHASE_SLOPE 0x393c

Bit(s)	R/W	Default	Description
24:0	R/W	0	region4_phase_slope : //signed , default = 0,region4 phase slope

Table 10-1713 VD2_VSC_PHASE_CTRL 0x393d

Bit(s)	R/W	Default	Description
18:17	R/W	0	vsc_double_line_mode : //unsigned , default = 0, double line mode, input/output line width of vscaler becomes 2X, so only 2 line buffer in this case, use for 3D line by line interleave scaling bit1 true, double the input width and half input height, bit0 true, change line buffer 2 lines instead of 4 lines
16	R.O	0	prog_interlace : //unsigned , default = 0,0: progressive output, 1: interlace output
15	R/W	0	vsc_bot_l0_out_en : //unsigned , default = 0,vertical scaler output line0 in advance or not for bottom field
14:13	R/W	1	vsc_bot_rpt_l0_num : //unsigned , default = 1,vertical scaler initial repeat line0 number for bottom field
11:8	R/W	4	vsc_bot_ini_rcv_num : //unsigned , default = 4,vertical scaler initial receiving number for bottom field
7	R/W	0	vsc_top_l0_out_en : //unsigned , default = 0,vertical scaler output line0 in advance or not for top field
6:5	R/W	1	vsc_top_rpt_l0_num : //unsigned , default = 1,vertical scaler initial repeat line0 number for top field
3:0	R/W	4	vsc_top_ini_rcv_num : //unsigned , default = 4,vertical scaler initial receiving number for top field

Table 10-1714 VD2_VSC_INI_PHASE 0x393e

Bit(s)	R/W	Default	Description
31:16	R/W	0,	//unsigned , default = 0,vertical scaler field initial phase for bottom field Bit 15:0 //unsigned , default = 0,vertical scaler field initial phase for top field

Amlogic Proprietary and Confidential
Copyright © Amlogic. All rights reserved.

Table 10-1715 VD2_HSC_REGION12_STARTP 0x393f

Bit(s)	R/W	Default	Description
28:16	R/W	0	region1_startp : //unsigned , default = 0,region1 startp
12:0	R/W	0	region2_startp : //unsigned , default = 0,region2 startp

Table 10-1716 VD2_HSC_REGION34_STARTP 0x3940

Bit(s)	R/W	Default	Description
28:16	R/W	0	region3 : startp //unsigned , default = 0x780,region3 startp
12:0	R/W	0	region4 : startp //unsigned , default = 0x780,region4 startp

Table 10-1717 VD2_HSC_REGION4_ENDP 0x3941

Bit(s)	R/W	Default	Description
12:0	R/W	13	region4 : startp //unsigned , default = 13'd1919,region4 startp

Horizontal start phase step, (source/dest)*(2^24)

Table 10-1718 VD2_HSC_START_PHASE_STEP 0x3942

Bit(s)	R/W	Default	Description
27:24	R/W	1	integer_part : //unsigned , default = 1,integer part of step
23:0	R/W	0	fraction_part : //unsigned , default = 0,fraction part of step

Table 10-1719 VD2_HSC_REGION0_PHASE_SLOPE 0x3943

Bit(s)	R/W	Default	Description
24:0	R/W	0	region0_phase_slope : //signed , default = 0,region0 phase slope

Table 10-1720 VD2_HSC_REGION1_PHASE_SLOPE 0x3944

Bit(s)	R/W	Default	Description
24:0	R/W	0	region0_phase_slope : //signed , default = 0,region1 phase slope

Table 10-1721 VD2_HSC_REGION3_PHASE_SLOPE 0x3945

Bit(s)	R/W	Default	Description
24:0	R/W	0	region0_phase_slope : //signed , default = 0,region3 phase slope

Amlogic Proprietary and Confidential
Copyright © Amlogic. All rights reserved.

Table 10-1722 VD2_HSC_REGION4_PHASE_SLOPE 0x3946

Bit(s)	R/W	Default	Description
24:0	R/W	0	region0_phase_slope : //signed , default = 0,region4 phase slope

Table 10-1723 VD2_HSC_PHASE_CTRL 0x3947

Bit(s)	R/W	Default	Description
22:21	R/W	1	hsc_rpt_p0_num0 : //unsigned , default = 1 ,horizontal scaler initial repeat pixel0 number0
19:16	R/W	4	hsc_ini_rcv_num0 : //unsigned , default = 4 ,horizontal scaler initial receiving number0
15:0	R/W	0	hsc_ini_phase0 : //unsigned , default = 0 ,horizontal scaler top field initial phase0

Table 10-1724 VD2_SC_MISC 0x3948

Bit(s)	R/W	Default	Description
24	R/W	0	Repeat last line en : 1:enable repeat last line 0:disable repeat last line
22	R/W	0	hsc_len_div2_en : //unsigned , default = 0 ,if true, divide VSC line length 2 as the HSC input length, othwise VSC length length is the same as the VSC line length just for special usage, more flexibilityi
21	R/W	0	lbuf_mode : //unsigned , default = 0 ,if true, prevsc uses lin buffer, otherwise prevsc does not use line buffer, it should be same as prevsc_en
20	R/W	0	prehsc_en : //unsigned , default = 0 ,prehsc_en
19	R/W	0	prevsc_en : //unsigned , default = 0 ,prevsc_en
18	R/W	0	vsc_en : //unsigned , default = 0 ,vsc_en
17	R/W	0	hsc_en : //unsigned , default = 0 ,hsc_en
16	R/W	0	sc_top_en : //unsigned , default = 0 ,scale_top_en
15	R/W	0	sc_vd_en : //unsigned , default = 0 ,video1 scale out enable
12	R/W	1	hsc_nonlinear_4region_en : //unsigned , default = 1 ,if true, region0,region4 are nonlinear regions, otherwise they are not scaling regions, for horizontal scaler
10:8	R/W	0	hsc_bank_length : //unsigned , default = 0 ,horizontal scaler bank length
5	R/W	4	vsc_phase_field_mode : //unsigned , default = 4 ,vertical scaler phase field mode, if true, disable the opposite parity line output, more bandwith needed if output 1080i
4	R/W	0	vsc_nonlinear_4region_en : //unsigned , default = 0 ,if true, region0,region4 are nonlinear regions, otherwise they are not scaling regions, for vertical scaler
2:0	R/W	4	vsc_bank_length : //unsigned , default = 4 ,vertical scaler bank length

Amlogic Proprietary and Confidential
Copyright © Amlogic. All rights reserved.

Table 10-1725 VD2_SCO_FIFO_CTRL 0x3949

Bit(s)	R/W	Default	Description
27:16	R/W	0	sco_fifo_line_lenm1 : //unsigned , default = 0xfff, scale out fifo line length minus 1
12:0	R/W	0	sco_fifo_size : //unsigned , default = 0x200, scale out fifo size (actually only bit 11:1 is valid, 11:1, max 1024), always even number

For 3D quincunx sub-sampling and horizontal pixel by pixel 3D interleaving.

Table 10-1726 VD2_HSC_PHASE_CTRL1 0x394a

Bit(s)	R/W	Default	Description
27:24	R/W	0	prehsc_mode : //unsigned , default = 0,prehsc_mode, bit 3:2, prehsc odd line interp mode, bit 1:0, prehsc even line interp mode, each 2bit, 00: pix0+pix1/2, average, 01: pix1, 10: pix0
23	R/W	0	hsc_double_pix_mode : //unsigned , default = 0,horizontal scaler double pixel mode
22:21	R/W	1	hsc_rpt_p0_num1 : //unsigned , default = 1,horizontal scaler initial repeat pixel0 number1
19:16	R/W	4	hsc_ini_rcv_num1 : //unsigned , default = 4,horizontal scaler initial receiving number1
15:0	R/W	0	hsc_ini_phase1 : //unsigned , default = 0,horizontal scaler top field initial phase1

For 3D quincunx sub-sampling:

Table 10-1727 VD2_HSC_INI_PAT_CTRL 0x394b

Bit(s)	R/W	Default	Description
31:24	R/W	0	prehsc_pattern : //unsigned , default = 0, prehsc pattern, each patten 1 bit, from lsb -> msb
22:20	R/W	0	prehsc_pat_star : //unsigned , default = 0, prehsc pattern start
18:16	R/W	0	prehsc_pat_end : //unsigned , default = 0, prehsc pattern end
15:8	R/W	0	hsc_pattern : //unsigned , default = 0, hsc pattern, each patten 1 bit, from lsb -> msb
6:4	R/W	0	hsc_pat_start : //unsigned , default = 0, hsc pattern start
2:0	R/W	0	hsc_pat_end : //unsigned , default = 0, hsc pattern end

Table 10-1728 VD2_SC_GCLK_CTRL 0x394c

Bit(s)	R/W	Default	Description
15:0	R/W	0	vpp_sc_gclk_ctrl : //unsigned , default = 0 ,scale clock gate

Amlogic Proprietary and Confidential
Copyright © Amlogic. All rights reserved.

10.2.3.28 Supper Scale/ Sharpness Registers

Table 10-1729 SRSHARP0_SHARP_HVSIZE 0x5000

Bit(s)	R/W	Default	Description
28:16	R/W	0d1920	reg_pknr_hsize : . unsigned , default = 1920
12: 0	R/W	0d1080	reg_pknr_vsize : . unsigned , default = 1080

Table 10-1730 SRSHARP0_SHARP_HVBLANK_NUM 0x5001

Bit(s)	R/W	Default	Description
23: 16	R/W	0d8	reg_deband_hblank : . unsigned , default = 8
15: 8	R/W	0d20	reg_pknr_hblank_num : . unsigned , default = 20
7: 0	R/W	0d60	reg_pknr_vblank_num : . unsigned , default = 60

Table 10-1731 SRSHARP0_NR_GAUSSIAN_MODE 0x5002

Bit(s)	R/W	Default	Description
13□12	R/W	0d0	reg_nr_gau_cnorm : : Y adaptive coef norm, 0: 128, 1: 256, 2: 512, 3: 1024 .unsigned , default = 0
9□8	R/W	0d0	reg_nr_gau_cnorm : : C adaptive coef norm, 0: 128, 1: 256, 2: 512, 3: 1024 .unsigned , default = 0
5□4	R/W	0d1	reg_nr_gau_ymode : : 0 3x3 filter; 1: 5x5 filter, 2/3: adaptive coef . unsigned , default = 1
1□0	R/W	0d1	reg_nr_gau_cmode : : 0 3x3 filter; 1: 5x5 filter, 2/3: adaptive coef . unsigned , default = 1

Table 10-1732 SRSHARP0_PK_CON_2CIRHPGAIN_TH_RATE 0x5005

Bit(s)	R/W	Default	Description
31:24	R/W	0d25	reg_pk_cirhpcon2gain0 : : threshold0 of curve to map hpcon to hpgain for circle hp filter (all 8 direction same). 0~255.. unsigned , default = 25
23:16	R/W	0d60	reg_pk_cirhpcon2gain1 : : threshold1 of curve to map hpcon to hpgain for circle hp filter (all 8 direction same). 0~255.. unsigned , default = 60
15: 8	R/W	0d80	reg_pk_cirhpcon2gain5 : : rate0 (for hpcon<th0) of curve to map hpcon to hpgain for circle hp filter (all 8 direction same). 0~255.. unsigned , default = 80
7: 0	R/W	0d20	reg_pk_cirhpcon2gain6 : : rate1 (for hpcon>th1) of curve to map hpcon to hpgain for circle hp filter (all 8 direction same). 0~255.. unsigned , default = 20

Amlogic Proprietary and Confidential
Copyright © Amlogic. All rights reserved.

Table 10-1733 SRSHARP0_PK_CON_2CIRHPGAIN_LIMIT 0x5006

Bit(s)	R/W	Default	Description
31:24	R/W	0d96	reg_pk_cirhpcon2gain2 : : level limit(for hpcon<th0) of curve to map hpcon to hpgain for circle hp filter (all 8 direction same). 0~255.. unsigned , default = 96
23:16	R/W	0d96	reg_pk_cirhpcon2gain3 : : level limit(for th0<hpcon<th1) of curve to map hpcon to hpgain for circle hp filter (all 8 direction same). 0~255.. unsigned , default = 96
15: 8	R/W	0d5	reg_pk_cirhpcon2gain4 : : level limit(for hpcon>th1) of curve to map hpcon to hpgain for circle hp filter (all 8 direction same). 0~255.. unsigned , default = 5

Table 10-1734 SRSHARP0_PK_CON_2CIRBPGAIN_TH_RATE 0x5007

Bit(s)	R/W	Default	Description
31:24	R/W	0d20	reg_pk_cirbpcon2gain0 : : threshold0 of curve to map bpcon to bpgain for circle bp filter (all 8 direction same). 0~255.. unsigned , default = 20
23:16	R/W	0d50	reg_pk_cirbpcon2gain1 : : threshold1 of curve to map bpcon to bpgain for circle bp filter (all 8 direction same).. unsigned , default = 50
15: 8	R/W	0d50	reg_pk_cirbpcon2gain5 : : rate0 (for bpcon<th0) of curve to map bpcon to bpgain for circle bp filter (all 8 direction same). 0~255.. unsigned , default = 50
7: 0	R/W	0d25	reg_pk_cirbpcon2gain6 : : rate1 (for bpcon>th1) of curve to map bpcon to bpgain for circle bp filter (all 8 direction same). 0~255.. unsigned , default = 25

Table 10-1735 SRSHARP0_PK_CON_2CIRBPGAIN_LIMIT 0x5008

Bit(s)	R/W	Default	Description
31:24	R/W	0d40	reg_pk_cirbpcon2gain2 : : level limit(for bpcon<th0) of curve to map bpcon to bpgain for circle bp filter (all 8 direction same). 0~255.. unsigned , default = 40
23:16	R/W	0d40	reg_pk_cirbpcon2gain3 : : level limit(for th0<bpcon<th1) of curve to map bpcon to bpgain for circle bp filter (all 8 direction same). 0~255.. unsigned , default = 40
15: 8	R/W	0d5	reg_pk_cirbpcon2gain4 : : level limit(for bpcon>th1) of curve to map bpcon to bpgain for circle bp filter (all 8 direction same). 0~255.. unsigned , default = 5

Table 10-1736 SRSHARP0_PK_CON_2DRTHPGAIN_TH_RATE 0x5009

Bit(s)	R/W	Default	Description
31:24	R/W	0d25	reg_pk_drthpcon2gain0 : : threshold0 of curve to map hpcon to hpgain for directional hp filter (best direction). 0~255.. unsigned , default = 25
23:16	R/W	0d60	reg_pk_drthpcon2gain1 : : threshold1 of curve to map hpcon to hpgain for directional hp filter (best direction). 0~255.. unsigned , default = 60
15: 8	R/W	0d80	reg_pk_drthpcon2gain5 : : rate0 (for hpcon<th0) of curve to map hpcon to hpgain for directional hp filter (best direction). 0~255.. unsigned , default = 80
7: 0	R/W	0d20	reg_pk_drthpcon2gain6 : : rate1 (for hpcon>th1) of curve to map hpcon to hpgain for directional hp filter (best direction). 0~255.. unsigned , default = 20

Amlogic Proprietary and Confidential
Copyright © Amlogic. All rights reserved.

Table 10-1737 SRSHARP0_PK_CON_2DRTHPGAIN_LIMIT 0x500a

Bit(s)	R/W	Default	Description
31:24	R/W	0d90	reg_pk_drthpcon2gain2 : : level limit(for hpcon<th0) of curve to map hpcon to hpgain for directional hp filter (best direction).. unsigned , default = 90
23:16	R/W	0d96	reg_pk_drthpcon2gain3 : : level limit(for th0<hpcon<th1) of curve to map hpcon to hpgain for directional hp filter (best direction). 0~255.. unsigned , default = 96
15: 8	R/W	0d5	reg_pk_drthpcon2gain4 : : level limit(for hpcon>th1) of curve to map hpcon to hpgain for directional hp filter (best direction). 0~255.. unsigned , default = 5

Table 10-1738 SRSHARP0_PK_CON_2DRTBPGAIN_TH_RATE 0x500b

Bit(s)	R/W	Default	Description
31:24	R/W	0d20	reg_pk_drtbpcon2gain0 : : threshold0 of curve to map bpcon to bpgain for directional bp filter (best direction). 0~255.. unsigned , default = 20
23:16	R/W	0d50	reg_pk_drtbpcon2gain1 : : threshold1 of curve to map bpcon to bpgain for directional bp filter (best direction). 0~255.. unsigned , default = 50
15: 8	R/W	0d50	reg_pk_drtbpcon2gain5 : : rate0 (for bpcon<th0) of curve to map bpcon to bpgain for directional bp filter (best direction). 0~255.. unsigned , default = 50
7: 0	R/W	0d25	reg_pk_drtbpcon2gain6 : : rate1 (for bpcon>th1) of curve to map bpcon to bpgain for directional bp filter (best direction). 0~255.. unsigned , default = 25

Table 10-1739 SRSHARP0_PK_CON_2DRTBPGAIN_LIMIT 0x500c

Bit(s)	R/W	Default	Description
31:24	R/W	0d40	reg_pk_drtbpcon2gain2 : : level limit(for bpcon<th0) of curve to map bpcon to bpgain for directional bp filter (best direction). 0~255.. unsigned , default = 40
23:16	R/W	0d40	reg_pk_drtbpcon2gain3 : : level limit(for th0<bpcon<th1) of curve to map bpcon to bpgain for directional bp filter (best direction). 0~255.. unsigned , default = 40
15: 8	R/W	0d5	reg_pk_drtbpcon2gain4 : : level limit(for bpcon>th1) of curve to map bpcon to bpgain for directional bp filter (best direction). 0~255.. unsigned , default = 5

Table 10-1740 SRSHARP0_PK_CIRFB_LPF_MODE 0x500d

Bit(s)	R/W	Default	Description
29:28	R/W	0d1	reg_cirhp_horz_mode : : no horz filter on HP; 1: [1 2 1]/4; 2/3: [1 2 2 2 1]/8 . unsigned , default = 1
25:24	R/W	0d1	reg_cirhp_vert_mode : : no vert filter on HP; 1: [1 2 1]/4; 2/3: [1 2 2 2 1]/8 . unsigned , default = 1
21:20	R/W	0d1	reg_cirhp_diag_mode : : filter on HP; 1: [1 2 1]/4; . unsigned , default = 1
13:12	R/W	0d1	reg_cirbp_horz_mode : : no horz filter on BP; 1: [1 2 1]/4; 2/3: [1 2 2 2 1]/8 . unsigned , default = 1
9: 8	R/W	0d1	reg_cirbp_vert_mode : : no vert filter on BP; 1: [1 2 1]/4; 2/3: [1 2 2 2 1]/8 . unsigned , default = 1
5: 4	R/W	0d1	reg_cirbp_diag_mode : : filter on BP; 1: [1 2 1]/4; . unsigned , default = 1

Amlogic Proprietary and Confidential
Copyright © Amlogic. All rights reserved.

Table 10-1741 SRSHARP0_PK_DRTFB_LPF_MODE 0x500e

Bit(s)	R/W	Default	Description
29:28	R/W	0d1	reg_drthp_horz_mode : : no horz filter on HP; 1: [1 2 1]/4; 2/3: [1 2 2 2 1]/8 2 . unsigned , default = 1
25:24	R/W	0d1	reg_drthp_vert_mode : : no vert filter on HP; 1: [1 2 1]/4; 2/3: [1 2 2 2 1]/8 2 . unsigned , default = 1
21:20	R/W	0d1	reg_drthp_diag_mode : : filter on HP; 1: [1 2 1]/4; 1 . unsigned , default = 1
13:12	R/W	0d1	reg_drtbp_horz_mode : : no horz filter on BP; 1: [1 2 1]/4; 2/3: [1 2 2 2 1]/8 2 . unsigned , default = 1
9: 8	R/W	0d1	reg_drtbp_vert_mode : : no vert filter on BP; 1: [1 2 1]/4; 2/3: [1 2 2 2 1]/8 2 . unsigned , default = 1
5: 4	R/W	0d1	reg_drtbp_diag_mode : : filter on BP; 1: [1 2 1]/4; 1 . unsigned , default = 1

Table 10-1742 SRSHARP0_PK_CIRFB_HP_CORING 0x500f

Bit(s)	R/W	Default	Description
21:16	R/W	0d4	reg_cirhp_horz_core : : coring of HP for Horz . unsigned , default = 4
13: 8	R/W	0d4	reg_cirhp_vert_core : : coring of HP for Vert . unsigned , default = 4
5: 0	R/W	0d4	reg_cirhp_diag_core : : coring of HP for Diag . unsigned , default = 4

Table 10-1743 SRSHARP0_PK_CIRFB_BP_CORING 0x5010

Bit(s)	R/W	Default	Description
21:16	R/W	0d4	reg_cirbp_horz_core : : coring of HP for Horz . unsigned , default = 4
13: 8	R/W	0d4	reg_cirbp_vert_core : : coring of HP for Vert . unsigned , default = 4
5: 0	R/W	0d4	reg_cirbp_diag_core : : coring of HP for Diag . unsigned , default = 4

Table 10-1744 SRSHARP0_PK_DRTFB_HP_CORING 0x3e11

Bit(s)	R/W	Default	Description
21:16	R/W	0d4	reg_drthp_horz_core : : coring of HP for Horz . unsigned , default = 4
13: 8	R/W	0d4	reg_drthp_vert_core : : coring of HP for Vert . unsigned , default = 4
5: 0	R/W	0d4	reg_drthp_diag_core : : coring of HP for Diag . unsigned , default = 4

Table 10-1745 SRSHARP0_PK_DRTFB_BP_CORING 0x5012

Bit(s)	R/W	Default	Description
21:16	R/W	0d4	reg_drtbp_horz_core : : coring of HP for Horz . unsigned , default = 4
13: 8	R/W	0d4	reg_drtbp_vert_core : : coring of HP for Vert . unsigned , default = 4
5: 0	R/W	0d4	reg_drtbp_diag_core : : coring of HP for Diag . unsigned , default = 4

Amlogic Proprietary and Confidential
Copyright © Amlogic. All rights reserved.

Table 10-1746 SRSHARP0_PK_CIRFB_BLEND_GAIN 0x5013

Bit(s)	R/W	Default	Description
31:28	R/W	0d8	reg_hp_cir_hgain : : normalized 8 as '1' . unsigned , default = 8
27:24	R/W	0d8	reg_hp_cir_vgain : : normalized 8 as '1' . unsigned , default = 8
23:20	R/W	0d8	reg_hp_cir_dgain : : normalized 8 as '1' . unsigned , default = 8
15:12	R/W	0d8	reg_bp_cir_hgain : : normalized 8 as '1' . unsigned , default = 8
11: 8	R/W	0d8	reg_bp_cir_vgain : : normalized 8 as '1' . unsigned , default = 8
7: 4	R/W	0d8	reg_bp_cir_dgain : : normalized 8 as '1' . unsigned , default = 8

Table 10-1747 SRSHARP0_NR_ALPY_SSD_GAIN_OFST 0x5014

Bit(s)	R/W	Default	Description
15: 8	R/W	0d16	reg_nr_alp0_ssd_gain : : gain to max ssd normalized 16 as '1' . unsigned , default = 16
5: 0	R/W	0x0	reg_nr_alp0_ssd_ofst : : offset to ssd before dividing to min_err . signed , default = -2

Table 10-1748 SRSHARP0_NR_ALP0Y_ERR2CURV_TH_RATE 0x5015

Bit(s)	R/W	Default	Description
31:24	R/W	0d10	reg_nr_alp0_minerr_ypar0 : : threshold0 of curve to map mierr to alp0 for luma channel, this will be set value of flat region mierr that no need blur. 0~255.. unsigned , default = 10
23:16	R/W	0d25	reg_nr_alp0_minerr_ypar1 : : threshold1 of curve to map mierr to alp0 for luma channel,this will be set value of texture region mierr that can not blur.. unsigned , default = 25
15: 8	R/W	0d80	reg_nr_alp0_minerr_ypar5 : : rate0 (for mierr<th0) of curve to map mierr to alp0 for luma channel. the larger of the value, the deep of the slope. 0~255.. unsigned , default = 80
7: 0	R/W	0d64	reg_nr_alp0_minerr_ypar6 : : rate1 (for mierr>th1) of curve to map mierr to alp0 for luma channel. the larger of the value, the deep of the slope. 0~255.. unsigned , default = 64

Table 10-1749 SRSHARP0_NR_ALP0Y_ERR2CURV_LIMIT 0x5016

Bit(s)	R/W	Default	Description
31:24	R/W	0d63	reg_nr_alp0_minerr_ypar2 : : level limit(for mierr<th0) of curve to map mierr to alp0 for luma channel, this will be set to alp0 that we can do for flat region. 0~255.. unsigned , default = 63
23:16	R/W	0d0	reg_nr_alp0_minerr_ypar3 : : level limit(for th0<mierr<th1) of curve to map mierr to alp0 for luma channel, this will be set to alp0 that we can do for misc region. 0~255.. unsigned , default = 0
15: 8	R/W	0d63	reg_nr_alp0_minerr_ypar4 : : level limit(for mierr>th1) of curve to map mierr to alp0 for luma channel, this will be set to alp0 that we can do for texture region. 0~255.. unsigned , default = 63

Amlogic Proprietary and Confidential
Copyright © Amlogic. All rights reserved.

Table 10-1750 SRSHARP0_NR_ALP0C_ERR2CURV_TH_RATE 0x5017

Bit(s)	R/W	Default	Description
31:24	R/W	0d10	reg_nr_alp0_minerr_cpar0 : : threshold0 of curve to map mierr to alp0 for chroma channel, this will be set value of flat region mierr that no need blur.. unsigned , default = 10
23:16	R/W	0d25	reg_nr_alp0_minerr_cpar1 : : threshold1 of curve to map mierr to alp0 for chroma channel,this will be set value of texture region mierr that can not blur.. unsigned , default = 25
15: 8	R/W	0d80	reg_nr_alp0_minerr_cpar5 : : rate0 (for mierr<th0) of curve to map mierr to alp0 for chroma channel. the larger of the value, the deep of the slope. 0~255.. unsigned , default = 80
7: 0	R/W	0d64	reg_nr_alp0_minerr_cpar6 : : rate1 (for mierr>th1) of curve to map mierr to alp0 for chroma channel. the larger of the value, the deep of the slope. 0~255.. unsigned , default = 64

Table 10-1751 SRSHARP0_NR_ALP0C_ERR2CURV_LIMIT 0x5018

Bit(s)	R/W	Default	Description
31:24	R/W	0d63	reg_nr_alp0_minerr_cpar2 : : level limit(for mierr<th0) of curve to map mierr to alp0 for chroma channel, this will be set to alp0 that we can do for flat region. 0~255.. unsigned , default = 63
23:16	R/W	0d0	reg_nr_alp0_minerr_cpar3 : : level limit(for th0<mierr<th1) of curve to map mierr to alp0 for chroma channel, this will be set to alp0 that we can do for misc region. 0~255.. unsigned , default = 0
15: 8	R/W	0d63	reg_nr_alp0_minerr_cpar4 : : level limit(for mierr>th1) of curve to map mierr to alp0 for chroma channel, this will be set to alp0 that we can do for texture region. 0~255.. unsigned , default = 63

Table 10-1752 SRSHARP0_NR_ALP0_MIN_MAX 0x5019

Bit(s)	R/W	Default	Description
29:24	R/W	0d2	reg_nr_alp0_ymin : : normalized to 64 as '1' . unsigned , default = 2
21:16	R/W	0d63	reg_nr_alp0_ymax : : normalized to 64 as '1' . unsigned , default = 63
13: 8	R/W	0d2	reg_nr_alp0_cmin : : normalized to 64 as '1' . unsigned , default = 2
5: 0	R/W	0d63	reg_nr_alp0_cmax : : normalized to 64 as '1' . unsigned , default = 63

Table 10-1753 SRSHARP0_NR_ALP1_MIERR_CORING 0x501a

Bit(s)	R/W	Default	Description
16	R/W	0d0	reg_nr_alp1_maxerr_mode : : 0 max err; 1: xerr . unsigned , default = 0
13: 8	R/W	0d0	reg_nr_alp1_core_rate : : normalized 64 as "1" . unsigned , default = 0
5: 0	R/W	0d3	reg_nr_alp1_core_ofst : : normalized 64 as "1" . signed , default = 3

Amlogic Proprietary and Confidential
Copyright © Amlogic. All rights reserved.

Table 10-1754 SRSHARP0_NR_ALP1_ERR2CURV_TH_RATE 0x501b

Bit(s)	R/W	Default	Description
31:24	R/W	0d0	reg_nr_alp1_minerr_par0 : : threshold0 of curve to map mierr to alp1 for luma/ chroma channel, this will be set value of flat region mierr that no need directional NR. 0~255.. unsigned , default = 0
23:16	R/W	0d24	reg_nr_alp1_minerr_par1 : : threshold1 of curve to map mierr to alp1 for luma/ chroma channel,this will be set value of texture region mierr that can not do directional NR. 0~255.. unsigned , default = 24
15: 8	R/W	0d0	reg_nr_alp1_minerr_par5 : : rate0 (for mierr<th0) of curve to map mierr to alp1 for luma/chroma channel. the larger of the value, the deep of the slope.. unsigned , default = 0
7: 0	R/W	0d20	reg_nr_alp1_minerr_par6 : : rate1 (for mierr>th1) of curve to map mierr to alp1 for luma/chroma channel. the larger of the value, the deep of the slope. 0~255. unsigned , default = 20

Table 10-1755 SRSHARP0_NR_ALP1_ERR2CURV_LIMIT 0x501c

Bit(s)	R/W	Default	Description
31:24	R/W	0d0	reg_nr_alp1_minerr_par2 : : level limit(for mierr<th0) of curve to map mierr to alp1 for luma/chroma channel, this will be set to alp1 that we can do for flat region. 0~255.. unsigned , default = 0
23:16	R/W	0d16	reg_nr_alp1_minerr_par3 : : level limit(for th0<mierr<th1) of curve to map mierr to alp1 for luma/chroma channel, this will be set to alp1 that we can do for misc region. 0~255.. unsigned , default = 16
15: 8	R/W	0d63	reg_nr_alp1_minerr_par4 : : level limit(for mierr>th1) of curve to map mierr to alp1 for luma/chroma channel, this will be set to alp1 that we can do for texture region. 0~255.255 before. unsigned , default = 63

Table 10-1756 SRSHARP0_NR_ALP1_MIN_MAX 0x501d

Bit(s)	R/W	Default	Description
29:24	R/W	0d0	reg_nr_alp1_ymin : : normalized to 64 as '1' . unsigned , default = 0
21:16	R/W	0d63	reg_nr_alp1_ymax : : normalized to 64 as '1' . unsigned , default = 63
13: 8	R/W	0d0	reg_nr_alp1_cmin : : normalized to 64 as '1' . unsigned , default = 0
5: 0	R/W	0d63	reg_nr_alp1_cmax : : normalized to 64 as '1' . unsigned , default = 63

Table 10-1757 SRSHARP0_PK_ALP2_MIERR_CORING 0x501e

Bit(s)	R/W	Default	Description
16	R/W	0d1	reg_pk_alp2_maxerr_mode : : 0 max err; 1: xerr . unsigned , default = 1
13: 8	R/W	0d13	reg_pk_alp2_core_rate : : normalized 64 as "1" . unsigned , default = 13
5: 0	R/W	0d1	reg_pk_alp2_core_ofst : : normalized 64 as "1" . signed , default = 1

Amlogic Proprietary and Confidential
Copyright © Amlogic. All rights reserved.

Table 10-1758 SRSHARP0_PK_ALP2_ERR2CURV_TH_RATE 0x501f

Bit(s)	R/W	Default	Description
31:24	R/W	0d0	reg_pk_alp2_minerr_par0 : : threshold0 of curve to map mierr to alp2 for luma channel, this will be set value of flat region mierr that no need peaking.. unsigned , default = 0
23:16	R/W	0d24	reg_pk_alp2_minerr_par1 : : threshold1 of curve to map mierr to alp2 for luma channel,this will be set value of texture region mierr that can not do peaking. 0~255.. unsigned , default = 24
15: 8	R/W	0d0	reg_pk_alp2_minerr_par5 : : rate0 (for mierr<th0) of curve to map mierr to alp2 for luma channel. the larger of the value, the deep of the slope. 0~255.. unsigned , default = 0
7: 0	R/W	0d20	reg_pk_alp2_minerr_par6 : : rate1 (for mierr>th1) of curve to map mierr to alp2 for luma channel. the larger of the value, the deep of the slope. 0~255.. unsigned , default = 20

Table 10-1759 SRSHARP0_PK_ALP2_ERR2CURV_LIMIT 0x5020

Bit(s)	R/W	Default	Description
31:24	R/W	0d0	reg_pk_alp2_minerr_par2 : : level limit(for mierr<th0) of curve to map mierr to alp2 for luma channel, this will be set to alp2 that we can do for flat region. 0~255.. unsigned , default = 0
23:16	R/W	0d16	reg_pk_alp2_minerr_par3 : : level limit(for th0<mierr<th1) of curve to map mierr to alp2 for luma channel, this will be set to alp2 that we can do for misc region. 0~255.. unsigned , default = 16
15: 8	R/W	0d63	reg_pk_alp2_minerr_par4 : : level limit(for mierr>th1) of curve to map mierr to alp2 for luma channel, this will be set to alp2 that we can do for texture region. 0~255. default = 63;. unsigned , default = 255

Table 10-1760 SRSHARP0_PK_ALP2_MIN_MAX 0x5021

Bit(s)	R/W	Default	Description
13: 8	R/W	0d0	reg_pk_alp2_min : : normalized to 64 as '1' . unsigned , default = 0
5: 0	R/W	0d63	reg_pk_alp2_max : : normalized to 64 as '1' . unsigned , default = 63

Table 10-1761 SRSHARP0_PK_FINALGAIN_HP_BP 0x5022

Bit(s)	R/W	Default	Description
17: 16	R/W	0d0	reg_final_gain_rs : : right shift bits for the gain normalization, 0 normal to 32 as 1; 1 normal to 64 as 1; -2 normal to 8 as 1; -1 normal to 16 as 1 . signed , default = 0
15: 8	R/W	0d40	reg_hp_final_gain : : gain to highpass boost result (including directional/circle blending), normalized 32 as '1', 0~255. 1.25 * 32. unsigned , default = 40
7: 0	R/W	0d30	reg_bp_final_gain : : gain to bandpass boost result (including directional/circle blending), normalized 32 as '1', 0~255. 1.25 * 32. unsigned , default = 30

Amlogic Proprietary and Confidential
Copyright © Amlogic. All rights reserved.

Table 10-1762 SRSHARP0_PK_OS_HORZ_CORE_GAIN 0x5023

Bit(s)	R/W	Default	Description
31:24	R/W	0d8	reg_pk_os_hsidecore : : side coring (not to current pixel) to adaptive overshoot margin in horizontal direction. the larger of this value, the less overshoot admitted 0~255;. unsigned , default = 8
23:16	R/W	0d20	reg_pk_os_hsidegain : : side gain (not to current pixel) to adaptive overshoot margin in horizontal direction. normalized to 32 as '1'. 0~255;. unsigned , default = 20
15: 8	R/W	0d2	reg_pk_os_hmidcore : : midd coring (to current pixel) to adaptive overshoot margin in horizontal direction. the larger of this value, the less overshoot admitted 0~255;. unsigned , default = 2
7: 0	R/W	0d20	reg_pk_os_hmidgain : : midd gain (to current pixel) to adaptive overshoot margin in horizontal direction. normalized to 32 as '1'. 0~255;. unsigned , default = 20

Table 10-1763 SRSHARP0_PK_OS_VERT_CORE_GAIN 0x5024

Bit(s)	R/W	Default	Description
31:24	R/W	0d8	reg_pk_os_vsidecore : : side coring (not to current pixel) to adaptive overshoot margin in vertical direction. the larger of this value, the less overshoot admitted 0~255;. unsigned , default = 8
23:16	R/W	0d20	reg_pk_os_vsidegain : : side gain (not to current pixel) to adaptive overshoot margin in vertical direction. normalized to 32 as '1'. 0~255;. unsigned , default = 20
15: 8	R/W	0d2	reg_pk_os_vmidcore : : midd coring (to current pixel) to adaptive overshoot margin in vertical direction. the larger of this value, the less overshoot admitted 0~255;. unsigned , default = 2
7: 0	R/W	0d20	reg_pk_os_vmidgain : : midd gain (to current pixel) to adaptive overshoot margin in vertical direction. normalized to 32 as '1'. 0~255;. unsigned , default = 20

Table 10-1764 SRSHARP0_PK_OS_ADPT_MISC 0x5025

Bit(s)	R/W	Default	Description
31:24	R/W	0d40	reg_pk_os_minerr_core : : coring to minerr for adaptive overshoot margin. the larger of this value, the less overshoot admitted 0~255;. unsigned , default = 40
23:16	R/W	0d6	reg_pk_os_minerr_gain : : gain to minerr based adaptive overshoot margin. normalized to 64 as '1'. 0~255;. unsigned , default = 6
15: 8	R/W	0d200	reg_pk_os_adpt_max : : maximum limit adaptive overshoot margin (4x). 0~255; . unsigned , default = 200
7: 0	R/W	0d20	reg_pk_os_adpt_min : : minimun limit adaptive overshoot margin (1x). 0~255; . unsigned , default = 20

Table 10-1765 SRSHARP0_PK_OS_STATIC 0x5026

Bit(s)	R/W	Default	Description
29:28	R/W	0d2	reg_pk_osh_mode : : 0~3: (2x+1) window in H direction . unsigned , default = 2
25:24	R/W	0d2	reg_pk_osv_mode : : 0~3: (2x+1) window in V direction . unsigned , default = 2

Amlogic Proprietary and Confidential
Copyright © Amlogic. All rights reserved.

Bit(s)	R/W	Default	Description
21:12	R/W	0d200	reg_pk_os_down : : static negative overshoot margin. 0~1023; . unsigned , default = 200
9: 0	R/W	0d200	reg_pk_os_up : : static positive overshoot margin. 0~1023; . unsigned , default = 200

Table 10-1766 SRSHARP0_PK_NR_ENABLE 0x5027

Bit(s)	R/W	Default	Description
3: 2	R/W	0d0	reg_3d_mode : , 0: no 3D; 1: L/R; 2: T/B; 3: horizontal interleaved, dft = 0 //. unsigned , default = 0
1	R/W	0d1	reg_pk_en : . unsigned , default = 1
0	R/W	0d1	reg_nr_en : . unsigned , default = 1

Table 10-1767 SRSHARP0_PK_DRT_SAD_MISC 0x5028

Bit(s)	R/W	Default	Description
31:24	R/W	0d24	reg_pk_sad_ver_gain : : gain to sad[4], 16 normalized to "1"; . unsigned , default = 24
23:16	R/W	0d24	reg_pk_sad_hor_gain : : gain to sad[0], 16 normalized to "1"; . unsigned , default = 24
10: 9	R/W	0d0	reg_pk_bias_diag : : bias towards diag . unsigned , default = 0
4: 0	R/W	0d24	reg_pk_drt_force : : force direction of drt peaking filter, h2b: 0:hp drt force, 1: bp drt force; 2: bp+hp drt force, 3: no force;. unsigned , default = 24

Table 10-1768 SRSHARP0_NR_TI_DNLP_BLEND 0x5029

Bit(s)	R/W	Default	Description
10: 8	R/W	0d4	reg_dnlp_input_mode : : dnlp input options. 0: org_y; 1: gau_y; 2: gauadp_y; 3: edgadplpf_y; 4: nr_y;5: lti_y; 6: pk_y (before os);7: pk_y (after os). unsigned , default = 4
3: 2	R/W	0d1	reg_nr_cti_blend_mode : : blend mode of nr and lti result: 0: nr; 1:cti; 2: (nr+cti)/2; 3:cti + dlt_nr . unsigned , default = 1
1: 0	R/W	0d1	reg_nr_lti_blend_mode : : blend mode of nr and lti result: 0: nr; 1:lti; 2: (nr+lti)/2; 3:lti + dlt_nr . unsigned , default = 1

Table 10-1769 SRSHARP0_TI_DIR_CORE_ALPHA 0x502a

Bit(s)	R/W	Default	Description
29:24	R/W	0d10	reg_adp_lti_dir_alp_core_ofst : : ofst to min_err, alpha = (min_err - (max_err-min_err)*rate + ofst)/max_err*64; dft=10. unsigned , default = 10
19:16	R/W	0d0	reg_adp_lti_dir_alp_core_rate : : ofset to min_err, alpha = (min_err - (max_err-min_err)*rate + ofst)/max_err*64; dft=0/32. unsigned , default = 0
13: 8	R/W	0d0	reg_adp_lti_dir_alpmin : : min value of alpha, alpha = (min_err+x +ofst)/max_err*64; dft=10 . unsigned , default = 0
5: 0	R/W	0d63	reg_adp_lti_dir_alpmax : : max value of alpha, alpha = (min_err+x +ofst)/max_err*64; dft=63 . unsigned , default = 63

Amlogic Proprietary and Confidential
Copyright © Amlogic. All rights reserved.

Table 10-1770 SRSHARP0_CTI_DIR_ALPHA 0x502b

Bit(s)	R/W	Default	Description
29:24	R/W	0d5	reg_adp_cti_dir_alp_core_ofst : : ofst to min_err, alpha = (min_err - (max_err-min_err)*rate + ofst)/max_err*64; dft=10. unsigned , default = 5
19:16	R/W	0d0	reg_adp_cti_dir_alp_core_rate : : ofset to min_err, alpha = (min_err - (max_err-min_err)*rate + ofst)/max_err*64; dft=0/32. unsigned , default = 0
13: 8	R/W	0d0	reg_adp_cti_dir_alpmin : : min value of alpha, alpha = (min_err +x+ofst)/max_ err*64; dft=10 . unsigned , default = 0
5: 0	R/W	0d63	reg_adp_cti_dir_alpmax : : max value of alpha, alpha = (min_err +x+ofst)/max_ err*64; dft=63 . unsigned , default = 63

Table 10-1771 SRSHARP0_LTI_CTI_DF_GAIN 0x502c

Bit(s)	R/W	Default	Description
29:24	R/W	0d16	reg_adp_lti_hdf_gain : : 8 normalized to "1"; default = 16 . unsigned , default = 16
21:16	R/W	0d12	reg_adp_lti_vdf_gain : : 8 normalized to "1"; default = 12 . unsigned , default = 12
13: 8	R/W	0d16	reg_adp_cti_hdf_gain : : 8 normalized to "1"; default = 16 . unsigned , default = 16
5: 0	R/W	0d12	reg_adp_cti_vdf_gain : : 8 normalized to "1"; default = 12 . unsigned , default = 12

Table 10-1772 SRSHARP0_LTI_CTI_DIR_AC_DBG 0x502d

Bit(s)	R/W	Default	Description
30	R/W	0d1	reg_adp_lti_dir_lpf : : 0: no lpf; 1: [1 2 2 2 1]/8 lpf . unsigned , default = 1
28	R/W	0d0	reg_adp_lti_dir_difmode : : 0: y_dif; 1: y_dif + (u_dif+v_dif)/2; . unsigned , default = 0
26	R/W	0d1	reg_adp_cti_dir_lpf : : 0: no lpf; 1: [1 2 2 2 1]/8 lpf dft=1 . unsigned , default = 1
25:24	R/W	0d0	reg_adp_cti_dir_difmode : : 0: (u_dif+v_dif); 1: y_dif/2 + (u_dif+v_dif)*3/4; 2: y_ dif + (u_dif+v_dif)/2; 3: y_dif*2 (not recomended). unsigned , default = 0
23:22	R/W	0d3	reg_adp_hvlti_dcblend_mode : : 0: hlti_dc; 1:vlti_dc; 2: avg 3; blend on alpha . unsigned , default = 3
21:20	R/W	0d3	reg_adp_hvcti_dcblend_mode : : 0: hcti_dc; 1:vcti_dc; 2: avg 3; blend on alpha . unsigned , default = 3
19:18	R/W	0d3	reg_adp_hvlti_acblend_mode : : hlti_ac; 1:vlti_ac; 2: add 3;:adaptive to alpha . unsigned , default = 3
17:16	R/W	0d3	reg_adp_hvcti_acblend_mode : : hcti_ac; 1:vcti_ac; 2: add 3;: adaptive to alpha . unsigned , default = 3
14:12	R/W	0d0	reg_adp_hlti_debug : , for hlti debug, default = 0 . unsigned , default = 0
10: 8	R/W	0d0	reg_adp_vlti_debug : , for vlti debug, default = 0 . unsigned , default = 0
6: 4	R/W	0d0	reg_adp_hcti_debug : , for hcti debug, default = 0 . unsigned , default = 0
2: 0	R/W	0d0	reg_adp_vcti_debug : , for vcti debug, default = 0 . unsigned , default = 0

Amlogic Proprietary and Confidential
Copyright © Amlogic. All rights reserved.

Table 10-1773 SRSHARP0_HCTI_FLT_CLP_DC 0x502e

Bit(s)	R/W	Default	Description
28	R/W	0d1	reg_adp_hcti_en : , 0: no cti, 1: new cti, default = 1 . unsigned , default = 1
27:26	R/W	0d3	reg_adp_hcti_vdn_flt : , 0: no lpf; 1:[0,2,4,2,0], 2 : [1 2 2 2 1]/8 3:[1 0 2 0 1]/4, default = 3 . unsigned , default = 3
25:24	R/W	0d2	reg_adp_hcti_hdn_flt : , 0: no lpf; 1:[0, 0, 0, 4, 8, 4, 0, 0, 0], 2:[0, 0, 2, 4, 4, 4, 2, 0, 0], 3: [1, 2, 2, 2, 2, 2, 2, 2, 1], default = 2. unsigned , default = 2
23:22	R/W	0d3	reg_adp_hcti_ddn_flt : , 0: no lpf; 1:[0,2,4,2,0], 2 : [1 2 2 2 1]/8 3:[1 0 2 0 1]/4, default = 3 . unsigned , default = 3
21:20	R/W	0d2	reg_adp_hcti_lpf0_flt : , 0:no filter; 1:sigma=0.75, 2: sigma = 1.0, 3: sigma = 1.5, default = 2 . unsigned , default = 2
19:18	R/W	0d2	reg_adp_hcti_lpf1_flt : , 0:no filter; 1:sigma= 2.0, 2: sigma = 3.0, 3: sigma = 4.0, default = 2 . unsigned , default = 2
17:16	R/W	0d2	reg_adp_hcti_lpf2_flt : , 0:no filter; 1:sigma=5.0, 2: sigma = 9.0, 3: sigma = 13.0, default = 2 . unsigned , default = 2
15:12	R/W	0d7	reg_adp_hcti_hard_clp_win : , window size, 0~8, default = 7 . unsigned , default = 7
11: 8	R/W	0d3	reg_adp_hcti_hard_win_min : , window size, 0~8, default = 3 . unsigned , default = 3
4	R/W	0d1	reg_adp_hcti_clp_mode : , 0: hard clip, 1: adaptive clip, default = 1 . unsigned , default = 1
2: 0	R/W	0d0	reg_adp_hcti_dc_mode : , 0:dn, 1:lpf0, 2:lpf1, 3:lpf2, 4: lpf3: 5: vdn result; 6/7: org, default = 0 . unsigned , default = 0

Table 10-1774 SRSHARP0_HCTI_BST_GAIN 0x502f

Bit(s)	R/W	Default	Description
31:24	R/W	0d80	reg_adp_hcti_bst_gain0 : : gain of the bandpass 0 (lpf1-lpf2)- LBP, default = 80 . unsigned , default = 80
23:16	R/W	0d96	reg_adp_hcti_bst_gain1 : : gain of the bandpass 1 (lpf0-lpf1)- BP, default = 96 . unsigned , default = 96
15: 8	R/W	0d64	reg_adp_hcti_bst_gain2 : : gain of the bandpass 2 (hdn-lpf0)- HP, default = 64 . unsigned , default = 64
7: 0	R/W	0d16	reg_adp_hcti_bst_gain3 : : gain of the unsharp band (yuvin-hdn) - US, default = 16 . unsigned , default = 16

Table 10-1775 SRSHARP0_HCTI_BST_CORE 0x5030

Bit(s)	R/W	Default	Description
31:24	R/W	0d0	reg_adp_hcti_bst_core0 : : core of the bandpass 0 (lpf1-lpf2)- LBP, default = 0 . unsigned , default = 0
23:16	R/W	0d0	reg_adp_hcti_bst_core1 : : core of the bandpass 1 (lpf0-lpf1)- BP, default = 0 . unsigned , default = 0
15: 8	R/W	0d0	reg_adp_hcti_bst_core2 : : core of the bandpass 2 (hdn-lpf0)- HP, default = 0 . unsigned , default = 0
7: 0	R/W	0d0	reg_adp_hcti_bst_core3 : : core of the unsharp band (yuvin-hdn) - US, default = 0 . unsigned , default = 0

Amlogic Proprietary and Confidential
Copyright © Amlogic. All rights reserved.

Table 10-1776 SRSHARP0_HCTI_CON_2_GAIN_0 0x5031

Bit(s)	R/W	Default	Description
31:29	R/W	0d2	reg_adp_hcti_con_mode : : con mode 0:[0, 0,-1, 1, 0, 0, 0]+[0, 0, 0, 1,-1, 0, 0], 1: [0, 0,-1, 0, 1, 0, 0], 2: [0,-1, 0, 0, 0, 1, 0], 3:[-1, 0, 0, 0, 0, 0, 1], 4: .... default = 2. unsigned , default = 2
28:26	R/W	0d3	reg_adp_hcti_dx_mode : : dx mode 0: [-1 1 0]; 1~7: [-1 (2x+1)"0" 1], default = 3 . unsigned , default = 3
25:24	R/W	0d1	reg_adp_hcti_con_lpf : : lpf mode of the con: 0: [1 2 1]/4; 1:[1 2 2 2 1]/8, default = 1 . unsigned , default = 1
23:16	R/W	0d25	reg_adp_hcti_con_2_gain0 : , default = 25 . unsigned , default = 25
15: 8	R/W	0d60	reg_adp_hcti_con_2_gain1 : , default = 60 . unsigned , default = 60
7: 0	R/W	0d0	reg_adp_hcti_con_2_gain2 : 0;, default = 0 . unsigned , default = 0

Table 10-1777 SRSHARP0_HCTI_CON_2_GAIN_1 0x5032

Bit(s)	R/W	Default	Description
31:24	R/W	0d96	reg_adp_hcti_con_2_gain3 : 96;, default = 96 . unsigned , default = 96
23:16	R/W	0d5	reg_adp_hcti_con_2_gain4 : 5;, default = 5 . unsigned , default = 5
15: 8	R/W	0d80	reg_adp_hcti_con_2_gain5 : 80;, default = 80 . unsigned , default = 80
7: 0	R/W	0d20	reg_adp_hcti_con_2_gain6 : 20;, default = 20 . unsigned , default = 20

Table 10-1778 SRSHARP0_HCTI_OS_MARGIN 0x5033

Bit(s)	R/W	Default	Description
7: 0	R/W	0d0	reg_adp_hcti_os_margin : : margin for hcti overshoot, default = 0 . unsigned , default = 0

Table 10-1779 SRSHARP0_HLTI_FLT_CLP_DC 0x5034

Bit(s)	R/W	Default	Description
28	R/W	0d1	reg_adp_hlti_en : , 0: no cti, 1: new cti, default = 1 . unsigned , default = 1
27:26	R/W	0d2	reg_adp_hlti_vdn_flt : , 0: no lpf; 1:[0,2,4,2,0], 2 : [1 2 2 2 1]/8 3:[1 0 2 0 1]/4, default = 2 . unsigned , default = 2
25:24	R/W	0d2	reg_adp_hlti_hdn_flt : , 0: no lpf; 1:[0, 0, 0, 4, 8, 4, 0, 0, 0], 2:[0, 0, 2, 4, 4, 4, 2, 0, 0], 3: [1, 2, 2, 2, 2, 2, 2, 2, 1], default = 2. unsigned , default = 2
23:22	R/W	0d2	reg_adp_hlti_ddn_flt : , 0: no lpf; 1:[0,2,4,2,0], 2 : [1 2 2 2 1]/8 3:[1 0 2 0 1]/4, default = 2 . unsigned , default = 2
21:20	R/W	0d2	reg_adp_hlti_lpf0_flt : , 0:no filter; 1:sigma=0.75, 2: sigma = 1.0, 3: sigma = 1.5, default = 2 . unsigned , default = 2
19:18	R/W	0d2	reg_adp_hlti_lpf1_flt : , 0:no filter; 1:sigma= 2.0, 2: sigma = 3.0, 3: sigma = 4.0, default = 2 . unsigned , default = 2
17:16	R/W	0d2	reg_adp_hlti_lpf2_flt : , 0:no filter; 1:sigma=5.0, 2: sigma = 9.0, 3: sigma = 13.0, default = 2 . unsigned , default = 2

Amlogic Proprietary and Confidential
Copyright © Amlogic. All rights reserved.

Bit(s)	R/W	Default	Description
15:12	R/W	0d2	reg_adp_hlti_hard_clp_win : , window size, 0~8, default = 2 . unsigned , default = 2
11: 8	R/W	0d1	reg_adp_hlti_hard_win_min : , window size, 0~8, default = 1 . unsigned , default = 1
4	R/W	0d0	reg_adp_hlti_clp_mode : , 0: hard clip, 1: adaptive clip, default = 0 . unsigned , default = 0
2: 0	R/W	0d4	reg_adp_hlti_dc_mode : , 0:dn, 1:lpf0, 2:lpf1, 3:lpf2, 4: lpf3: 5: vdn result; 6/7:org, default = 4 . unsigned , default = 4

Table 10-1780 SRSHARP0_HLTI_BST_GAIN 0x5035

Bit(s)	R/W	Default	Description
31:24	R/W	0d40	reg_adp_hlti_bst_gain0 : : gain of the bandpass 0 (lpf1-lpf2)- LBP, default = 40 . unsigned , default = 40
23:16	R/W	0d48	reg_adp_hlti_bst_gain1 : : gain of the bandpass 1 (lpf0-lpf1)- BP, default = 48 . unsigned , default = 48
15: 8	R/W	0d32	reg_adp_hlti_bst_gain2 : : gain of the bandpass 2 (hdn-lpf0)- HP, default = 32 . unsigned , default = 32
7: 0	R/W	0d16	reg_adp_hlti_bst_gain3 : : gain of the unsharp band (yuvin-hdn) - US, default = 16 . unsigned , default = 16

Table 10-1781 SRSHARP0_HLTI_BST_CORE 0x5036

Bit(s)	R/W	Default	Description
31:24	R/W	0d5	reg_adp_hlti_bst_core0 : : core of the bandpass 0 (lpf1-lpf2)- LBP, default = 5 . unsigned , default = 5
23:16	R/W	0d5	reg_adp_hlti_bst_core1 : : core of the bandpass 1 (lpf0-lpf1)- BP, default = 5 . unsigned , default = 5
15: 8	R/W	0d5	reg_adp_hlti_bst_core2 : : core of the bandpass 2 (hdn-lpf0)- HP, default = 5 . unsigned , default = 5
7: 0	R/W	0d3	reg_adp_hlti_bst_core3 : : core of the unsharp band (yuvin-hdn) - US, default = 3 . unsigned , default = 3

Table 10-1782 SRSHARP0_HLTI_CON_2_GAIN_0 0x5037

Bit(s)	R/W	Default	Description
31:29	R/W	0d2	reg_adp_hlti_con_mode : : con mode 0:[0, 0,-1, 1, 0, 0, 0]+[0, 0, 0, 1,-1, 0, 0], 1: [0, 0,-1, 0, 1, 0, 0], 2: [0,-1, 0, 0, 0, 1, 0], 3:[-1, 0, 0, 0, 0, 0, 1], 4: ....., default = 2. unsigned , default = 2
28:26	R/W	0d3	reg_adp_hlti_dx_mode : : dx mode 0: [-1 1 0]; 1~7: [-1 (2x+1)"0" 1], default = 3 . unsigned , default = 3
25:24	R/W	0d1	reg_adp_hlti_con_lpf : : lpf mode of the con: 0: [1 2 1]/4; 1:[1 2 2 2 1]/8, default = 1 . unsigned , default = 1
23:16	R/W	0d25	reg_adp_hlti_con_2_gain0 : 25;, default = 25 . unsigned , default = 25
15: 8	R/W	0d60	reg_adp_hlti_con_2_gain1 : 60;, default = 60 . unsigned , default = 60
7: 0	R/W	0d90	reg_adp_hlti_con_2_gain2 : 0;, default = 90 . unsigned , default = 90

Amlogic Proprietary and Confidential
Copyright © Amlogic. All rights reserved.

Table 10-1783 SRSHARP0_HLTI_CON_2_GAIN_1 0x5038

Bit(s)	R/W	Default	Description
31:24	R/W	0d96	reg_adp_hlti_con_2_gain3 : 96;, default = 96 . unsigned , default = 96
23:16	R/W	0d95	reg_adp_hlti_con_2_gain4 : 5;, default = 95 . unsigned , default = 95
15: 8	R/W	0d80	reg_adp_hlti_con_2_gain5 : 80;, default = 80 . unsigned , default = 80
7: 0	R/W	0d20	reg_adp_hlti_con_2_gain6 : 20;, default = 20 . unsigned , default = 20

Table 10-1784 SRSHARP0_HLTI_OS_MARGIN 0x5039

Bit(s)	R/W	Default	Description
7: 0	R/W	0d0	reg_adp_hlti_os_margin : : margin for hlti overshoot, default = 0 . unsigned , default = 0

Table 10-1785 SRSHARP0_VLTI_FLT_CON_CLP 0x503a

Bit(s)	R/W	Default	Description
14	R/W	0d1	reg_adp_vlti_en : : enable bit of vlti, default = 1 . unsigned , default = 1
13:12	R/W	0d3	reg_adp_vlti_hxn_flt : : 0: no dn; 1: [1 2 1]/4; 2 : [1 2 2 2 1]/8 3:[1 0 2 0 1]/4, default = 3 . unsigned , default = 3
11:10	R/W	0d3	reg_adp_vlti_dxn_flt : : 0: no dn; 1: [1 2 1]/4; 2 : [1 2 2 2 1]/8 3:[1 0 2 0 1]/4, default = 3 . unsigned , default = 3
9: 8	R/W	0d3	reg_adp_vlti_han_flt : : 0: no dn; 1: [1 2 1]/4; 2 : [1 2 2 2 1]/8 3:[1 0 2 0 1]/4, default = 3 . unsigned , default = 3
7: 6	R/W	0d3	reg_adp_vlti_dan_flt : : 0: no dn; 1: [1 2 1]/4; 2 : [1 2 2 2 1]/8 3:[1 0 2 0 1]/4, default = 3 . unsigned , default = 3
5: 4	R/W	0d2	reg_adp_vlti_dx_mode : : 0:[-1 1] 1:[-1 0 -1]; 2/3: [-1 0 0 0 -1], default = 2 . unsigned , default = 2
2	R/W	0d1	reg_adp_vlti_con_lpf : : lpf mode of the con: 0: [1 2 1]/4; 1:[1 2 2 2 1]/8, default = 1 . unsigned , default = 1
0	R/W	0d1	reg_adp_vlti_hard_clp_win : : window size; 0: 1x3 window; 1: 1x5 window, default = 1 . unsigned , default = 1

Table 10-1786 SRSHARP0_VLTI_BST_GAIN 0x503b

Bit(s)	R/W	Default	Description
23:16	R/W	0d32	reg_adp_vlti_bst_gain0 : : gain to boost filter [-1 2 -1];, default = 32 . unsigned , default = 32
15: 8	R/W	0d32	reg_adp_vlti_bst_gain1 : : gain to boost filter [-1 0 2 0 -1];, default = 32 . unsigned , default = 32
7: 0	R/W	0d32	reg_adp_vlti_bst_gain2 : : gain to boost filter usf, default = 32 . unsigned , default = 32

Amlogic Proprietary and Confidential
Copyright © Amlogic. All rights reserved.

Table 10-1787 SRSHARP0_VLTI_BST_CORE 0x503c

Bit(s)	R/W	Default	Description
23:16	R/W	0d5	reg_adp_vlti_bst_core0 : : coring to boost filter [-1 2 -1];, default = 5 . unsigned , default = 5
15: 8	R/W	0d5	reg_adp_vlti_bst_core1 : : coring to boost filter [-1 0 2 0 -1];, default = 5 . unsigned , default = 5
7: 0	R/W	0d3	reg_adp_vlti_bst_core2 : : coring to boost filter usf, default = 3 . unsigned , default = 3

Table 10-1788 SRSHARP0_VLTI_CON_2_GAIN_0 0x503d

Bit(s)	R/W	Default	Description
31:24	R/W	0d25	reg_adp_vlti_con_2_gain0 : 25;, default = 25 . unsigned , default = 25
23:16	R/W	0d69	reg_adp_vlti_con_2_gain1 : 60;, default = 69 . unsigned , default = 60
15: 8	R/W	0d90	reg_adp_vlti_con_2_gain2 : 0;, default = 90 . unsigned , default = 90
7: 0	R/W	0d96	reg_adp_vlti_con_2_gain3 : 96;, default = 96 . unsigned , default = 96

Table 10-1789 SRSHARP0_VLTI_CON_2_GAIN_1 0x503e

Bit(s)	R/W	Default	Description
31:24	R/W	0d95	reg_adp_vlti_con_2_gain4 : 5;, default = 95 . unsigned , default = 95
23:16	R/W	0d80	reg_adp_vlti_con_2_gain5 : 80;, default = 80 . unsigned , default = 80
15: 8	R/W	0d20	reg_adp_vlti_con_2_gain6 : 20;, default = 20 . unsigned , default = 20
7: 0	R/W	0d0	reg_adp_vlti_os_margin : : margin for vlti overshoot, default = 0 . unsigned , default = 0

Table 10-1790 SRSHARP0_VCTI_FLT_CON_CLP 0x503f

Bit(s)	R/W	Default	Description
14	R/W	0d1	reg_adp_vcti_en : : enable bit of vlti, default = 1 . unsigned , default = 1
13:12	R/W	0d3	reg_adp_vcti_hxn_flt : : 0: no dn; 1: [1 2 1]/4; 2 : [1 2 2 2 1]/8 3:[1 0 2 0 1]/4, default = 3 . unsigned , default = 3
11:10	R/W	0d3	reg_adp_vcti_dxn_flt : : 0: no dn; 1: [1 2 1]/4; 2 : [1 2 2 2 1]/8 3:[1 0 2 0 1]/4, default = 3 . unsigned , default = 3
9: 8	R/W	0d3	reg_adp_vcti_han_flt : : 0: no dn; 1: [1 2 1]/4; 2 : [1 2 2 2 1]/8 3:[1 0 2 0 1]/4, default = 3 . unsigned , default = 3
7: 6	R/W	0d3	reg_adp_vcti_dan_flt : : 0: no dn; 1: [1 2 1]/4; 2 : [1 2 2 2 1]/8 3:[1 0 2 0 1]/4, default = 3 . unsigned , default = 3
5: 4	R/W	0d2	reg_adp_vcti_dx_mode : : 0:[-1 1] 1:[-1 0 -1]; 2/3: [-1 0 0 0 -1], default = 2 . unsigned , default = 2
2	R/W	0d1	reg_adp_vcti_con_lpf : : lpf mode of the con: 0: [1 2 1]/4; 1:[1 2 2 2 1]/8, default = 1 . unsigned , default = 1
0	R/W	0d1	reg_adp_vcti_hard_clp_win : : window size; 0: 1x3 window; 1: 1x5 window, default = 1 . unsigned , default = 1

Amlogic Proprietary and Confidential
Copyright © Amlogic. All rights reserved.

Table 10-1791 SRSHARP0_VCTI_BST_GAIN 0x5040

Bit(s)	R/W	Default	Description
23:16	R/W	0d0	reg_adp_vcti_bst_gain0 : : gain to boost filter [-1 2 -1];, default = 0 . unsigned , default = 0
15: 8	R/W	0d0	reg_adp_vcti_bst_gain1 : : gain to boost filter [-1 0 2 0 -1];, default = 0 . unsigned , default = 0
7: 0	R/W	0d0	reg_adp_vcti_bst_gain2 : : gain to boost filter usf, default = 0 . unsigned , default = 0

Table 10-1792 SRSHARP0_VCTI_BST_CORE 0x5041

Bit(s)	R/W	Default	Description
23:16	R/W	0d0	reg_adp_vcti_bst_core0 : : coring to boost filter [-1 2 -1];, default = 0 . unsigned , default = 0
15: 8	R/W	0d0	reg_adp_vcti_bst_core1 : : coring to boost filter [-1 0 2 0 -1];, default = 0 . unsigned , default = 0
7: 0	R/W	0d0	reg_adp_vcti_bst_core2 : : coring to boost filter usf, default = 0 . unsigned , default = 0

Table 10-1793 SRSHARP0_VCTI_CON_2_GAIN_0 0x5042

Bit(s)	R/W	Default	Description
31:24	R/W	0d25	reg_adp_vcti_con_2_gain0 : 25;, default = 25 . unsigned , default = 25
23:16	R/W	0d60	reg_adp_vcti_con_2_gain1 : 60;, default = 60 . unsigned , default = 60
15: 8	R/W	0d90	reg_adp_vcti_con_2_gain2 : 0;, default = 90 . unsigned , default = 90
7: 0	R/W	0d96	reg_adp_vcti_con_2_gain3 : 96;, default = 96 . unsigned , default = 96

Table 10-1794 SRSHARP0_VCTI_CON_2_GAIN_1 0x5043

Bit(s)	R/W	Default	Description
31:24	R/W	0d95	reg_adp_vcti_con_2_gain4 : 5;, default = 95 . unsigned , default = 95
23:16	R/W	0d80	reg_adp_vcti_con_2_gain5 : 80;, default = 80 . unsigned , default = 80
15: 8	R/W	0d20	reg_adp_vcti_con_2_gain6 : 20;, default = 20 . unsigned , default = 20
7: 0	R/W	0d0	reg_adp_vcti_os_margin : : margin for vcti overshoot, default = 0 . unsigned , default = 0

Table 10-1795 SRSHARP0_SHARP_3DLIMIT 0x5044

Bit(s)	R/W	Default	Description
28:16	R/W	0d0	reg_3d_mid_width : ,width of left part of 3d input, dft = half size of input width default = 0 . unsigned , default = 960
12: 0	R/W	0d0	reg_3d_mid_height : ,height of left part of 3d input, dft = half size of input height default = 0 . unsigned , default = 540

Amlogic Proprietary and Confidential
Copyright © Amlogic. All rights reserved.

Table 10-1796 SRSHARP0_DNLP_EN 0x5045

Bit(s)	R/W	Default	Description
15□8	R/W	0d0	reg_dnlp_hblank: . unsigned , default = 8
0	R/W	0d1	reg_dnlp_en : . unsigned , default = 1

Table 10-1797 SRSHARP0_DEMO_CRTL 0x5056

Bit(s)	R/W	Default	Description
18:17	R/W	0d2	demo_disp_position : . unsigned , default = 2
16	R/W	0d0	demo_hsvsharp_enable : . unsigned , default = 0
12: 0	R/W	0d360	demo_left_top_screen_width : : . unsigned , default = 360

Table 10-1798 SRSHARP0_SHARP_SR2_CTRL 0x5057

Bit(s)	R/W	Default	Description
24	R/W	0	reg_sr2_bic_pknr_bypass : bypass peaking/TI/Cubic
23:22	R/W		reserved
21:16	R/W	24	sr2_pk_la_err_dis_rate, low angle and high angle error should not be no less than nearby_error* rate/64
15: 8	R/W	16	sr2_pk_sad_diag_gain, gain to sad[2] and sad[6], 16 normalized to 1
7	R/W	0	sr2_vert_outphs, vertical output pixel phase, 0: 0 phase; 1: 1/2 phase
6	R/W	0	sr2_horz_outphs, horizontal output pixel phase, 0: 0 phase; 1: 1/2 phase
5	R/W	0	sr2_vert_ratio , vertical scale ratio, 0-> 1:1; 1-> 1:2
4	R/W	0	sr2_horz_ratio , horizontal scale ratio, 0-> 1:1; 1-> 1:2
3	R/W	1	sr2_ bic_norm , normalization of bicubical: 0: 128; 1: 64
2	R/W	0	sr2_ enable , 1 to enable super scaler
1	R/W	0	sr2_ sharp_prc_lr_hbic,
0	R/W	0	sr2_ sharp_prc_lr, 1: LTI/CTI/NR/Peaking processing using LR grid. 0: on HR grid; 1:on LR grid, horizontally no upscale, but using simple bic.

Table 10-1799 SRSHARP0_SHARP_SR2_YBIC_HCOEF0 0x5058

Bit(s)	R/W	Default	Description
31:24	R/W	0	sr2_y_bic_hcoeff03, signed
23:16	R/W	0	sr2_y_bic_hcoeff02, signed
15: 8	R/W	64	sr2_y_bic_hcoeff01, signed
7: 0	R/W	0	sr2_y_bic_hcoeff00, signed

Amlogic Proprietary and Confidential
Copyright © Amlogic. All rights reserved.

Table 10-1800 SRSHARP0_SHARP_SR2_YBIC_HCOEF1 0x5059

Bit(s)	R/W	Default	Description
31:24	R/W	-4	sr2_y_bic_hcoeff13 , signed
23:16	R/W	36	sr2_y_bic_hcoeff12 , signed
15: 8	R/W	36	sr2_y_bic_hcoeff11 , signed
7: 0	R/W	-4	sr2_y_bic_hcoeff10 , signed

Table 10-1801 SRSHARP0_SHARP_SR2_CBIC_HCOEF0 0x505a

Bit(s)	R/W	Default	Description
31:24	R/W	0	sr2_c_bic_hcoeff03 , signed
23:16	R/W	21	sr2_c_bic_hcoeff02 , signed
15: 8	R/W	22	sr2_c_bic_hcoeff01 , signed
7: 0	R/W	21	sr2_c_bic_hcoeff00 , signed

Table 10-1802 SRSHARP0_SHARP_SR2_CBIC_HCOEF1 0x505b

Bit(s)	R/W	Default	Description
31:24	R/W	-4	sr2_c_bic_hcoeff13 , signed
23:16	R/W	36	sr2_c_bic_hcoeff12 , signed
15: 8	R/W	36	sr2_c_bic_hcoeff11 , signed
7: 0	R/W	-4	sr2_c_bic_hcoeff10 , signed

Table 10-1803 SRSHARP0_SHARP_SR2_YBIC_VCOEF0 0x505c

Bit(s)	R/W	Default	Description
31:24	R/W	0	sr2_y_bic_vcoeff03 , signed
23:16	R/W	0	sr2_y_bic_vcoeff02 , signed
15: 8	R/W	64	sr2_y_bic_vcoeff01 , signed
7: 0	R/W	0	sr2_y_bic_vcoeff00 , signed

Table 10-1804 SRSHARP0_SHARP_SR2_YBIC_VCOEF1 0x505d

Bit(s)	R/W	Default	Description
31:24	R/W	-4	sr2_y_bic_vcoeff13 , signed
23:16	R/W	36	sr2_y_bic_vcoeff12 , signed
15: 8	R/W	36	sr2_y_bic_vcoeff11 , signed
7: 0	R/W	-4	sr2_y_bic_vcoeff10 , signed

Amlogic Proprietary and Confidential
Copyright © Amlogic. All rights reserved.

Table 10-1805 SRSHARP0_SHARP_SR2_CBIC_VCOEF0 0x505e

Bit(s)	R/W	Default	Description
31:24	R/W	0	sr2_c_bic_vcoeff03 , signed
23:16	R/W	21	sr2_c_bic_vcoeff02 , signed
15: 8	R/W	22	sr2_c_bic_vcoeff01 , signed
7: 0	R/W	21	sr2_c_bic_vcoeff00 , signed

Table 10-1806 SRSHARP0_SHARP_SR2_CBIC_VCOEF1 0x505f

Bit(s)	R/W	Default	Description
31:24	R/W	-4	sr2_c_bic_vcoeff13 , signed
23:16	R/W	36	sr2_c_bic_vcoeff12 , signed
15: 8	R/W	36	sr2_c_bic_vcoeff11 , signed
7: 0	R/W	-4	sr2_c_bic_vcoeff10 , signed

Table 10-1807 SRSHARP0_SHARP_SR2_MISC 0x5060

Bit(s)	R/W	Default	Description
31:2	R/W		reserved
1	R/W	0	sr2_cmpmux_bef , 0 : no swap for YUV/RGB; 1: swap for YUV/RGB, YUV/RGB->UVY/GBR
0	R/W	0	sr2_cmpmux_aft , 0 : no swap for YUV/RGB; 1: swap for YUV/RGB, UVY/GBR->YUV/RGB

Table 10-1808 SRSHARP0_SR3_SAD_CTRL 0x5061

Bit(s)	R/W	Default	Description
31:30	R/W		reserved
29:24	R/W	0d6	reg_sr3_pk_sad_core_rate : rate of coring.
23:22	R/W		reserved
21:16	R/W	0d6	reg_sr3_lti_sad_core_rate : rate of coring.
15:14	R/W		reserved
13:8	R/W	0d6	reg_sr3_cti_sad_core_rate : rate of coring.
7	R/W	0d1	reg_sr3_lti_hsad_mode: mode for hsad of lti calculation, 0:block based; 1: other sharp
6	R/W	0d1	reg_sr3_cti_hsad_mode: mode for hsad of cti calculation, 0:block based; 1: other sharp
5	R/W	0d1	reg_sr3_lti_dsad_mode: mode for dsad of lti calculation, 0:block based; 1: other sharp
4	R/W	0d1	reg_sr3_cti_dsad_mode: mode for dsad of cti calculation, 0:block based; 1: other sharp
3	R/W	0d1	reg_sr3_lti_vsad_mode: mode for vsad of lti calculation, 0:block based; 1: other sharp

Amlogic Proprietary and Confidential
Copyright © Amlogic. All rights reserved.

Bit(s)	R/W	Default	Description
2	R/W	0d1	reg_sr3_cti_vsad_mode: mode for vsad of cti calculation, 0:block based; 1: other sharp
1	R/W	0d1	reg_sr3_lti_hsad_hlpf: hlpf for hsad of lti calculation, 0:no hlpf; 1: with [1 2 1] hlpf.
0	R/W	0d1	reg_sr3_cti_hsad_hlpf: hlpf for hsad of cti calculation, 0:no hlpf; 1: with [1 2 1] hlpf.

Table 10-1809 SRSHARP0_SR3_PK_CTRL0 0x5062

Bit(s)	R/W	Default	Description
31:12	R/W		reserved
11	R/W	0d1	reg_sr3_pk_sad_mode: mode for sad of peaking calculation, 0: block based; 1: other sharp.
10	R/W	0d1	reg_sr3_pk_hsad_hlpf: hlpf for hsad for peaking calculation,0:no hlpf; 1: with [1 2 2 2 1] hlpf.
9	R/W	0d1	reg_sr3_pk_vsad_hlpf: hlpf for vsad for peaking calculation,0:no hlpf; 1: with [1 2 2 2 1] hlpf.
8	R/W	0d1	reg_sr3_pk_dsad_hlpf: hlpf for dsad for peaking calculation,0:no hlpf; 1: with [1 2 2 2 1] hlpf.
7:6	R/W	0d3	reg_sr3_pk_hpdrt_mode: mode for HPdrt filter
5:4	R/W	0d3	reg_sr3_pk_bpdrt_mode: mode for BPdrt filter
3:2	R/W	0d3	reg_pk_drtbld_range: range of the min2 and min direction distance
1	R/W		reserved
0	R/W	0d0	reg_sr3_pk_ti_blend_mode: blend mode of the TI and PK result

Table 10-1810 SRSHARP0_SR3_PK_CTRL1 0x5063

Bit(s)	R/W	Default	Description
31	R/W		reserved
30:28	R/W	0d1	reg_sr3_pk_Hp_hvcon_replace8_maxsad: replace HP hvcon by maxsad
26:24	R/W	0d1	reg_sr3_pk_bp_hvcon_replace8_maxsad: replace BP hvcon by maxsad
23:16	R/W	0d32	reg_sr3_pk_hp_hvcon_replace8lv_gain: gain to local variant before calculating the hv gain for peaking.
15:8	R/W	0d32	reg_sr3_pk_bp_hvcon_replace8lv_gain: gain to local variant before calculating the hv gain for peaking.
7	R/W	0d1	reg_sr3_sad_intlev_mode: interleave detect xerr mode: 0 max; 1: sum
6	R/W	0d1	reg_sr3_sad_intlev_mode1: mode 1 of using diagonal protection: 1: with diagonal protection
5:0	R/W	0d12	reg_sr3_sad_intlev_gain: interleave detection for sad gain applied, normalized to 8 as 1

Amlogic Proprietary and Confidential
Copyright © Amlogic. All rights reserved.

Table 10-1811 SRSHARP0_DEJ_CTRL 0x5064

Bit(s)	R/W	Default	Description
15:8	R/W	8	reg_sr3_dejaggy_hblank
7:4	R/W		reserved
3:2	R/W	0d3	reg_sr3_dejaggy_sameside_prtct: enable of sr3 dejaggy same side curve protect from filter, [0] for proc path; [1] for ctrl path.
1	R/W	0d1	reg_sr3_dejaggy_sameside_mode: mode of sameside flag decision
0	R/W	0d1	reg_sr3_dejaggy_enable: enable of sr3 dejaggy

Table 10-1812 SRSHARP0_DEJ_ALPHA 0x5065

Bit(s)	R/W	Default	Description
31:28	R/W	0d0	reg_sr3_dejaggy_ctrlchrm_alpha_1 : alpha for LR video LPF
27:24	R/W	0d15	reg_sr3_dejaggy_ctrlchrm_alpha_0 : alpha for LR video LPF
23:20	R/W	0d0	reg_sr3_dejaggy_ctrlluma_alpha_1 : alpha for LR video LPF
19:16	R/W	0d15	reg_sr3_dejaggy_ctrlluma_alpha_0 : alpha for LR video LPF
15:12	R/W	0d4	reg_sr3_dejaggy_procchrm_alpha_1: alpha for LR video LPF
11:8	R/W	0d6	reg_sr3_dejaggy_procchrm_alpha_0: alpha for LR video LPF
7:4	R/W	0d4	reg_sr3_dejaggy_procluma_alpha_1: alpha for LR video LPF
3:0	R/W	0d6	reg_sr3_dejaggy_procluma_alpha_0: alpha for LR video LPF

Table 10-1813 SRSHARP0_SR3_DRTLPF_EN 0x5066

Bit(s)	R/W	Default	Description
31:15	R/W		reserved
14:8	R/W	0d0	reg_pk_debug_edge
6:4	R/W	0d0	reg_sr3_drtlpf_theta_en
2:0	R/W	0d7	reg_sr3_drtlpf_enable: directional lpf on Y/U/V channels

Table 10-1814 SRSHARP0_SR3_DRTLPF_ALPHA_0 0x5067

Bit(s)	R/W	Default	Description
31:28	R/W		reserved
27:24	R/W	0d9	reg_sr3_drtlpf_alpha_3
23:20	R/W		reserved
19:16	R/W	0d10	reg_sr3_drtlpf_alpha_2
15:12	R/W		reserved
11:8	R/W	0d11	reg_sr3_drtlpf_alpha_1
7:4	R/W		reserved
3:0	R/W	0d12	reg_sr3_drtlpf_alpha_0: directional lpf alpha coef for min_sad/max_sad compare

Amlogic Proprietary and Confidential
Copyright © Amlogic. All rights reserved.

Table 10-1815 SRSHARP0_SR3_DRTLPF_ALPHA_1 0x5068

Bit(s)	R/W	Default	Description
31:28	R/W		reserved
27:24	R/W	0d1	reg_sr3_drtlpf_alpha_7
23:20	R/W		reserved
19:16	R/W	0d4	reg_sr3_drtlpf_alpha_6
15:12	R/W		reserved
11:8	R/W	0d7	reg_sr3_drtlpf_alpha_5
7:4	R/W		reserved
3:0	R/W	0d8	reg_sr3_drtlpf_alpha_4: directional lpf alpha coef for min_sad/max_sad compare

Table 10-1816 SRSHARP0_SR3_DRTLPF_ALPHA_2 0x5069

Bit(s)	R/W	Default	Description
31:28	R/W		reserved
27:24	R/W	0d0	reg_sr3_drtlpf_alpha_11
23:20	R/W		reserved
19:16	R/W	0d0	reg_sr3_drtlpf_alpha_10
15:12	R/W		reserved
11:8	R/W	0d0	reg_sr3_drtlpf_alpha_9
7:4	R/W		reserved
3:0	R/W	0d0	reg_sr3_drtlpf_alpha_8: directional lpf alpha coef for min_sad/max_sad compare

Table 10-1817 SRSHARP0_SR3_DRTLPF_ALPHA_OFST 0x506a

Bit(s)	R/W	Default	Description
31:28	R/W	0	reg_sr3_drtlpf_alpha_ofst7
27:24	R/W	0	reg_sr3_drtlpf_alpha_ofst6
23:20	R/W	0	reg_sr3_drtlpf_alpha_ofst5
19:16	R/W	-2	reg_sr3_drtlpf_alpha_ofst4
15:12	R/W	0	reg_sr3_drtlpf_alpha_ofst3
11:8	R/W	0	reg_sr3_drtlpf_alpha_ofst2
7:4	R/W	0	reg_sr3_drtlpf_alpha_ofst1
3:0	R/W	-2	reg_sr3_drtlpf_alpha_ofst0: directional lpf alpha coef offset of each direction.

Amlogic Proprietary and Confidential
Copyright © Amlogic. All rights reserved.

Table 10-1818 SRSHARP0_SR3_DERING_CTRL 0x506b

Bit(s)	R/W	Default	Description
31	R/W		reserved
30:28	R/W	1	reg_sr3_dering_enable: dering enable
27	R/W		reserved
26:24	R/W	3	reg_sr3_dering_varlpf_mode: local variant LPF mode. 0: no filter; 1: errosion 3x3; 2: 3x3 lpf; 3: 3x3 errosion + lpf
23:20	R/W	9	reg_sr3_dering_maxrange: range of dering in LR resolution.
19:18	R/W		reserved
17:16	R/W	2	reg_sr3_dering_lcvar_blend_mode: mode for lcvar calculation. 0:HV blend; 1:diag blend; 2:HV blend + V; 3: HV blend+Diag blend
15:8	R/W	40	reg_sr3_dering_lcvar_gain: gain to local variant and normalized to 32 as 1
7:0	R/W	28	reg_sr3_dering_lcvar_nearby_maxsad_th: threshold to use near side maxsad if that side is larger than this threshold, otherwise use the max one.

Table 10-1819 SRSHARP0_SR3_DERING_LUMA2PKGAIN_0TO3 0x506c

Bit(s)	R/W	Default	Description
31:24	R/W	255	reg_sr3_dering_luma2pkgain3: level limit(for th0<bpcon<th1) of curve for dering pkgain base on LPF luma level
23:16	R/W	255	reg_sr3_dering_luma2pkgain2: level limit(for bpcon<th0) of curve for dering pkgain base on LPF luma level
15:8	R/W	200	reg_sr3_dering_luma2pkgain1: threshold 1 of curve for dering pkgain based on LPF luma level.
7:0	R/W	30	reg_sr3_dering_luma2pkgain0: threshold 0 of curve for dering pkgain based on LPF luma level.

Table 10-1820 SRSHARP0_SR3_DERING_LUMA2PKGAIN_4TO6 0x506d

Bit(s)	R/W	Default	Description
31:24	R/W		reserved
23:16	R/W	24	reg_sr3_dering_luma2pkgain6: rate1 (for bpcon>th1) of curve for dering pkOS based on LPF luma level.
15:8	R/W	50	reg_sr3_dering_luma2pkgain5: rate0 (for bpcon<th0) of curve for dering pkOS based on LPF luma level.
7:0	R/W	255	reg_sr3_dering_luma2pkgain4: level limit(for bpcon>th1) of curve for dering pkgain base on LPF luma level

Table 10-1821 SRSHARP0_SR3_DERING_LUMA2PKOS_0TO3 0x506e

Bit(s)	R/W	Default	Description
31:24	R/W	255	reg_sr3_dering_luma2pkos3: level limit(for th0<bpcon<th1) of curve for dering pkOS base on LPF luma level
23:16	R/W	255	reg_sr3_dering_luma2pkos2: level limit(for bpcon<th0) of curve for dering pkOS base on LPF luma level

Amlogic Proprietary and Confidential
Copyright © Amlogic. All rights reserved.

Bit(s)	R/W	Default	Description
15:8	R/W	200	reg_sr3_dering_luma2pkos1: threshold 1 of curve for dering pkOS based on LPF luma level.
7:0	R/W	30	reg_sr3_dering_luma2pkos0: threshold 0 of curve for dering pkOS based on LPF luma level.

Table 10-1822 SRSHARP0_SR3_DERING_LUMA2PKOS_4TO6 0x506f

Bit(s)	R/W	Default	Description
31:24	R/W		reserved
23:16	R/W	24	reg_sr3_dering_luma2pkos6: rate1 (for bpcon>th1) of curve for dering pkOS based on LPF luma level.
15:8	R/W	50	reg_sr3_dering_luma2pkos5: rate0 (for bpcon<th0) of curve for dering pkOS based on LPF luma level.
7:0	R/W	255	reg_sr3_dering_luma2pkos4: level limit(for bpcon>th1) of curve for dering pkOS base on LPF luma level

Table 10-1823 SRSHARP0_SR3_DERING_GAINVS_MADSAD 0x5070

Bit(s)	R/W	Default	Description
31:28	R/W	0	reg_sr3_dering_gainvs_maxsad7
27:24	R/W	0	reg_sr3_dering_gainvs_maxsad6
23:20	R/W	0	reg_sr3_dering_gainvs_maxsad5
19:16	R/W	0	reg_sr3_dering_gainvs_maxsad4
15:12	R/W	0	reg_sr3_dering_gainvs_maxsad3
11:8	R/W	0	reg_sr3_dering_gainvs_maxsad2
7:4	R/W	4	reg_sr3_dering_gainvs_maxsad1
3:0	R/W	8	reg_sr3_dering_gainvs_maxsad0: pkgain vs maxsad value, 8 node interpolations.

Table 10-1824 SRSHARP0_SR3_DERING_GAINVS_VR2MAX 0x5071

Bit(s)	R/W	Default	Description
31:28	R/W	15	reg_sr3_dering_gainvs_vr2max7
27:24	R/W	15	reg_sr3_dering_gainvs_vr2max6
23:20	R/W	15	reg_sr3_dering_gainvs_vr2max5
19:16	R/W	15	reg_sr3_dering_gainvs_vr2max4
15:12	R/W	14	reg_sr3_dering_gainvs_vr2max3
11:8	R/W	12	reg_sr3_dering_gainvs_vr2max2
7:4	R/W	2	reg_sr3_dering_gainvs_vr2max1
3:0	R/W	0	reg_sr3_dering_gainvs_vr2max0: pkgain vs ratio

Amlogic Proprietary and Confidential
Copyright © Amlogic. All rights reserved.

Table 10-1825 SRSHARP0_SR3_DERING_PARAM0 0x5072

Bit(s)	R/W	Default	Description
31:24	R/W		reserved
23:16	R/W	10	reg_sr3_dering_lcvar_floor
15:8	R/W	32	reg_sr3_dering_vr2max_gain: gain to max before feeding to LUT
7:6	R/W		reserved
5:0	R/W	16	reg_sr3_dering_vr2max_limt: limit of maxsad

Table 10-1826 SRSHARP0_SR3_DRTLPF_THETA 0x5073

Bit(s)	R/W	Default	Description
31:0	R/W	0xfe-c96420	reg_sr3_drtlpf_theta: u4x8 directional lpf beta coef for min_sad/min2_sad compared to x=0:7 correspond to [1:8]/16; 0 means no drtLPF, 15: 100% alpha dependant drtLPF.

Table 10-1827 SRSHARP0_SATPRT_CTRL 0x5074

Bit(s)	R/W	Default	Description
31:28	R/W		reserved
27:16	R/W	5	reg_satprt_sat_core: 4x will be coring to cor(irgb_max-irgb_min) to calculate the oy_delt, the smaller the more protection to color, the larger only the rich color will be protected.
15:8	R/W	64	reg_satprt_sat_rate: rate to cor(irgb_max-irgb_min) to calculate the oy_delt,the larger the more protection to color; norm 16 as 1
7:4	R/W		reserved
3:2	R/W	1	reg_satprt_csc_mode: CSC mode of current yuv input: 0:601; 1:709; 2:BT2020 NCL; 3 reserved
1	R/W	1	reg_satprt_is_lmt: flag telling the YUV is limited range data or full rang data; 1 is limited data
0	R/W	0	reg_satprt_enable: 1 to enable of saturation protection for dnlp adjustments

Table 10-1828 SRSHARP0_SATPRT_DIVM 0x5075

Bit(s)	R/W	Default	Description
31:24	R/W		reserved
23:0	R/W	{128,128,128}	reg_satprt_div_m: u8x3, 1/m, normalized to 128 as 1.

Table 10-1829 SRSHARP0_DB_FLT_CTRL 0x5077

Bit(s)	R/W	Default	Description
26	R/W	0	reg_nrdeband_reset1 : // unsigned , default = 0 0 : no reset seed 1: reload chroma seed
25	R/W	0	reg_nrdeband_reset0 : // unsigned , default = 0 0 : no reset seed 1: reload luma seed

Amlogic Proprietary and Confidential
Copyright © Amlogic. All rights reserved.

Bit(s)	R/W	Default	Description
24	R/W	0	reg_nrdeband_rgb : // unsigned , default = 0 0 : yuv 1: RGB
23	R/W	1	reg_nrdeband_en11 : // unsigned , default = 1 debanding registers of side lines, [0] for luma, same for below
22	R/W	1	reg_nrdeband_en10 : // unsigned , default = 1 debanding registers of side lines, [1] for chroma, same for below
21	R/W	1	reg_nrdeband_siderand : // unsigned , default = 1 options to use side two lines use the rand, instead of use for the YUV three component of middle line, 0: seed [3]/bandrand[3] for middle line yuv; 1: seed[3]/bandrand[3] for nearby three lines Y;
20	R/W	0	reg_nrdeband_randmode : // unsigned , default = 0 mode of rand noise adding, 0: same noise strength for all difs; else: strenght of noise will not exceed the difs, MIN((pPKReg->reg_nrdeband_bandrand[m]), noise[m])
19:17	R/W	6	reg_nrdeband_bandrand2 : // unsigned , default = 6
15:13	R/W	6	reg_nrdeband_bandrand1 : // unsigned , default = 6
11: 9	R/W	6	reg_nrdeband_bandrand0 : // unsigned , default = 6
7	R/W	1	reg_nrdeband_hpxor1 : // unsigned , default = 1 debanding random hp portion xor, [0] for luma
6	R/W	1	reg_nrdeband_hpxor0 : // unsigned , default = 1 debanding random hp portion xor, [1] for chroma
5	R/W	1	reg_nrdeband_en1 : // unsigned , default = 1 debanding registers, for luma
4	R/W	1	reg_nrdeband_en0 : // unsigned , default = 1 debanding registers, for chroma
3: 2	R/W	2	reg_nrdeband_lpf_mode1 : // unsigned , default = 2 lpf mode, 0: 3x3, 1:3x5; 2: 5x5; 3:5x7
1: 0	R/W	2	reg_nrdeband_lpf_mode0 : // unsigned , default = 2 lpf mode, 0: 3x3, 1:3x5; 2: 5x5; 3:5x7

Table 10-1830 SRSHARP0_DB_FLT_RANDLUT 0x5079

Bit(s)	R/W	Default	Description
23:21	R/W	1	reg_nrdeband_randslut7 : // unsigned , default = 1 lut0
20:18	R/W	1	reg_nrdeband_randslut6 : // unsigned , default = 1 lut0
17:15	R/W	1	reg_nrdeband_randslut5 : // unsigned , default = 1 lut0
14:12	R/W	1	reg_nrdeband_randslut4 : // unsigned , default = 1 lut0
11: 9	R/W	1	reg_nrdeband_randslut3 : // unsigned , default = 1 lut0
8: 6	R/W	1	reg_nrdeband_randslut2 : // unsigned , default = 1 lut0
5: 3	R/W	1	reg_nrdeband_randslut1 : // unsigned , default = 1 lut0
2: 0	R/W	1	reg_nrdeband_randslut0 : // unsigned , default = 1 lut0

Amlogic Proprietary and Confidential
Copyright © Amlogic. All rights reserved.

Table 10-1831 SRSHARP0_DB_FLT_PXI_THRD 0x507a

Bit(s)	R/W	Default	Description
25:16	R/W	0	reg_nrdeband_yc_th1 : // unsigned , default = 0 to luma/|u/v| for using the denoise
9: 0	R/W	0	reg_nrdeband_yc_th0 : // unsigned , default = 0 to luma/|u/v| for using the denoise

Table 10-1832 SRSHARP0_DB_FLT_SEED_Y 0x507b

Bit(s)	R/W	Default	Description
31: 0	R/W	162143-8240	reg_nrdeband_seed0 : // unsigned , default = 1621438240 noise adding seed for Y. seed[0]= 0x60a52f20; as default

Table 10-1833 SRSHARP0_DB_FLT_SEED_U 0x507c

Bit(s)	R/W	Default	Description
31: 0	R/W	162143-8247	reg_nrdeband_seed1 : // unsigned , default = 1621438247 noise adding seed for U. seed[0]= 0x60a52f27; as default

Table 10-1834 SRSHARP0_DB_FLT_SEED_V 0x507d

Bit(s)	R/W	Default	Description
31: 0	R/W	162143-8242	reg_nrdeband_seed2 : // unsigned , default = 1621438242 noise adding seed for V. seed[0]= 0x60a52f22; as default

Table 10-1835 SRSHARP0_PKGAIN_VSLUMA_LUT_L 0x507e

Bit(s)	R/W	Default	Description
31:28	R/W	5	reg_pkgain_vsluma_lut7
27:24	R/W	6	reg_pkgain_vsluma_lut6
23:20	R/W	6	reg_pkgain_vsluma_lut5
19:16	R/W	6	reg_pkgain_vsluma_lut4
15:12	R/W	7	reg_pkgain_vsluma_lut3
11:8	R/W	10	reg_pkgain_vsluma_lut2
7:4	R/W	12	reg_pkgain_vsluma_lut1
3:0	R/W	8	reg_pkgain_vsluma_lut0

Table 10-1836 SRSHARP0_PKGAIN_VSLUMA_LUT_H 0x507f

Bit(s)	R/W	Default	Description
31:4	R/W		reserved
3:0	R/W	4	reg_pkgain_vsluma_lut8

Amlogic Proprietary and Confidential
Copyright © Amlogic. All rights reserved.

Table 10-1837 SRSHARP0_PKOSHT_VSLUMA_LUT_L 0x5080

Bit(s)	R/W	Default	Description
31:28	R/W	5	reg_pkosht_vsluma_lut7
27:24	R/W	6	reg_pkosht_vsluma_lut6
23:20	R/W	6	reg_pkosht_vsluma_lut5
19:16	R/W	6	reg_pkosht_vsluma_lut4
15:12	R/W	7	reg_pkosht_vsluma_lut3
11:8	R/W	10	reg_pkosht_vsluma_lut2
7:4	R/W	12	reg_pkosht_vsluma_lut1
3:0	R/W	8	reg_pkosht_vsluma_lut0

Table 10-1838 SRSHARP0_PKOSHT_VSLUMA_LUT_H 0x5081

Bit(s)	R/W	Default	Description
31:4	R/W		reserved
3:0	R/W	4	reg_pkosht_vsluma_lut8

Table 10-1839 SRSHARP0_SATPRT_LMT_RGB1 0x5082

Bit(s)	R/W	Default	Description
27:16	R/W	0d0	reg_satprt_lmt_g:
11: 0	R/W	0d0	reg_satprt_lmt_r: limit of RGB channel, for limited range RGB, 12bits

Table 10-1840 SRSHARP0_SATPRT_LMT_RGB2 0x5083

Bit(s)	R/W	Default	Description
31:16	R/W	0d0	reserved
11: 0	R/W	0d0	reg_satprt_lmt_b: limit of RGB channel, for limited range RGB

Table 10-1841 SRSHARP0_SHARP_GATE_CLK_CTRL_0 0x5084

Bit(s)	R/W	Default	Description
31:0	R/W	0d0	Gate clock control [01:00]: sharp input control unit [03:02]: deband unit [05:04]: dejaggy unit [07:06]: dnlp unit [09:08]: demo control unit [11:10]: horiz interp unit

Amlogic Proprietary and Confidential
Copyright © Amlogic. All rights reserved.

Table 10-1842 SRSHARP0_SHARP_GATE_CLK_CTRL_1 0x5085

Bit(s)	R/W	Default	Description
31:0	R/W	0d0	Gate clock control [01:00]: sr_top “pipe_ctrl” [03:02]: drt [05:04]: ssd [07:06]: cubic [09:08]: edi [11:10]: pkgainsad [13:12]: bicomux [15:14]: bicin_fifo [17:16]: lpf4pkgain_fifo [19:18]: min2hvgain_fifo [21:20]: sad4pkgain_fifo [23:22]: dirminmax4xtl_fifo [25:24]: drtsad8_fifo [27:26]: ssdmax_fifo [29:28]: pkminmax_fifo [31:30]: cirdrtgain_fifo

Table 10-1843 SRSHARP0_SHARP_GATE_CLK_CTRL_2 0x5086

Bit(s)	R/W	Default	Description
31:0	R/W	0d0	Gate clock control [01:00]: bufdiff_fifo [03:02]: osvar_fifo [05:04]: pkhvgain unit [07:06]: pkgain unit [09:08]: TI unit [11:10]: pk unit [13:12]: locvar unit [15:14]: hvconc unit

Table 10-1844 SRSHARP0_SHARP_GATE_CLK_CTRL_3 0x5087

Bit(s)	R/W	Default	Description
31:0	R/W	0d0	Gate clock control [01:00]: TI, htl Y [03:02]: TI, vti Y [05:04]: TI, htl U [07:06]: TI, vtl U [09:08]: TI, htl V [11:10]: TI, vtl V [13:12]: TI, lumaminmax_fifo [15:14]: TI, chrmminmax fifo

Amlogic Proprietary and Confidential
Copyright © Amlogic. All rights reserved.

Table 10-1845 SRSHARP0_SHARP_DPS_CTRL 0x5088

Bit(s)	R/W	Default	Description
31:0	R/W	0d0	Power saving control : hvcon : nrssd : os filter : cubic 5 lines to 9 lines : dering : locvar : drtlpf : hlti : hcti : vlti : vcti : lti blend : cti blend : htishort (no used) : nr Y filter : nr C filter : nr belnd : pkti blend : os ctrl : pk HP : pk BP [26:24] dejaggy power saving control [30:28] reserved

Table 10-1846 SRSHARP0_DNLP_00 0x5090

Bit(s)	R/W	Default	Description
31: 0	R/W	0x0010-0008	reg_dnlp_ygrid0 : : dnlp00 . unsigned , default = 32'h00100008

Table 10-1847 SRSHARP0_DNLP_01 0x5091

Bit(s)	R/W	Default	Description
31: 0	R/W	0x0020-0018	reg_dnlp_ygrid1 : : dnlp01 . unsigned , default = 32'h00200018

Table 10-1848 SRSHARP0_DNLP_02 0x5092

Bit(s)	R/W	Default	Description
31: 0	R/W	0x0030-0028	reg_dnlp_ygrid2 : : dnlp02 . unsigned , default = 32'h00300028

Table 10-1849 SRSHARP0_DNLP_03 0x5093

Bit(s)	R/W	Default	Description
31: 0	R/W	0x0040-0038	reg_dnlp_ygrid3 : : dnlp03 . unsigned , default = 32'h00400038

Amlogic Proprietary and Confidential
Copyright © Amlogic. All rights reserved.

Table 10-1850 SRSHARP0_DNLP_04 0x5094

Bit(s)	R/W	Default	Description
31: 0	R/W	0x0050-0048	reg_dnlp_ygrid4 : : dnlp04 . unsigned , default = 32'h00500048

Table 10-1851 SRSHARP0_DNLP_05 0x5095

Bit(s)	R/W	Default	Description
31: 0	R/W	0x0068-005c	reg_dnlp_ygrid5 : : dnlp05 . unsigned , default = 32'h0068005c

Table 10-1852 SRSHARP0_DNLP_06 0x5096

Bit(s)	R/W	Default	Description
31: 0	R/W	0x0080-0074	reg_dnlp_ygrid6 : : dnlp06 . unsigned , default = 32'h00800074

Table 10-1853 SRSHARP0_DNLP_07 0x5097

Bit(s)	R/W	Default	Description
31: 0	R/W	0x00-a00090	reg_dnlp_ygrid7 : : dnlp07 . unsigned , default = 32'h00a00090

Table 10-1854 SRSHARP0_DNLP_08 0x5098

Bit(s)	R/W	Default	Description
31: 0	R/W	0x00-c000b0	reg_dnlp_ygrid8 : : dnlp08 . unsigned , default = 32'h00c000b0

Table 10-1855 SRSHARP0_DNLP_09 0x5099

Bit(s)	R/W	Default	Description
31: 0	R/W	0x00-e000d0	reg_dnlp_ygrid9 : : dnlp09 . unsigned , default = 32'h00e000d0

Table 10-1856 SRSHARP0_DNLP_10 0x509a

Bit(s)	R/W	Default	Description
31: 0	R/W	0x0100-00f0	reg_dnlp_ygrid10 : : dnlp10 . unsigned , default = 32'h010000f0

Table 10-1857 SRSHARP0_DNLP_11 0x509b

Bit(s)	R/W	Default	Description
31: 0	R/W	0x012-c0114	reg_dnlp_ygrid11 : : dnlp11 . unsigned , default = 32'h012c0114

Amlogic Proprietary and Confidential
Copyright © Amlogic. All rights reserved.

Table 10-1858 SRSHARP0_DNLP_12 0x509c

Bit(s)	R/W	Default	Description
31: 0	R/W	0x0154-0140	reg_dnlp_ygrid12 : : dnlp12 . unsigned , default = 32'h01540140

Table 10-1859 SRSHARP0_DNLP_13 0x509d

Bit(s)	R/W	Default	Description
31: 0	R/W	0x0180-016c	reg_dnlp_ygrid13 : : dnlp13 . unsigned , default = 32'h0180016c

Table 10-1860 SRSHARP0_DNLP_14 0x509e

Bit(s)	R/W	Default	Description
31: 0	R/W	0x01-c001a0	reg_dnlp_ygrid14 : : dnlp14 . unsigned , default = 32'h01c001a0

Table 10-1861 SRSHARP0_DNLP_15 0x509f

Bit(s)	R/W	Default	Description
31: 0	R/W	0x0200-01e0	reg_dnlp_ygrid15 : : dnlp15 . unsigned , default = 32'h020001e0

Table 10-1862 SRSHARP0_DNLP_16 0x50a0

Bit(s)	R/W	Default	Description
31: 0	R/W	0x0240-0220	reg_dnlp_ygrid16 : : dnlp16 . unsigned , default = 32'h02400220

Table 10-1863 SRSHARP0_DNLP_17 0x50a1

Bit(s)	R/W	Default	Description
31: 0	R/W	0x0280-0260	reg_dnlp_ygrid17 : : dnlp17 . unsigned , default = 32'h02800260

Table 10-1864 SRSHARP0_DNLP_18 0x50a2

Bit(s)	R/W	Default	Description
31: 0	R/W	0x02-b00298	reg_dnlp_ygrid18 : : dnlp18 . unsigned , default = 32'h02b00298

Table 10-1865 SRSHARP0_DNLP_19 0x50a3

Bit(s)	R/W	Default	Description
31: 0	R/W	0x02-e002c8	reg_dnlp_ygrid19 : : dnlp19 . unsigned , default = 32'h02e002c8

Amlogic Proprietary and Confidential
Copyright © Amlogic. All rights reserved.

Table 10-1866 SRSHARP0_DNLP_20 0x50a4

Bit(s)	R/W	Default	Description
31: 0	R/W	0x0300-02f0	reg_dnlp_ygrid20 : : dnlp20 . unsigned , default = 32'h030002f0

Table 10-1867 SRSHARP0_DNLP_21 0x50a5

Bit(s)	R/W	Default	Description
31: 0	R/W	0x0320-0310	reg_dnlp_ygrid21 : : dnlp21 . unsigned , default = 32'h03200310

Table 10-1868 SRSHARP0_DNLP_22 0x50a6

Bit(s)	R/W	Default	Description
31: 0	R/W	0x0338-032c	reg_dnlp_ygrid22 : : dnlp22 . unsigned , default = 32'h0338032c

Table 10-1869 SRSHARP0_DNLP_23 0x50a7

Bit(s)	R/W	Default	Description
31: 0	R/W	0x0350-0348	reg_dnlp_ygrid23 : : dnlp23 . unsigned , default = 32'h03500348

Table 10-1870 SRSHARP0_DNLP_24 0x50a8

Bit(s)	R/W	Default	Description
31: 0	R/W	0x035-c0358	reg_dnlp_ygrid24 : : dnlp24 . unsigned , default = 32'h035c0358

Table 10-1871 SRSHARP0_DNLP_25 0x50a9

Bit(s)	R/W	Default	Description
31: 0	R/W	0x0368-0360	reg_dnlp_ygrid25 : : dnlp25 . unsigned , default = 32'h03680360

Table 10-1872 SRSHARP0_DNLP_26 0x50aa

Bit(s)	R/W	Default	Description
31: 0	R/W	0x0378-0370	reg_dnlp_ygrid26 : : dnlp26 . unsigned , default = 32'h03780370

Table 10-1873 SRSHARP0_DNLP_27 0x50ab

Bit(s)	R/W	Default	Description
31: 0	R/W	0x0388-0380	reg_dnlp_ygrid27 : : dnlp27 . unsigned , default = 32'h03880380

Amlogic Proprietary and Confidential
Copyright © Amlogic. All rights reserved.

Table 10-1874 SRSHARP0_DNLP_28 0x50ac

Bit(s)	R/W	Default	Description
31: 0	R/W	0x03-a00390	reg_dnlp_ygrid28 : : dnlp28 . unsigned , default = 32'h03a00390

Table 10-1875 SRSHARP0_DNLP_29 0x50ad

Bit(s)	R/W	Default	Description
31: 0	R/W	0x03-c003b0	reg_dnlp_ygrid29 : : dnlp29 . unsigned , default = 32'h03c003b0

Table 10-1876 SRSHARP0_DNLP_30 0x50ae

Bit(s)	R/W	Default	Description
31: 0	R/W	0x03-e003d0	reg_dnlp_ygrid30 : : dnlp30 . unsigned , default = 32'h03e003d0

Table 10-1877 SRSHARP0_DNLP_31 0x50af

Bit(s)	R/W	Default	Description
31: 0	R/W	0x03f-c03f0	reg_dnlp_ygrid31 : : dnlp31 . unsigned , default = 32'h03fc03f0

Table 10-1878 SRSHARP0_SHARP_SYNC_CTRL 0x50b0

Bit(s)	R/W	Default	Description
15:0	R/W	0d0	Shadow control for some setting: 0 to use VSYNC to shadow : SR all bypass : reg_sr2_bic_pknr_bypass [2] : reg_3d_mode [3] : reg_nrdeband_en11 [4]: reg_nrdeband_en10 [5]: reg_nrdeband_en1 [6]: reg_nrdeband_en0 [7]: reg_dejaggy_enable [8]: reg_sr2_sharp_prc_lr [9]: reg_sharp_pk_en [10]:reg_sharp_nr_en [11]:reg_adp_hlti_en [12]:reg_adp_hcti_en [13]:reg_adp_vlti_en [14]:reg_adp_vcti_en [15]:reg_dnlp_en

Table 10-1879 SRSHARP0_NR_GAU_YH_COEF02 0x50b2

Bit(s)	R/W	Default	Description
29:20	R/W	0d32	luma's horizontal adaptive coef0 . signed , default = 32
19:10	R/W	0d32	luma's horizontal adaptive coef1 . signed , default = 32
9:0	R/W	0d16	luma's horizontal adaptive coef2 . signed , default = 16

Amlogic Proprietary and Confidential
Copyright © Amlogic. All rights reserved.

Table 10-1880 SRSHARP0_NR_GAU_YH_COEF34 0x50b3

Bit(s)	R/W	Default	Description
19:10	R/W	0d0	luma's horizontal adaptive coef3 . signed , default = 0
9:0	R/W	0d0	luma's horizontal adaptive coef4 . signed , default = 0

Table 10-1881 SRSHARP0_NR_GAU_YV_COEF1 0x50b4

Bit(s)	R/W	Default	Description
29:20	R/W	0d32	luma's vertical adaptive coef0 . signed , default = 32
19:10	R/W	0d32	luma's vertical adaptive coef1 . signed , default = 32
9:0	R/W	0d16	luma's vertical adaptive coef2 . signed , default = 16

Table 10-1882 SRSHARP0_NR_GAU_CH_COEF02 0x50b5

Bit(s)	R/W	Default	Description
29:20	R/W	0d32	chroma's horizontal adaptive coef0 . signed , default = 32
19:10	R/W	0d32	chroma's horizontal adaptive coef1 . signed , default = 32
9:0	R/W	0d16	chroma's horizontal adaptive coef2 . signed , default = 16

Table 10-1883 SRSHARP0_NR_GAU_CH_COEF34 0x50b6

Bit(s)	R/W	Default	Description
19:10	R/W	0d0	chroma's horizontal adaptive coef3 . signed , default = 0
9:0	R/W	0d0	chroma's horizontal adaptive coef4 . signed , default = 0

Table 10-1884 SRSHARP0_NR_GAU_CV_COEF1 0x50b7

Bit(s)	R/W	Default	Description
29:20	R/W	0d32	chroma's vertical adaptive coef0 . signed , default = 32
19:10	R/W	0d32	chroma's vertical adaptive coef1 . signed , default = 32
9:0	R/W	0d16	chroma's vertical adaptive coef2 . signed , default = 16

Table 10-1885 SRSHARP0_DB_FLT_CTRL1 0x50b8

Bit(s)	R/W	Default	Description
17:16	R/W	0d2	reg_nrdeband_noise_rs .unsigned , default = 2
15:12	R/W	0d8	reg_nrdeband_randgain .unsigned , default = 8

Amlogic Proprietary and Confidential
Copyright © Amlogic. All rights reserved.

Table 10-1886 SRSHARP0_DB_FLT_LUMA_THRD 0x50b9

Bit(s)	R/W	Default	Description
29:24	R/W	36	reg_nrdeband_luma_th3 : // unsigned , default = 36 threshold to |Y-Ylpf|, if < th[0] use lpf
21:16	R/W	28	reg_nrdeband_luma_th2 : // unsigned , default = 28 elseif <th[1] use (lpf*3 + y)/4
13:8	R/W	24	reg_nrdeband_luma_th1 : // unsigned , default = 24 elseif <th[1] use (lpf*3 + y)/4elseif <th[2] (lpf*1 + y)/2
5:0	R/W	20	reg_nrdeband_luma_th0 : // unsigned , default = 20 elseif <th[1] use (lpf*3 + y)/4elseif elseif <th[3] (lpf*1 + 3*y)/4; else

Table 10-1887 SRSHARP0_DB_FLT_CHRM_THRD 0x50ba

Bit(s)	R/W	Default	Description
29:24	R/W	36	reg_nrdeband_chrm_th3 : // unsigned , default = 36 threshold to |Y-Ylpf|, if < th[0] use lpf
21:16	R/W	28	reg_nrdeband_chrm_th2 : // unsigned , default = 28 elseif <th[1] use (lpf*3 + y)/4
13:8	R/W	24	reg_nrdeband_chrm_th1 : // unsigned , default = 24 elseif <th[1] use (lpf*3 + y)/4elseif <th[2] (lpf*1 + y)/2
5:0	R/W	20	reg_nrdeband_chrm_th0 : // unsigned , default = 20 elseif <th[1] use (lpf*3 + y)/4elseif elseif <th[3] (lpf*1 + 3*y)/4; else

Table 10-1888 SRSHARP0_FMETER_CTRL 0x5089

Bit(s)	R/W	Default	Description
11:10	R/W	0	reg_fmeter_vwin_mm : vertical window size, 0:1 cloumn,1:3cloumn, 2or3:5clo-umn.unsigned,default = 0
9:8	R/W	0	reg_fmeter_hwin_mm : horizontal window size, 0:1x7, 1:1x9, 2or3: 1x11 .un-signed , default = 0
7	R/W	0	reg_fmeter_d2_mode : selectino filter D2, 0: [0 -2 0 0 2], 1: [-2 0 0 0 2] .unsigned , default = 0
6	R/W	0	reg_fmeter_v2_mode : selection filter V2, 0: [0 -2 0 0 2], 1: [-2 0 0 0 2] .unsigned , default = 0
5:4	R/W	0	reg_fmeter_h2_mode: selection filter H2, 0: [0 0 0 -2 0 0 2 0 0], 1: [-2 0 0 0 2], 2or3: [0-2 0 0 0 0 0 2 0] .unsigned , default = 0
0	R/W	0	reg_freq_meter_en: freq meter enable .unsigned , default = 0

Table 10-1889 SRSHARP0_FMETER_WIN_HOR 0x508a

Bit(s)	R/W	Default	Description
28:16	R/W	1920	reg_fmeter_xwin_ed: window location: hend .unsigned , default = 1920
12:0	R/W	0	reg_fmeter_xwin_st: window location: hstart .unsigned , default = 0

Amlogic Proprietary and Confidential
Copyright © Amlogic. All rights reserved.

Table 10-1890 SRSHARP0_FMETER_WIN_VER 0x508b

Bit(s)	R/W	Default	Description
28:16	R/W	1080	reg_fmeter_ywin_ed: window location: vend .unsigned , default = 1080
12:0	R/W	0	reg_fmeter_ywin_st: window location: vstart .unsigned , default = 0

Table 10-1891 SRSHARP0_FMETER_CORING 0x508c

Bit(s)	R/W	Default	Description
31:24	R/W	4	reg_fmeter_low_bound: low bound for threshold .unsigned , default = 4
23:16	R/W	4	reg_fmeter_coring_d: coring of diff before compare with threshold for diagonal frequency .unsigned , default = 4
15:8	R/W	4	reg_fmeter_coring_v: coring of diff before compare with threshold for vertical frequency .unsigned , default = 4
7:0	R/W	4	reg_fmeter_coring_h: coring of diff before compare with threshold for horizontal frequency .unsigned , default = 4

Table 10-1892 SRSHARP0_FMETER_RATIO_H 0x508d

Bit(s)	R/W	Default	Description
21:16	R/W	16	reg_fmeter_ratio_h2: ratio for threshold calc. for horizontal frequency, 16 is normalized as "1" .unsigned , default = 16
13:8	R/W	16	reg_fmeter_ratio_h1: ratio for threshold calc. for horizontal frequency, 16 is normalized as "1" .unsigned , default = 16
5:0	R/W	16	reg_fmeter_ratio_h0: ratio for threshold calc. for horizontal frequency, 16 is normalized as "1" .unsigned , default = 16

Table 10-1893 SRSHARP0_FMETER_RATIO_V 0x508e

Bit(s)	R/W	Default	Description
21:16	R/W	16	reg_fmeter_ratio_v2: ratio for threshold calc. for vertical frequency, 16 is normalized as "1" .unsigned , default = 16
13:8	R/W	16	reg_fmeter_ratio_v1: ratio for threshold calc. for vertical frequency, 16 is normalized as "1" .unsigned , default = 16
5:0	R/W	16	reg_fmeter_ratio_v0: ratio for threshold calc. for vertical frequency, 16 is normalized as "1" .unsigned , default = 16

Table 10-1894 SRSHARP0_FMETER_RATIO_D 0x508f

Bit(s)	R/W	Default	Description
21:16	R/W	16	reg_fmeter_ratio_d2: ratio for threshold calc. for diagonal frequency, 16 is normalized as "1" .unsigned , default = 16
13:8	R/W	16	reg_fmeter_ratio_d1: ratio for threshold calc. for diagonal frequency, 16 is normalized as "1" .unsigned , default = 16
5:0	R/W	16	reg_fmeter_ratio_d0: ratio for threshold calc. for diagonal frequency, 16 is normalized as "1" .unsigned , default = 16

Amlogic Proprietary and Confidential
Copyright © Amlogic. All rights reserved.

Table 10-1895 SRSHARP0_RO_FMETER_HCNT_TYPE0 0x5046

Bit(s)	R/W	Default	Description
31:0	RO	0	ro_fmeter_hcnt_type0: count for horizontal frequency

Table 10-1896 SRSHARP0_RO_FMETER_HCNT_TYPE1 0x5047

Bit(s)	R/W	Default	Description
31:0	RO	0	ro_fmeter_hcnt_type1: count for horizontal frequency

Table 10-1897 SRSHARP0_RO_FMETER_HCNT_TYPE2 0x5048

Bit(s)	R/W	Default	Description
31:0	RO	0	ro_fmeter_hcnt_type2: count for horizontal frequency

Table 10-1898 SRSHARP0_RO_FMETER_HCNT_TYPE3 0x5049

Bit(s)	R/W	Default	Description
31:0	RO	0	ro_fmeter_hcnt_type3: count for horizontal frequency

Table 10-1899 SRSHARP0_RO_FMETER_VCNT_TYPE0 0x504a

Bit(s)	R/W	Default	Description
31:0	RO	0	ro_fmeter_vcnt_type0: count for vertical frequency

Table 10-1900 SRSHARP0_RO_FMETER_VCNT_TYPE1 0x504b

Bit(s)	R/W	Default	Description
31:0	RO	0	ro_fmeter_vcnt_type1: count for vertical frequency

Table 10-1901 SRSHARP0_RO_FMETER_VCNT_TYPE2 0x504c

Bit(s)	R/W	Default	Description
31:0	RO	0	ro_fmeter_vcnt_type2: count for vertical frequency

Table 10-1902 SRSHARP0_RO_FMETER_VCNT_TYPE3 0x504d

Bit(s)	R/W	Default	Description
31:0	RO	0	ro_fmeter_vcnt_type3: count for vertical frequency

Table 10-1903 SRSHARP0_RO_FMETER_PDCNT_TYPE0 0x504e

Bit(s)	R/W	Default	Description
31:0	RO	0	ro_fmeter_pdcnt_type0: count for positive diagonal frequency

Amlogic Proprietary and Confidential
Copyright © Amlogic. All rights reserved.

Table 10-1904 SRSHARP0_RO_FMETER_PDCNT_TYPE1 0x504f

Bit(s)	R/W	Default	Description
31:0	RO	0	ro_fmeter_pdcnt_type1: count for positive diagonal frequency

Table 10-1905 SRSHARP0_RO_FMETER_PDCNT_TYPE2 0x5050

Bit(s)	R/W	Default	Description
31:0	RO	0	ro_fmeter_pdcnt_type2: count for positive diagonal frequency

Table 10-1906 SRSHARP0_RO_FMETER_PDCNT_TYPE3 0x5051

Bit(s)	R/W	Default	Description
31:0	RO	0	ro_fmeter_pdcnt_type3: count for positive diagonal frequency

Table 10-1907 SRSHARP0_RO_FMETER_NDCNT_TYPE0 0x5052

Bit(s)	R/W	Default	Description
31:0	RO	0	ro_fmeter_ndcnt_type0: count for negitive diagonal frequency

Table 10-1908 SRSHARP0_RO_FMETER_NDCNT_TYPE1 0x5053

Bit(s)	R/W	Default	Description
31:0	RO	0	ro_fmeter_ndcnt_type1: count for negitive diagonal frequency

Table 10-1909 SRSHARP0_RO_FMETER_NDCNT_TYPE2 0x5054

Bit(s)	R/W	Default	Description
31:0	RO	0	ro_fmeter_ndcnt_type2: count for negitive diagonal frequency

Table 10-1910 SRSHARP0_RO_FMETER_NDCNT_TYPE3 0x5055

Bit(s)	R/W	Default	Description
31:0	RO	0	ro_fmeter_ndcnt_type3: count for negitive diagonal frequency

Table 10-1911 SRSHARP0_SR7_DRTLPF_EN 0x5100

Bit(s)	R/W	Default	Description
31:11			reserved
10	RW	0	reg_sr7_drtlpf_beta_en2: enable of direction ambiguity protection for drt_lpf, beta for drt filter coef base on the x=cal_drt_dif8(min_idx,min2_idx)
9	RW	0	reg_sr7_drtlpf_beta_en1: enable of direction ambiguity protection for drt_lpf, beta for drt filter coef base on the x=cal_drt_dif8(min_idx,min2_idx)

Amlogic Proprietary and Confidential
Copyright © Amlogic. All rights reserved.

Bit(s)	R/W	Default	Description
8	RW	0	reg_sr7_drtlpf_beta_en0: enable of direction ambiguity protection for drt_lpf, beta for drt filter coef base on the x=cal_drt_dif8(min_idx,min2_idx)
7:6			reserved
5	RW	0	reg_sr7_drtlpf_edge_en2: enable of direction lpf based on edge strength
4	RW	0	reg_sr7_drtlpf_edge_en1: enable of direction lpf based on edge strength
3	RW	0	reg_sr7_drtlpf_edge_en0: enable of direction lpf based on edge strength
2	RW	1	reg_sr7_drtlpf_sdfd_en2: sdfd gamma (HF burst compare to real edge protection) enable
1	RW	1	reg_sr7_drtlpf_sdfd_en1: sdfd gamma (HF burst compare to real edge protection) enable.
0	RW	1	reg_sr7_drtlpf_sdfd_en0: sdfd gamma (HF burst compare to real edge protection) enable.

Table 10-1912 SRSHARP0_SR7_DRTLPF_BETA 0x5101

Bit(s)	R/W	Default	Description
31:16			reserved
15:12	RW	0	reg_sr7_drtlpf_beta3: beta for drt filter coef base on the x=cal_drt_dif8(min_idx, min2_idx)
11:8	RW	4	reg_sr7_drtlpf_beta2: beta for drt filter coef base on the x=cal_drt_dif8(min_idx, min2_idx)
7:4	RW	8	reg_sr7_drtlpf_beta1: beta for drt filter coef base on the x=cal_drt_dif8(min_idx, min2_idx)
3:0	RW	15	reg_sr7_drtlpf_beta0: beta for drt filter coef base on the x=cal_drt_dif8(min_idx, min2_idx), beta = lut[x-1], the larger of x, means the higher possibility for ambiguilty, beta=0 use org wo lpf.

Table 10-1913 SRSHARP0_SR7_PKBLD_BETA 0x5102

Bit(s)	R/W	Default	Description
31:16			reserved
15:12	RW	0	reg_sr7_pkdrtbld_beta3: beta for drt and cir blend base on the x=cal_drt_dif8 (min_idx,min2_idx)
11:8	RW	4	reg_sr7_pkdrtbld_beta2: beta for drt and cir blend base on the x=cal_drt_dif8 (min_idx,min2_idx)
7:4	RW	8	reg_sr7_pkdrtbld_beta1: beta for drt and cir blend base on the x=cal_drt_dif8 (min_idx,min2_idx)
3:0	RW	15	reg_sr7_pkdrtbld_beta0: beta for drt and cir blend base on the x=cal_drt_dif8 (min_idx,min2_idx), beta = lut[x-1], the larger of x, means the higher possibility for ambiguilty, beta=0 use org wo lpf.

Amlogic Proprietary and Confidential
Copyright © Amlogic. All rights reserved.

Table 10-1914 SRSHARP0_SR7_XLTIBLD_BETA 0x5103

Bit(s)	R/W	Default	Description
31:16			reserved
15:12	RW	0	reg_sr7_xlti_dcbld_beta3: beta for denoise and org dc blend base on the x=cal_drt_dif8(min_idx,min2_idx)
11:8	RW	4	reg_sr7_xlti_dcbld_beta2: beta for denoise and org dc blend base on the x=cal_drt_dif8(min_idx,min2_idx)
7:4	RW	8	reg_sr7_xlti_dcbld_beta1: beta for denoise and org dc blend base on the x=cal_drt_dif8(min_idx,min2_idx)
3:0	RW	15	reg_sr7_xlti_dcbld_beta0: beta for denoise and org dc blend base on the x=cal_drt_dif8(min_idx,min2_idx) beta = lut[x-1], the larger of x, means the higher possibility for ambiguilty, beta=0 use org wo lpf.

Table 10-1915 SRSHARP0_SR7_DRTLPF_EDGE0 0x5104

Bit(s)	R/W	Default	Description
31:28	RW	15	reg_sr7_drtlpf_edge7: edge lamda for drt lpf base on max_sad [0:16:128~255]
27:24	RW	15	reg_sr7_drtlpf_edge6: edge lamda for drt lpf base on max_sad [0:16:128~255]
23:20	RW	15	reg_sr7_drtlpf_edge5: edge lamda for drt lpf base on max_sad [0:16:128~255]
19:16	RW	15	reg_sr7_drtlpf_edge4: edge lamda for drt lpf base on max_sad [0:16:128~255]
15:12	RW	15	reg_sr7_drtlpf_edge3: edge lamda for drt lpf base on max_sad [0:16:128~255]
11:8	RW	15	reg_sr7_drtlpf_edge2: edge lamda for drt lpf base on max_sad [0:16:128~255]
7:4	RW	15	reg_sr7_drtlpf_edge1: edge lamda for drt lpf base on max_sad [0:16:128~255]
3:0	RW	15	reg_sr7_drtlpf_edge0: edge lamda for drt lpf base on max_sad [0:16:128~255]

Table 10-1916 SRSHARP0_SR7_DRTLPF_EDGE1 0x5105

Bit(s)	R/W	Default	Description
31:28	RW	15	reg_sr7_drtlpf_edge15: edge lamda for drt lpf base on max_sad [0:16:128~255]
27:24	RW	15	reg_sr7_drtlpf_edge14: edge lamda for drt lpf base on max_sad [0:16:128~255]
23:20	RW	15	reg_sr7_drtlpf_edge13: edge lamda for drt lpf base on max_sad [0:16:128~255]
19:16	RW	15	reg_sr7_drtlpf_edge12: edge lamda for drt lpf base on max_sad [0:16:128~255]
15:12	RW	15	reg_sr7_drtlpf_edge11: edge lamda for drt lpf base on max_sad [0:16:128~255]
11:8	RW	15	reg_sr7_drtlpf_edge10: edge lamda for drt lpf base on max_sad [0:16:128~255]
7:4	RW	15	reg_sr7_drtlpf_edge9: edge lamda for drt lpf base on max_sad [0:16:128~255]
3:0	RW	15	reg_sr7_drtlpf_edge8: edge lamda for drt lpf base on max_sad [0:16:128~255]

Amlogic Proprietary and Confidential
Copyright © Amlogic. All rights reserved.

Table 10-1917 SRSHARP0_SR7_DRTLPF_SDCOR0 0x5106

Bit(s)	R/W	Default	Description
31:28	RW	15	reg_sr7_drtlpf_sdcor7: gamma for drt lpf base on SD'[0:16:128~255]
27:24	RW	15	reg_sr7_drtlpf_sdcor6: gamma for drt lpf base on SD'[0:16:128~255]
23:20	RW	15	reg_sr7_drtlpf_sdcor5: gamma for drt lpf base on SD'[0:16:128~255]
19:16	RW	15	reg_sr7_drtlpf_sdcor4: gamma for drt lpf base on SD'[0:16:128~255]
15:12	RW	15	reg_sr7_drtlpf_sdcor3: gamma for drt lpf base on SD'[0:16:128~255]
11:8	RW	15	reg_sr7_drtlpf_sdcor2: gamma for drt lpf base on SD'[0:16:128~255]
7:4	RW	15	reg_sr7_drtlpf_sdcor1: gamma for drt lpf base on SD'[0:16:128~255]
3:0	RW	15	reg_sr7_drtlpf_sdcor0: gamma for drt lpf base on SD'[0:16:128~255]

Table 10-1918 SRSHARP0_SR7_DRTLPF_SDCOR1 0x5107

Bit(s)	R/W	Default	Description
31:28	RW	15	reg_sr7_drtlpf_sdcor15: gamma for drt lpf base on SD'[0:16:128~255]
27:24	RW	15	reg_sr7_drtlpf_sdcor14: gamma for drt lpf base on SD'[0:16:128~255]
23:20	RW	15	reg_sr7_drtlpf_sdcor13: gamma for drt lpf base on SD'[0:16:128~255]
19:16	RW	15	reg_sr7_drtlpf_sdcor12: gamma for drt lpf base on SD'[0:16:128~255]
15:12	RW	15	reg_sr7_drtlpf_sdcor11: gamma for drt lpf base on SD'[0:16:128~255]
11:8	RW	15	reg_sr7_drtlpf_sdcor10: gamma for drt lpf base on SD'[0:16:128~255]
7:4	RW	15	reg_sr7_drtlpf_sdcor9: gamma for drt lpf base on SD'[0:16:128~255]
3:0	RW	15	reg_sr7_drtlpf_sdcor8: gamma for drt lpf base on SD'[0:16:128~255]

Table 10-1919 SRSHARP0_SR7_CTIGAIN_SDCOR0 0x5108

Bit(s)	R/W	Default	Description
31:28	RW	15	reg_sr7_ctigain_sdcor7: adaptive gamma for cti boost gain base on SD'[0:16:128~255]
27:24	RW	15	reg_sr7_ctigain_sdcor6: adaptive gamma for cti boost gain base on SD'[0:16:128~255]
23:20	RW	15	reg_sr7_ctigain_sdcor5: adaptive gamma for cti boost gain base on SD'[0:16:128~255]
19:16	RW	15	reg_sr7_ctigain_sdcor4: adaptive gamma for cti boost gain base on SD'[0:16:128~255]
15:12	RW	15	reg_sr7_ctigain_sdcor3: adaptive gamma for cti boost gain base on SD'[0:16:128~255]
11:8	RW	15	reg_sr7_ctigain_sdcor2: adaptive gamma for cti boost gain base on SD'[0:16:128~255]
7:4	RW	15	reg_sr7_ctigain_sdcor1: adaptive gamma for cti boost gain base on SD'[0:16:128~255]
3:0	RW	15	reg_sr7_ctigain_sdcor0: adaptive gamma for cti boost gain base on SD'[0:16:128~255]

Amlogic Proprietary and Confidential
Copyright © Amlogic. All rights reserved.

Table 10-1920 SRSHARP0_SR7_CTIGAIN_SDCOR1 0x5109

Bit(s)	R/W	Default	Description
31:28	RW	15	reg_sr7_ctigain_sdcor15: adaptive gamma for cti boost gain base on SD'[0:16:128~255]
27:24	RW	15	reg_sr7_ctigain_sdcor14: adaptive gamma for cti boost gain base on SD'[0:16:128~255]
23:20	RW	15	reg_sr7_ctigain_sdcor13: adaptive gamma for cti boost gain base on SD'[0:16:128~255]
19:16	RW	15	reg_sr7_ctigain_sdcor12: adaptive gamma for cti boost gain base on SD'[0:16:128~255]
15:12	RW	15	reg_sr7_ctigain_sdcor11: adaptive gamma for cti boost gain base on SD'[0:16:128~255]
11:8	RW	15	reg_sr7_ctigain_sdcor10: adaptive gamma for cti boost gain base on SD'[0:16:128~255]
7:4	RW	15	reg_sr7_ctigain_sdcor9: adaptive gamma for cti boost gain base on SD'[0:16:128~255]
3:0	RW	15	reg_sr7_ctigain_sdcor8: adaptive gamma for cti boost gain base on SD'[0:16:128~255]

Table 10-1921 SRSHARP0_SR7_LTIGAIN_SDCOR0 0x510a

Bit(s)	R/W	Default	Description
31:28	RW	15	reg_sr7_ltigain_sdcor7: adaptive gamma for lti boost gain base on SD'[0:16:128~255]
27:24	RW	15	reg_sr7_ltigain_sdcor6: adaptive gamma for lti boost gain base on SD'[0:16:128~255]
23:20	RW	15	reg_sr7_ltigain_sdcor5: adaptive gamma for lti boost gain base on SD'[0:16:128~255]
19:16	RW	15	reg_sr7_ltigain_sdcor4: adaptive gamma for lti boost gain base on SD'[0:16:128~255]
15:12	RW	15	reg_sr7_ltigain_sdcor3: adaptive gamma for lti boost gain base on SD'[0:16:128~255]
11:8	RW	15	reg_sr7_ltigain_sdcor2: adaptive gamma for lti boost gain base on SD'[0:16:128~255]
7:4	RW	15	reg_sr7_ltigain_sdcor1: adaptive gamma for lti boost gain base on SD'[0:16:128~255]
3:0	RW	15	reg_sr7_ltigain_sdcor0: adaptive gamma for lti boost gain base on SD'[0:16:128~255]

Table 10-1922 SRSHARP0_SR7_LTIGAIN_SDCOR1 0x510b

Bit(s)	R/W	Default	Description
31:28	RW	15	reg_sr7_ltigain_sdcor15: adaptive gamma for lti boost gain base on SD'[0:16:128~255]
27:24	RW	15	reg_sr7_ltigain_sdcor14: adaptive gamma for lti boost gain base on SD'[0:16:128~255]

Amlogic Proprietary and Confidential
Copyright © Amlogic. All rights reserved.

Bit(s)	R/W	Default	Description
23:20	RW	15	reg_sr7_ltigain_sdcor13: adaptive gamma for lti boost gain base on SD'[0:16:128~255]
19:16	RW	15	reg_sr7_ltigain_sdcor12: adaptive gamma for lti boost gain base on SD'[0:16:128~255]
15:12	RW	15	reg_sr7_ltigain_sdcor11: adaptive gamma for lti boost gain base on SD'[0:16:128~255]
11:8	RW	15	reg_sr7_ltigain_sdcor10: adaptive gamma for lti boost gain base on SD'[0:16:128~255]
7:4	RW	15	reg_sr7_ltigain_sdcor9: adaptive gamma for lti boost gain base on SD'[0:16:128~255]
3:0	RW	15	reg_sr7_ltigain_sdcor8: adaptive gamma for lti boost gain base on SD'[0:16:128~255]

Table 10-1923 SRSHARP0_SR7_HLTIBPF_TAP0 0x510c

Bit(s)	R/W	Default	Description
31:24	RW	0	reg_sr7_hlti_bpf_tap153: tap15 BPF for hlti (gain3), only store half of the filter normalized to 256 as 1.0,signed
23:16	RW	-34	reg_sr7_hlti_bpf_tap152: tap15 BPF for hlti (gain3), only store half of the filter normalized to 256 as 1.0,signed
15:8	RW	-1	reg_sr7_hlti_bpf_tap151: tap15 BPF for hlti (gain3), only store half of the filter normalized to 256 as 1.0, signed
7:0	RW	120	reg_sr7_hlti_bpf_tap150: tap15 BPF for hlti (gain3), only store half of the filter normalized to 256 as 1.0,signed

Table 10-1924 SRSHARP0_SR7_HLTIBPF_TAP1 0x510d

Bit(s)	R/W	Default	Description
31:24	RW	2	reg_sr7_hlti_bpf_tap157: tap15 BPF for hlti (gain3), only store half of the filter normalized to 256 as 1.0,signed
23:16	RW	-7	reg_sr7_hlti_bpf_tap156: tap15 BPF for hlti (gain3), only store half of the filter normalized to 256 as 1.0,signed
15:8	RW	1	reg_sr7_hlti_bpf_tap155: tap15 BPF for hlti (gain3), only store half of the filter normalized to 256 as 1.0,signed
7:0	RW	-21	reg_sr7_hlti_bpf_tap154: tap15 BPF for hlti (gain3), only store half of the filter normalized to 256 as 1.0,signed

Table 10-1925 SRSHARP0_SR7_HCTIBPF_TAP0 0x510e

Bit(s)	R/W	Default	Description
31:24	RW	0	reg_sr7_clti_bpf_tap153: tap15 BPF for clti (gain3), only store half of the filter normalized to 256 as 1.0,signed
23:16	RW	-34	reg_sr7_clti_bpf_tap152: tap15 BPF for clti (gain3), only store half of the filter normalized to 256 as 1.0,signed

Amlogic Proprietary and Confidential
Copyright © Amlogic. All rights reserved.

Bit(s)	R/W	Default	Description
15:8	RW	-1	reg_sr7_clti_bpf_tap151: tap15 BPF for clti (gain3), only store half of the filter normalized to 256 as 1.0,signed
7:0	RW	120	reg_sr7_clti_bpf_tap150: tap15 BPF for clti (gain3), only store half of the filter normalized to 256 as 1.0,signed

Table 10-1926 SRSHARP0_SR7_HCTIBPF_TAP1 0x510f

Bit(s)	R/W	Default	Description
31:24	RW	2	reg_sr7_clti_bpf_tap157: tap15 BPF for clti (gain3), only store half of the filter normalized to 256 as 1.0,signed
23:16	RW	-7	reg_sr7_clti_bpf_tap156: tap15 BPF for clti (gain3), only store half of the filter normalized to 256 as 1.0,signed
15:8	RW	1	reg_sr7_clti_bpf_tap155: tap15 BPF for clti (gain3), only store half of the filter normalized to 256 as 1.0,signed
7:0	RW	-21	reg_sr7_clti_bpf_tap154: tap15 BPF for clti (gain3), only store half of the filter normalized to 256 as 1.0,signed

Table 10-1927 SRSHARP0_SR7_PKLONGBPF_HTAP0 0x5110

Bit(s)	R/W	Default	Description
31:24	RW	-24	reg_sr7_pk_long_bpf_hztap153: tap15 BPF for horizontal peaking filter, only store half of the filter,signed
23:16	RW	-19	reg_sr7_pk_long_bpf_hztap152: tap15 BPF for horizontal peaking filter, only store half of the filter,signed
15:8	RW	31	reg_sr7_pk_long_bpf_hztap151: tap15 BPF for horizontal peaking filter, only store half of the filter,signed
7:0	RW	66	reg_sr7_pk_long_bpf_hztap150: tap15 BPF for horizontal peaking filter, only store half of the filter ,signed

Table 10-1928 SRSHARP0_SR7_PKLONGBPF_HTAP1 0x5111

Bit(s)	R/W	Default	Description
31:24	RW	-6	reg_sr7_pk_long_bpf_hztap157: tap15 BPF for horizontal peaking filter, only store half of the filter,signed
23:16	RW	-10	reg_sr7_pk_long_bpf_hztap156: tap15 BPF for horizontal peaking filter, only store half of the filter,signed
15:8	RW	-1	reg_sr7_pk_long_bpf_hztap155: tap15 BPF for horizontal peaking filter, only store half of the filter,signed
7:0	RW	-4	reg_sr7_pk_long_bpf_hztap154: tap15 BPF for horizontal peaking filter, only store half of the filter,signed

Amlogic Proprietary and Confidential
Copyright © Amlogic. All rights reserved.

Table 10-1929 SRSHARP0_SR7_PKLONGHPF_HTAP0 0x5112

Bit(s)	R/W	Default	Description
31:24	RW	27	reg_sr7_pk_long_hpf_hztap153: tap15 HPF for horizontal peaking filter, only store half of the filter,signed
23:16	RW	-15	reg_sr7_pk_long_hpf_hztap152: tap15 HPF for horizontal peaking filter, only store half of the filter,signed
15:8	RW	-32	reg_sr7_pk_long_hpf_hztap151: tap15 HPF for horizontal peaking filter, only store half of the filter,signed
7:0	RW	58	reg_sr7_pk_long_hpf_hztap150: tap15 HPF for horizontal peaking filter, only store half of the filter,signed

Table 10-1930 SRSHARP0_SR7_PKLONGHPF_HTAP1 0x5113

Bit(s)	R/W	Default	Description
31:24	RW	8	reg_sr7_pk_long_hpf_hztap157: tap15 HPF for horizontal peaking filter, only store half of the filter,signed
23:16	RW	-6	reg_sr7_pk_long_hpf_hztap156: tap15 HPF for horizontal peaking filter, only store half of the filter,signed
15:8	RW	-1	reg_sr7_pk_long_hpf_hztap155: tap15 HPF for horizontal peaking filter, only store half of the filter,signed
7:0	RW	-10	reg_sr7_pk_long_hpf_hztap154: tap15 HPF for horizontal peaking filter, only store half of the filter,signed

Table 10-1931 SRSHARP0_SR7_VLTIBPF_TAP0 0x5114

Bit(s)	R/W	Default	Description
31:24	RW	0	reg_sr7_vlti_bpf_tap093: tap09 BPF for vlti (gain3), only store half of the filter, signed
23:16	RW	-41	reg_sr7_vlti_bpf_tap092: tap09 BPF for vlti (gain3), only store half of the filter, signed
15:8	RW	0	reg_sr7_vlti_bpf_tap091: tap09 BPF for vlti (gain3), only store half of the filter, signed
7:0	RW	126	reg_sr7_vlti_bpf_tap090: tap09 BPF for vlti (gain3), only store half of the filter, signed

Table 10-1932 SRSHARP0_SR7_VLTIBPF_TAP1 0x5115

Bit(s)	R/W	Default	Description
31:8			reserved
7:0	RW	-22	reg_sr7_vlti_bpf_tap094: tap09 BPF for vlti (gain3), only store half of the filter, signed

Amlogic Proprietary and Confidential
Copyright © Amlogic. All rights reserved.

Table 10-1933 SRSHARP0_SR7_VCTIBPF_TAP0 0x5116

Bit(s)	R/W	Default	Description
31:24	RW	0	reg_sr7_vcti_bpf_tap093: tap09 BPF for vcti (gain3), only store half of the filter, signed
23:16	RW	-41	reg_sr7_vcti_bpf_tap092: tap09 BPF for vcti (gain3), only store half of the filter, signed
15:8	RW	0	reg_sr7_vcti_bpf_tap091: tap09 BPF for vcti (gain3), only store half of the filter, signed
7:0	RW	126	reg_sr7_vcti_bpf_tap090: tap09 BPF for vcti (gain3), only store half of the filter, signed

Table 10-1934 SRSHARP0_SR7_VCTIBPF_TAP1 0x5117

Bit(s)	R/W	Default	Description
31:8			reserved
7:0	RW	-22	reg_sr7_vcti_bpf_tap094: tap09 BPF for vcti (gain3), only store half of the filter,, signed

Table 10-1935 SRSHARP0_SR7_PKLONGBPF_VTAP0 0x5118

Bit(s)	R/W	Default	Description
31:24	RW	-32	reg_sr7_pk_long_bpf_vdtap093: tap09 BPF for vertical and diagonal peaking filter,signed
23:16	RW	-28	reg_sr7_pk_long_bpf_vdtap092: tap09 BPF for vertical and diagonal peaking filter,signed
15:8	RW	30	reg_sr7_pk_long_bpf_vdtap091: tap09 BPF for vertical and diagonal peaking filter,signed
7:0	RW	68	reg_sr7_pk_long_bpf_vdtap090: tap09 BPF for vertical and diagonal peaking filter,signed

Table 10-1936 SRSHARP0_SR7_PKLONGBPF_VTAP1 0x5119

Bit(s)	R/W	Default	Description
31:8			reserved
7:0	RW	-4	reg_sr7_pk_long_bpf_vdtap094: tap09 BPF for vertical and diagonal peaking filter,signed

Table 10-1937 SRSHARP0_SR7_PKLONGHPF_VTAP0 0x511a

Bit(s)	R/W	Default	Description
31:24	RW	30	reg_sr7_pk_long_hpf_vdtap093: tap09 HPF for vertical and diagonal peaking filter,signed
23:16	RW	-28	reg_sr7_pk_long_hpf_vdtap092: tap09 HPF for vertical and diagonal peaking filter,signed

Amlogic Proprietary and Confidential
Copyright © Amlogic. All rights reserved.

Bit(s)	R/W	Default	Description
15:8	RW	-31	reg_sr7_pk_long_hpf_vdtap091: tap09 HPF for vertical and diagonal peaking filter,signed
7:0	RW	68	reg_sr7_pk_long_hpf_vdtap090: tap09 HPF for vertical and diagonal peaking filter,signed

Table 10-1938 SRSHARP0_SR7_PKLONGHPF_VTAP1 0x511b

Bit(s)	R/W	Default	Description
31:8			reserved
7:0	RW	-5	reg_sr7_pk_long_hpf_vdtap094: tap09 HPF for vertical and diagonal peaking filter,signed

Table 10-1939 SRSHARP0_SR7_CIRBPLONG_ALP 0x511c

Bit(s)	R/W	Default	Description
31:16			reserved
15:12	RW	15	reg_sr7_cirbp_long_alpha3: alpha to blend bp_long to the cirpk filter corresponding angle (0/45/90/135)
11:8	RW	15	reg_sr7_cirbp_long_alpha2: alpha to blend bp_long to the cirpk filter corresponding angle (0/45/90/135)
7:4	RW	15	reg_sr7_cirbp_long_alpha1: alpha to blend bp_long to the cirpk filter corresponding angle (0/45/90/135)
3:0	RW	15	reg_sr7_cirbp_long_alpha0: alpha to blend bp_long to the cirpk filter corresponding angle (0/45/90/135)

Table 10-1940 SRSHARP0_SR7_CIRHPLONG_ALP 0x511d

Bit(s)	R/W	Default	Description
31:16			reserved
15:12	RW	15	reg_sr7_cirhp_long_alpha3: alpha to blend hp_long to the cirpk filter corresponding angle (0/45/90/135)
11:8	RW	15	reg_sr7_cirhp_long_alpha2: alpha to blend hp_long to the cirpk filter corresponding angle (0/45/90/135)
7:4	RW	15	reg_sr7_cirhp_long_alpha1: alpha to blend hp_long to the cirpk filter corresponding angle (0/45/90/135)
3:0	RW	15	reg_sr7_cirhp_long_alpha0: alpha to blend hp_long to the cirpk filter corresponding angle (0/45/90/135)

Table 10-1941 SRSHARP0_SR7_DRTBPLONG_ALP 0x511e

Bit(s)	R/W	Default	Description
31:28	RW	15	reg_sr7_drtbp_long_alpha7: alpha to blend bp_long to the cirpk filter corresponding angle (0/45/90/135)
27:24	RW	15	reg_sr7_drtbp_long_alpha6: alpha to blend bp_long to the cirpk filter corresponding angle (0/45/90/135)

Amlogic Proprietary and Confidential
Copyright © Amlogic. All rights reserved.

Bit(s)	R/W	Default	Description
23:20	RW	15	reg_sr7_drtbp_long_alpha5: alpha to blend bp_long to the cirpk filter corresponding angle (0/45/90/135)
19:16	RW	15	reg_sr7_drtbp_long_alpha4: alpha to blend bp_long to the cirpk filter corresponding angle (0/45/90/135)
15:12	RW	15	reg_sr7_drtbp_long_alpha3: alpha to blend bp_long to the drtpk filter corresponding angle (0/45/90/135)
11:8	RW	15	reg_sr7_drtbp_long_alpha2: alpha to blend bp_long to the drtpk filter corresponding angle (0/45/90/135)
7:4	RW	15	reg_sr7_drtbp_long_alpha1: alpha to blend bp_long to the drtpk filter corresponding angle (0/45/90/135)
3:0	RW	15	reg_sr7_drtbp_long_alpha0: alpha to blend bp_long to the drtpk filter corresponding angle (0/45/90/135)

Table 10-1942 SRSHARP0_SR7_DRTHPLONG_ALP 0x511f

Bit(s)	R/W	Default	Description
31:28	RW	15	reg_sr7_drthp_long_alpha7: alpha to blend bp_long to the cirpk filter corresponding angle (0/45/90/135)
27:24	RW	15	reg_sr7_drthp_long_alpha6: alpha to blend bp_long to the cirpk filter corresponding angle (0/45/90/135)
23:20	RW	15	reg_sr7_drthp_long_alpha5: alpha to blend bp_long to the cirpk filter corresponding angle (0/45/90/135)
19:16	RW	15	reg_sr7_drthp_long_alpha4: alpha to blend bp_long to the cirpk filter corresponding angle (0/45/90/135)
15:12	RW	15	reg_sr7_drthp_long_alpha3: alpha to blend hp_long to the drtpk filter corresponding angle (0/45/90/135)
11:8	RW	15	reg_sr7_drthp_long_alpha2: alpha to blend hp_long to the drtpk filter corresponding angle (0/45/90/135)
7:4	RW	15	reg_sr7_drthp_long_alpha1: alpha to blend hp_long to the drtpk filter corresponding angle (0/45/90/135)
3:0	RW	15	reg_sr7_drthp_long_alpha0: alpha to blend hp_long to the drtpk filter corresponding angle (0/45/90/135)

Table 10-1943 SRSHARP0_SR7_PKMINMAXCIR_BLD_LUT2D0 0x5120

Bit(s)	R/W	Default	Description
31:28	RW	0	reg_sr7_pk_mimaxerr2_cirbld_lut2d7
27:24	RW	0	reg_sr7_pk_mimaxerr2_cirbld_lut2d6
23:20	RW	2	reg_sr7_pk_mimaxerr2_cirbld_lut2d5
19:16	RW	2	reg_sr7_pk_mimaxerr2_cirbld_lut2d4
15:12	RW	4	reg_sr7_pk_mimaxerr2_cirbld_lut2d3
11:8	RW	6	reg_sr7_pk_mimaxerr2_cirbld_lut2d2

Amlogic Proprietary and Confidential
Copyright © Amlogic. All rights reserved.

Bit(s)	R/W	Default	Description
7:4	RW	12	reg_sr7_pk_mimaxerr2_cirbld_lut2d1
3:0	RW	15	reg_sr7_pk_mimaxerr2_cirbld_lut2d0: 2D-LUT for alpha2 for cir-PK blender,larger coef means less drt-pk, x-min_err, y-max_err

Table 10-1944 SRSHARP0_SR7_PKMINMAXCIR_BLD_LUT2D1 0x5121

Bit(s)	R/W	Default	Description
31:28	RW	15	reg_sr7_pk_mimaxerr2_cirbld_lut2d15
27:24	RW	0	reg_sr7_pk_mimaxerr2_cirbld_lut2d14
23:20	RW	2	reg_sr7_pk_mimaxerr2_cirbld_lut2d13
19:16	RW	2	reg_sr7_pk_mimaxerr2_cirbld_lut2d12
15:12	RW	4	reg_sr7_pk_mimaxerr2_cirbld_lut2d11
11:8	RW	6	reg_sr7_pk_mimaxerr2_cirbld_lut2d10
7:4	RW	15	reg_sr7_pk_mimaxerr2_cirbld_lut2d9
3:0	RW	15	reg_sr7_pk_mimaxerr2_cirbld_lut2d8

Table 10-1945 SRSHARP0_SR7_PKMINMAXCIR_BLD_LUT2D2 0x5122

Bit(s)	R/W	Default	Description
31:28	RW	6	reg_sr7_pk_mimaxerr2_cirbld_lut2d23
27:24	RW	10	reg_sr7_pk_mimaxerr2_cirbld_lut2d22
23:20	RW	15	reg_sr7_pk_mimaxerr2_cirbld_lut2d21
19:16	RW	2	reg_sr7_pk_mimaxerr2_cirbld_lut2d20
15:12	RW	2	reg_sr7_pk_mimaxerr2_cirbld_lut2d19
11:8	RW	4	reg_sr7_pk_mimaxerr2_cirbld_lut2d18
7:4	RW	6	reg_sr7_pk_mimaxerr2_cirbld_lut2d17
3:0	RW	12	reg_sr7_pk_mimaxerr2_cirbld_lut2d16

Table 10-1946 SRSHARP0_SR7_PKMINMAXCIR_BLD_LUT2D3 0x5123

Bit(s)	R/W	Default	Description
31:28	RW	14	reg_sr7_pk_mimaxerr2_cirbld_lut2d31
27:24	RW	15	reg_sr7_pk_mimaxerr2_cirbld_lut2d30
23:20	RW	4	reg_sr7_pk_mimaxerr2_cirbld_lut2d29
19:16	RW	8	reg_sr7_pk_mimaxerr2_cirbld_lut2d28
15:12	RW	10	reg_sr7_pk_mimaxerr2_cirbld_lut2d27
11:8	RW	15	reg_sr7_pk_mimaxerr2_cirbld_lut2d26

Amlogic Proprietary and Confidential
Copyright © Amlogic. All rights reserved.

Bit(s)	R/W	Default	Description
7:4	RW	2	reg_sr7_pk_mimaxerr2_cirbld_lut2d25
3:0	RW	4	reg_sr7_pk_mimaxerr2_cirbld_lut2d24

Table 10-1947 SRSHARP0_SR7_PKMINMAXCIR_BLD_LUT2D4 0x5124

Bit(s)	R/W	Default	Description
31:16			reserved
15:12	RW	15	reg_sr7_pk_mimaxerr2_cirbld_lut2d35
11:8	RW	15	reg_sr7_pk_mimaxerr2_cirbld_lut2d34
7:4	RW	15	reg_sr7_pk_mimaxerr2_cirbld_lut2d33
3:0	RW	12	reg_sr7_pk_mimaxerr2_cirbld_lut2d32

Table 10-1948 SRSHARP0_SR7_PKMINMAXLPF_BLD_LUT2D0 0x5125

Bit(s)	R/W	Default	Description
31:28	RW	0	reg_sr7_pk_mimaxerr2_lpfbld_lut2d7
27:24	RW	0	reg_sr7_pk_mimaxerr2_lpfbld_lut2d6
23:20	RW	2	reg_sr7_pk_mimaxerr2_lpfbld_lut2d5
19:16	RW	2	reg_sr7_pk_mimaxerr2_lpfbld_lut2d4
15:12	RW	4	reg_sr7_pk_mimaxerr2_lpfbld_lut2d3
11:8	RW	6	reg_sr7_pk_mimaxerr2_lpfbld_lut2d2
7:4	RW	12	reg_sr7_pk_mimaxerr2_lpfbld_lut2d1
3:0	RW	15	reg_sr7_pk_mimaxerr2_lpfbld_lut2d0: 2D-LUT for alpha2 for PK lpf along edge blender, lareger coef means less lpf along edge,x-min_err, y-max_err

Table 10-1949 SRSHARP0_SR7_PKMINMAXLPF_BLD_LUT2D1 0x5126

Bit(s)	R/W	Default	Description
31:28	RW	15	reg_sr7_pk_mimaxerr2_lpfbld_lut2d15
27:24	RW	0	reg_sr7_pk_mimaxerr2_lpfbld_lut2d14
23:20	RW	2	reg_sr7_pk_mimaxerr2_lpfbld_lut2d13
19:16	RW	2	reg_sr7_pk_mimaxerr2_lpfbld_lut2d12
15:12	RW	4	reg_sr7_pk_mimaxerr2_lpfbld_lut2d11
11:8	RW	6	reg_sr7_pk_mimaxerr2_lpfbld_lut2d10
7:4	RW	15	reg_sr7_pk_mimaxerr2_lpfbld_lut2d9
3:0	RW	15	reg_sr7_pk_mimaxerr2_lpfbld_lut2d8

Amlogic Proprietary and Confidential
Copyright © Amlogic. All rights reserved.

Table 10-1950 SRSHARP0_SR7_PKMINMAXLPF_BLD_LUT2D2 0x5127

Bit(s)	R/W	Default	Description
31:28	RW	6	reg_sr7_pk_mimaxerr2_lpfbld_lut2d23
27:24	RW	10	reg_sr7_pk_mimaxerr2_lpfbld_lut2d22
23:20	RW	15	reg_sr7_pk_mimaxerr2_lpfbld_lut2d21
19:16	RW	2	reg_sr7_pk_mimaxerr2_lpfbld_lut2d20
15:12	RW	2	reg_sr7_pk_mimaxerr2_lpfbld_lut2d19
11:8	RW	4	reg_sr7_pk_mimaxerr2_lpfbld_lut2d18
7:4	RW	6	reg_sr7_pk_mimaxerr2_lpfbld_lut2d17
3:0	RW	12	reg_sr7_pk_mimaxerr2_lpfbld_lut2d16

Table 10-1951 SRSHARP0_SR7_PKMINMAXLPF_BLD_LUT2D3 0x5128

Bit(s)	R/W	Default	Description
31:28	RW	14	reg_sr7_pk_mimaxerr2_lpfbld_lut2d31
27:24	RW	15	reg_sr7_pk_mimaxerr2_lpfbld_lut2d30
23:20	RW	4	reg_sr7_pk_mimaxerr2_lpfbld_lut2d29
19:16	RW	8	reg_sr7_pk_mimaxerr2_lpfbld_lut2d28
15:12	RW	10	reg_sr7_pk_mimaxerr2_lpfbld_lut2d27
11:8	RW	15	reg_sr7_pk_mimaxerr2_lpfbld_lut2d26
7:4	RW	2	reg_sr7_pk_mimaxerr2_lpfbld_lut2d25
3:0	RW	4	reg_sr7_pk_mimaxerr2_lpfbld_lut2d24

Table 10-1952 SRSHARP0_SR7_PKMINMAXLPF_BLD_LUT2D4 0x5129

Bit(s)	R/W	Default	Description
31:16			reserved
15:12	RW	15	reg_sr7_pk_mimaxerr2_lpfbld_lut2d35
11:8	RW	15	reg_sr7_pk_mimaxerr2_lpfbld_lut2d34
7:4	RW	15	reg_sr7_pk_mimaxerr2_lpfbld_lut2d33
3:0	RW	12	reg_sr7_pk_mimaxerr2_lpfbld_lut2d32

Table 10-1953 SRSHARP0_SR7_PKDRT_BLD_EN 0x512a

Bit(s)	R/W	Default	Description
31:1			reserved
0	RW	0	reg_sr7_pkdrtbld_beta_en: enable of direction ambiguity protection for drt and cir blend

Amlogic Proprietary and Confidential
Copyright © Amlogic. All rights reserved.

Table 10-1954 SRSHARP0_SR7_DRTDIF_TH 0x512b

Bit(s)	R/W	Default	Description
31:16			reserved
15::8	RW	128	reg_sr7_drtdif_min2sad_th1
7:0	RW	128	reg_sr7_drtdif_min2sad_th0:for min2_sad threshold for ambiguilty ignoring

Table 10-1955 SRSHARP0_SR7_TIBLD_PRT 0x512c

Bit(s)	R/W	Default	Description
31:16			reserved
13	RW	1	reg_sr7_hlti_dcbld_beta_en:enable of denoise protection for dc org and denoise blend
12	RW	1	reg_sr7_vlti_dcbld_beta_en:enable of denoise protection for dc org and denoise blend
11:8	RW	0	reg_sr7_xcti_dcbld_beta1:beta for denoise and org dc blend base on the x=cal_drt_dif4(min_idx,min2_idx)
7:4	RW	15	reg_sr7_xcti_dcbld_beta0:beta for denoise and org dc blend base on the x=cal_drt_dif4(min_idx,min2_idx)
3	RW	1	reg_sr7_hcti_dcbld_beta_en:enable of denoise protection for dc org and denoise blend
2	RW	1	reg_sr7_vcti_dcbld_beta_en:enable of denoise protection for dc org and denoise blend
1	RW	0	reg_sr7_hcti_dcbld_use_ybeta:enable to use beta from hlti
0	RW	0	reg_sr7_vcti_dcbld_use_ybeta:enable to use beta from vlti

Table 10-1956 SRSHARP0_SR7_HTI_OPT_FORCE 0x512d

Bit(s)	R/W	Default	Description
31:6			reserved
7:6	RW	1	reg_sr7_diag_force_hti1force hti: for diagonal edges luma/chroma, 0: bypass, 1: diagonal use vti, 2:diagonal use hti
5:4	RW	1	reg_sr7_diag_force_hti0:force hti for diagonal edges luma/chroma, 0: bypass, 1: diagonal use vti, 2:diagonal use hti
3	RW	1	reg_sr7_horz_force_vti1:force vti for horizontal edges luma/chroma, 0: bias hti, 1: horizontal edge force 100% vti
2	RW	1	reg_sr7_horz_force_vti0:force vti for horizontal edges luma/chroma, 0: bias hti, 1: horizontal edge force 100% vti
1	RW	1	reg_sr7_alph_force_hvsad1:alpha = minsad*64/maxsad, force minsad=sad_h, maxsad=sad_v for alpha calculation
0	RW	1	reg_sr7_alph_force_hvsad0:alpha = minsad*64/maxsad, force minsad=sad_h, maxsad=sad_v for alpha calculation,[0]for luma, [1] for chroma

Amlogic Proprietary and Confidential
Copyright © Amlogic. All rights reserved.

Table 10-1957 SRSHARP0_SR7_HVTI_FINALGAIN 0x512e

Bit(s)	R/W	Default	Description
31:28			reserved
27:16	RW	256	reg_sr7_hvti_finalgain1: final gain for HVTI boost, for easier level tunning for application
15:12			reserved
11:0	RW	256	reg_sr7_hvti_finalgain0: final gain for HVTI boost, for easier level tunning for application

Table 10-1958 SRSHARP0_SR7_TIOS_SDRATIO 0x512f

Bit(s)	R/W	Default	Description
31:30			reserved
29:24	RW	3	reg_sr7_hti_osmargin_sdratio1:ratio for HTI OS margin adaptive to sd
23:22			reserved
21:16	RW	3	reg_sr7_hti_osmargin_sdratio0:ratio for HTI OS margin adaptive to sd
15:14			reserved
13:8	RW	3	reg_sr7_vti_osmargin_sdratio1:ratio for VTI OS margin adaptive to sd
7:6			reserved
5:0	RW	3	reg_sr7_vti_osmargin_sdratio0:ratio for VTI OS margin adaptive to sd

Table 10-1959 SRSHARP0_SR7_XTI_SDFDEN 0x5130

Bit(s)	R/W	Default	Description
31:1			reserved
1	RW	1	reg_sr7_xtigain_sdfd_en1: adaptive gamma for cti boost gain enable.
0	RW	1	reg_sr7_xtigain_sdfd_en0: adaptive gamma for cti boost gain enable.[0]for luma, [1] for chroma

Table 10-1960 SRSHARP0_SR7_FDSD_PARAM 0x5131

Bit(s)	R/W	Default	Description
31:26			reserved
25	RW	1	reg_fdsd_vlpf_en:use vertical [1 2 1] lpf filter for the fd and sd derivativecalculations
24	RW	1	reg_fdsd_hlpf_en:use horizontal [1 2 1] lpf filter for the fd and sd derivativecalculations
23:20	RW	0	reg_sd_coring_th1:coring to SD'= MAX(SD - FD*ratio - coring,0)
19:16	RW	0	reg_sd_coring_th0:coring to SD'= MAX(SD - FD*ratio - coring,0)
15:14			reserved
13:8	RW	4	reg_sd_coring_ratio2fd1:ratio to FD for adaptive coring to SD'= MAX(SD - FD*ratio - coring,0)

Amlogic Proprietary and Confidential
Copyright © Amlogic. All rights reserved.

Bit(s)	R/W	Default	Description
7:6			reserved
5:0	RW	4	reg_sd_coring_ratio2fd0:ratio to FD for adaptive coring to SD'= MAX(SD - FD*ratio - coring,0)

Table 10-1961 SRSHARP0_SR7_TI_BPF_EN 0x5132

Bit(s)	R/W	Default	Description
31:4			reserved
3	RW	1	reg_sr7_hlti_bpf_en:enable of tap09 BPF for hlti (gain3), only store half of the filter
2	RW	1	reg_sr7_hcti_bpf_en:enable of tap09 BPF for hcti (gain3), only store half of the filter
1	RW	1	reg_sr7_vlti_bpf_en:enable of tap09 BPF for vcti (gain3), only store half of the filter
0	RW	1	reg_sr7_vcti_bpf_en:enable of tap09 BPF for vlti (gain3), only store half of the filter

Table 10-1962 SRSHARP0_SR7_PKLONG_PF_EN 0x5133

Bit(s)	R/W	Default	Description
31:2			reserved
1	RW	1	reg_sr7_pk_long_bpf_en:enable of long BPF for peaking
0	RW	1	reg_sr7_pk_long_hpf_en:enable of long HPF for peaking

Table 10-1963 SRSHARP0_SR7_PKLONG_PF_GAIN 0x5134

Bit(s)	R/W	Default	Description
31:24	RW	64	reg_sr7_pk_long_bpf_hzgain:gain to long horizontal BPF for peaking
23:16	RW	64	reg_sr7_pk_long_bpf_vdgain:gain to long vertical and diagonal BPF for peaking
15:8	RW	64	reg_sr7_pk_long_hpf_hzgain:gain to long horizontal HPF for peaking
7:0	RW	64	reg_sr7_pk_long_hpf_vdgain:gain to long vertical and diagonal HPF for peaking

Table 10-1964 SRSHARP0_SR7_PKMINMAX_BLD 0x5135

Bit(s)	R/W	Default	Description
31:4			reserved
3	RW	1	reg_sr7_pk_mimaxerr2_cirbld_on_bp:enable to use adaptive blender of drtBP vs cirBP alpha2, the larger of cell, the more cirPK results, 0: alp2=lut2d(minerr, maxerr),1:alp2=min_err/maxerr
2	RW	1	reg_sr7_pk_mimaxerr2_cirbld_on_hp:enable to use adaptive blender of drtHP vs cirHP alpha2, the larger of cell, the more cirPK results, 0: alp2=lut2d(minerr, maxerr),1:alp2=min_err/maxerr

Amlogic Proprietary and Confidential
Copyright © Amlogic. All rights reserved.

Bit(s)	R/W	Default	Description
1	RW	1	reg_sr7_pk_mimaxerr2_lpfbld_on_bp:enable to use adaptive blender of BP result lpf along edge based on the mimaxsad relationship
0	RW	1	reg_sr7_pk_mimaxerr2_lpfbld_on_hp:enable to use adaptive blender of HP result lpf along edge based on the mimaxsad relationship

Table 10-1965 SRSHARP0_SR7_TI_CONMAXERR_GAIN 0x5136

Bit(s)	R/W	Default	Description
31:16			reserved
15:12	RW	8	reg_sr7_hti_conmaxerr_gain1:con=max(con, maxerr) for the horizontal transition calculation, gain=0, same as s6 and prev, [0] for y and [1] for uv
11:8	RW	8	reg_sr7_hti_conmaxerr_gain0:con=max(con, maxerr) for the horizontal transition calculation, gain=0, same as s6 and prev, [0] for y and [1] for uv
7:4	RW	8	reg_sr7_vti_conmaxerr_gain1:con=max(con, maxerr) for the vertical transition calculation, gain=0, same as s6 and prev, [0] for y and [1] for uv
3:0	RW	8	reg_sr7_vti_conmaxerr_gain0:con=max(con, maxerr) for the vertical transition calculation, gain=0, same as s6 and prev, [0] for y and [1] for uv

Table 10-1966 SRSHARP0_SR7_CC_PK_ADJ 0x5137

Bit(s)	R/W	Default	Description
31:25			reserved
24	RW	1	reg_sr7_cc_enable:color compensation enable, 0: no CC, 1: with CC
23:22			reserved
21:20	RW	0	reg_sr7_cc_yinp_sel:color compensation input luma selection, 0: org_y; 1: gau_y ; 2:gauadp_y; 3:edgeadp_y (same as dnlp input sel)
19:18	RW	2	reg_sr7_cc_ydlt_sel:color compensation output luma selection, 0: peaking+lti output; 1: dnlp output; 2/3: peaking+lti+dnlp
17:16	RW	1	reg_sr7_cc_sat_norm:normalization of lut cell to saturation. 0: norm to 8 as 1.0, sat[0:23/8]; 1: norm to 16 as 1.0, sat[1/16:31/16]; 2: norm to 32 as 1.0, sat[17/32:47/32]; 3:norm to 64 as 1.0, sat[49/64:79/64]
15:8	RW	64	reg_sr7_cc_ydlt_pscl:prescale to the y-delta (if >0) before feeding to y-lumadlt, normalized 64 as 1.0
7:0	RW	64	reg_sr7_cc_ydlt_nscl:prescale to the y-delta (if <0) before feeding to y-lumadlt, normalized 64 as 1.0

Table 10-1967 SRSHARP0_SR7_CC_LUT0 0x5138

Bit(s)	R/W	Default	Description
31:28	RW	0	reg_sr7_cc_lut003:valid for y-lumadlt= 1/4, 1/2, 3/4, 1.0; of x-lumainput=0
27:24	RW	0	reg_sr7_cc_lut002:valid for y-lumadlt= 1/4, 1/2, 3/4, 1.0; of x-lumainput=0
23:20	RW	0	reg_sr7_cc_lut001:valid for y-lumadlt= 1/4, 1/2, 3/4, 1.0; of x-lumainput=0
19:16	RW	0	reg_sr7_cc_lut000:valid for y-lumadlt= 1/4, 1/2, 3/4, 1.0; of x-lumainput=0
15:12	RW	8	reg_sr7_cc_lut103:valid for y-lumadlt= 1/4, 1/2, 3/4, 1.0; of x-lumainput=1/8

Amlogic Proprietary and Confidential
Copyright © Amlogic. All rights reserved.

Bit(s)	R/W	Default	Description
11:8	RW	4	reg_sr7_cc_lut102:valid for y-lumadlt= 1/4, 1/2, 3/4, 1.0; of x-lumainput=1/8
7:4	RW	2	reg_sr7_cc_lut101:valid for y-lumadlt= 1/4, 1/2, 3/4, 1.0; of x-lumainput=1/8
3:0	RW	1	reg_sr7_cc_lut100:valid for y-lumadlt= 1/4, 1/2, 3/4, 1.0; of x-lumainput=1/8

Table 10-1968 SRSHARP0_SR7_CC_LUT1 0x5139

Bit(s)	R/W	Default	Description
31:28			reserved
27:24	RW	12	reg_sr7_cc_lut202:valid for y-lumadlt= 1/4, 1/2, 3/4; of x-lumainput=2/8
23:20	RW	8	reg_sr7_cc_lut201:valid for y-lumadlt= 1/4, 1/2, 3/4; of x-lumainput=2/8
19:16	RW	4	reg_sr7_cc_lut200:valid for y-lumadlt= 1/4, 1/2, 3/4; of x-lumainput=2/8
15:12			reserved
11:8	RW	15	reg_sr7_cc_lut302:valid for y-lumadlt= 1/4, 1/2, 3/4; of x-lumainput=3/8
7:4	RW	10	reg_sr7_cc_lut301:valid for y-lumadlt= 1/4, 1/2, 3/4; of x-lumainput=3/8
3:0	RW	5	reg_sr7_cc_lut300:valid for y-lumadlt= 1/4, 1/2, 3/4; of x-lumainput=3/8

Table 10-1969 SRSHARP0_SR7_CC_LUT2 0x513a

Bit(s)	R/W	Default	Description
31:24			reserved
23:20	RW	15	reg_sr7_cc_lut401:valid for y-lumadlt= 1/4, 1/2 ; of x-lumainput=4/8
19:16	RW	8	reg_sr7_cc_lut400:valid for y-lumadlt= 1/4, 1/2; of x-lumainput=4/8
15:12	RW	13	reg_sr7_cc_lut501:valid for y-lumadlt= 1/4, 1/2; of x-lumainput=5/8
11:8	RW	6	reg_sr7_cc_lut500:valid for y-lumadlt= 1/4, 1/2; of x-lumainput=5/8
7:4	RW	5	reg_sr7_cc_lut600:valid for y-lumadlt= 1/4 of x-lumainput=6/8
3:0	RW	4	reg_sr7_cc_lut700:valid for y-lumadlt= 1/4 of x-lumainput=7/8

Table 10-1970 SRSHARP0_SR7_CC_LUT3 0x513b

Bit(s)	R/W	Default	Description
31:24			reserved
23:20	RW	4	reg_sr7_cc_lut710:valid for y-lumadlt= -1/4,; of x-lumainput=1/8
19:16	RW	5	reg_sr7_cc_lut610:valid for y-lumadlt= -1/4,; of x-lumainput=2/8
15:12	RW	13	reg_sr7_cc_lut511:valid for y-lumadlt= -1/4, -1/2; of x-lumainput=3/8
11:8	RW	6	reg_sr7_cc_lut510:valid for y-lumadlt= -1/4, -1/2; of x-lumainput=3/8
7:4	RW	15	reg_sr7_cc_lut411:valid for y-lumadlt= -1/4, -1/2 of x-lumainput=4/8
3:0	RW	8	reg_sr7_cc_lut410:valid for y-lumadlt= -1/4 , -1/2 of x-lumainput=4/8

Amlogic Proprietary and Confidential
Copyright © Amlogic. All rights reserved.

Table 10-1971 SRSHARP0_SR7_CC_LUT4 0x513c

Bit(s)	R/W	Default	Description
31:24			reserved
23:20	RW	15	reg_sr7_cc_lut312:valid for y-lumadlt= -1/4,-1/2, -3/4; of x-lumainput=5/8
19:16	RW	10	reg_sr7_cc_lut311:valid for y-lumadlt= -1/4,-1/2, -3/4; of x-lumainput=5/8
15:12	RW	5	reg_sr7_cc_lut310:valid for y-lumadlt= -1/4,-1/2, -3/4; of x-lumainput=5/8
11:8	RW	12	reg_sr7_cc_lut212:valid for y-lumadlt= -1/4, -1/2, -3/4;; of x-lumainput=6/8
7:4	RW	8	reg_sr7_cc_lut211:valid for y-lumadlt= -1/4, -1/2, -3/4; of x-lumainput=6/8
3:0	RW	4	reg_sr7_cc_lut210:valid for y-lumadlt= -1/4, -1/2, -3/4; of x-lumainput=6/8

Table 10-1972 SRSHARP0_SR7_CC_LUT5 0x513d

Bit(s)	R/W	Default	Description
31:28	RW	8	reg_sr7_cc_lut113:valid for y-lumadlt= -1/4, -1/2, -3/4, -1.0; of x-lumainput=7/8
27:24	RW	4	reg_sr7_cc_lut112:valid for y-lumadlt= -1/4, -1/2, -3/4, -1.0; of x-lumainput=7/8
23:20	RW	2	reg_sr7_cc_lut111:valid for y-lumadlt= -1/4, -1/2, -3/4, -1.0; of x-lumainput=7/8
19:16	RW	1	reg_sr7_cc_lut110:valid for y-lumadlt= -1/4, -1/2, -3/4, -1.0; of x-lumainput=7/8
15:12	RW	0	reg_sr7_cc_lut013:valid for y-lumadlt= -1/4, -1/2, -3/4, -1.0; of x-lumainput=8/8
11:8	RW	0	reg_sr7_cc_lut012:valid for y-lumadlt= -1/4, -1/2, -3/4, -1.0; of x-lumainput=8/8
7:4	RW	0	reg_sr7_cc_lut011:valid for y-lumadlt= -1/4, -1/2, -3/4, -1.0; of x-lumainput=8/8
3:0	RW	0	reg_sr7_cc_lut010:valid for y-lumadlt= -1/4, -1/2, -3/4, -1.0; of x-lumainput=8/8

Table 10-1973 SRSHARP0_SR7_GRAPHIC_CTRL 0x513e

Bit(s)	R/W	Default	Description
31:11			reserved
10	RW	1	reg_sr7_grph_en:enable graphic statistic
9	RW	1	reg_sr7_grph_hflt:horizontal filter, 0: [0 1 -1], 1: [-1 2 -1]
8	RW	1	reg_sr7_grph_vflt: vertical filter, 0: [0 1 -1], 1: [-1 2 -1]
7:0	RW	0	reg_sr7_grph_dif_cor:coring for dif while count for graphic

Table 10-1974 SRSHARP0_SR7_GRAPHIC_THD_GAIN 0x513f

Bit(s)	R/W	Default	Description
31:24	RW	2	reg_sr7_grph_flt_thd: flat threshold for dif while count for graphic.
23:16	RW	40	reg_sr7_grph_dtl_thd:detail threshold for dif while count for graphic
15:8	RW	32	reg_sr7_grph_hgain:horizontal gain for fast squart of hp
7:0	RW	32	reg_sr7_grph_vgain:vertical gain for fast squart of hp

Amlogic Proprietary and Confidential
Copyright © Amlogic. All rights reserved.

Table 10-1975 SRSHARP0_SR7_RO_GRAPHIC_FLT_CNT 0x5140

Bit(s)	R/W	Default	Description
31:0	RO	0	ro_sr7_grph_flt_cnt:: flat count numbers for graphic

Table 10-1976 SRSHARP0_SR7_RO_GRAPHIC_DTL_CNT 0x5141+

Bit(s)	R/W	Default	Description
31:0	RO	0	ro_sr7_grph_dtl_cnt::detail count numbers for graphic

Table 10-1977 SRSHARP0_SR7_CLR_PRT_PARAM 0x5142

Bit(s)	R/W	Default	Description
31:18			reserved
17:16	RW	3	reg_sr7_clr_prct_inpsel:input UV selection for color protection, 0: org; 1: NRout; 2: CTIout; 3: (NR+TIout)/2
15:8	RW	64	reg_sr7_clr_prct_dnlp_gain:gain to de-boost of dnlp_dlt base on color region, norm to 64 as 1.0. set to 0 as disable.
7:0	RW	64	reg_sr7_clr_prct_peak_gain:gain to de-boost of peak_dlt base on color region, norm to 64 as 1.0, set to 0 as disable

Table 10-1978 SRSHARP0_SR7_CLR_PRT_LC_GAIN 0x5143

Bit(s)	R/W	Default	Description
31:24			reserved
23:16	RW	64	reg_sr7_clr_prct_lc_gain2:gain to de-boost of lc_dlt (y/u/v) base on color region, norm to 64 as 1.0, set to 0 as disable
15:8	RW	64	reg_sr7_clr_prct_lc_gain1:gain to de-boost of lc_dlt (y/u/v) base on color region, norm to 64 as 1.0, set to 0 as disable
7:0	RW	64	reg_sr7_clr_prct_lc_gain0:gain to de-boost of lc_dlt (y/u/v) base on color region, norm to 64 as 1.0, set to 0 as disable

Table 10-1979 SRSHARP0_SR7_CLR_PRT_LUT0 0x5144

Bit(s)	R/W	Default	Description
31:28	RW	0	reg_sr7_clr_prct_lut7:color protection lut, 16 is normalized to 1
27:24	RW	0	reg_sr7_clr_prct_lut6:color protection lut, 16 is normalized to 1
23:20	RW	0	reg_sr7_clr_prct_lut5:color protection lut, 16 is normalized to 1
19:16	RW	0	reg_sr7_clr_prct_lut4:color protection lut, 16 is normalized to 1
15:12	RW	0	reg_sr7_clr_prct_lut3:color protection lut, 16 is normalized to 1
11:8	RW	0	reg_sr7_clr_prct_lut2:color protection lut, 16 is normalized to 1
7:4	RW	0	reg_sr7_clr_prct_lut1:color protection lut, 16 is normalized to 1
3:0	RW	0	reg_sr7_clr_prct_lut0:color protection lut, 16 is normalized to 1

Amlogic Proprietary and Confidential
Copyright © Amlogic. All rights reserved.

Table 10-1980 SRSHARP0_SR7_CLR_PRT_LUT1 0x5145

Bit(s)	R/W	Default	Description
31:28	RW	0	reg_sr7_clr_prct_lut15:color protection lut, 16 is normalized to 1
27:24	RW	0	reg_sr7_clr_prct_lut14:color protection lut, 16 is normalized to 1
23:20	RW	0	reg_sr7_clr_prct_lut13:color protection lut, 16 is normalized to 1
19:16	RW	0	reg_sr7_clr_prct_lut12:color protection lut, 16 is normalized to 1
15:12	RW	0	reg_sr7_clr_prct_lut11:color protection lut, 16 is normalized to 1
11:8	RW	0	reg_sr7_clr_prct_lut10:color protection lut, 16 is normalized to 1
7:4	RW	0	reg_sr7_clr_prct_lut9:color protection lut, 16 is normalized to 1
3:0	RW	0	reg_sr7_clr_prct_lut8:color protection lut, 16 is normalized to 1

Table 10-1981 SRSHARP0_SR7_CLR_PRT_LUT2 0x5146

Bit(s)	R/W	Default	Description
31:28	RW	0	reg_sr7_clr_prct_lut23:color protection lut, 16 is normalized to 1
27:24	RW	0	reg_sr7_clr_prct_lut22:color protection lut, 16 is normalized to 1
23:20	RW	0	reg_sr7_clr_prct_lut21:color protection lut, 16 is normalized to 1
19:16	RW	0	reg_sr7_clr_prct_lut20:color protection lut, 16 is normalized to 1
15:12	RW	0	reg_sr7_clr_prct_lut19:color protection lut, 16 is normalized to 1
11:8	RW	0	reg_sr7_clr_prct_lut18:color protection lut, 16 is normalized to 1
7:4	RW	0	reg_sr7_clr_prct_lut17:color protection lut, 16 is normalized to 1
3:0	RW	0	reg_sr7_clr_prct_lut16:color protection lut, 16 is normalized to 1

Table 10-1982 SRSHARP0_SR7_CLR_PRT_LUT3 0x5147

Bit(s)	R/W	Default	Description
31:28	RW	0	reg_sr7_clr_prct_lut31:color protection lut, 16 is normalized to 1
27:24	RW	0	reg_sr7_clr_prct_lut30:color protection lut, 16 is normalized to 1
23:20	RW	0	reg_sr7_clr_prct_lut29:color protection lut, 16 is normalized to 1
19:16	RW	0	reg_sr7_clr_prct_lut28:color protection lut, 16 is normalized to 1
15:12	RW	0	reg_sr7_clr_prct_lut27:color protection lut, 16 is normalized to 1
11:8	RW	0	reg_sr7_clr_prct_lut26:color protection lut, 16 is normalized to 1
7:4	RW	0	reg_sr7_clr_prct_lut25:color protection lut, 16 is normalized to 1
3:0	RW	0	reg_sr7_clr_prct_lut24:color protection lut, 16 is normalized to 1

Amlogic Proprietary and Confidential
Copyright © Amlogic. All rights reserved.

Table 10-1983 SRSHARP0_SR7_CLR_PRT_LUT4 0x5148

Bit(s)	R/W	Default	Description
31:28	RW	0	reg_sr7_clr_prct_lut39:color protection lut, 16 is normalized to 1
27:24	RW	0	reg_sr7_clr_prct_lut38:color protection lut, 16 is normalized to 1
23:20	RW	0	reg_sr7_clr_prct_lut37:color protection lut, 16 is normalized to 1
19:16	RW	0	reg_sr7_clr_prct_lut36:color protection lut, 16 is normalized to 1
15:12	RW	0	reg_sr7_clr_prct_lut35:color protection lut, 16 is normalized to 1
11:8	RW	0	reg_sr7_clr_prct_lut34:color protection lut, 16 is normalized to 1
7:4	RW	0	reg_sr7_clr_prct_lut33:color protection lut, 16 is normalized to 1
3:0	RW	0	reg_sr7_clr_prct_lut32:color protection lut, 16 is normalized to 1

Table 10-1984 SRSHARP0_SR7_CLR_PRT_LUT5 0x5149

Bit(s)	R/W	Default	Description
31:28	RW	0	reg_sr7_clr_prct_lut47:color protection lut, 16 is normalized to 1
27:24	RW	0	reg_sr7_clr_prct_lut46:color protection lut, 16 is normalized to 1
23:20	RW	0	reg_sr7_clr_prct_lut45:color protection lut, 16 is normalized to 1
19:16	RW	0	reg_sr7_clr_prct_lut44:color protection lut, 16 is normalized to 1
15:12	RW	0	reg_sr7_clr_prct_lut43:color protection lut, 16 is normalized to 1
11:8	RW	0	reg_sr7_clr_prct_lut42:color protection lut, 16 is normalized to 1
7:4	RW	0	reg_sr7_clr_prct_lut41:color protection lut, 16 is normalized to 1
3:0	RW	0	reg_sr7_clr_prct_lut40:color protection lut, 16 is normalized to 1

Table 10-1985 SRSHARP0_SR7_CLR_PRT_LUT6 0x514a

Bit(s)	R/W	Default	Description
31:28	RW	0	reg_sr7_clr_prct_lut55:color protection lut, 16 is normalized to 1
27:24	RW	0	reg_sr7_clr_prct_lut54:color protection lut, 16 is normalized to 1
23:20	RW	0	reg_sr7_clr_prct_lut53:color protection lut, 16 is normalized to 1
19:16	RW	0	reg_sr7_clr_prct_lut52:color protection lut, 16 is normalized to 1
15:12	RW	0	reg_sr7_clr_prct_lut51:color protection lut, 16 is normalized to 1
11:8	RW	0	reg_sr7_clr_prct_lut50:color protection lut, 16 is normalized to 1
7:4	RW	0	reg_sr7_clr_prct_lut49:color protection lut, 16 is normalized to 1
3:0	RW	0	reg_sr7_clr_prct_lut48:color protection lut, 16 is normalized to 1

Amlogic Proprietary and Confidential
Copyright © Amlogic. All rights reserved.

Table 10-1986 SRSHARP0_SR7_CLR_PRT_LUT7 0x514b

Bit(s)	R/W	Default	Description
31:28	RW	0	reg_sr7_clr_prct_lut63:color protection lut, 16 is normalized to 1
27:24	RW	0	reg_sr7_clr_prct_lut62:color protection lut, 16 is normalized to 1
23:20	RW	0	reg_sr7_clr_prct_lut61:color protection lut, 16 is normalized to 1
19:16	RW	0	reg_sr7_clr_prct_lut60:color protection lut, 16 is normalized to 1
15:12	RW	0	reg_sr7_clr_prct_lut59:color protection lut, 16 is normalized to 1
11:8	RW	0	reg_sr7_clr_prct_lut58:color protection lut, 16 is normalized to 1
7:4	RW	0	reg_sr7_clr_prct_lut57:color protection lut, 16 is normalized to 1
3:0	RW	0	reg_sr7_clr_prct_lut56:color protection lut, 16 is normalized to 1

Table 10-1987 SRSHARP0_SR7_CLR_PRT_LUT8 0x514c

Bit(s)	R/W	Default	Description
31:28	RW	0	reg_sr7_clr_prct_lut71:color protection lut, 16 is normalized to 1
27:24	RW	0	reg_sr7_clr_prct_lut70:color protection lut, 16 is normalized to 1
23:20	RW	0	reg_sr7_clr_prct_lut69:color protection lut, 16 is normalized to 1
19:16	RW	0	reg_sr7_clr_prct_lut68:color protection lut, 16 is normalized to 1
15:12	RW	0	reg_sr7_clr_prct_lut67:color protection lut, 16 is normalized to 1
11:8	RW	0	reg_sr7_clr_prct_lut66:color protection lut, 16 is normalized to 1
7:4	RW	0	reg_sr7_clr_prct_lut65:color protection lut, 16 is normalized to 1
3:0	RW	0	reg_sr7_clr_prct_lut64:color protection lut, 16 is normalized to 1

Table 10-1988 SRSHARP0_SR7_CLR_PRT_LUT9 0x514d

Bit(s)	R/W	Default	Description
31:28	RW	0	reg_sr7_clr_prct_lut79:color protection lut, 16 is normalized to 1
27:24	RW	0	reg_sr7_clr_prct_lut78:color protection lut, 16 is normalized to 1
23:20	RW	0	reg_sr7_clr_prct_lut77:color protection lut, 16 is normalized to 1
19:16	RW	0	reg_sr7_clr_prct_lut76:color protection lut, 16 is normalized to 1
15:12	RW	0	reg_sr7_clr_prct_lut75:color protection lut, 16 is normalized to 1
11:8	RW	0	reg_sr7_clr_prct_lut74:color protection lut, 16 is normalized to 1
7:4	RW	0	reg_sr7_clr_prct_lut73:color protection lut, 16 is normalized to 1
3:0	RW	0	reg_sr7_clr_prct_lut72:color protection lut, 16 is normalized to 1

Amlogic Proprietary and Confidential
Copyright © Amlogic. All rights reserved.

Table 10-1989 SRSHARP0_SR7_CLR_PRT_LUT10 0x514e

Bit(s)	R/W	Default	Description
31:28	RW	0	reg_sr7_clr_prct_lut87:color protection lut, 16 is normalized to 1
27:24	RW	0	reg_sr7_clr_prct_lut86:color protection lut, 16 is normalized to 1
23:20	RW	0	reg_sr7_clr_prct_lut85:color protection lut, 16 is normalized to 1
19:16	RW	0	reg_sr7_clr_prct_lut84:color protection lut, 16 is normalized to 1
15:12	RW	0	reg_sr7_clr_prct_lut83:color protection lut, 16 is normalized to 1
11:8	RW	0	reg_sr7_clr_prct_lut82:color protection lut, 16 is normalized to 1
7:4	RW	0	reg_sr7_clr_prct_lut81:color protection lut, 16 is normalized to 1
3:0	RW	0	reg_sr7_clr_prct_lut80:color protection lut, 16 is normalized to 1

Table 10-1990 SRSHARP0_SR7_CLR_PRT_LUT11 0x514f

Bit(s)	R/W	Default	Description
31:28	RW	0	reg_sr7_clr_prct_lut95:color protection lut, 16 is normalized to 1
27:24	RW	0	reg_sr7_clr_prct_lut94:color protection lut, 16 is normalized to 1
23:20	RW	0	reg_sr7_clr_prct_lut93:color protection lut, 16 is normalized to 1
19:16	RW	0	reg_sr7_clr_prct_lut92:color protection lut, 16 is normalized to 1
15:12	RW	0	reg_sr7_clr_prct_lut91:color protection lut, 16 is normalized to 1
11:8	RW	0	reg_sr7_clr_prct_lut90:color protection lut, 16 is normalized to 1
7:4	RW	0	reg_sr7_clr_prct_lut89:color protection lut, 16 is normalized to 1
3:0	RW	0	reg_sr7_clr_prct_lut88:color protection lut, 16 is normalized to 1

Table 10-1991 SRSHARP0_SR7_CLR_PRT_LUT12 0x5150

Bit(s)	R/W	Default	Description
31:28	RW	0	reg_sr7_clr_prct_lut103:color protection lut, 16 is normalized to 1
27:24	RW	0	reg_sr7_clr_prct_lut102:color protection lut, 16 is normalized to 1
23:20	RW	0	reg_sr7_clr_prct_lut101:color protection lut, 16 is normalized to 1
19:16	RW	0	reg_sr7_clr_prct_lut100:color protection lut, 16 is normalized to 1
15:12	RW	0	reg_sr7_clr_prct_lut99:color protection lut, 16 is normalized to 1
11:8	RW	0	reg_sr7_clr_prct_lut98:color protection lut, 16 is normalized to 1
7:4	RW	0	reg_sr7_clr_prct_lut97:color protection lut, 16 is normalized to 1
3:0	RW	0	reg_sr7_clr_prct_lut96:color protection lut, 16 is normalized to 1

Amlogic Proprietary and Confidential
Copyright © Amlogic. All rights reserved.

Table 10-1992 SRSHARP0_SR7_CLR_PRT_LUT13 0x5151

Bit(s)	R/W	Default	Description
31:28	RW	0	reg_sr7_clr_prct_lut111:color protection lut, 16 is normalized to 1
27:24	RW	0	reg_sr7_clr_prct_lut110:color protection lut, 16 is normalized to 1
23:20	RW	0	reg_sr7_clr_prct_lut109:color protection lut, 16 is normalized to 1
19:16	RW	0	reg_sr7_clr_prct_lut108:color protection lut, 16 is normalized to 1
15:12	RW	0	reg_sr7_clr_prct_lut107:color protection lut, 16 is normalized to 1
11:8	RW	0	reg_sr7_clr_prct_lut106:color protection lut, 16 is normalized to 1
7:4	RW	0	reg_sr7_clr_prct_lut105:color protection lut, 16 is normalized to 1
3:0	RW	0	reg_sr7_clr_prct_lut104:color protection lut, 16 is normalized to 1

Table 10-1993 SRSHARP0_SR7_CLR_PRT_LUT14 0x5152

Bit(s)	R/W	Default	Description
31:28	RW	0	reg_sr7_clr_prct_lut119:color protection lut, 16 is normalized to 1
27:24	RW	0	reg_sr7_clr_prct_lut118:color protection lut, 16 is normalized to 1
23:20	RW	0	reg_sr7_clr_prct_lut117:color protection lut, 16 is normalized to 1
19:16	RW	0	reg_sr7_clr_prct_lut116:color protection lut, 16 is normalized to 1
15:12	RW	0	reg_sr7_clr_prct_lut115:color protection lut, 16 is normalized to 1
11:8	RW	0	reg_sr7_clr_prct_lut114:color protection lut, 16 is normalized to 1
7:4	RW	0	reg_sr7_clr_prct_lut113:color protection lut, 16 is normalized to 1
3:0	RW	0	reg_sr7_clr_prct_lut112:color protection lut, 16 is normalized to 1

Table 10-1994 SRSHARP0_SR7_CLR_PRT_LUT15 0x5153

Bit(s)	R/W	Default	Description
31:28	RW	0	reg_sr7_clr_prct_lut127:color protection lut, 16 is normalized to 1
27:24	RW	0	reg_sr7_clr_prct_lut126:color protection lut, 16 is normalized to 1
23:20	RW	0	reg_sr7_clr_prct_lut125:color protection lut, 16 is normalized to 1
19:16	RW	0	reg_sr7_clr_prct_lut124:color protection lut, 16 is normalized to 1
15:12	RW	0	reg_sr7_clr_prct_lut123:color protection lut, 16 is normalized to 1
11:8	RW	0	reg_sr7_clr_prct_lut122:color protection lut, 16 is normalized to 1
7:4	RW	0	reg_sr7_clr_prct_lut121:color protection lut, 16 is normalized to 1
3:0	RW	0	reg_sr7_clr_prct_lut120:color protection lut, 16 is normalized to 1

Amlogic Proprietary and Confidential
Copyright © Amlogic. All rights reserved.

Table 10-1995 SRSHARP0_SR7_CLR_PRT_LUT16 0x5154

Bit(s)	R/W	Default	Description
31:28	RW	0	reg_sr7_clr_prct_lut135:color protection lut, 16 is normalized to 1
27:24	RW	0	reg_sr7_clr_prct_lut134:color protection lut, 16 is normalized to 1
23:20	RW	0	reg_sr7_clr_prct_lut133:color protection lut, 16 is normalized to 1
19:16	RW	0	reg_sr7_clr_prct_lut132:color protection lut, 16 is normalized to 1
15:12	RW	0	reg_sr7_clr_prct_lut131:color protection lut, 16 is normalized to 1
11:8	RW	0	reg_sr7_clr_prct_lut130:color protection lut, 16 is normalized to 1
7:4	RW	0	reg_sr7_clr_prct_lut129:color protection lut, 16 is normalized to 1
3:0	RW	0	reg_sr7_clr_prct_lut128:color protection lut, 16 is normalized to 1

Table 10-1996 SRSHARP0_SR7_CLR_PRT_LUT17 0x5155

Bit(s)	R/W	Default	Description
31:28	RW	0	reg_sr7_clr_prct_lut143:color protection lut, 16 is normalized to 1
27:24	RW	0	reg_sr7_clr_prct_lut142:color protection lut, 16 is normalized to 1
23:20	RW	0	reg_sr7_clr_prct_lut141:color protection lut, 16 is normalized to 1
19:16	RW	0	reg_sr7_clr_prct_lut140:color protection lut, 16 is normalized to 1
15:12	RW	0	reg_sr7_clr_prct_lut139:color protection lut, 16 is normalized to 1
11:8	RW	0	reg_sr7_clr_prct_lut138:color protection lut, 16 is normalized to 1
7:4	RW	0	reg_sr7_clr_prct_lut137:color protection lut, 16 is normalized to 1
3:0	RW	0	reg_sr7_clr_prct_lut136:color protection lut, 16 is normalized to 1

Table 10-1997 SRSHARP0_SR7_CLR_PRT_LUT18 0x5156

Bit(s)	R/W	Default	Description
31:28	RW	0	reg_sr7_clr_prct_lut151:color protection lut, 16 is normalized to 1
27:24	RW	0	reg_sr7_clr_prct_lut150:color protection lut, 16 is normalized to 1
23:20	RW	0	reg_sr7_clr_prct_lut149:color protection lut, 16 is normalized to 1
19:16	RW	0	reg_sr7_clr_prct_lut148:color protection lut, 16 is normalized to 1
15:12	RW	0	reg_sr7_clr_prct_lut147:color protection lut, 16 is normalized to 1
11:8	RW	0	reg_sr7_clr_prct_lut146:color protection lut, 16 is normalized to 1
7:4	RW	0	reg_sr7_clr_prct_lut145:color protection lut, 16 is normalized to 1
3:0	RW	0	reg_sr7_clr_prct_lut144:color protection lut, 16 is normalized to 1

Amlogic Proprietary and Confidential
Copyright © Amlogic. All rights reserved.

Table 10-1998 SRSHARP0_SR7_CLR_PRT_LUT19 0x5157

Bit(s)	R/W	Default	Description
31:28	RW	0	reg_sr7_clr_prct_lut159:color protection lut, 16 is normalized to 1
27:24	RW	0	reg_sr7_clr_prct_lut158:color protection lut, 16 is normalized to 1
23:20	RW	0	reg_sr7_clr_prct_lut157:color protection lut, 16 is normalized to 1
19:16	RW	0	reg_sr7_clr_prct_lut156:color protection lut, 16 is normalized to 1
15:12	RW	0	reg_sr7_clr_prct_lut155:color protection lut, 16 is normalized to 1
11:8	RW	0	reg_sr7_clr_prct_lut154:color protection lut, 16 is normalized to 1
7:4	RW	0	reg_sr7_clr_prct_lut153:color protection lut, 16 is normalized to 1
3:0	RW	0	reg_sr7_clr_prct_lut152:color protection lut, 16 is normalized to 1

Table 10-1999 SRSHARP0_SR7_CLR_PRT_LUT20 0x5158

Bit(s)	R/W	Default	Description
31:28	RW	0	reg_sr7_clr_prct_lut167:color protection lut, 16 is normalized to 1
27:24	RW	0	reg_sr7_clr_prct_lut166:color protection lut, 16 is normalized to 1
23:20	RW	0	reg_sr7_clr_prct_lut165:color protection lut, 16 is normalized to 1
19:16	RW	0	reg_sr7_clr_prct_lut164:color protection lut, 16 is normalized to 1
15:12	RW	0	reg_sr7_clr_prct_lut163:color protection lut, 16 is normalized to 1
11:8	RW	0	reg_sr7_clr_prct_lut162:color protection lut, 16 is normalized to 1
7:4	RW	0	reg_sr7_clr_prct_lut161:color protection lut, 16 is normalized to 1
3:0	RW	0	reg_sr7_clr_prct_lut160:color protection lut, 16 is normalized to 1

Table 10-2000 SRSHARP0_SR7_CLR_PRT_LUT21 0x5159

Bit(s)	R/W	Default	Description
31:28	RW	0	reg_sr7_clr_prct_lut175:color protection lut, 16 is normalized to 1
27:24	RW	0	reg_sr7_clr_prct_lut174:color protection lut, 16 is normalized to 1
23:20	RW	0	reg_sr7_clr_prct_lut173:color protection lut, 16 is normalized to 1
19:16	RW	0	reg_sr7_clr_prct_lut172:color protection lut, 16 is normalized to 1
15:12	RW	0	reg_sr7_clr_prct_lut171:color protection lut, 16 is normalized to 1
11:8	RW	0	reg_sr7_clr_prct_lut170:color protection lut, 16 is normalized to 1
7:4	RW	0	reg_sr7_clr_prct_lut169:color protection lut, 16 is normalized to 1
3:0	RW	0	reg_sr7_clr_prct_lut168:color protection lut, 16 is normalized to 1

Amlogic Proprietary and Confidential
Copyright © Amlogic. All rights reserved.

Table 10-2001 SRSHARP0_SR7_CLR_PRT_LUT22 0x515a

Bit(s)	R/W	Default	Description
31:28	RW	0	reg_sr7_clr_prct_lut183:color protection lut, 16 is normalized to 1
27:24	RW	0	reg_sr7_clr_prct_lut182:color protection lut, 16 is normalized to 1
23:20	RW	0	reg_sr7_clr_prct_lut181:color protection lut, 16 is normalized to 1
19:16	RW	0	reg_sr7_clr_prct_lut180:color protection lut, 16 is normalized to 1
15:12	RW	0	reg_sr7_clr_prct_lut179:color protection lut, 16 is normalized to 1
11:8	RW	0	reg_sr7_clr_prct_lut178:color protection lut, 16 is normalized to 1
7:4	RW	0	reg_sr7_clr_prct_lut177:color protection lut, 16 is normalized to 1
3:0	RW	0	reg_sr7_clr_prct_lut176:color protection lut, 16 is normalized to 1

Table 10-2002 SRSHARP0_SR7_CLR_PRT_LUT23 0x515b

Bit(s)	R/W	Default	Description
31:28	RW	0	reg_sr7_clr_prct_lut191:color protection lut, 16 is normalized to 1
27:24	RW	0	reg_sr7_clr_prct_lut190:color protection lut, 16 is normalized to 1
23:20	RW	0	reg_sr7_clr_prct_lut189:color protection lut, 16 is normalized to 1
19:16	RW	0	reg_sr7_clr_prct_lut188:color protection lut, 16 is normalized to 1
15:12	RW	0	reg_sr7_clr_prct_lut187:color protection lut, 16 is normalized to 1
11:8	RW	0	reg_sr7_clr_prct_lut186:color protection lut, 16 is normalized to 1
7:4	RW	0	reg_sr7_clr_prct_lut185:color protection lut, 16 is normalized to 1
3:0	RW	0	reg_sr7_clr_prct_lut184:color protection lut, 16 is normalized to 1

Table 10-2003 SRSHARP0_SR7_CLR_PRT_LUT24 0x515c

Bit(s)	R/W	Default	Description
31:28	RW	0	reg_sr7_clr_prct_lut199:color protection lut, 16 is normalized to 1
27:24	RW	0	reg_sr7_clr_prct_lut198:color protection lut, 16 is normalized to 1
23:20	RW	0	reg_sr7_clr_prct_lut197:color protection lut, 16 is normalized to 1
19:16	RW	0	reg_sr7_clr_prct_lut196:color protection lut, 16 is normalized to 1
15:12	RW	0	reg_sr7_clr_prct_lut195:color protection lut, 16 is normalized to 1
11:8	RW	0	reg_sr7_clr_prct_lut194:color protection lut, 16 is normalized to 1
7:4	RW	0	reg_sr7_clr_prct_lut193:color protection lut, 16 is normalized to 1
3:0	RW	0	reg_sr7_clr_prct_lut192:color protection lut, 16 is normalized to 1

Amlogic Proprietary and Confidential
Copyright © Amlogic. All rights reserved.

Table 10-2004 SRSHARP0_SR7_CLR_PRT_LUT25 0x515d

Bit(s)	R/W	Default	Description
31:28	RW	0	reg_sr7_clr_prct_lut207:color protection lut, 16 is normalized to 1
27:24	RW	0	reg_sr7_clr_prct_lut206:color protection lut, 16 is normalized to 1
23:20	RW	0	reg_sr7_clr_prct_lut205:color protection lut, 16 is normalized to 1
19:16	RW	0	reg_sr7_clr_prct_lut204:color protection lut, 16 is normalized to 1
15:12	RW	0	reg_sr7_clr_prct_lut203:color protection lut, 16 is normalized to 1
11:8	RW	0	reg_sr7_clr_prct_lut202:color protection lut, 16 is normalized to 1
7:4	RW	0	reg_sr7_clr_prct_lut201:color protection lut, 16 is normalized to 1
3:0	RW	0	reg_sr7_clr_prct_lut200:color protection lut, 16 is normalized to 1

Table 10-2005 SRSHARP0_SR7_CLR_PRT_LUT26 0x515e

Bit(s)	R/W	Default	Description
31:28	RW	0	reg_sr7_clr_prct_lut215:color protection lut, 16 is normalized to 1
27:24	RW	0	reg_sr7_clr_prct_lut214:color protection lut, 16 is normalized to 1
23:20	RW	0	reg_sr7_clr_prct_lut213:color protection lut, 16 is normalized to 1
19:16	RW	0	reg_sr7_clr_prct_lut212:color protection lut, 16 is normalized to 1
15:12	RW	0	reg_sr7_clr_prct_lut211:color protection lut, 16 is normalized to 1
11:8	RW	0	reg_sr7_clr_prct_lut210:color protection lut, 16 is normalized to 1
7:4	RW	0	reg_sr7_clr_prct_lut209:color protection lut, 16 is normalized to 1
3:0	RW	0	reg_sr7_clr_prct_lut208:color protection lut, 16 is normalized to 1

Table 10-2006 SRSHARP0_SR7_CLR_PRT_LUT27 0x515f

Bit(s)	R/W	Default	Description
31:28	RW	0	reg_sr7_clr_prct_lut223:color protection lut, 16 is normalized to 1
27:24	RW	0	reg_sr7_clr_prct_lut222:color protection lut, 16 is normalized to 1
23:20	RW	0	reg_sr7_clr_prct_lut221:color protection lut, 16 is normalized to 1
19:16	RW	0	reg_sr7_clr_prct_lut220:color protection lut, 16 is normalized to 1
15:12	RW	0	reg_sr7_clr_prct_lut219:color protection lut, 16 is normalized to 1
11:8	RW	0	reg_sr7_clr_prct_lut218:color protection lut, 16 is normalized to 1
7:4	RW	0	reg_sr7_clr_prct_lut217:color protection lut, 16 is normalized to 1
3:0	RW	0	reg_sr7_clr_prct_lut216:color protection lut, 16 is normalized to 1

Amlogic Proprietary and Confidential
Copyright © Amlogic. All rights reserved.

Table 10-2007 SRSHARP0_SR7_CLR_PRT_LUT28 0x5160

Bit(s)	R/W	Default	Description
31:28	RW	0	reg_sr7_clr_prct_lut231:color protection lut, 16 is normalized to 1
27:24	RW	0	reg_sr7_clr_prct_lut230:color protection lut, 16 is normalized to 1
23:20	RW	0	reg_sr7_clr_prct_lut229:color protection lut, 16 is normalized to 1
19:16	RW	0	reg_sr7_clr_prct_lut228:color protection lut, 16 is normalized to 1
15:12	RW	0	reg_sr7_clr_prct_lut227:color protection lut, 16 is normalized to 1
11:8	RW	0	reg_sr7_clr_prct_lut226:color protection lut, 16 is normalized to 1
7:4	RW	0	reg_sr7_clr_prct_lut225:color protection lut, 16 is normalized to 1
3:0	RW	0	reg_sr7_clr_prct_lut224:color protection lut, 16 is normalized to 1

Table 10-2008 SRSHARP0_SR7_CLR_PRT_LUT29 0x5161

Bit(s)	R/W	Default	Description
31:28	RW	0	reg_sr7_clr_prct_lut239:color protection lut, 16 is normalized to 1
27:24	RW	0	reg_sr7_clr_prct_lut238:color protection lut, 16 is normalized to 1
23:20	RW	0	reg_sr7_clr_prct_lut237:color protection lut, 16 is normalized to 1
19:16	RW	0	reg_sr7_clr_prct_lut236:color protection lut, 16 is normalized to 1
15:12	RW	0	reg_sr7_clr_prct_lut235:color protection lut, 16 is normalized to 1
11:8	RW	0	reg_sr7_clr_prct_lut234:color protection lut, 16 is normalized to 1
7:4	RW	0	reg_sr7_clr_prct_lut233:color protection lut, 16 is normalized to 1
3:0	RW	0	reg_sr7_clr_prct_lut232:color protection lut, 16 is normalized to 1

Table 10-2009 SRSHARP0_SR7_CLR_PRT_LUT30 0x5162

Bit(s)	R/W	Default	Description
31:28	RW	0	reg_sr7_clr_prct_lut247:color protection lut, 16 is normalized to 1
27:24	RW	0	reg_sr7_clr_prct_lut246:color protection lut, 16 is normalized to 1
23:20	RW	0	reg_sr7_clr_prct_lut245:color protection lut, 16 is normalized to 1
19:16	RW	0	reg_sr7_clr_prct_lut244:color protection lut, 16 is normalized to 1
15:12	RW	0	reg_sr7_clr_prct_lut243:color protection lut, 16 is normalized to 1
11:8	RW	0	reg_sr7_clr_prct_lut242:color protection lut, 16 is normalized to 1
7:4	RW	0	reg_sr7_clr_prct_lut241:color protection lut, 16 is normalized to 1
3:0	RW	0	reg_sr7_clr_prct_lut240:color protection lut, 16 is normalized to 1

Amlogic Proprietary and Confidential
Copyright © Amlogic. All rights reserved.

Table 10-2010 SRSHARP0_SR7_CLR_PRT_LUT31 0x5163

Bit(s)	R/W	Default	Description
31:28	RW	0	reg_sr7_clr_prct_lut255:color protection lut, 16 is normalized to 1
27:24	RW	0	reg_sr7_clr_prct_lut254:color protection lut, 16 is normalized to 1
23:20	RW	0	reg_sr7_clr_prct_lut253:color protection lut, 16 is normalized to 1
19:16	RW	0	reg_sr7_clr_prct_lut252:color protection lut, 16 is normalized to 1
15:12	RW	0	reg_sr7_clr_prct_lut251:color protection lut, 16 is normalized to 1
11:8	RW	0	reg_sr7_clr_prct_lut250:color protection lut, 16 is normalized to 1
7:4	RW	0	reg_sr7_clr_prct_lut249:color protection lut, 16 is normalized to 1
3:0	RW	0	reg_sr7_clr_prct_lut248:color protection lut, 16 is normalized to 1

Table 10-2011 SRSHARP1_SHARP_HVSIZE 0x5200

Bit(s)	R/W	Default	Description
28:16	R/W	0d1920	reg_pknr_hsize : . unsigned , default = 1920
12: 0	R/W	0d1080	reg_pknr_vsize : . unsigned , default = 1080

Table 10-2012 SRSHARP1_SHARP_HVBLANK_NUM 0x5201

Bit(s)	R/W	Default	Description
23: 16	R/W	0d8	reg_deband_hblank : . unsigned , default = 8
15: 8	R/W	0d20	reg_pknr_hblank_num : . unsigned , default = 20
7: 0	R/W	0d60	reg_pknr_vblank_num : . unsigned , default = 60

Table 10-2013 SRSHARP1_NR_GAUSSIAN_MODE 0x5202

Bit(s)	R/W	Default	Description
13□12	R/W	0d0	reg_nr_gau_cnorm : : Y adaptive coef norm, 0: 128, 1: 256, 2: 512, 3: 1024 .unsigned , default = 0
9□8	R/W	0d0	reg_nr_gau_cnorm : : C adaptive coef norm, 0: 128, 1: 256, 2: 512, 3: 1024 .unsigned , default = 0
5□4	R/W	0d1	reg_nr_gau_ymode : : 0 3x3 filter; 1: 5x5 filter, 2/3: adaptive coef .unsigned , default = 1
1□0	R/W	0d1	reg_nr_gau_cmode : : 0 3x3 filter; 1: 5x5 filter, 2/3: adaptive coef .unsigned , default = 1

Table 10-2014 SRSHARP1_PK_CON_2CIRHPGAIN_TH_RATE 0x5205

Bit(s)	R/W	Default	Description
31:24	R/W	0d25	reg_pk_cirhpcon2gain0 : : threshold0 of curve to map hpcon to hpgain for circle hp filter (all 8 direction same). 0~255.. unsigned , default = 25
23:16	R/W	0d60	reg_pk_cirhpcon2gain1 : : threshold1 of curve to map hpcon to hpgain for circle hp filter (all 8 direction same). 0~255.. unsigned , default = 60

Amlogic Proprietary and Confidential
Copyright © Amlogic. All rights reserved.

Bit(s)	R/W	Default	Description
15: 8	R/W	0d80	reg_pk_cirhpcon2gain5 : : rate0 (for hpcon<th0) of curve to map hpcon to hpgain for circle hp filter (all 8 direction same). 0~255.. unsigned , default = 80
7: 0	R/W	0d20	reg_pk_cirhpcon2gain6 : : rate1 (for hpcon>th1) of curve to map hpcon to hpgain for circle hp filter (all 8 direction same). 0~255.. unsigned , default = 20

Table 10-2015 SRSHARP1_PK_CON_2CIRHPGAIN_LIMIT 0x5206

Bit(s)	R/W	Default	Description
31:24	R/W	0d96	reg_pk_cirhpcon2gain2 : : level limit(for hpcon<th0) of curve to map hpcon to hpgain for circle hp filter (all 8 direction same). 0~255.. unsigned , default = 96
23:16	R/W	0d96	reg_pk_cirhpcon2gain3 : : level limit(for th0<hpcon<th1) of curve to map hpcon to hpgain for circle hp filter (all 8 direction same). 0~255.. unsigned , default = 96
15: 8	R/W	0d5	reg_pk_cirhpcon2gain4 : : level limit(for hpcon>th1) of curve to map hpcon to hpgain for circle hp filter (all 8 direction same). 0~255.. unsigned , default = 5

Table 10-2016 SRSHARP1_PK_CON_2CIRBPGAIN_TH_RATE 0x5207

Bit(s)	R/W	Default	Description
31:24	R/W	0d20	reg_pk_cirbpcon2gain0 : : threshold0 of curve to map bpcon to bpgain for circle bp filter (all 8 direction same). 0~255.. unsigned , default = 20
23:16	R/W	0d50	reg_pk_cirbpcon2gain1 : : threshold1 of curve to map bpcon to bpgain for circle bp filter (all 8 direction same).. unsigned , default = 50
15: 8	R/W	0d50	reg_pk_cirbpcon2gain5 : : rate0 (for bpcon<th0) of curve to map bpcon to bpgain for circle bp filter (all 8 direction same). 0~255.. unsigned , default = 50
7: 0	R/W	0d25	reg_pk_cirbpcon2gain6 : : rate1 (for bpcon>th1) of curve to map bpcon to bpgain for circle bp filter (all 8 direction same). 0~255.. unsigned , default = 25

Table 10-2017 SRSHARP1_PK_CON_2CIRBPGAIN_LIMIT 0x5208

Bit(s)	R/W	Default	Description
31:24	R/W	0d40	reg_pk_cirbpcon2gain2 : : level limit(for bpcon<th0) of curve to map bpcon to bpgain for circle bp filter (all 8 direction same). 0~255.. unsigned , default = 40
23:16	R/W	0d40	reg_pk_cirbpcon2gain3 : : level limit(for th0<bpcon<th1) of curve to map bpcon to bpgain for circle bp filter (all 8 direction same). 0~255.. unsigned , default = 40
15: 8	R/W	0d5	reg_pk_cirbpcon2gain4 : : level limit(for bpcon>th1) of curve to map bpcon to bpgain for circle bp filter (all 8 direction same). 0~255.. unsigned , default = 5

Table 10-2018 SRSHARP1_PK_CON_2DRTHPGAIN_TH_RATE 0x5209

Bit(s)	R/W	Default	Description
31:24	R/W	0d25	reg_pk_drthpcon2gain0 : : threshold0 of curve to map hpcon to hpgain for directional hp filter (best direction). 0~255.. unsigned , default = 25
23:16	R/W	0d60	reg_pk_drthpcon2gain1 : : threshold1 of curve to map hpcon to hpgain for directional hp filter (best direction). 0~255.. unsigned , default = 60

Amlogic Proprietary and Confidential
Copyright © Amlogic. All rights reserved.

Bit(s)	R/W	Default	Description
15: 8	R/W	0d80	reg_pk_drthpcon2gain5 : : rate0 (for hpcon<th0) of curve to map hpcon to hpgain for directional hp filter (best direction). 0~255.. unsigned , default = 80
7: 0	R/W	0d20	reg_pk_drthpcon2gain6 : : rate1 (for hpcon>th1) of curve to map hpcon to hpgain for directional hp filter (best direction). 0~255.. unsigned , default = 20

Table 10-2019 SRSHARP1_PK_CON_2DRTHPGAIN_LIMIT 0x520a

Bit(s)	R/W	Default	Description
31:24	R/W	0d90	reg_pk_drthpcon2gain2 : : level limit(for hpcon<th0) of curve to map hpcon to hpgain for directional hp filter (best direction).. unsigned , default = 90
23:16	R/W	0d96	reg_pk_drthpcon2gain3 : : level limit(for th0<hpcon<th1) of curve to map hpcon to hpgain for directional hp filter (best direction). 0~255.. unsigned , default = 96
15: 8	R/W	0d5	reg_pk_drthpcon2gain4 : : level limit(for hpcon>th1) of curve to map hpcon to hpgain for directional hp filter (best direction). 0~255.. unsigned , default = 5

Table 10-2020 SRSHARP1_PK_CON_2DRTBPGAIN_TH_RATE 0x520b

Bit(s)	R/W	Default	Description
31:24	R/W	0d20	reg_pk_drtbpcon2gain0 : : threshold0 of curve to map bpcon to bpgain for directional bp filter (best direction). 0~255.. unsigned , default = 20
23:16	R/W	0d50	reg_pk_drtbpcon2gain1 : : threshold1 of curve to map bpcon to bpgain for directional bp filter (best direction). 0~255.. unsigned , default = 50
15: 8	R/W	0d50	reg_pk_drtbpcon2gain5 : : rate0 (for bpcon<th0) of curve to map bpcon to bpgain for directional bp filter (best direction). 0~255.. unsigned , default = 50
7: 0	R/W	0d25	reg_pk_drtbpcon2gain6 : : rate1 (for bpcon>th1) of curve to map bpcon to bpgain for directional bp filter (best direction). 0~255.. unsigned , default = 25

Table 10-2021 SRSHARP1_PK_CON_2DRTBPGAIN_LIMIT 0x520c

Bit(s)	R/W	Default	Description
31:24	R/W	0d40	reg_pk_drtbpcon2gain2 : : level limit(for bpcon<th0) of curve to map bpcon to bpgain for directional bp filter (best direction). 0~255.. unsigned , default = 40
23:16	R/W	0d40	reg_pk_drtbpcon2gain3 : : level limit(for th0<bpcon<th1) of curve to map bpcon to bpgain for directional bp filter (best direction). 0~255.. unsigned , default = 40
15: 8	R/W	0d5	reg_pk_drtbpcon2gain4 : : level limit(for bpcon>th1) of curve to map bpcon to bpgain for directional bp filter (best direction). 0~255.. unsigned , default = 5

Table 10-2022 SRSHARP1_PK_CIRFB_LPF_MODE 0x520d

Bit(s)	R/W	Default	Description
29:28	R/W	0d1	reg_cirhp_horz_mode : : no horz filter on HP; 1: [1 2 1]/4; 2/3: [1 2 2 2 1]/8 . unsigned , default = 1
25:24	R/W	0d1	reg_cirhp_vert_mode : : no vert filter on HP; 1: [1 2 1]/4; 2/3: [1 2 2 2 1]/8 . unsigned , default = 1
21:20	R/W	0d1	reg_cirhp_diag_mode : : filter on HP; 1: [1 2 1]/4; . unsigned , default = 1

Amlogic Proprietary and Confidential
Copyright © Amlogic. All rights reserved.

Bit(s)	R/W	Default	Description
13:12	R/W	0d1	reg_cirbp_horz_mode : : no horz filter on BP; 1: [1 2 1]/4; 2/3: [1 2 2 2 1]/8 . unsigned , default = 1
9: 8	R/W	0d1	reg_cirbp_vert_mode : : no vert filter on BP; 1: [1 2 1]/4; 2/3: [1 2 2 2 1]/8 . unsigned , default = 1
5: 4	R/W	0d1	reg_cirbp_diag_mode : : filter on BP; 1: [1 2 1]/4; . unsigned , default = 1

Table 10-2023 SRSHARP1_PK_DRTFB_LPF_MODE 0x520e

Bit(s)	R/W	Default	Description
29:28	R/W	0d1	reg_drthp_horz_mode : : no horz filter on HP; 1: [1 2 1]/4; 2/3: [1 2 2 2 1]/8 2 . unsigned , default = 1
25:24	R/W	0d1	reg_drthp_vert_mode : : no vert filter on HP; 1: [1 2 1]/4; 2/3: [1 2 2 2 1]/8 2 . unsigned , default = 1
21:20	R/W	0d1	reg_drthp_diag_mode : : filter on HP; 1: [1 2 1]/4; 1 . unsigned , default = 1
13:12	R/W	0d1	reg_drtbp_horz_mode : : no horz filter on BP; 1: [1 2 1]/4; 2/3: [1 2 2 2 1]/8 2 . unsigned , default = 1
9: 8	R/W	0d1	reg_drtbp_vert_mode : : no vert filter on BP; 1: [1 2 1]/4; 2/3: [1 2 2 2 1]/8 2 . unsigned , default = 1
5: 4	R/W	0d1	reg_drtbp_diag_mode : : filter on BP; 1: [1 2 1]/4; 1 . unsigned , default = 1

Table 10-2024 SRSHARP1_PK_CIRFB_HP_CORING 0x520f

Bit(s)	R/W	Default	Description
21:16	R/W	0d4	reg_cirhp_horz_core : : coring of HP for Horz . unsigned , default = 4
13: 8	R/W	0d4	reg_cirhp_vert_core : : coring of HP for Vert . unsigned , default = 4
5: 0	R/W	0d4	reg_cirhp_diag_core : : coring of HP for Diag . unsigned , default = 4

Table 10-2025 SRSHARP1_PK_CIRFB_BP_CORING 0x5210

Bit(s)	R/W	Default	Description
21:16	R/W	0d4	reg_cirbp_horz_core : : coring of HP for Horz . unsigned , default = 4
13: 8	R/W	0d4	reg_cirbp_vert_core : : coring of HP for Vert . unsigned , default = 4
5: 0	R/W	0d4	reg_cirbp_diag_core : : coring of HP for Diag . unsigned , default = 4

Table 10-2026 SRSHARP1_PK_DRTFB_HP_CORING 0x5211

Bit(s)	R/W	Default	Description
21:16	R/W	0d4	reg_drthp_horz_core : : coring of HP for Horz . unsigned , default = 4
13: 8	R/W	0d4	reg_drthp_vert_core : : coring of HP for Vert . unsigned , default = 4
5: 0	R/W	0d4	reg_drthp_diag_core : : coring of HP for Diag . unsigned , default = 4

Amlogic Proprietary and Confidential
Copyright © Amlogic. All rights reserved.

Table 10-2027 SRSHARP1_PK_DRTFB_BP_CORING 0x5212

Bit(s)	R/W	Default	Description
21:16	R/W	0d4	reg_drtbp_horz_core : : coring of HP for Horz . unsigned , default = 4
13: 8	R/W	0d4	reg_drtbp_vert_core : : coring of HP for Vert . unsigned , default = 4
5: 0	R/W	0d4	reg_drtbp_diag_core : : coring of HP for Diag . unsigned , default = 4

Table 10-2028 SRSHARP1_PK_CIRFB_BLEND_GAIN 0x5213

Bit(s)	R/W	Default	Description
31:28	R/W	0d8	reg_hp_cir_hgain : : normalized 8 as '1' . unsigned , default = 8
27:24	R/W	0d8	reg_hp_cir_vgain : : normalized 8 as '1' . unsigned , default = 8
23:20	R/W	0d8	reg_hp_cir_dgain : : normalized 8 as '1' . unsigned , default = 8
15:12	R/W	0d8	reg_bp_cir_hgain : : normalized 8 as '1' . unsigned , default = 8
11: 8	R/W	0d8	reg_bp_cir_vgain : : normalized 8 as '1' . unsigned , default = 8
7: 4	R/W	0d8	reg_bp_cir_dgain : : normalized 8 as '1' . unsigned , default = 8

Table 10-2029 SRSHARP1_NR_ALPY_SSD_GAIN_OFST 0x5214

Bit(s)	R/W	Default	Description
15: 8	R/W	0d16	reg_nr_alp0_ssd_gain : : gain to max ssd normalized 16 as '1' . unsigned , default = 16
5: 0	R/W	0x0	reg_nr_alp0_ssd_ofst : : offset to ssd before dividing to min_err . signed , default = -2

Table 10-2030 SRSHARP1_NR_ALP0Y_ERR2CURV_TH_RATE 0x5215

Bit(s)	R/W	Default	Description
31:24	R/W	0d10	reg_nr_alp0_minerr_ypar0 : : threshold0 of curve to map mierr to alp0 for luma channel, this will be set value of flat region mierr that no need blur. 0~255.. unsigned , default = 10
23:16	R/W	0d25	reg_nr_alp0_minerr_ypar1 : : threshold1 of curve to map mierr to alp0 for luma channel,this will be set value of texture region mierr that can not blur.. unsigned , default = 25
15: 8	R/W	0d80	reg_nr_alp0_minerr_ypar5 : : rate0 (for mierr<th0) of curve to map mierr to alp0 for luma channel. the larger of the value, the deep of the slope. 0~255.. unsigned , default = 80
7: 0	R/W	0d64	reg_nr_alp0_minerr_ypar6 : : rate1 (for mierr>th1) of curve to map mierr to alp0 for luma channel. the larger of the value, the deep of the slope. 0~255.. unsigned , default = 64

Amlogic Proprietary and Confidential
Copyright © Amlogic. All rights reserved.

Table 10-2031 SRSHARP1_NR_ALP0Y_ERR2CURV_LIMIT 0x5216

Bit(s)	R/W	Default	Description
31:24	R/W	0d63	reg_nr_alp0_minerr_ypar2 : : level limit(for mierr<th0) of curve to map mierr to alp0 for luma channel, this will be set to alp0 that we can do for flat region. 0~255.. unsigned , default = 63
23:16	R/W	0d0	reg_nr_alp0_minerr_ypar3 : : level limit(for th0<mierr<th1) of curve to map mierr to alp0 for luma channel, this will be set to alp0 that we can do for misc region. 0~255.. unsigned , default = 0
15: 8	R/W	0d63	reg_nr_alp0_minerr_ypar4 : : level limit(for mierr>th1) of curve to map mierr to alp0 for luma channel, this will be set to alp0 that we can do for texture region. 0~255.. unsigned , default = 63

Table 10-2032 SRSHARP1_NR_ALP0C_ERR2CURV_TH_RATE 0x5217

Bit(s)	R/W	Default	Description
31:24	R/W	0d10	reg_nr_alp0_minerr_cpar0 : : threshold0 of curve to map mierr to alp0 for chroma channel, this will be set value of flat region mierr that no need blur.. unsigned , default = 10
23:16	R/W	0d25	reg_nr_alp0_minerr_cpar1 : : threshold1 of curve to map mierr to alp0 for chroma channel,this will be set value of texture region mierr that can not blur.. unsigned , default = 25
15: 8	R/W	0d80	reg_nr_alp0_minerr_cpar5 : : rate0 (for mierr<th0) of curve to map mierr to alp0 for chroma channel. the larger of the value, the deep of the slope. 0~255.. unsigned , default = 80
7: 0	R/W	0d64	reg_nr_alp0_minerr_cpar6 : : rate1 (for mierr>th1) of curve to map mierr to alp0 for chroma channel. the larger of the value, the deep of the slope. 0~255.. unsigned , default = 64

Table 10-2033 SRSHARP1_NR_ALP0C_ERR2CURV_LIMIT 0x5218

Bit(s)	R/W	Default	Description
31:24	R/W	0d63	reg_nr_alp0_minerr_cpar2 : : level limit(for mierr<th0) of curve to map mierr to alp0 for chroma channel, this will be set to alp0 that we can do for flat region. 0~255.. unsigned , default = 63
23:16	R/W	0d0	reg_nr_alp0_minerr_cpar3 : : level limit(for th0<mierr<th1) of curve to map mierr to alp0 for chroma channel, this will be set to alp0 that we can do for misc region. 0~255.. unsigned , default = 0
15: 8	R/W	0d63	reg_nr_alp0_minerr_cpar4 : : level limit(for mierr>th1) of curve to map mierr to alp0 for chroma channel, this will be set to alp0 that we can do for texture region. 0~255.. unsigned , default = 63

Table 10-2034 SRSHARP1_NR_ALP0_MIN_MAX 0x5219

Bit(s)	R/W	Default	Description
29:24	R/W	0d2	reg_nr_alp0_ymin : : normalized to 64 as '1' . unsigned , default = 2
21:16	R/W	0d63	reg_nr_alp0_ymax : : normalized to 64 as '1' . unsigned , default = 63
13: 8	R/W	0d2	reg_nr_alp0_cmin : : normalized to 64 as '1' . unsigned , default = 2
5: 0	R/W	0d63	reg_nr_alp0_cmax : : normalized to 64 as '1' . unsigned , default = 63

Amlogic Proprietary and Confidential
Copyright © Amlogic. All rights reserved.

Table 10-2035 SRSHARP1_NR_ALP1_MIERR_CORING 0x521a

Bit(s)	R/W	Default	Description
16	R/W	0d0	reg_nr_alp1_maxerr_mode : : 0 max err; 1: xerr . unsigned , default = 0
13: 8	R/W	0d0	reg_nr_alp1_core_rate : : normalized 64 as "1" . unsigned , default = 0
5: 0	R/W	0d3	reg_nr_alp1_core_ofst : : normalized 64 as "1" . signed , default = 3

Table 10-2036 SRSHARP1_NR_ALP1_ERR2CURV_TH_RATE 0x521b

Bit(s)	R/W	Default	Description
31:24	R/W	0d0	reg_nr_alp1_minerr_par0 : : threshold0 of curve to map mierr to alp1 for luma/chroma channel, this will be set value of flat region mierr that no need directional NR. 0~255.. unsigned , default = 0
23:16	R/W	0d24	reg_nr_alp1_minerr_par1 : : threshold1 of curve to map mierr to alp1 for luma/chroma channel,this will be set value of texture region mierr that can not do directional NR. 0~255.. unsigned , default = 24
15: 8	R/W	0d0	reg_nr_alp1_minerr_par5 : : rate0 (for mierr<th0) of curve to map mierr to alp1 for luma/chroma channel. the larger of the value, the deep of the slope.. unsigned , default = 0
7: 0	R/W	0d20	reg_nr_alp1_minerr_par6 : : rate1 (for mierr>th1) of curve to map mierr to alp1 for luma/chroma channel. the larger of the value, the deep of the slope. 0~255. unsigned , default = 20

Table 10-2037 SRSHARP1_NR_ALP1_ERR2CURV_LIMIT 0x521c

Bit(s)	R/W	Default	Description
31:24	R/W	0d0	reg_nr_alp1_minerr_par2 : : level limit(for mierr<th0) of curve to map mierr to alp1 for luma/chroma channel, this will be set to alp1 that we can do for flat region. 0~255.. unsigned , default = 0
23:16	R/W	0d16	reg_nr_alp1_minerr_par3 : : level limit(for th0<mierr<th1) of curve to map mierr to alp1 for luma/chroma channel, this will be set to alp1 that we can do for misc region. 0~255.. unsigned , default = 16
15: 8	R/W	0d63	reg_nr_alp1_minerr_par4 : : level limit(for mierr>th1) of curve to map mierr to alp1 for luma/chroma channel, this will be set to alp1 that we can do for texture region. 0~255.255 before. unsigned , default = 63

Table 10-2038 SRSHARP1_NR_ALP1_MIN_MAX 0x521d

Bit(s)	R/W	Default	Description
29:24	R/W	0d0	reg_nr_alp1_ymin : : normalized to 64 as '1' . unsigned , default = 0
21:16	R/W	0d63	reg_nr_alp1_ymax : : normalized to 64 as '1' . unsigned , default = 63
13: 8	R/W	0d0	reg_nr_alp1_cmin : : normalized to 64 as '1' . unsigned , default = 0
5: 0	R/W	0d63	reg_nr_alp1_cmax : : normalized to 64 as '1' . unsigned , default = 63

Amlogic Proprietary and Confidential
Copyright © Amlogic. All rights reserved.

Table 10-2039 SRSHARP1_PK_ALP2_MIERR_CORING 0x521e

Bit(s)	R/W	Default	Description
16	R/W	0d1	reg_pk_alp2_maxerr_mode : : 0 max err; 1: xerr . unsigned , default = 1
13: 8	R/W	0d13	reg_pk_alp2_core_rate : : normalized 64 as "1" . unsigned , default = 13
5: 0	R/W	0d1	reg_pk_alp2_core_ofst : : normalized 64 as "1" . signed , default = 1

Table 10-2040 SRSHARP1_PK_ALP2_ERR2CURV_TH_RATE 0x521f

Bit(s)	R/W	Default	Description
31:24	R/W	0d0	reg_pk_alp2_minerr_par0 : : threshold0 of curve to map mierr to alp2 for luma channel, this will be set value of flat region mierr that no need peaking.. unsigned , default = 0
23:16	R/W	0d24	reg_pk_alp2_minerr_par1 : : threshold1 of curve to map mierr to alp2 for luma channel,this will be set value of texture region mierr that can not do peaking. 0~255.. unsigned , default = 24
15: 8	R/W	0d0	reg_pk_alp2_minerr_par5 : : rate0 (for mierr<th0) of curve to map mierr to alp2 for luma channel. the larger of the value, the deep of the slope. 0~255.. unsigned , default = 0
7: 0	R/W	0d20	reg_pk_alp2_minerr_par6 : : rate1 (for mierr>th1) of curve to map mierr to alp2 for luma channel. the larger of the value, the deep of the slope. 0~255.. unsigned , default = 20

Table 10-2041 SRSHARP1_PK_ALP2_ERR2CURV_LIMIT 0x5220

Bit(s)	R/W	Default	Description
31:24	R/W	0d0	reg_pk_alp2_minerr_par2 : : level limit(for mierr<th0) of curve to map mierr to alp2 for luma channel, this will be set to alp2 that we can do for flat region. 0~255.. unsigned , default = 0
23:16	R/W	0d16	reg_pk_alp2_minerr_par3 : : level limit(for th0<mierr<th1) of curve to map mierr to alp2 for luma channel, this will be set to alp2 that we can do for misc region. 0~255.. unsigned , default = 16
15: 8	R/W	0d63	reg_pk_alp2_minerr_par4 : : level limit(for mierr>th1) of curve to map mierr to alp2 for luma channel, this will be set to alp2 that we can do for texture region. 0~255. default = 63;. unsigned , default = 255

Table 10-2042 SRSHARP1_PK_ALP2_MIN_MAX 0x5221

Bit(s)	R/W	Default	Description
13: 8	R/W	0d0	reg_pk_alp2_min : : normalized to 64 as '1' . unsigned , default = 0
5: 0	R/W	0d63	reg_pk_alp2_max : : normalized to 64 as '1' . unsigned , default = 63

Amlogic Proprietary and Confidential
Copyright © Amlogic. All rights reserved.

Table 10-2043 SRSHARP1_PK_FINALGAIN_HP_BP 0x5222

Bit(s)	R/W	Default	Description
17: 16	R/W	0d0	reg_final_gain_rs : : right shift bits for the gain normalization, 0 normal to 32 as 1; 1 normal to 64 as 1; -2 normal to 8 as 1; -1 normal to 16 as 1 . signed , default = 0
15: 8	R/W	0d40	reg_hp_final_gain : : gain to highpass boost result (including directional/circle blending), normalized 32 as '1', 0~255. 1.25 * 32. unsigned , default = 40
7: 0	R/W	0d30	reg_bp_final_gain : : gain to bandpass boost result (including directional/circle blending), normalized 32 as '1', 0~255. 1.25 * 32. unsigned , default = 30

Table 10-2044 SRSHARP1_PK_OS_HORZ_CORE_GAIN 0x5223

Bit(s)	R/W	Default	Description
31:24	R/W	0d8	reg_pk_os_hsidecore : : side coring (not to current pixel) to adaptive overshoot margin in horizontal direction. the larger of this value, the less overshoot admitted 0~255;. unsigned , default = 8
23:16	R/W	0d20	reg_pk_os_hsidegain : : side gain (not to current pixel) to adaptive overshoot margin in horizontal direction. normalized to 32 as '1'. 0~255;. unsigned , default = 20
15: 8	R/W	0d2	reg_pk_os_hmidcore : : midd coring (to current pixel) to adaptive overshoot margin in horizontal direction. the larger of this value, the less overshoot admitted 0~255;. unsigned , default = 2
7: 0	R/W	0d20	reg_pk_os_hmidgain : : midd gain (to current pixel) to adaptive overshoot margin in horizontal direction. normalized to 32 as '1'. 0~255;. unsigned , default = 20

Table 10-2045 SRSHARP1_PK_OS_VERT_CORE_GAIN 0x5224

Bit(s)	R/W	Default	Description
31:24	R/W	0d8	reg_pk_os_vsidecore : : side coring (not to current pixel) to adaptive overshoot margin in vertical direction. the larger of this value, the less overshoot admitted 0~255;. unsigned , default = 8
23:16	R/W	0d20	reg_pk_os_vsidegain : : side gain (not to current pixel) to adaptive overshoot margin in vertical direction. normalized to 32 as '1'. 0~255;. unsigned , default = 20
15: 8	R/W	0d2	reg_pk_os_vmidcore : : midd coring (to current pixel) to adaptive overshoot margin in vertical direction. the larger of this value, the less overshoot admitted 0~255;. unsigned , default = 2
7: 0	R/W	0d20	reg_pk_os_vmidgain : : midd gain (to current pixel) to adaptive overshoot margin in vertical direction. normalized to 32 as '1'. 0~255;. unsigned , default = 20

Table 10-2046 SRSHARP1_PK_OS_ADPT_MISC 0x5225

Bit(s)	R/W	Default	Description
31:24	R/W	0d40	reg_pk_os_minerr_core : : coring to minerr for adaptive overshoot margin. the larger of this value, the less overshoot admitted 0~255;. unsigned , default = 40
23:16	R/W	0d6	reg_pk_os_minerr_gain : : gain to minerr based adaptive overshoot margin. normalized to 64 as '1'. 0~255;. unsigned , default = 6

Amlogic Proprietary and Confidential
Copyright © Amlogic. All rights reserved.

Bit(s)	R/W	Default	Description
15: 8	R/W	0d200	reg_pk_os_adpt_max : : maximum limit adaptive overshoot margin (4x). 0~255; . unsigned , default = 200
7: 0	R/W	0d20	reg_pk_os_adpt_min : : minimun limit adaptive overshoot margin (1x). 0~255; . unsigned , default = 20

Table 10-2047 SRSHARP1_PK_OS_STATIC 0x5226

Bit(s)	R/W	Default	Description
29:28	R/W	0d2	reg_pk_osh_mode : : 0~3: (2x+1) window in H direction . unsigned , default = 2
25:24	R/W	0d2	reg_pk_osv_mode : : 0~3: (2x+1) window in V direction . unsigned , default = 2
21:12	R/W	0d200	reg_pk_os_down : : static negative overshoot margin. 0~1023; . unsigned , default = 200
9: 0	R/W	0d200	reg_pk_os_up : : static positive overshoot margin. 0~1023; . unsigned , default = 200

Table 10-2048 SRSHARP1_PK_NR_ENABLE 0x5227

Bit(s)	R/W	Default	Description
3: 2	R/W	0d0	reg_3d_mode : , 0: no 3D; 1: L/R; 2: T/B; 3: horizontal interleaved, dft = 0 //. unsigned , default = 0
1	R/W	0d1	reg_pk_en : . unsigned , default = 1
0	R/W	0d1	reg_nr_en : . unsigned , default = 1

Table 10-2049 SRSHARP1_PK_DRT_SAD_MISC 0x5228

Bit(s)	R/W	Default	Description
31:24	R/W	0d24	reg_pk_sad_ver_gain : : gain to sad[4], 16 normalized to "1"; . unsigned , default = 24
23:16	R/W	0d24	reg_pk_sad_hor_gain : : gain to sad[0], 16 normalized to "1"; . unsigned , default = 24
10: 9	R/W	0d0	reg_pk_bias_diag : : bias towards diag . unsigned , default = 0
4: 0	R/W	0d24	reg_pk_drt_force : : force direction of drt peaking filter, h2b: 0:hp drt force, 1: bp drt force; 2: bp+hp drt force, 3: no force;. unsigned , default = 24

Table 10-2050 SRSHARP1_NR_TI_DNLP_BLEND 0x5229

Bit(s)	R/W	Default	Description
10: 8	R/W	0d4	reg_dnlp_input_mode : : dnlp input options. 0: org_y; 1: gau_y; 2: gauadp_y; 3: edgadplpf_y; 4: nr_y;5: lti_y; 6: pk_y (before os);7: pk_y (after os). unsigned , default = 4
3: 2	R/W	0d1	reg_nr_cti_blend_mode : : blend mode of nr and lti result: 0: nr; 1:cti; 2: (nr+cti)/2; 3:cti + dlt_nr . unsigned , default = 1
1: 0	R/W	0d1	reg_nr_lti_blend_mode : : blend mode of nr and lti result: 0: nr; 1:lti; 2: (nr+lti)/2; 3:lti + dlt_nr . unsigned , default = 1

Amlogic Proprietary and Confidential
Copyright © Amlogic. All rights reserved.

Table 10-2051 SRSHARP1_TI_DIR_CORE_ALPHA 0x522a

Bit(s)	R/W	Default	Description
29:24	R/W	0d10	reg_adp_lti_dir_alp_core_ofst : : ofst to min_err, alpha = (min_err - (max_err-min_err)*rate + ofst)/max_err*64; dft=10. unsigned , default = 10
19:16	R/W	0d0	reg_adp_lti_dir_alp_core_rate : : ofset to min_err, alpha = (min_err - (max_err-min_err)*rate + ofst)/max_err*64; dft=0/32. unsigned , default = 0
13: 8	R/W	0d0	reg_adp_lti_dir_alpmin : : min value of alpha, alpha = (min_err+x +ofst)/max_ err*64; dft=10 . unsigned , default = 0
5: 0	R/W	0d63	reg_adp_lti_dir_alpmax : : max value of alpha, alpha = (min_err+x +ofst)/max_ err*64; dft=63 . unsigned , default = 63

Table 10-2052 SRSHARP1_CTI_DIR_ALPHA 0x522b

Bit(s)	R/W	Default	Description
29:24	R/W	0d5	reg_adp_cti_dir_alp_core_ofst : : ofst to min_err, alpha = (min_err - (max_err-min_err)*rate + ofst)/max_err*64; dft=10. unsigned , default = 5
19:16	R/W	0d0	reg_adp_cti_dir_alp_core_rate : : ofset to min_err, alpha = (min_err - (max_err-min_err)*rate + ofst)/max_err*64; dft=0/32. unsigned , default = 0
13: 8	R/W	0d0	reg_adp_cti_dir_alpmin : : min value of alpha, alpha = (min_err +x+ofst)/max_ err*64; dft=10 . unsigned , default = 0
5: 0	R/W	0d63	reg_adp_cti_dir_alpmax : : max value of alpha, alpha = (min_err +x+ofst)/max_ err*64; dft=63 . unsigned , default = 63

Table 10-2053 SRSHARP1_LTI_CTI_DF_GAIN 0x522c

Bit(s)	R/W	Default	Description
29:24	R/W	0d16	reg_adp_lti_hdf_gain : : 8 normalized to "1"; default = 16 . unsigned , default = 16
21:16	R/W	0d12	reg_adp_lti_vdf_gain : : 8 normalized to "1"; default = 12 . unsigned , default = 12
13: 8	R/W	0d16	reg_adp_cti_hdf_gain : : 8 normalized to "1"; default = 16 . unsigned , default = 16
5: 0	R/W	0d12	reg_adp_cti_vdf_gain : : 8 normalized to "1"; default = 12 . unsigned , default = 12

Table 10-2054 SRSHARP1_LTI_CTI_DIR_AC_DBG 0x522d

Bit(s)	R/W	Default	Description
30	R/W	0d1	reg_adp_lti_dir_lpf : : 0: no lpf; 1: [1 2 2 2 1]/8 lpf . unsigned , default = 1
28	R/W	0d0	reg_adp_lti_dir_difmode : : 0: y_dif; 1: y_dif + (u_dif+v_dif)/2; . unsigned , default = 0
26	R/W	0d1	reg_adp_cti_dir_lpf : : 0: no lpf; 1: [1 2 2 2 1]/8 lpf dft=1 . unsigned , default = 1
25:24	R/W	0d0	reg_adp_cti_dir_difmode : : 0: (u_dif+v_dif); 1: y_dif/2 + (u_dif+v_dif)*3/4; 2: y_dif + (u_dif+v_dif)/2; 3: y_dif*2 (not recomended). unsigned , default = 0
23:22	R/W	0d3	reg_adp_hvlti_dcblend_mode : : 0: hlti_dc; 1:vlti_dc; 2: avg 3; blend on alpha . unsigned , default = 3
21:20	R/W	0d3	reg_adp_hvcti_dcblend_mode : : 0: hcti_dc; 1:vcti_dc; 2: avg 3; blend on alpha . unsigned , default = 3

Amlogic Proprietary and Confidential
Copyright © Amlogic. All rights reserved.

Bit(s)	R/W	Default	Description
19:18	R/W	0d3	reg_adp_hvlti_acblend_mode : : hlti_ac; 1:vlti_ac; 2: add 3;:adaptive to alpha . unsigned , default = 3
17:16	R/W	0d3	reg_adp_hvcti_acblend_mode : : hcti_ac; 1:vcti_ac; 2: add 3;: adaptive to alpha . unsigned , default = 3
14:12	R/W	0d0	reg_adp_hlti_debug : , for hlti debug, default = 0 . unsigned , default = 0
10: 8	R/W	0d0	reg_adp_vlti_debug : , for vlti debug, default = 0 . unsigned , default = 0
6: 4	R/W	0d0	reg_adp_hcti_debug : , for hcti debug, default = 0 . unsigned , default = 0
2: 0	R/W	0d0	reg_adp_vcti_debug : , for vcti debug, default = 0 . unsigned , default = 0

Table 10-2055 SRSHARP1_HCTI_FLT_CLP_DC 0x522e

Bit(s)	R/W	Default	Description
28	R/W	0d1	reg_adp_hcti_en : , 0: no cti, 1: new cti, default = 1 . unsigned , default = 1
27:26	R/W	0d3	reg_adp_hcti_vdn_flt : , 0: no lpf; 1:[0,2,4,2,0], 2 : [1 2 2 2 1]/8 3:[1 0 2 0 1]/4, default = 3 . unsigned , default = 3
25:24	R/W	0d2	reg_adp_hcti_hdn_flt : , 0: no lpf; 1:[0, 0, 0, 4, 8, 4, 0, 0, 0], 2:[0, 0, 2, 4, 4, 4, 2, 0, 0], 3: [1, 2, 2, 2, 2, 2, 2, 2, 1], default = 2. unsigned , default = 2
23:22	R/W	0d3	reg_adp_hcti_ddn_flt : , 0: no lpf; 1:[0,2,4,2,0], 2 : [1 2 2 2 1]/8 3:[1 0 2 0 1]/4, default = 3 . unsigned , default = 3
21:20	R/W	0d2	reg_adp_hcti_lpf0_flt : , 0:no filter; 1:sigma=0.75, 2: sigma = 1.0, 3: sigma = 1.5, default = 2 . unsigned , default = 2
19:18	R/W	0d2	reg_adp_hcti_lpf1_flt : , 0:no filter; 1:sigma= 2.0, 2: sigma = 3.0, 3: sigma = 4.0, default = 2 . unsigned , default = 2
17:16	R/W	0d2	reg_adp_hcti_lpf2_flt : , 0:no filter; 1:sigma=5.0, 2: sigma = 9.0, 3: sigma = 13.0, default = 2 . unsigned , default = 2
15:12	R/W	0d7	reg_adp_hcti_hard_clp_win : , window size, 0~8, default = 7 . unsigned , default = 7
11: 8	R/W	0d3	reg_adp_hcti_hard_win_min : , window size, 0~8, default = 3 . unsigned , default = 3
4	R/W	0d1	reg_adp_hcti_clp_mode : , 0: hard clip, 1: adaptive clip, default = 1 . unsigned , default = 1
2: 0	R/W	0d0	reg_adp_hcti_dc_mode : , 0:dn, 1:lpf0, 2:lpf1, 3:lpf2, 4: lpf3: 5: vdn result; 6/7: org, default = 0 . unsigned , default = 0

Table 10-2056 SRSHARP1_HCTI_BST_GAIN 0x522f

Bit(s)	R/W	Default	Description
31:24	R/W	0d80	reg_adp_hcti_bst_gain0 : : gain of the bandpass 0 (lpf1-lpf2)- LBP, default = 80 . unsigned , default = 80
23:16	R/W	0d96	reg_adp_hcti_bst_gain1 : : gain of the bandpass 1 (lpf0-lpf1)- BP, default = 96 . unsigned , default = 96
15: 8	R/W	0d64	reg_adp_hcti_bst_gain2 : : gain of the bandpass 2 (hdn-lpf0)- HP, default = 64 . unsigned , default = 64
7: 0	R/W	0d16	reg_adp_hcti_bst_gain3 : : gain of the unsharp band (yuvin-hdn) - US, default = 16 . unsigned , default = 16

Amlogic Proprietary and Confidential
Copyright © Amlogic. All rights reserved.

Table 10-2057 SRSHARP1_HCTI_BST_CORE 0x5230

Bit(s)	R/W	Default	Description
31:24	R/W	0d0	reg_adp_hcti_bst_core0 : : core of the bandpass 0 (lpf1-lpf2)- LBP, default = 0 . unsigned , default = 0
23:16	R/W	0d0	reg_adp_hcti_bst_core1 : : core of the bandpass 1 (lpf0-lpf1)- BP, default = 0 . unsigned , default = 0
15: 8	R/W	0d0	reg_adp_hcti_bst_core2 : : core of the bandpass 2 (hdn-lpf0)- HP, default = 0 . unsigned , default = 0
7: 0	R/W	0d0	reg_adp_hcti_bst_core3 : : core of the unsharp band (yuvin-hdn) - US, default = 0 . unsigned , default = 0

Table 10-2058 SRSHARP1_HCTI_CON_2_GAIN_0 0x5231

Bit(s)	R/W	Default	Description
31:29	R/W	0d2	reg_adp_hcti_con_mode : : con mode 0:[0, 0,-1, 1, 0, 0, 0]+[0, 0, 0, 1,-1, 0, 0], 1: [0, 0,-1, 0, 1, 0, 0], 2: [0,-1, 0, 0, 0, 1, 0], 3:[-1, 0, 0, 0, 0, 0, 1], 4: .... default = 2. unsigned , default = 2
28:26	R/W	0d3	reg_adp_hcti_dx_mode : : dx mode 0: [-1 1 0]; 1~7: [-1 (2x+1)"0" 1], default = 3 . unsigned , default = 3
25:24	R/W	0d1	reg_adp_hcti_con_lpf : : lpf mode of the con: 0: [1 2 1]/4; 1:[1 2 2 2 1]/8, default = 1 . unsigned , default = 1
23:16	R/W	0d25	reg_adp_hcti_con_2_gain0 : , default = 25 . unsigned , default = 25
15: 8	R/W	0d60	reg_adp_hcti_con_2_gain1 : , default = 60 . unsigned , default = 60
7: 0	R/W	0d0	reg_adp_hcti_con_2_gain2 : 0;, default = 0 . unsigned , default = 0

Table 10-2059 SRSHARP1_HCTI_CON_2_GAIN_1 0x5232

Bit(s)	R/W	Default	Description
31:24	R/W	0d96	reg_adp_hcti_con_2_gain3 : 96;, default = 96 . unsigned , default = 96
23:16	R/W	0d5	reg_adp_hcti_con_2_gain4 : 5;, default = 5 . unsigned , default = 5
15: 8	R/W	0d80	reg_adp_hcti_con_2_gain5 : 80;, default = 80 . unsigned , default = 80
7: 0	R/W	0d20	reg_adp_hcti_con_2_gain6 : 20;, default = 20 . unsigned , default = 20

Table 10-2060 SRSHARP1_HCTI_OS_MARGIN 0x5233

Bit(s)	R/W	Default	Description
7: 0	R/W	0d0	reg_adp_hcti_os_margin : : margin for hcti overshoot, default = 0 . unsigned , default = 0

Amlogic Proprietary and Confidential
Copyright © Amlogic. All rights reserved.

Table 10-2061 SRSHARP1_HLTI_FLT_CLP_DC 0x5234

Bit(s)	R/W	Default	Description
28	R/W	0d1	reg_adp_hlti_en : , 0: no cti, 1: new cti, default = 1 . unsigned , default = 1
27:26	R/W	0d2	reg_adp_hlti_vdn_flt : , 0: no lpf; 1:[0,2,4,2,0], 2 : [1 2 2 2 1]/8 3:[1 0 2 0 1]/4, default = 2 . unsigned , default = 2
25:24	R/W	0d2	reg_adp_hlti_hdn_flt : , 0: no lpf; 1:[0, 0, 0, 4, 8, 4, 0, 0, 0], 2:[0, 0, 2, 4, 4, 4, 2, 0, 0], 3: [1, 2, 2, 2, 2, 2, 2, 2, 1], default = 2. unsigned , default = 2
23:22	R/W	0d2	reg_adp_hlti_ddn_flt : , 0: no lpf; 1:[0,2,4,2,0], 2 : [1 2 2 2 1]/8 3:[1 0 2 0 1]/4, default = 2 . unsigned , default = 2
21:20	R/W	0d2	reg_adp_hlti_lpf0_flt : , 0:no filter; 1:sigma=0.75, 2: sigma = 1.0, 3: sigma = 1.5, default = 2 . unsigned , default = 2
19:18	R/W	0d2	reg_adp_hlti_lpf1_flt : , 0:no filter; 1:sigma= 2.0, 2: sigma = 3.0, 3: sigma = 4.0, default = 2 . unsigned , default = 2
17:16	R/W	0d2	reg_adp_hlti_lpf2_flt : , 0:no filter; 1:sigma=5.0, 2: sigma = 9.0, 3: sigma = 13.0, default = 2 . unsigned , default = 2
15:12	R/W	0d2	reg_adp_hlti_hard_clp_win : , window size, 0~8, default = 2 . unsigned , default = 2
11: 8	R/W	0d1	reg_adp_hlti_hard_win_min : , window size, 0~8, default = 1 . unsigned , default = 1
4	R/W	0d0	reg_adp_hlti_clp_mode : , 0: hard clip, 1: adaptive clip, default = 0 . unsigned , default = 0
2: 0	R/W	0d4	reg_adp_hlti_dc_mode : , 0:dn, 1:lpf0, 2:lpf1, 3:lpf2, 4: lpf3: 5: vdn result; 6/7:org, default = 4 . unsigned , default = 4

Table 10-2062 SRSHARP1_HLTI_BST_GAIN 0x5235

Bit(s)	R/W	Default	Description
31:24	R/W	0d40	reg_adp_hlti_bst_gain0 : : gain of the bandpass 0 (lpf1-lpf2)- LBP, default = 40 . unsigned , default = 40
23:16	R/W	0d48	reg_adp_hlti_bst_gain1 : : gain of the bandpass 1 (lpf0-lpf1)- BP, default = 48 . unsigned , default = 48
15: 8	R/W	0d32	reg_adp_hlti_bst_gain2 : : gain of the bandpass 2 (hdn-lpf0)- HP, default = 32 . unsigned , default = 32
7: 0	R/W	0d16	reg_adp_hlti_bst_gain3 : : gain of the unsharp band (yuvin-hdn) - US, default = 16 . unsigned , default = 16

Table 10-2063 SRSHARP1_HLTI_BST_CORE 0x5236

Bit(s)	R/W	Default	Description
31:24	R/W	0d5	reg_adp_hlti_bst_core0 : : core of the bandpass 0 (lpf1-lpf2)- LBP, default = 5 . unsigned , default = 5
23:16	R/W	0d5	reg_adp_hlti_bst_core1 : : core of the bandpass 1 (lpf0-lpf1)- BP, default = 5 . unsigned , default = 5
15: 8	R/W	0d5	reg_adp_hlti_bst_core2 : : core of the bandpass 2 (hdn-lpf0)- HP, default = 5 . unsigned , default = 5
7: 0	R/W	0d3	reg_adp_hlti_bst_core3 : : core of the unsharp band (yuvin-hdn) - US, default = 3 . unsigned , default = 3

Amlogic Proprietary and Confidential
Copyright © Amlogic. All rights reserved.

Table 10-2064 SRSHARP1_HLTI_CON_2_GAIN_0 0x5237

Bit(s)	R/W	Default	Description
31:29	R/W	0d2	reg_adp_hlti_con_mode : : con mode 0:[0, 0,-1, 1, 0, 0, 0]+[0, 0, 0, 1,-1, 0, 0], 1: [0, 0,-1, 0, 1, 0, 0], 2: [0,-1, 0, 0, 0, 1, 0], 3:[-1, 0, 0, 0, 0, 0, 1], 4: ....., default = 2. unsigned , default = 2
28:26	R/W	0d3	reg_adp_hlti_dx_mode : : dx mode 0: [-1 1 0]; 1~7: [-1 (2x+1)"0" 1], default = 3 . unsigned , default = 3
25:24	R/W	0d1	reg_adp_hlti_con_lpf : : lpf mode of the con: 0: [1 2 1]/4; 1:[1 2 2 2 1]/8, default = 1 . unsigned , default = 1
23:16	R/W	0d25	reg_adp_hlti_con_2_gain0 : 25;, default = 25 . unsigned , default = 25
15: 8	R/W	0d60	reg_adp_hlti_con_2_gain1 : 60;, default = 60 . unsigned , default = 60
7: 0	R/W	0d90	reg_adp_hlti_con_2_gain2 : 0;, default = 90 . unsigned , default = 90

Table 10-2065 SRSHARP1_HLTI_CON_2_GAIN_1 0x5238

Bit(s)	R/W	Default	Description
31:24	R/W	0d96	reg_adp_hlti_con_2_gain3 : 96;, default = 96 . unsigned , default = 96
23:16	R/W	0d95	reg_adp_hlti_con_2_gain4 : 5;, default = 95 . unsigned , default = 95
15: 8	R/W	0d80	reg_adp_hlti_con_2_gain5 : 80;, default = 80 . unsigned , default = 80
7: 0	R/W	0d20	reg_adp_hlti_con_2_gain6 : 20;, default = 20 . unsigned , default = 20

Table 10-2066 SRSHARP1_HLTI_OS_MARGIN 0x5239

Bit(s)	R/W	Default	Description
7: 0	R/W	0d0	reg_adp_hlti_os_margin : : margin for hlti overshoot, default = 0 . unsigned , default = 0

Table 10-2067 SRSHARP1_VLTI_FLT_CON_CLP 0x523a

Bit(s)	R/W	Default	Description
14	R/W	0d1	reg_adp_vlti_en : : enable bit of vlti, default = 1 . unsigned , default = 1
13:12	R/W	0d3	reg_adp_vlti_hxn_flt : : 0: no dn; 1: [1 2 1]/4; 2 : [1 2 2 2 1]/8 3:[1 0 2 0 1]/4, default = 3 . unsigned , default = 3
11:10	R/W	0d3	reg_adp_vlti_dxn_flt : : 0: no dn; 1: [1 2 1]/4; 2 : [1 2 2 2 1]/8 3:[1 0 2 0 1]/4, default = 3 . unsigned , default = 3
9: 8	R/W	0d3	reg_adp_vlti_han_flt : : 0: no dn; 1: [1 2 1]/4; 2 : [1 2 2 2 1]/8 3:[1 0 2 0 1]/4, default = 3 . unsigned , default = 3
7: 6	R/W	0d3	reg_adp_vlti_dan_flt : : 0: no dn; 1: [1 2 1]/4; 2 : [1 2 2 2 1]/8 3:[1 0 2 0 1]/4, default = 3 . unsigned , default = 3
5: 4	R/W	0d2	reg_adp_vlti_dx_mode : : 0:[-1 1] 1:[-1 0 -1]; 2/3: [-1 0 0 0 -1], default = 2 . unsigned , default = 2

Amlogic Proprietary and Confidential
Copyright © Amlogic. All rights reserved.

Bit(s)	R/W	Default	Description
2	R/W	0d1	reg_adp_vlti_con_lpf : : lpf mode of the con: 0: [1 2 1]/4; 1:[1 2 2 2 1]/8, default = 1 . unsigned , default = 1
0	R/W	0d1	reg_adp_vlti_hard_clp_win : : window size; 0: 1x3 window; 1: 1x5 window, default = 1 . unsigned , default = 1

Table 10-2068 SRSHARP1_VLTI_BST_GAIN 0x523b

Bit(s)	R/W	Default	Description
23:16	R/W	0d32	reg_adp_vlti_bst_gain0 : : gain to boost filter [-1 2 -1];, default = 32 . unsigned , default = 32
15: 8	R/W	0d32	reg_adp_vlti_bst_gain1 : : gain to boost filter [-1 0 2 0 -1];, default = 32 . unsigned , default = 32
7: 0	R/W	0d32	reg_adp_vlti_bst_gain2 : : gain to boost filter usf, default = 32 . unsigned , default = 32

Table 10-2069 SRSHARP1_VLTI_BST_CORE 0x523c

Bit(s)	R/W	Default	Description
23:16	R/W	0d5	reg_adp_vlti_bst_core0 : : coring to boost filter [-1 2 -1];, default = 5 . unsigned , default = 5
15: 8	R/W	0d5	reg_adp_vlti_bst_core1 : : coring to boost filter [-1 0 2 0 -1];, default = 5 . unsigned , default = 5
7: 0	R/W	0d3	reg_adp_vlti_bst_core2 : : coring to boost filter usf, default = 3 . unsigned , default = 3

Table 10-2070 SRSHARP1_VLTI_CON_2_GAIN_0 0x523d

Bit(s)	R/W	Default	Description
31:24	R/W	0d25	reg_adp_vlti_con_2_gain0 : 25;, default = 25 . unsigned , default = 25
23:16	R/W	0d69	reg_adp_vlti_con_2_gain1 : 60;, default = 69 . unsigned , default = 60
15: 8	R/W	0d90	reg_adp_vlti_con_2_gain2 : 0;, default = 90 . unsigned , default = 90
7: 0	R/W	0d96	reg_adp_vlti_con_2_gain3 : 96;, default = 96 . unsigned , default = 96

Table 10-2071 SRSHARP1_VLTI_CON_2_GAIN_1 0x523e

Bit(s)	R/W	Default	Description
31:24	R/W	0d95	reg_adp_vlti_con_2_gain4 : 5;, default = 95 . unsigned , default = 95
23:16	R/W	0d80	reg_adp_vlti_con_2_gain5 : 80;, default = 80 . unsigned , default = 80
15: 8	R/W	0d20	reg_adp_vlti_con_2_gain6 : 20;, default = 20 . unsigned , default = 20
7: 0	R/W	0d0	reg_adp_vlti_os_margin : : margin for vlti overshoot, default = 0 . unsigned , default = 0

Amlogic Proprietary and Confidential
Copyright © Amlogic. All rights reserved.

Table 10-2072 SRSHARP1_VCTI_FLT_CON_CLP 0x523f

Bit(s)	R/W	Default	Description
14	R/W	0d1	reg_adp_vcti_en : : enable bit of vlti, default = 1 . unsigned , default = 1
13:12	R/W	0d3	reg_adp_vcti_hxn_flt : : 0: no dn; 1: [1 2 1]/4; 2 : [1 2 2 2 1]/8 3:[1 0 2 0 1]/4, default = 3 . unsigned , default = 3
11:10	R/W	0d3	reg_adp_vcti_dxn_flt : : 0: no dn; 1: [1 2 1]/4; 2 : [1 2 2 2 1]/8 3:[1 0 2 0 1]/4, default = 3 . unsigned , default = 3
9: 8	R/W	0d3	reg_adp_vcti_han_flt : : 0: no dn; 1: [1 2 1]/4; 2 : [1 2 2 2 1]/8 3:[1 0 2 0 1]/4, default = 3 . unsigned , default = 3
7: 6	R/W	0d3	reg_adp_vcti_dan_flt : : 0: no dn; 1: [1 2 1]/4; 2 : [1 2 2 2 1]/8 3:[1 0 2 0 1]/4, default = 3 . unsigned , default = 3
5: 4	R/W	0d2	reg_adp_vcti_dx_mode : : 0:[-1 1] 1:[-1 0 -1]; 2/3: [-1 0 0 0 -1], default = 2 . unsigned , default = 2
2	R/W	0d1	reg_adp_vcti_con_lpf : : lpf mode of the con: 0: [1 2 1]/4; 1:[1 2 2 2 1]/8, default = 1 . unsigned , default = 1
0	R/W	0d1	reg_adp_vcti_hard_clp_win : : window size; 0: 1x3 window; 1: 1x5 window, default = 1 . unsigned , default = 1

Table 10-2073 SRSHARP1_VCTI_BST_GAIN 0x5240

Bit(s)	R/W	Default	Description
23:16	R/W	0d0	reg_adp_vcti_bst_gain0 : : gain to boost filter [-1 2 -1];, default = 0 . unsigned , default = 0
15: 8	R/W	0d0	reg_adp_vcti_bst_gain1 : : gain to boost filter [-1 0 2 0 -1];, default = 0 . unsigned , default = 0
7: 0	R/W	0d0	reg_adp_vcti_bst_gain2 : : gain to boost filter usf, default = 0 . unsigned , default = 0

Table 10-2074 SRSHARP1_VCTI_BST_CORE 0x5241

Bit(s)	R/W	Default	Description
23:16	R/W	0d0	reg_adp_vcti_bst_core0 : : coring to boost filter [-1 2 -1];, default = 0 . unsigned , default = 0
15: 8	R/W	0d0	reg_adp_vcti_bst_core1 : : coring to boost filter [-1 0 2 0 -1];, default = 0 . unsigned , default = 0
7: 0	R/W	0d0	reg_adp_vcti_bst_core2 : : coring to boost filter usf, default = 0 . unsigned , default = 0

Table 10-2075 SRSHARP1_VCTI_CON_2_GAIN_0 0x5242

Bit(s)	R/W	Default	Description
31:24	R/W	0d25	reg_adp_vcti_con_2_gain0 : 25;, default = 25 . unsigned , default = 25
23:16	R/W	0d60	reg_adp_vcti_con_2_gain1 : 60;, default = 60 . unsigned , default = 60
15: 8	R/W	0d90	reg_adp_vcti_con_2_gain2 : 0;, default = 90 . unsigned , default = 90
7: 0	R/W	0d96	reg_adp_vcti_con_2_gain3 : 96;, default = 96 . unsigned , default = 96

Amlogic Proprietary and Confidential
Copyright © Amlogic. All rights reserved.

Table 10-2076 SRSHARP1_VCTI_CON_2_GAIN_1 0x5243

Bit(s)	R/W	Default	Description
31:24	R/W	0d95	reg_adp_vcti_con_2_gain4 : 5;, default = 95 . unsigned , default = 95
23:16	R/W	0d80	reg_adp_vcti_con_2_gain5 : 80;, default = 80 . unsigned , default = 80
15: 8	R/W	0d20	reg_adp_vcti_con_2_gain6 : 20;, default = 20 . unsigned , default = 20
7: 0	R/W	0d0	reg_adp_vcti_os_margin : : margin for vcti overshoot, default = 0 . unsigned , default = 0

Table 10-2077 SRSHARP1_SHARP_3DLIMIT 0x5244

Bit(s)	R/W	Default	Description
28:16	R/W	0d0	reg_3d_mid_width : ,width of left part of 3d input, dft = half size of input width default = 0 . unsigned , default = 960
12: 0	R/W	0d0	reg_3d_mid_height : ,height of left part of 3d input, dft = half size of input height default = 0 . unsigned , default = 540

Table 10-2078 SRSHARP1_DNLP_EN 0x5245

Bit(s)	R/W	Default	Description
15□8	R/W	0d0	reg_dnlp_hblank: . unsigned , default = 8
0	R/W	0d1	reg_dnlp_en : . unsigned , default = 1

Table 10-2079 SRSHARP1_DEMO_CRTL 0x5256

Bit(s)	R/W	Default	Description
18:17	R/W	0d2	demo_disp_position : . unsigned , default = 2
16	R/W	0d0	demo_hsvsharp_enable : . unsigned , default = 0
12: 0	R/W	0d360	demo_left_top_screen_width : : . unsigned , default = 360

Table 10-2080 SRSHARP1_SHARP_SR2_CTRL 0x5257

Bit(s)	R/W	Default	Description
24	R/W	0	reg_sr2_bic_pknr_bypass : bypass peaking/TI/Cubic
23:22	R/W		reserved
21:16	R/W	24	sr2_pk_la_err_dis_rate, low angle and high angle error should not be no less than nearby_error* rate/64
15: 8	R/W	16	sr2_pk_sad_diag_gain, gain to sad[2] and sad[6], 16 normalized to 1
7	R/W	0	sr2_vert_outphs, vertical output pixel phase, 0: 0 phase; 1: 1/2 phase
6	R/W	0	sr2_horz_outphs, horizontal output pixel phase, 0: 0 phase; 1: 1/2 phase
5	R/W	0	sr2_vert_ratio , vertical scale ratio, 0-> 1:1; 1-> 1:2
4	R/W	0	sr2_horz_ratio , horizontal scale ratio, 0-> 1:1; 1-> 1:2
3	R/W	1	sr2_ bic_norm , normalization of bicubical: 0: 128; 1: 64

Amlogic Proprietary and Confidential
Copyright © Amlogic. All rights reserved.

Bit(s)	R/W	Default	Description
2	R/W	0	sr2_ enable , 1 to enable super scaler
1	R/W	0	sr2_ sharp_prc_lr_hbic,
0	R/W	0	sr2_ sharp_prc_lr, 1: LTI/CTI/NR/Peaking processing using LR grid. 0: on HR grid; 1:on LR grid, horizontally no upscale, but using simple bic.

Table 10-2081 SRSHARP1_SHARP_SR2_YBIC_HCOEF0 0x5258

Bit(s)	R/W	Default	Description
31:24	R/W	0	sr2_y_bic_hcoeff03, signed
23:16	R/W	0	sr2_y_bic_hcoeff02, signed
15: 8	R/W	64	sr2_y_bic_hcoeff01, signed
7: 0	R/W	0	sr2_y_bic_hcoeff00, signed

Table 10-2082 SRSHARP1_SHARP_SR2_YBIC_HCOEF1 0x5259

Bit(s)	R/W	Default	Description
31:24	R/W	-4	sr2_y_bic_hcoeff13 , signed
23:16	R/W	36	sr2_y_bic_hcoeff12 , signed
15: 8	R/W	36	sr2_y_bic_hcoeff11 , signed
7: 0	R/W	-4	sr2_y_bic_hcoeff10 , signed

Table 10-2083 SRSHARP1_SHARP_SR2_CBIC_HCOEF0 0x525a

Bit(s)	R/W	Default	Description
31:24	R/W	0	sr2_c_bic_hcoeff03 , signed
23:16	R/W	21	sr2_c_bic_hcoeff02 , signed
15: 8	R/W	22	sr2_c_bic_hcoeff01 , signed
7: 0	R/W	21	sr2_c_bic_hcoeff00 , signed

Table 10-2084 SRSHARP1_SHARP_SR2_CBIC_HCOEF1 0x525b

Bit(s)	R/W	Default	Description
31:24	R/W	-4	sr2_c_bic_hcoeff13 , signed
23:16	R/W	36	sr2_c_bic_hcoeff12 , signed
15: 8	R/W	36	sr2_c_bic_hcoeff11 , signed
7: 0	R/W	-4	sr2_c_bic_hcoeff10 , signed

Amlogic Proprietary and Confidential
Copyright © Amlogic. All rights reserved.

Table 10-2085 SRSHARP1_SHARP_SR2_YBIC_VCOEF0 0x525c

Bit(s)	R/W	Default	Description
31:24	R/W	0	sr2_y_bic_vcoeff03 , signed
23:16	R/W	0	sr2_y_bic_vcoeff02 , signed
15: 8	R/W	64	sr2_y_bic_vcoeff01 , signed
7: 0	R/W	0	sr2_y_bic_vcoeff00 , signed

Table 10-2086 SRSHARP1_SHARP_SR2_YBIC_VCOEF1 0x525d

Bit(s)	R/W	Default	Description
31:24	R/W	-4	sr2_y_bic_vcoeff13 , signed
23:16	R/W	36	sr2_y_bic_vcoeff12 , signed
15: 8	R/W	36	sr2_y_bic_vcoeff11 , signed
7: 0	R/W	-4	sr2_y_bic_vcoeff10 , signed

Table 10-2087 SRSHARP1_SHARP_SR2_CBIC_VCOEF0 0x525e

Bit(s)	R/W	Default	Description
31:24	R/W	0	sr2_c_bic_vcoeff03 , signed
23:16	R/W	21	sr2_c_bic_vcoeff02 , signed
15: 8	R/W	22	sr2_c_bic_vcoeff01 , signed
7: 0	R/W	21	sr2_c_bic_vcoeff00 , signed

Table 10-2088 SRSHARP1_SHARP_SR2_CBIC_VCOEF1 0x525f

Bit(s)	R/W	Default	Description
31:24	R/W	-4	sr2_c_bic_vcoeff13 , signed
23:16	R/W	36	sr2_c_bic_vcoeff12 , signed
15: 8	R/W	36	sr2_c_bic_vcoeff11 , signed
7: 0	R/W	-4	sr2_c_bic_vcoeff10 , signed

Table 10-2089 SRSHARP1_SHARP_SR2_MISC 0x5260

Bit(s)	R/W	Default	Description
31:2	R/W		reserved
1	R/W	0	sr2_cmpmux_bef , 0 : no swap for YUV/RGB; 1: swap for YUV/RGB, YUV/RGB->UVY/GBR
0	R/W	0	sr2_cmpmux_aft , 0 : no swap for YUV/RGB; 1: swap for YUV/RGB, UVY/GBR->YUV/RGB

Amlogic Proprietary and Confidential
Copyright © Amlogic. All rights reserved.

Table 10-2090 SRSHARP1_SR3_SAD_CTRL 0x5261

Bit(s)	R/W	Default	Description
31:30	R/W		reserved
29:24	R/W	0d6	reg_sr3_pk_sad_core_rate : rate of coring.
23:22	R/W		reserved
21:16	R/W	0d6	reg_sr3_lti_sad_core_rate : rate of coring.
15:14	R/W		reserved
13:8	R/W	0d6	reg_sr3_cti_sad_core_rate : rate of coring.
7	R/W	0d1	reg_sr3_lti_hsad_mode: mode for hsad of lti calculation, 0:block based; 1: other sharp
6	R/W	0d1	reg_sr3_cti_hsad_mode: mode for hsad of cti calculation, 0:block based; 1: other sharp
5	R/W	0d1	reg_sr3_lti_dsad_mode: mode for dsad of lti calculation, 0:block based; 1: other sharp
4	R/W	0d1	reg_sr3_cti_dsad_mode: mode for dsad of cti calculation, 0:block based; 1: other sharp
3	R/W	0d1	reg_sr3_lti_vsad_mode: mode for vsad of lti calculation, 0:block based; 1: other sharp
2	R/W	0d1	reg_sr3_cti_vsad_mode: mode for vsad of cti calculation, 0:block based; 1: other sharp
1	R/W	0d1	reg_sr3_lti_hsad_hlpf: hlpf for hsad of lti calculation, 0:no hlpf; 1: with [1 2 1] hlpf.
0	R/W	0d1	reg_sr3_cti_hsad_hlpf: hlpf for hsad of cti calculation, 0:no hlpf; 1: with [1 2 1] hlpf.

Table 10-2091 SRSHARP1_SR3_PK_CTRL0 0x5262

Bit(s)	R/W	Default	Description
31:12	R/W		reserved
11	R/W	0d1	reg_sr3_pk_sad_mode: mode for sad of peaking calculation, 0: block based; 1: other sharp.
10	R/W	0d1	reg_sr3_pk_hsad_hlpf: hlpf for hsad for peaking calculation,0:no hlpf; 1: with [1 2 2 2 1] hlpf.
9	R/W	0d1	reg_sr3_pk_vsad_hlpf: hlpf for vsad for peaking calculation,0:no hlpf; 1: with [1 2 2 2 1] hlpf.
8	R/W	0d1	reg_sr3_pk_dsad_hlpf: hlpf for dsad for peaking calculation,0:no hlpf; 1: with [1 2 2 2 1] hlpf.
7:6	R/W	0d3	reg_sr3_pk_hpdrt_mode: mode for HPdrt filter
5:4	R/W	0d3	reg_sr3_pk_bpdrt_mode: mode for BPdrt filter
3:2	R/W	0d3	reg_pk_drtbld_range: range of the min2 and min direction distance
1	R/W		reserved
0	R/W	0d0	reg_sr3_pk_ti_blend_mode: blend mode of the TI and PK result

Amlogic Proprietary and Confidential
Copyright © Amlogic. All rights reserved.

Table 10-2092 SRSHARP1_SR3_PK_CTRL1 0x5263

Bit(s)	R/W	Default	Description
31	R/W		reserved
30:28	R/W	0d1	reg_sr3_pk_Hp_hvcon_replace8_maxsad: replace HP hvcon by maxsad
26:24	R/W	0d1	reg_sr3_pk_bp_hvcon_replace8_maxsad: replace BP hvcon by maxsad
23:16	R/W	0d32	reg_sr3_pk_hp_hvcon_replace8lv_gain: gain to local variant before calculating the hv gain for peaking.
15:8	R/W	0d32	reg_sr3_pk_bp_hvcon_replace8lv_gain: gain to local variant before calculating the hv gain for peaking.
7	R/W	0d1	reg_sr3_sad_intlev_mode: interleave detect xerr mode: 0 max; 1: sum
6	R/W	0d1	reg_sr3_sad_intlev_mode1: mode 1 of using diagonal protection: 1: with diagonal protection
5:0	R/W	0d12	reg_sr3_sad_intlev_gain: interleave detection for sad gain applied, normalized to 8 as 1

Table 10-2093 SRSHARP1_DEJ_CTRL 0x5264

Bit(s)	R/W	Default	Description
15:8	R/W	8	reg_sr3_dejaggy_hblank
7:4	R/W		reserved
3:2	R/W	0d3	reg_sr3_dejaggy_sameside_prtct: enable of sr3 dejaggy same side curve protect from filter, [0] for proc path; [1] for ctrl path.
1	R/W	0d1	reg_sr3_dejaggy_sameside_mode: mode of sameside flag decision
0	R/W	0d1	reg_sr3_dejaggy_enable: enable of sr3 dejaggy

Table 10-2094 SRSHARP1_DEJ_ALPHA 0x5265

Bit(s)	R/W	Default	Description
31:28	R/W	0d0	reg_sr3_dejaggy_ctrlchrm_alpha_1 : alpha for LR video LPF
27:24	R/W	0d15	reg_sr3_dejaggy_ctrlchrm_alpha_0 : alpha for LR video LPF
23:20	R/W	0d0	reg_sr3_dejaggy_ctrlluma_alpha_1 : alpha for LR video LPF
19:16	R/W	0d15	reg_sr3_dejaggy_ctrlluma_alpha_0 : alpha for LR video LPF
15:12	R/W	0d4	reg_sr3_dejaggy_procchrm_alpha_1: alpha for LR video LPF
11:8	R/W	0d6	reg_sr3_dejaggy_procchrm_alpha_0: alpha for LR video LPF
7:4	R/W	0d4	reg_sr3_dejaggy_procluma_alpha_1: alpha for LR video LPF
3:0	R/W	0d6	reg_sr3_dejaggy_procluma_alpha_0: alpha for LR video LPF

Amlogic Proprietary and Confidential
Copyright © Amlogic. All rights reserved.

Table 10-2095 SRSHARP1_SR3_DRTLPF_EN 0x5266

Bit(s)	R/W	Default	Description
31:15	R/W		reserved
14:8	R/W	0d0	reg_pk_debug_edge
6:4	R/W	0d0	reg_sr3_drtlpf_theta_en
2:0	R/W	0d7	reg_sr3_drtlpf_enable: directional lpf on Y/U/V channels

Table 10-2096 SRSHARP1_SR3_DRTLPF_ALPHA_0 0x5267

Bit(s)	R/W	Default	Description
31:28	R/W		reserved
27:24	R/W	0d9	reg_sr3_drtlpf_alpha_3
23:20	R/W		reserved
19:16	R/W	0d10	reg_sr3_drtlpf_alpha_2
15:12	R/W		reserved
11:8	R/W	0d11	reg_sr3_drtlpf_alpha_1
7:4	R/W		reserved
3:0	R/W	0d12	reg_sr3_drtlpf_alpha_0: directional lpf alpha coef for min_sad/max_sad compare

Table 10-2097 SRSHARP1_SR3_DRTLPF_ALPHA_1 0x5268

Bit(s)	R/W	Default	Description
31:28	R/W		reserved
27:24	R/W	0d1	reg_sr3_drtlpf_alpha_7
23:20	R/W		reserved
19:16	R/W	0d4	reg_sr3_drtlpf_alpha_6
15:12	R/W		reserved
11:8	R/W	0d7	reg_sr3_drtlpf_alpha_5
7:4	R/W		reserved
3:0	R/W	0d8	reg_sr3_drtlpf_alpha_4: directional lpf alpha coef for min_sad/max_sad compare

Table 10-2098 SRSHARP1_SR3_DRTLPF_ALPHA_2 0x5269

Bit(s)	R/W	Default	Description
31:28	R/W		reserved
27:24	R/W	0d0	reg_sr3_drtlpf_alpha_11
23:20	R/W		reserved
19:16	R/W	0d0	reg_sr3_drtlpf_alpha_10
15:12	R/W		reserved

Amlogic Proprietary and Confidential
Copyright © Amlogic. All rights reserved.

Bit(s)	R/W	Default	Description
11:8	R/W	0d0	reg_sr3_drtlpf_alpha_9
7:4	R/W		reserved
3:0	R/W	0d0	reg_sr3_drtlpf_alpha_8: directional lpf alpha coef for min_sad/max_sad compare

Table 10-2099 SRSHARP1_SR3_DRTLPF_ALPHA_OFST 0x526a

Bit(s)	R/W	Default	Description
31:28	R/W	0	reg_sr3_drtlpf_alpha_ofst7
27:24	R/W	0	reg_sr3_drtlpf_alpha_ofst6
23:20	R/W	0	reg_sr3_drtlpf_alpha_ofst5
19:16	R/W	-2	reg_sr3_drtlpf_alpha_ofst4
15:12	R/W	0	reg_sr3_drtlpf_alpha_ofst3
11:8	R/W	0	reg_sr3_drtlpf_alpha_ofst2
7:4	R/W	0	reg_sr3_drtlpf_alpha_ofst1
3:0	R/W	-2	reg_sr3_drtlpf_alpha_ofst0: directional lpf alpha coef offset of each direction.

Table 10-2100 SRSHARP1_SR3_DERING_CTRL 0x526b

Bit(s)	R/W	Default	Description
31	R/W		reserved
30:28	R/W	1	reg_sr3_dering_enable: dering enable
27	R/W		reserved
26:24	R/W	3	reg_sr3_dering_varlpf_mode: local variant LPF mode. 0: no filter; 1: errosion 3x3; 2: 3x3 lpf; 3: 3x3 errosion + lpf
23:20	R/W	9	reg_sr3_dering_maxrange: range of dering in LR resolution.
19:18	R/W		reserved
17:16	R/W	2	reg_sr3_dering_lcvar_blend_mode: mode for lcvar calculation. 0:HV blend; 1:di-ag blend; 2:HV blend + V; 3: HV blend+Diag blend
15:8	R/W	40	reg_sr3_dering_lcvar_gain: gain to local variant and normalized to 32 as 1
7:0	R/W	28	reg_sr3_dering_lcvar_nearby_maxsad_th: threshold to use near side maxsad if that side is larger than this threshold, otherwise use the max one.

Table 10-2101 SRSHARP1_SR3_DERING_LUMA2PKGAIN_0TO3 0x526c

Bit(s)	R/W	Default	Description
31:24	R/W	255	reg_sr3_dering_luma2pkgain3: level limit(for th0<bpcon<th1) of curve for dering pkgain base on LPF luma level
23:16	R/W	255	reg_sr3_dering_luma2pkgain2: level limit(for bpcon<th0) of curve for dering pkgain base on LPF luma level

Amlogic Proprietary and Confidential
Copyright © Amlogic. All rights reserved.

Bit(s)	R/W	Default	Description
15:8	R/W	200	reg_sr3_dering_luma2pkgain1: threshold 1 of curve for dering pkgain based on LPF luma level.
7:0	R/W	30	reg_sr3_dering_luma2pkgain0: threshold 0 of curve for dering pkgain based on LPF luma level.

Table 10-2102 SRSHARP1_SR3_DERING_LUMA2PKGAIN_4TO6 0x526d

Bit(s)	R/W	Default	Description
31:24	R/W		reserved
23:16	R/W	24	reg_sr3_dering_luma2pkgain6: rate1 (for bpcon>th1) of curve for dering pkOS based on LPF luma level.
15:8	R/W	50	reg_sr3_dering_luma2pkgain5: rate0 (for bpcon<th0) of curve for dering pkOS based on LPF luma level.
7:0	R/W	255	reg_sr3_dering_luma2pkgain4: level limit(for bpcon>th1) of curve for dering pkgain base on LPF luma level

Table 10-2103 SRSHARP1_SR3_DERING_LUMA2PKOS_0TO3 0x526e

Bit(s)	R/W	Default	Description
31:24	R/W	255	reg_sr3_dering_luma2pkos3: level limit(for th0<bpcon<th1) of curve for dering pkOS base on LPF luma level
23:16	R/W	255	reg_sr3_dering_luma2pkos2: level limit(for bpcon<th0) of curve for dering pkOS base on LPF luma level
15:8	R/W	200	reg_sr3_dering_luma2pkos1: threshold 1 of curve for dering pkOS based on LPF luma level.
7:0	R/W	30	reg_sr3_dering_luma2pkos0: threshold 0 of curve for dering pkOS based on LPF luma level.

Table 10-2104 SRSHARP1_SR3_DERING_LUMA2PKOS_4TO6 0x526f

Bit(s)	R/W	Default	Description
31:24	R/W		reserved
23:16	R/W	24	reg_sr3_dering_luma2pkos6: rate1 (for bpcon>th1) of curve for dering pkOS based on LPF luma level.
15:8	R/W	50	reg_sr3_dering_luma2pkos5: rate0 (for bpcon<th0) of curve for dering pkOS based on LPF luma level.
7:0	R/W	255	reg_sr3_dering_luma2pkos4: level limit(for bpcon>th1) of curve for dering pkOS base on LPF luma level

Table 10-2105 SRSHARP1_SR3_DERING_GAINVS_MADSAD 0x5270

Bit(s)	R/W	Default	Description
31:28	R/W	0	reg_sr3_dering_gainvs_maxsad7
27:24	R/W	0	reg_sr3_dering_gainvs_maxsad6
23:20	R/W	0	reg_sr3_dering_gainvs_maxsad5

Amlogic Proprietary and Confidential
Copyright © Amlogic. All rights reserved.

Bit(s)	R/W	Default	Description
19:16	R/W	0	reg_sr3_dering_gainvs_maxsad4
15:12	R/W	0	reg_sr3_dering_gainvs_maxsad3
11:8	R/W	0	reg_sr3_dering_gainvs_maxsad2
7:4	R/W	4	reg_sr3_dering_gainvs_maxsad1
3:0	R/W	8	reg_sr3_dering_gainvs_maxsad0: pkgain vs maxsad value, 8 node interpolations.

Table 10-2106 SRSHARP1_SR3_DERING_GAINVS_VR2MAX 0x5271

Bit(s)	R/W	Default	Description
31:28	R/W	15	reg_sr3_dering_gainvs_vr2max7
27:24	R/W	15	reg_sr3_dering_gainvs_vr2max6
23:20	R/W	15	reg_sr3_dering_gainvs_vr2max5
19:16	R/W	15	reg_sr3_dering_gainvs_vr2max4
15:12	R/W	14	reg_sr3_dering_gainvs_vr2max3
11:8	R/W	12	reg_sr3_dering_gainvs_vr2max2
7:4	R/W	2	reg_sr3_dering_gainvs_vr2max1
3:0	R/W	0	reg_sr3_dering_gainvs_vr2max0: pkgain vs ratio

Table 10-2107 SRSHARP1_SR3_DERING_PARAM0 0x5272

Bit(s)	R/W	Default	Description
31:24	R/W		reserved
23:16	R/W	10	reg_sr3_dering_lcvar_floor
15:8	R/W	32	reg_sr3_dering_vr2max_gain: gain to max before feeding to LUT
7:6	R/W		reserved
5:0	R/W	16	reg_sr3_dering_vr2max_limt: limit of maxsad

Table 10-2108 SRSHARP1_SR3_DRTLPF_THETA 0x5273

Bit(s)	R/W	Default	Description
31:0	R/W	0xfe-c96420	reg_sr3_drtlpf_theta: u4x8 directional lpf beta coef for min_sad/min2_sad compared to x=0:7 correspond to [1:8]/16; 0 means no drtLPF, 15: 100% alpha dependant drtLPF.

Amlogic Proprietary and Confidential
Copyright © Amlogic. All rights reserved.

Table 10-2109 SRSHARP1_SATPRT_CTRL 0x5274

Bit(s)	R/W	Default	Description
31:28	R/W		reserved
27:16	R/W	5	reg_satprt_sat_core: 4x will be coring to cor(irgb_max-irgb_min) to calculate the oy_delt, the smaller the more protection to color, the larger only the rich color will be protected.
15:8	R/W	64	reg_satprt_sat_rate: rate to cor(irgb_max-irgb_min) to calculate the oy_delt,the larger the more protection to color; norm 16 as 1
7:4	R/W		reserved
3:2	R/W	1	reg_satprt_csc_mode: CSC mode of current yuv input: 0:601; 1:709; 2:BT2020 NCL; 3 reserved
1	R/W	1	reg_satprt_is_lmt: flag telling the YUV is limited range data or full rang data; 1 is limited data
0	R/W	0	reg_satprt_enable: 1 to enable of saturation protection for dnlp adjustments

Table 10-2110 SRSHARP1_SATPRT_DIVM 0x5275

Bit(s)	R/W	Default	Description
31:24	R/W		reserved
23:0	R/W	{128,12-8,128}	reg_satprt_div_m: u8x3, 1/m, normalized to 128 as 1.

Table 10-2111 SRSHARP1_DB_FLT_CTRL 0x5277

Bit(s)	R/W	Default	Description
26	R/W	0	reg_nrdeband_reset1 : // unsigned , default = 0 0 : no reset seed 1: reload chroma seed
25	R/W	0	reg_nrdeband_reset0 : // unsigned , default = 0 0 : no reset seed 1: reload luma seed
24	R/W	0	reg_nrdeband_rgb : // unsigned , default = 0 0 : yuv 1: RGB
23	R/W	1	reg_nrdeband_en11 : // unsigned , default = 1 debanding registers of side lines, [0] for luma, same for below
22	R/W	1	reg_nrdeband_en10 : // unsigned , default = 1 debanding registers of side lines, [1] for chroma, same for below
21	R/W	1	reg_nrdeband_siderand : // unsigned , default = 1 options to use side two lines use the rand, instead of use for the YUV three component of middle line, 0: seed [3]/bandrand[3] for middle line yuv; 1: seed[3]/bandrand[3] for nearby three lines Y;
20	R/W	0	reg_nrdeband_randmode : // unsigned , default = 0 mode of rand noise adding, 0: same noise strength for all difs; else: strenght of noise will not exceed the difs, MIN((pPKReg->reg_nrdeband_bandrand[m]), noise[m])
19:17	R/W	6	reg_nrdeband_bandrand2 : // unsigned , default = 6
15:13	R/W	6	reg_nrdeband_bandrand1 : // unsigned , default = 6
11: 9	R/W	6	reg_nrdeband_bandrand0 : // unsigned , default = 6
7	R/W	1	reg_nrdeband_hpxor1 : // unsigned , default = 1 debanding random hp portion xor, [0] for luma

Amlogic Proprietary and Confidential
Copyright © Amlogic. All rights reserved.

Bit(s)	R/W	Default	Description
6	R/W	1	reg_nrdeband_hpxor0 : // unsigned , default = 1 debanding random hp portion xor, [1] for chroma
5	R/W	1	reg_nrdeband_en1 : // unsigned , default = 1 debanding registers, for luma
4	R/W	1	reg_nrdeband_en0 : // unsigned , default = 1 debanding registers, for chroma
3: 2	R/W	2	reg_nrdeband_lpf_mode1 : // unsigned , default = 2 lpf mode, 0: 3x3, 1:3x5; 2: 5x5; 3:5x7
1: 0	R/W	2	reg_nrdeband_lpf_mode0 : // unsigned , default = 2 lpf mode, 0: 3x3, 1:3x5; 2: 5x5; 3:5x7

Table 10-2112 SRSHARP1_DB_FLT_RANDLUT 0x5279

Bit(s)	R/W	Default	Description
23:21	R/W	1	reg_nrdeband_randslut7 : // unsigned , default = 1 lut0
20:18	R/W	1	reg_nrdeband_randslut6 : // unsigned , default = 1 lut0
17:15	R/W	1	reg_nrdeband_randslut5 : // unsigned , default = 1 lut0
14:12	R/W	1	reg_nrdeband_randslut4 : // unsigned , default = 1 lut0
11: 9	R/W	1	reg_nrdeband_randslut3 : // unsigned , default = 1 lut0
8: 6	R/W	1	reg_nrdeband_randslut2 : // unsigned , default = 1 lut0
5: 3	R/W	1	reg_nrdeband_randslut1 : // unsigned , default = 1 lut0
2: 0	R/W	1	reg_nrdeband_randslut0 : // unsigned , default = 1 lut0

Table 10-2113 SRSHARP1_DB_FLT_PXI_THRD 0x527a

Bit(s)	R/W	Default	Description
25:16	R/W	0	reg_nrdeband_yc_th1 : // unsigned , default = 0 to luma/|u/v| for using the denoise
9: 0	R/W	0	reg_nrdeband_yc_th0 : // unsigned , default = 0 to luma/|u/v| for using the denoise

Table 10-2114 SRSHARP1_DB_FLT_SEED_Y 0x527b

Bit(s)	R/W	Default	Description
31: 0	R/W	162143-8240	reg_nrdeband_seed0 : // unsigned , default = 1621438240 noise adding seed for Y. seed[0]= 0x60a52f20; as default

Table 10-2115 SRSHARP1_DB_FLT_SEED_U 0x527c

Bit(s)	R/W	Default	Description
31: 0	R/W	162143-8247	reg_nrdeband_seed1 : // unsigned , default = 1621438247 noise adding seed for U. seed[0]= 0x60a52f27; as default

Amlogic Proprietary and Confidential
Copyright © Amlogic. All rights reserved.

Table 10-2116 SRSHARP1_DB_FLT_SEED_V 0x527d

Bit(s)	R/W	Default	Description
31: 0	R/W	162143-8242	reg_nrdeband_seed2 : // unsigned , default = 1621438242 noise adding seed for V. seed[0]= 0x60a52f22; as default

Table 10-2117 SRSHARP1_PKGAIN_VSLUMA_LUT_L 0x527e

Bit(s)	R/W	Default	Description
31:28	R/W	5	reg_pkgain_vsluma_lut7
27:24	R/W	6	reg_pkgain_vsluma_lut6
23:20	R/W	6	reg_pkgain_vsluma_lut5
19:16	R/W	6	reg_pkgain_vsluma_lut4
15:12	R/W	7	reg_pkgain_vsluma_lut3
11:8	R/W	10	reg_pkgain_vsluma_lut2
7:4	R/W	12	reg_pkgain_vsluma_lut1
3:0	R/W	8	reg_pkgain_vsluma_lut0

Table 10-2118 SRSHARP1_PKGAIN_VSLUMA_LUT_H 0x527f

Bit(s)	R/W	Default	Description
31:4	R/W		reserved
3:0	R/W	4	reg_pkgain_vsluma_lut8

Table 10-2119 SRSHARP1_PKOSHT_VSLUMA_LUT_L 0x5280

Bit(s)	R/W	Default	Description
31:28	R/W	5	reg_pkosht_vsluma_lut7
27:24	R/W	6	reg_pkosht_vsluma_lut6
23:20	R/W	6	reg_pkosht_vsluma_lut5
19:16	R/W	6	reg_pkosht_vsluma_lut4
15:12	R/W	7	reg_pkosht_vsluma_lut3
11:8	R/W	10	reg_pkosht_vsluma_lut2
7:4	R/W	12	reg_pkosht_vsluma_lut1
3:0	R/W	8	reg_pkosht_vsluma_lut0

Table 10-2120 SRSHARP1_PKOSHT_VSLUMA_LUT_H 0x5281

Bit(s)	R/W	Default	Description
31:4	R/W		reserved
3:0	R/W	4	reg_pkosht_vsluma_lut8

Amlogic Proprietary and Confidential
Copyright © Amlogic. All rights reserved.

Table 10-2121 SRSHARP1_SATPRT_LMT_RGB1 0x5282

Bit(s)	R/W	Default	Description
27:16	R/W	0d0	reg_satprt_lmt_g:
11: 0	R/W	0d0	reg_satprt_lmt_r: limit of RGB channel, for limited range RGB, 12bits

Table 10-2122 SRSHARP1_SATPRT_LMT_RGB2 0x5283

Bit(s)	R/W	Default	Description
31:16	R/W	0d0	reserved
11: 0	R/W	0d0	reg_satprt_lmt_b: limit of RGB channel, for limited range RGB

Table 10-2123 SRSHARP1_SHARP_GATE_CLK_CTRL_0 0x5284

Bit(s)	R/W	Default	Description
31:0	R/W	0d0	Gate clock control [01:00]: sharp input control unit [03:02]: deband unit [05:04]: dejaggy unit [07:06]: dnlp unit [09:08]: demo control unit [11:10]: horiz interp unit

Table 10-2124 SRSHARP1_SHARP_GATE_CLK_CTRL_1 0x5285

Bit(s)	R/W	Default	Description
31:0	R/W	0d0	Gate clock control [01:00]: sr_top “pipe_ctrl” [03:02]: drt [05:04]: ssd [07:06]: cubic [09:08]: edi [11:10]: pkgainsad [13:12]: bicomux [15:14]: bicin_fifo [17:16]: lpf4pkgain_fifo [19:18]: min2hvgain_fifo [21:20]: sad4pkgain_fifo [23:22]: dirminmax4xtl_fifo [25:24]: drtsad8_fifo [27:26]: ssdmax_fifo [29:28]: pkminmax_fifo [31:30]: cirdrtgain_fifo

Amlogic Proprietary and Confidential
Copyright © Amlogic. All rights reserved.

Table 10-2125 SRSHARP1_SHARP_GATE_CLK_CTRL_2 0x5286

Bit(s)	R/W	Default	Description
31:0	R/W	0d0	Gate clock control [01:00]: bufdiff_fifo [03:02]: osvar_fifo [05:04]: pkhvgain unit [07:06]: pkgain unit [09:08]: TI unit [11:10]: pk unit [13:12]: locvar unit [15:14]: hvconc unit

Table 10-2126 SRSHARP1_SHARP_GATE_CLK_CTRL_3 0x5287

Bit(s)	R/W	Default	Description
31:0	R/W	0d0	Gate clock control [01:00]: TI, htl Y [03:02]: TI, vti Y [05:04]: TI, htl U [07:06]: TI, vtl U [09:08]: TI, htl V [11:10]: TI, vtl V [13:12]: TI, lumaminmax_fifo [15:14]: TI, chrmminmax fifo

Table 10-2127 SRSHARP1_SHARP_DPS_CTRL 0x5288

Bit(s)	R/W	Default	Description
31:0	R/W	0d0	Power saving control : hvcon : nrssd : os filter : cubic 5 lines to 9 lines : dering : locvar : drtlpf : hlti : hcti : vlti : vcti : lti blend : cti blend : htishort (no used) : nr Y filter : nr C filter : nr belnd : pkti blend : os ctrl : pk HP : pk BP [26:24] dejaggy power saving control [30:28] reserved

Table 10-2128 SRSHARP1_DNLP_00 0x5290

Bit(s)	R/W	Default	Description
31: 0	R/W	0x0010-0008	reg_dnlp_ygrid0 : : dnlp00 . unsigned , default = 32'h00100008

Amlogic Proprietary and Confidential
Copyright © Amlogic. All rights reserved.

Table 10-2129 SRSHARP1_DNLP_01 0x5291

Bit(s)	R/W	Default	Description
31: 0	R/W	0x0020-0018	reg_dnlp_ygrid1 : : dnlp01 . unsigned , default = 32'h00200018

Table 10-2130 SRSHARP1_DNLP_02 0x5292

Bit(s)	R/W	Default	Description
31: 0	R/W	0x0030-0028	reg_dnlp_ygrid2 : : dnlp02 . unsigned , default = 32'h00300028

Table 10-2131 SRSHARP1_DNLP_03 0x5293

Bit(s)	R/W	Default	Description
31: 0	R/W	0x0040-0038	reg_dnlp_ygrid3 : : dnlp03 . unsigned , default = 32'h00400038

Table 10-2132 SRSHARP1_DNLP_04 0x5294

Bit(s)	R/W	Default	Description
31: 0	R/W	0x0050-0048	reg_dnlp_ygrid4 : : dnlp04 . unsigned , default = 32'h00500048

Table 10-2133 SRSHARP1_DNLP_05 0x5295

Bit(s)	R/W	Default	Description
31: 0	R/W	0x0068-005c	reg_dnlp_ygrid5 : : dnlp05 . unsigned , default = 32'h0068005c

Table 10-2134 SRSHARP1_DNLP_06 0x5296

Bit(s)	R/W	Default	Description
31: 0	R/W	0x0080-0074	reg_dnlp_ygrid6 : : dnlp06 . unsigned , default = 32'h00800074

Table 10-2135 SRSHARP1_DNLP_07 0x5297

Bit(s)	R/W	Default	Description
31: 0	R/W	0x00-a00090	reg_dnlp_ygrid7 : : dnlp07 . unsigned , default = 32'h00a00090

Table 10-2136 SRSHARP1_DNLP_08 0x5298

Bit(s)	R/W	Default	Description
31: 0	R/W	0x00-c000b0	reg_dnlp_ygrid8 : : dnlp08 . unsigned , default = 32'h00c000b0

Amlogic Proprietary and Confidential
Copyright © Amlogic. All rights reserved.

Table 10-2137 SRSHARP1_DNLP_09 0x5299

Bit(s)	R/W	Default	Description
31: 0	R/W	0x00-e000d0	reg_dnlp_ygrid9 : : dnlp09 . unsigned , default = 32'h00e000d0

Table 10-2138 SRSHARP1_DNLP_10 0x529a

Bit(s)	R/W	Default	Description
31: 0	R/W	0x0100-00f0	reg_dnlp_ygrid10 : : dnlp10 . unsigned , default = 32'h010000f0

Table 10-2139 SRSHARP1_DNLP_11 0x529b

Bit(s)	R/W	Default	Description
31: 0	R/W	0x012-c0114	reg_dnlp_ygrid11 : : dnlp11 . unsigned , default = 32'h012c0114

Table 10-2140 SRSHARP1_DNLP_12 0x529c

Bit(s)	R/W	Default	Description
31: 0	R/W	0x0154-0140	reg_dnlp_ygrid12 : : dnlp12 . unsigned , default = 32'h01540140

Table 10-2141 SRSHARP1_DNLP_13 0x529d

Bit(s)	R/W	Default	Description
31: 0	R/W	0x0180-016c	reg_dnlp_ygrid13 : : dnlp13 . unsigned , default = 32'h0180016c

Table 10-2142 SRSHARP1_DNLP_14 0x529e

Bit(s)	R/W	Default	Description
31: 0	R/W	0x01-c001a0	reg_dnlp_ygrid14 : : dnlp14 . unsigned , default = 32'h01c001a0

Table 10-2143 SRSHARP1_DNLP_15 0x529f

Bit(s)	R/W	Default	Description
31: 0	R/W	0x0200-01e0	reg_dnlp_ygrid15 : : dnlp15 . unsigned , default = 32'h020001e0

Table 10-2144 SRSHARP1_DNLP_16 0x52a0

Bit(s)	R/W	Default	Description
31: 0	R/W	0x0240-0220	reg_dnlp_ygrid16 : : dnlp16 . unsigned , default = 32'h02400220

Amlogic Proprietary and Confidential
Copyright © Amlogic. All rights reserved.

Table 10-2145 SRSHARP1_DNLP_17 0x52a1

Bit(s)	R/W	Default	Description
31: 0	R/W	0x0280-0260	reg_dnlp_ygrid17 : : dnlp17 . unsigned , default = 32'h02800260

Table 10-2146 SRSHARP1_DNLP_18 0x52a2

Bit(s)	R/W	Default	Description
31: 0	R/W	0x02-b00298	reg_dnlp_ygrid18 : : dnlp18 . unsigned , default = 32'h02b00298

Table 10-2147 SRSHARP1_DNLP_19 0x52a3

Bit(s)	R/W	Default	Description
31: 0	R/W	0x02-e002c8	reg_dnlp_ygrid19 : : dnlp19 . unsigned , default = 32'h02e002c8

Table 10-2148 SRSHARP1_DNLP_20 0x52a4

Bit(s)	R/W	Default	Description
31: 0	R/W	0x0300-02f0	reg_dnlp_ygrid20 : : dnlp20 . unsigned , default = 32'h030002f0

Table 10-2149 SRSHARP1_DNLP_21 0x52a5

Bit(s)	R/W	Default	Description
31: 0	R/W	0x0320-0310	reg_dnlp_ygrid21 : : dnlp21 . unsigned , default = 32'h03200310

Table 10-2150 SRSHARP1_DNLP_22 0x52a6

Bit(s)	R/W	Default	Description
31: 0	R/W	0x0338-032c	reg_dnlp_ygrid22 : : dnlp22 . unsigned , default = 32'h0338032c

Table 10-2151 SRSHARP1_DNLP_23 0x52a7

Bit(s)	R/W	Default	Description
31: 0	R/W	0x0350-0348	reg_dnlp_ygrid23 : : dnlp23 . unsigned , default = 32'h03500348

Table 10-2152 SRSHARP1_DNLP_24 0x52a8

Bit(s)	R/W	Default	Description
31: 0	R/W	0x035-c0358	reg_dnlp_ygrid24 : : dnlp24 . unsigned , default = 32'h035c0358

Amlogic Proprietary and Confidential
Copyright © Amlogic. All rights reserved.

Table 10-2153 SRSHARP1_DNLP_25 0x52a9

Bit(s)	R/W	Default	Description
31: 0	R/W	0x0368-0360	reg_dnlp_ygrid25 : : dnlp25 . unsigned , default = 32'h03680360

Table 10-2154 SRSHARP1_DNLP_26 0x52aa

Bit(s)	R/W	Default	Description
31: 0	R/W	0x0378-0370	reg_dnlp_ygrid26 : : dnlp26 . unsigned , default = 32'h03780370

Table 10-2155 SRSHARP1_DNLP_27 0x52ab

Bit(s)	R/W	Default	Description
31: 0	R/W	0x0388-0380	reg_dnlp_ygrid27 : : dnlp27 . unsigned , default = 32'h03880380

Table 10-2156 SRSHARP1_DNLP_28 0x52ac

Bit(s)	R/W	Default	Description
31: 0	R/W	0x03-a00390	reg_dnlp_ygrid28 : : dnlp28 . unsigned , default = 32'h03a00390

Table 10-2157 SRSHARP1_DNLP_29 0x52ad

Bit(s)	R/W	Default	Description
31: 0	R/W	0x03-c003b0	reg_dnlp_ygrid29 : : dnlp29 . unsigned , default = 32'h03c003b0

Table 10-2158 SRSHARP1_DNLP_30 0x52ae

Bit(s)	R/W	Default	Description
31: 0	R/W	0x03-e003d0	reg_dnlp_ygrid30 : : dnlp30 . unsigned , default = 32'h03e003d0

Table 10-2159 SRSHARP1_DNLP_31 0x52af

Bit(s)	R/W	Default	Description
31: 0	R/W	0x03f-c03f0	reg_dnlp_ygrid31 : : dnlp31 . unsigned , default = 32'h03fc03f0

Amlogic Proprietary and Confidential
Copyright © Amlogic. All rights reserved.

Table 10-2160 SRSHARP1_SHARP_SYNC_CTRL 0x52b0

Bit(s)	R/W	Default	Description
15:0	R/W	0d0	Shadow control for some setting: 0 to use VSYNC to shadow : SR all bypass : reg_sr2_bic_pknr_bypass [2] : reg_3d_mode [3] : reg_nrdeband_en11 [4]: reg_nrdeband_en10 [5]: reg_nrdeband_en1 [6]: reg_nrdeband_en0 [7]: reg_dejaggy_enable [8]: reg_sr2_sharp_prc_lr [9]: reg_sharp_pk_en [10]:reg_sharp_nr_en [11]:reg_adp_hlti_en [12]:reg_adp_hcti_en [13]:reg_adp_vlti_en [14]:reg_adp_vcti_en [15]:reg_dnlp_en

Table 10-2161 SRSHARP1_LC_INPUT_MUX 0x52b1

Bit(s)	R/W	Default	Description
31:7	R/W	0	reserved
6:4	R/W	5	reg_lcinput_ysel: local contrast luma input options 0: org_y; 1: gau_y; 2: gauadp_y; 3: edgadplpf_y; 4: nr_y;5: lti_y; 6: pk_y (before os);7: pk_y (after os)
3	R/W	0	reserved
2:0	R/W	5	reg_lcinput_csel: local contrast chroma input options 0: org_c; 1: gau_c; 2: gauadp_c; 3: edg-adplpf_c; 4: nr_c;5: cti_c; 6: pk_c

Table 10-2162 SRSHARP1_NR_GAU_YH_COEF02 0x52b2

Bit(s)	R/W	Default	Description
29:20	R/W	0d32	luma's horizontal adaptive coef0 . signed , default = 32
19:10	R/W	0d32	luma's horizontal adaptive coef1 . signed , default = 32
9:0	R/W	0d16	luma's horizontal adaptive coef2 . signed , default = 16

Table 10-2163 SRSHARP1_NR_GAU_YH_COEF34 0x52b3

Bit(s)	R/W	Default	Description
19:10	R/W	0d0	luma's horizontal adaptive coef3 . signed , default = 0
9:0	R/W	0d0	luma's horizontal adaptive coef4 . signed , default = 0

Amlogic Proprietary and Confidential
Copyright © Amlogic. All rights reserved.

Table 10-2164 SRSHARP1_NR_GAU_YV_COEF1 0x52b4

Bit(s)	R/W	Default	Description
29:20	R/W	0d32	luma's vertical adaptive coef0 . signed , default = 32
19:10	R/W	0d32	luma's vertical adaptive coef1 . signed , default = 32
9:0	R/W	0d16	luma's vertical adaptive coef2 . signed , default = 16

Table 10-2165 SRSHARP1_NR_GAU_CH_COEF02 0x52b5

Bit(s)	R/W	Default	Description
29:20	R/W	0d32	chroma's horizontal adaptive coef0 . signed , default = 32
19:10	R/W	0d32	chroma's horizontal adaptive coef1 . signed , default = 32
9:0	R/W	0d16	chroma's horizontal adaptive coef2 . signed , default = 16

Table 10-2166 SRSHARP1_NR_GAU_CH_COEF34 0x52b6

Bit(s)	R/W	Default	Description
19:10	R/W	0d0	chroma's horizontal adaptive coef3 . signed , default = 0
9:0	R/W	0d0	chroma's horizontal adaptive coef4 . signed , default = 0

Table 10-2167 SRSHARP1_NR_GAU_CV_COEF1 0x52b7

Bit(s)	R/W	Default	Description
29:20	R/W	0d32	chroma's vertical adaptive coef0 . signed , default = 32
19:10	R/W	0d32	chroma's vertical adaptive coef1 . signed , default = 32
9:0	R/W	0d16	chroma's vertical adaptive coef2 . signed , default = 16

Table 10-2168 SRSHARP1_DB_FLT_CTRL1 0x52b8

Bit(s)	R/W	Default	Description
17:16	R/W	0d2	reg_nrdeband_noise_rs .unsigned , default = 2
15:12	R/W	0d8	reg_nrdeband_randgain .unsigned , default = 8

Table 10-2169 SRSHARP1_DB_FLT_LUMA_THRD 0x52b9

Bit(s)	R/W	Default	Description
29:24	R/W	36	reg_nrdeband_luma_th3 : // unsigned , default = 36 threshold to |Y-Ylpf|, if < th[0] use lpf
21:16	R/W	28	reg_nrdeband_luma_th2 : // unsigned , default = 28 elseif <th[1] use (lpf*3 + y)/4
13:8	R/W	24	reg_nrdeband_luma_th1 : // unsigned , default = 24 elseif <th[1] use (lpf*3 + y)/4elseif <th[2] (lpf*1 + y)/2
5:0	R/W	20	reg_nrdeband_luma_th0 : // unsigned , default = 20 elseif <th[1] use (lpf*3 + y)/4elseif elseif <th[3] (lpf*1 + 3*y)/4; else

Amlogic Proprietary and Confidential
Copyright © Amlogic. All rights reserved.

Table 10-2170 SRSHARP1_DB_FLT_CHRM_THRD 0x52ba

Bit(s)	R/W	Default	Description
29:24	R/W	36	reg_nrdeband_chrm_th3 : // unsigned , default = 36 threshold to |Y-Ylpf|, if < th[0] use lpf
21:16	R/W	28	reg_nrdeband_chrm_th2 : // unsigned , default = 28 elseif <th[1] use (lpf*3 + y)/4
13:8	R/W	24	reg_nrdeband_chrm_th1 : // unsigned , default = 24 elseif <th[1] use (lpf*3 + y)/4elseif <th[2] (lpf*1 + y)/2
5:0	R/W	20	reg_nrdeband_chrm_th0 : // unsigned , default = 20 elseif <th[1] use (lpf*3 + y)/4elseif elseif <th[3] (lpf*1 + 3*y)/4; else

Table 10-2171 SRSHARP1_LC_TOP_CTRL 0x52c0

Bit(s)	R/W	Default	Description
31:17	R/W	0	reserved
16	R/W	0	reg_lc_sync_ctrl: 0 to shadow reg_lc_enable.
15:8	R/W	8	reg_lc_hblank: blank between two line.
7:5	R/W	0	reserved
4	R/W	0	reg_lc_enable: enable signal for local contrast enhancement, 1-enable; 0 disable
3:1	R/W	0	reserved
0	R/W	0	reg_lc_blkblend_mode:use bilinear interpolation between blocks, 0: no interpolation 1: blender enabled

Table 10-2172 SRSHARP1_LC_HV_NUM 0x52c1

Bit(s)	R/W	Default	Description
31:13	R/W	0	reserved
12:8	R/W	12	reg_lc_blk_hnum: lc processing region number of V, maximum to (STA_LEN_H-1) (0~12)
7:5	R/W	0	reserved
4:0	R/W	8	reg_lc_blk_vnum: lc processing region number of H, maximum to (STA_LEN_V-1) (0~8)

Table 10-2173 SRSHARP1_LC_SAT_LUT_0_1 0x52c2

Bit(s)	R/W	Default	Description
31:28	R/W	0	reserved
27:16	R/W	12	reg_lc_satur_lut_0: saturation protection curve, normalized to 4096 as 1, default = y=x^1.2
15:12	R/W	0	reserved
11:0	R/W	32	reg_lc_satur_lut_1: saturation protection curve, normalized to 4096 as 1, default = y=x^1.2

Amlogic Proprietary and Confidential
Copyright © Amlogic. All rights reserved.

Table 10-2174 SRSHARP1_LC_SAT_LUT_2_3 0x52c3

Bit(s)	R/W	Default	Description
31:28	R/W	0	reserved
27:16	R/W	56	reg_lc_satur_lut_2: saturation protection curve, normalized to 4096 as 1, default = y=x^1.2
15:12	R/W	0	reserved
11:0	R/W	84	reg_lc_satur_lut_3: saturation protection curve, normalized to 4096 as 1, default = y=x^1.2

Table 10-2175 SRSHARP1_LC_SAT_LUT_4_5 0x52c4

Bit(s)	R/W	Default	Description
31:28	R/W	0	reserved
27:16	R/W	115	reg_lc_satur_lut_4: saturation protection curve, normalized to 4096 as 1, default = y=x^1.2
15:12	R/W	0	reserved
11:0	R/W	149	reg_lc_satur_lut_5: saturation protection curve, normalized to 4096 as 1, default = y=x^1.2

Table 10-2176 SRSHARP1_LC_SAT_LUT_6_7 0x52c5

Bit(s)	R/W	Default	Description
31:28	R/W	0	reserved
27:16	R/W	185	reg_lc_satur_lut_6: saturation protection curve, normalized to 4096 as 1, default = y=x^1.2
15:12	R/W	0	reserved
11:0	R/W	223	reg_lc_satur_lut_7: saturation protection curve, normalized to 4096 as 1, default = y=x^1.2

Table 10-2177 SRSHARP1_LC_SAT_LUT_8_9 0x52c6

Bit(s)	R/W	Default	Description
31:28	R/W	0	reserved
27:16	R/W	263	reg_lc_satur_lut_8: saturation protection curve, normalized to 4096 as 1, default = y=x^1.2
15:12	R/W	0	reserved
11:0	R/W	305	reg_lc_satur_lut_9: saturation protection curve, normalized to 4096 as 1, default = y=x^1.2

Table 10-2178 SRSHARP1_LC_SAT_LUT_10_11 0x52c7

Bit(s)	R/W	Default	Description
31:28	R/W	0	reserved
27:16	R/W	348	reg_lc_satur_lut_10: saturation protection curve, normalized to 4096 as 1, default = y=x^1.2

Amlogic Proprietary and Confidential
Copyright © Amlogic. All rights reserved.

Bit(s)	R/W	Default	Description
15:12	R/W	0	reserved
11:0	R/W	393	reg_lc_satur_lut_11: saturation protection curve, normalized to 4096 as 1, default = y=x^1.2

Table 10-2179 SRSHARP1_LC_SAT_LUT_12_13 0x52c8

Bit(s)	R/W	Default	Description
31:28	R/W	0	reserved
27:16	R/W	440	reg_lc_satur_lut_12: saturation protection curve, normalized to 4096 as 1, default = y=x^1.2
15:12	R/W	0	reserved
11:0	R/W	488	reg_lc_satur_lut_13: saturation protection curve, normalized to 4096 as 1, default = y=x^1.2

Table 10-2180 SRSHARP1_LC_SAT_LUT_14_15 0x52c9

Bit(s)	R/W	Default	Description
31:28	R/W	0	reserved
27:16	R/W	537	reg_lc_satur_lut_14: saturation protection curve, normalized to 4096 as 1, default = y=x^1.2
15:12	R/W	0	reserved
11:0	R/W	588	reg_lc_satur_lut_15: saturation protection curve, normalized to 4096 as 1, default = y=x^1.2

Table 10-2181 SRSHARP1_LC_SAT_LUT_16_17 0x52ca

Bit(s)	R/W	Default	Description
31:28	R/W	0	reserved
27:16	R/W	640	reg_lc_satur_lut_16: saturation protection curve, normalized to 4096 as 1, default = y=x^1.2
15:12	R/W	0	reserved
11:0	R/W	694	reg_lc_satur_lut_17: saturation protection curve, normalized to 4096 as 1, default = y=x^1.2

Table 10-2182 SRSHARP1_LC_SAT_LUT_18_19 0x52cb

Bit(s)	R/W	Default	Description
31:28	R/W	0	reserved
27:16	R/W	748	reg_lc_satur_lut_18: saturation protection curve, normalized to 4096 as 1, default = y=x^1.2
15:12	R/W	0	reserved
11:0	R/W	804	reg_lc_satur_lut_19: saturation protection curve, normalized to 4096 as 1, default = y=x^1.2

Amlogic Proprietary and Confidential
Copyright © Amlogic. All rights reserved.

Table 10-2183 SRSHARP1_LC_SAT_LUT_20_21 0x52cc

Bit(s)	R/W	Default	Description
31:28	R/W	0	reserved
27:16	R/W	861	reg_lc_satur_lut_20: saturation protection curve, normalized to 4096 as 1, default = y=x^1.2
15:12	R/W	0	reserved
11:0	R/W	919	reg_lc_satur_lut_21: saturation protection curve, normalized to 4096 as 1, default = y=x^1.2

Table 10-2184 SRSHARP1_LC_SAT_LUT_22_23 0x52cd

Bit(s)	R/W	Default	Description
31:28	R/W	0	reserved
27:16	R/W	978	reg_lc_satur_lut_22: saturation protection curve, normalized to 4096 as 1, default = y=x^1.2
15:12	R/W	0	reserved
11:0	R/W	1038	reg_lc_satur_lut_23: saturation protection curve, normalized to 4096 as 1, default = y=x^1.2

Table 10-2185 SRSHARP1_LC_SAT_LUT_24_25 0x52ce

Bit(s)	R/W	Default	Description
31:28	R/W	0	reserved
27:16	R/W	1099	reg_lc_satur_lut_24: saturation protection curve, normalized to 4096 as 1, default = y=x^1.2
15:12	R/W	0	reserved
11:0	R/W	1161	reg_lc_satur_lut_25: saturation protection curve, normalized to 4096 as 1, default = y=x^1.2

Table 10-2186 SRSHARP1_LC_SAT_LUT_26_27 0x52cf

Bit(s)	R/W	Default	Description
31:28	R/W	0	reserved
27:16	R/W	1224	reg_lc_satur_lut_26: saturation protection curve, normalized to 4096 as 1, default = y=x^1.2
15:12	R/W	0	reserved
11:0	R/W	1287	reg_lc_satur_lut_27: saturation protection curve, normalized to 4096 as 1, default = y=x^1.2

Table 10-2187 SRSHARP1_LC_SAT_LUT_28_29 0x52d0

Bit(s)	R/W	Default	Description
31:28	R/W	0	reserved
27:16	R/W	1352	reg_lc_satur_lut_28: saturation protection curve, normalized to 4096 as 1, default = y=x^1.2

Amlogic Proprietary and Confidential
Copyright © Amlogic. All rights reserved.

Bit(s)	R/W	Default	Description
15:12	R/W	0	reserved
11:0	R/W	1418	reg_lc_satur_lut_29: saturation protection curve, normalized to 4096 as 1, default = y=x^1.2

Table 10-2188 SRSHARP1_LC_SAT_LUT_30_31 0x52d1

Bit(s)	R/W	Default	Description
31:28	R/W	0	reserved
27:16	R/W	1485	reg_lc_satur_lut_30: saturation protection curve, normalized to 4096 as 1, default = y=x^1.2
15:12	R/W	0	reserved
11:0	R/W	1552	reg_lc_satur_lut_31: saturation protection curve, normalized to 4096 as 1, default = y=x^1.2

Table 10-2189 SRSHARP1_LC_SAT_LUT_32_33 0x52d2

Bit(s)	R/W	Default	Description
31:28	R/W	0	reserved
27:16	R/W	1620	reg_lc_satur_lut_32: saturation protection curve, normalized to 4096 as 1, default = y=x^1.2
15:12	R/W	0	reserved
11:0	R/W	1690	reg_lc_satur_lut_33: saturation protection curve, normalized to 4096 as 1, default = y=x^1.2

Table 10-2190 SRSHARP1_LC_SAT_LUT_34_35 0x52d3

Bit(s)	R/W	Default	Description
31:28	R/W	0	reserved
27:16	R/W	1760	reg_lc_satur_lut_34: saturation protection curve, normalized to 4096 as 1, default = y=x^1.2
15:12	R/W	0	reserved
11:0	R/W	1830	reg_lc_satur_lut_35: saturation protection curve, normalized to 4096 as 1, default = y=x^1.2

Table 10-2191 SRSHARP1_LC_SAT_LUT_36_37 0x52d4

Bit(s)	R/W	Default	Description
31:28	R/W	0	reserved
27:16	R/W	1902	reg_lc_satur_lut_36: saturation protection curve, normalized to 4096 as 1, default = y=x^1.2
15:12	R/W	0	reserved
11:0	R/W	1974	reg_lc_satur_lut_37: saturation protection curve, normalized to 4096 as 1, default = y=x^1.2

Amlogic Proprietary and Confidential
Copyright © Amlogic. All rights reserved.

Table 10-2192 SRSHARP1_LC_SAT_LUT_38_39 0x52d5

Bit(s)	R/W	Default	Description
31:28	R/W	0	reserved
27:16	R/W	2047	reg_lc_satur_lut_38: saturation protection curve, normalized to 4096 as 1, default = y=x^1.2
15:12	R/W	0	reserved
11:0	R/W	2121	reg_lc_satur_lut_39: saturation protection curve, normalized to 4096 as 1, default = y=x^1.2

Table 10-2193 SRSHARP1_LC_SAT_LUT_40_41 0x52d6

Bit(s)	R/W	Default	Description
31:28	R/W	0	reserved
27:16	R/W	2196	reg_lc_satur_lut_40: saturation protection curve, normalized to 4096 as 1, default = y=x^1.2
15:12	R/W	0	reserved
11:0	R/W	2271	reg_lc_satur_lut_41: saturation protection curve, normalized to 4096 as 1, default = y=x^1.2

Table 10-2194 SRSHARP1_LC_SAT_LUT_42_43 0x52d7

Bit(s)	R/W	Default	Description
31:28	R/W	0	reserved
27:16	R/W	2347	reg_lc_satur_lut_42: saturation protection curve, normalized to 4096 as 1, default = y=x^1.2
15:12	R/W	0	reserved
11:0	R/W	2424	reg_lc_satur_lut_43: saturation protection curve, normalized to 4096 as 1, default = y=x^1.2

Table 10-2195 SRSHARP1_LC_SAT_LUT_44_45 0x52d8

Bit(s)	R/W	Default	Description
31:28	R/W	0	reserved
27:16	R/W	2502	reg_lc_satur_lut_44: saturation protection curve, normalized to 4096 as 1, default = y=x^1.2
15:12	R/W	0	reserved
11:0	R/W	2580	reg_lc_satur_lut_45: saturation protection curve, normalized to 4096 as 1, default = y=x^1.2

Table 10-2196 SRSHARP1_LC_SAT_LUT_46_47 0x52d9

Bit(s)	R/W	Default	Description
31:28	R/W	0	reserved
27:16	R/W	2659	reg_lc_satur_lut_46: saturation protection curve, normalized to 4096 as 1, default = y=x^1.2

Amlogic Proprietary and Confidential
Copyright © Amlogic. All rights reserved.

Bit(s)	R/W	Default	Description
15:12	R/W	0	reserved
11:0	R/W	2738	reg_lc_satur_lut_47: saturation protection curve, normalized to 4096 as 1, default = y=x^1.2

Table 10-2197 SRSHARP1_LC_SAT_LUT_48_49 0x52da

Bit(s)	R/W	Default	Description
31:28	R/W	0	reserved
27:16	R/W	2818	reg_lc_satur_lut_48: saturation protection curve, normalized to 4096 as 1, default = y=x^1.2
15:12	R/W	0	reserved
11:0	R/W	2899	reg_lc_satur_lut_49: saturation protection curve, normalized to 4096 as 1, default = y=x^1.2

Table 10-2198 SRSHARP1_LC_SAT_LUT_50_51 0x52db

Bit(s)	R/W	Default	Description
31:28	R/W	0	reserved
27:16	R/W	2981	reg_lc_satur_lut_50: saturation protection curve, normalized to 4096 as 1, default = y=x^1.2
15:12	R/W	0	reserved
11:0	R/W	3063	reg_lc_satur_lut_51: saturation protection curve, normalized to 4096 as 1, default = y=x^1.2

Table 10-2199 SRSHARP1_LC_SAT_LUT_52_53 0x52dc

Bit(s)	R/W	Default	Description
31:28	R/W	0	reserved
27:16	R/W	3146	reg_lc_satur_lut_52: saturation protection curve, normalized to 4096 as 1, default = y=x^1.2
15:12	R/W	0	reserved
11:0	R/W	3229	reg_lc_satur_lut_53: saturation protection curve, normalized to 4096 as 1, default = y=x^1.2

Table 10-2200 SRSHARP1_LC_SAT_LUT_54_55 0x52dd

Bit(s)	R/W	Default	Description
31:28	R/W	0	reserved
27:16	R/W	3313	reg_lc_satur_lut_54: saturation protection curve, normalized to 4096 as 1, default = y=x^1.2
15:12	R/W	0	reserved
11:0	R/W	3398	reg_lc_satur_lut_55: saturation protection curve, normalized to 4096 as 1, default = y=x^1.2

Amlogic Proprietary and Confidential
Copyright © Amlogic. All rights reserved.

Table 10-2201 SRSHARP1_LC_SAT_LUT_56_57 0x52de

Bit(s)	R/W	Default	Description
31:28	R/W	0	reserved
27:16	R/W	3483	reg_lc_satur_lut_56: saturation protection curve, normalized to 4096 as 1, default = y=x^1.2
15:12	R/W	0	reserved
11:0	R/W	3569	reg_lc_satur_lut_57: saturation protection curve, normalized to 4096 as 1, default = y=x^1.2

Table 10-2202 SRSHARP1_LC_SAT_LUT_58_59 0x52df

Bit(s)	R/W	Default	Description
31:28	R/W	0	reserved
27:16	R/W	3655	reg_lc_satur_lut_58: saturation protection curve, normalized to 4096 as 1, default = y=x^1.2
15:12	R/W	0	reserved
11:0	R/W	3742	reg_lc_satur_lut_59: saturation protection curve, normalized to 4096 as 1, default = y=x^1.2

Table 10-2203 SRSHARP1_LC_SAT_LUT_60_61 0x52e0

Bit(s)	R/W	Default	Description
31:28	R/W	0	reserved
27:16	R/W	3830	reg_lc_satur_lut_60: saturation protection curve, normalized to 4096 as 1, default = y=x^1.2
15:12	R/W	0	reserved
11:0	R/W	3918	reg_lc_satur_lut_61: saturation protection curve, normalized to 4096 as 1, default = y=x^1.2

Table 10-2204 SRSHARP1_LC_SAT_LUT_62 0x52e1

Bit(s)	R/W	Default	Description
31:12	R/W	0	reserved
11:0	R/W	4007	reg_lc_satur_lut_62: saturation protection curve, normalized to 4096 as 1, default = y=x^1.2

Table 10-2205 SRSHARP1_LC_CURVE_BLK_HIDX_0_1 0x52e2

Bit(s)	R/W	Default	Description
31:30	R/W	0	reserved
29:16	R/W	0	reg_lc_blk_hidx_0: block boundary x-index
15:14	R/W	0	reserved
13:0	R/W	320	reg_lc_blk_hidx_1: block boundary x-index

Amlogic Proprietary and Confidential
Copyright © Amlogic. All rights reserved.

Table 10-2206 SRSHARP1_LC_CURVE_BLK_HIDX_2_3 0x52e3

Bit(s)	R/W	Default	Description
31:30	R/W	0	reserved
29:16	R/W	640	reg_lc_blk_hidx_2: block boundary x-index
15:14	R/W	0	reserved
13:0	R/W	960	reg_lc_blk_hidx_3: block boundary x-index

Table 10-2207 SRSHARP1_LC_CURVE_BLK_HIDX_4_5 0x52e4

Bit(s)	R/W	Default	Description
31:30	R/W	0	reserved
29:16	R/W	1280	reg_lc_blk_hidx_4: block boundary x-index
15:14	R/W	0	reserved
13:0	R/W	1600	reg_lc_blk_hidx_5: block boundary x-index

Table 10-2208 SRSHARP1_LC_CURVE_BLK_HIDX_6_7 0x52e5

Bit(s)	R/W	Default	Description
31:30	R/W	0	reserved
29:16	R/W	1920	reg_lc_blk_hidx_6: block boundary x-index
15:14	R/W	0	reserved
13:0	R/W	2240	reg_lc_blk_hidx_7: block boundary x-index

Table 10-2209 SRSHARP1_LC_CURVE_BLK_HIDX_8_9 0x52e6

Bit(s)	R/W	Default	Description
31:30	R/W	0	reserved
29:16	R/W	2560	reg_lc_blk_hidx_8: block boundary x-index
15:14	R/W	0	reserved
13:0	R/W	2880	reg_lc_blk_hidx_9: block boundary x-index

Table 10-2210 SRSHARP1_LC_CURVE_BLK_HIDX_10_11 0x52e7

Bit(s)	R/W	Default	Description
31:30	R/W	0	reserved
29:16	R/W	3200	reg_lc_blk_hidx_10: block boundary x-index
15:14	R/W	0	reserved
13:0	R/W	3520	reg_lc_blk_hidx_11: block boundary x-index

Amlogic Proprietary and Confidential
Copyright © Amlogic. All rights reserved.

Table 10-2211 SRSHARP1_LC_CURVE_BLK_HIDX_12 0x52e8

Bit(s)	R/W	Default	Description
31:14	R/W	0	reserved
13:0	R/W	3840	reg_lc_blk_hidx_1: block boundary x-index

Table 10-2212 SRSHARP1_LC_CURVE_BLK_VIDX_0_1 0x52e9

Bit(s)	R/W	Default	Description
31:30	R/W	0	reserved
29:16	R/W	0	reg_lc_blk_vidx_0: block boundary y-index
15:14	R/W	0	reserved
13:0	R/W	270	reg_lc_blk_vidx_1: block boundary y-index

Table 10-2213 SRSHARP1_LC_CURVE_BLK_VIDX_2_3 0x52ea

Bit(s)	R/W	Default	Description
31:30	R/W	0	reserved
29:16	R/W	540	reg_lc_blk_vidx_2: block boundary y-index
15:14	R/W	0	reserved
13:0	R/W	810	reg_lc_blk_vidx_3: block boundary y-index

Table 10-2214 SRSHARP1_LC_CURVE_BLK_VIDX_4_5 0x52eb

Bit(s)	R/W	Default	Description
31:30	R/W	0	reserved
29:16	R/W	1080	reg_lc_blk_vidx_4: block boundary y-index
15:14	R/W	0	reserved
13:0	R/W	1350	reg_lc_blk_vidx_5: block boundary y-index

Table 10-2215 SRSHARP1_LC_CURVE_BLK_VIDX_6_7 0x52ec

Bit(s)	R/W	Default	Description
31:30	R/W	0	reserved
29:16	R/W	1620	reg_lc_blk_vidx_6: block boundary y-index
15:14	R/W	0	reserved
13:0	R/W	1890	reg_lc_blk_vidx_7: block boundary y-index

Table 10-2216 SRSHARP1_LC_CURVE_BLK_HIDX_8 0x52ed

Bit(s)	R/W	Default	Description
31:14	R/W	0	reserved
13:0	R/W	2160	reg_lc_blk_vidx_8: block boundary y-index

Amlogic Proprietary and Confidential
Copyright © Amlogic. All rights reserved.

Table 10-2217 SRSHARP1_LC_YUV2RGB_MAT_0_1 0x52ee

Bit(s)	R/W	Default	Description
31:29	R/W	0	reserved
28:16	R/W	1192	reg_lc_yuv2rgb_mat3x3_0: yuv2rgb 3x3 matrix
15:13	R/W	0	reserved
12:0	R/W	0	reg_lc_yuv2rgb_mat3x3_1: yuv2rgb 3x3 matrix

Table 10-2218 SRSHARP1_LC_YUV2RGB_MAT_2_3 0x52ef

Bit(s)	R/W	Default	Description
31:29	R/W	0	reserved
28:16	R/W	1836	reg_lc_yuv2rgb_mat3x3_2: yuv2rgb 3x3 matrix
15:13	R/W	0	reserved
12:0	R/W	1192	reg_lc_yuv2rgb_mat3x3_3: yuv2rgb 3x3 matrix

Table 10-2219 SRSHARP1_LC_YUV2RGB_MAT_4_5 0x52f0

Bit(s)	R/W	Default	Description
31:29	R/W	0	reserved
28:16	R/W	-218	reg_lc_yuv2rgb_mat3x3_4: yuv2rgb 3x3 matrix
15:13	R/W	0	reserved
12:0	R/W	-514	reg_lc_yuv2rgb_mat3x3_5: yuv2rgb 3x3 matrix

Table 10-2220 SRSHARP1_LC_YUV2RGB_MAT_6_7 0x52f1

Bit(s)	R/W	Default	Description
31:29	R/W	0	reserved
28:16	R/W	1192	reg_lc_yuv2rgb_mat3x3_6: yuv2rgb 3x3 matrix
15:13	R/W	0	reserved
12:0	R/W	2166	reg_lc_yuv2rgb_mat3x3_7: yuv2rgb 3x3 matrix

Table 10-2221 SRSHARP1_LC_YUV2RGB_MAT_8 0x52f2

Bit(s)	R/W	Default	Description
31:13	R/W	0	reserved
12:0	R/W	0	reg_lc_yuv2rgb_mat3x3_8: yuv2rgb 3x3 matrix

Amlogic Proprietary and Confidential
Copyright © Amlogic. All rights reserved.

Table 10-2222 SRSHARP1_LC_RGB2YUV_MAT_0_1 0x52f3

Bit(s)	R/W	Default	Description
31:29	R/W	0	reserved
28:16	R/W	187	reg_lc_rgb2yuv_mat3x3_0: rgb2yuv 3x3 matrix
15:13	R/W	0	reserved
12:0	R/W	629	reg_lc_rgb2yuv_mat3x3_1: rgb2yuv 3x3 matrix

Table 10-2223 SRSHARP1_LC_RGB2YUV_MAT_2_3 0x52f4

Bit(s)	R/W	Default	Description
31:29	R/W	0	reserved
28:16	R/W	63	reg_lc_rgb2yuv_mat3x3_2: rgb2yuv 3x3 matrix
15:13	R/W	0	reserved
12:0	R/W	-103	reg_lc_rgb2yuv_mat3x3_3: rgb2yuv 3x3 matrix

Table 10-2224 SRSHARP1_LC_RGB2YUV_MAT_4_5 0x52f5

Bit(s)	R/W	Default	Description
31:29	R/W	0	reserved
28:16	R/W	-346	reg_lc_rgb2yuv_mat3x3_4: rgb2yuv 3x3 matrix
15:13	R/W	0	reserved
12:0	R/W	450	reg_lc_rgb2yuv_mat3x3_5: rgb2yuv 3x3 matrix

Table 10-2225 SRSHARP1_LC_RGB2YUV_MAT_6_7 0x52f6

Bit(s)	R/W	Default	Description
31:29	R/W	0	reserved
28:16	R/W	450	reg_lc_rgb2yuv_mat3x3_6: rgb2yuv 3x3 matrix
15:13	R/W	0	reserved
12:0	R/W	-409	reg_lc_rgb2yuv_mat3x3_7: rgb2yuv 3x3 matrix

Table 10-2226 SRSHARP1_LC_RGB2YUV_MAT_8 0x52f7

Bit(s)	R/W	Default	Description
31:13	R/W	0	reserved
12:0	R/W	41	reg_lc_rgb2yuv_mat3x3_8: rgb2yuv 3x3 matrix

Table 10-2227 SRSHARP1_LC_YUV2RGB_OFST 0x52f8

Bit(s)	R/W	Default	Description
31:28	R/W	0	reserved
27:16	R/W	64	reg_lc_yuv2rgb_ofset_0: yuv2rgb pre-offset to yuv

Amlogic Proprietary and Confidential
Copyright © Amlogic. All rights reserved.

Bit(s)	R/W	Default	Description
15:12	R/W	0	reserved
11:0	R/W	512	reg_lc_yuv2rgb_ofset_1: yuv2rgb pre-offset to yuv

Table 10-2228 SRSHARP1_LC_YUV2RGB_CLIP 0x52f9

Bit(s)	R/W	Default	Description
31:30	R/W	0	reserved
29:28	R/W	0	reg_lc_yuv2rgb_rs: matrix normalization right shift extra bits, norm= (1<<(8+rs))
27:16	R/W	0	reg_lc_yuv2rgb_clip_0: yuv2rgb converted RGB clipping range
15:12	R/W	0	reserved
11:0	R/W	1023	reg_lc_yuv2rgb_clip_1: yuv2rgb converted RGB clipping range

Table 10-2229 SRSHARP1_LC_RGB2YUV_OFST 0x52fa

Bit(s)	R/W	Default	Description
31:28	R/W	0	reserved
27:16	R/W	64	reg_lc_rgb2yuv_ofset_0: rgb2yuv post-offset to yuv
15:12	R/W	0	reserved
11:0	R/W	512	reg_lc_rgb2yuv_ofset_1: rgb2yuv post-offset to yuv

Table 10-2230 SRSHARP1_LC_RGB2YUV_CLIP 0x52fb

Bit(s)	R/W	Default	Description
31:30	R/W	0	reserved
29:28	R/W	0	reg_lc_rgb2yuv_rs: matrix normalization right shift extra bits, norm= (1<<(10+rs))
27:16	R/W	0	reg_lc_rgb2yuv_clip_0: rgb2yuv converted YUV clipping range
15:12	R/W	0	reserved
11:0	R/W	1023	reg_lc_rgb2yuv_clip_1: rgb2yuv converted YUV clipping range

Table 10-2231 SRSHARP1_LC_MAP_RAM_CTRL 0x52fc

Bit(s)	R/W	Default	Description
31:1	R/W	0	reserved
0	R/W	0	reg_lc_cbus2ram_en: 1 to enable CBUS write/read data to/from LC MAP RAM

Table 10-2232 SRSHARP1_LC_MAP_RAM_ADDR 0x52fd

Bit(s)	R/W	Default	Description
31	W	0	1 to pre-read from LC MAP RAM to CBUS
30:7	R/W	0	reserved

Amlogic Proprietary and Confidential
Copyright © Amlogic. All rights reserved.

Bit(s)	R/W	Default	Description
6:4	R/W	0	Vidx of LC MAP RAM
3:0	R/W	0	Hidx of LC MAP RA:

Table 10-2233 SRSHARP1_LC_MAP_RAM_DATA 0x52fe

Bit(s)	R/W	Default	Description
31:30	R/W	0	reserved
29:0	R/W	0	LC MAP RAM data for write/read

Table 10-2234 SRSHARP1_FMETER_CTRL 0x5289

Bit(s)	R/W	Default	Description
11:10	R/W	0	reg_fmeter_vwin_mm : vertical window size, 0:1 cloumn,1:3cloumn, 2or3:5cloumn.unsigned,default = 0
9:8	R/W	0	reg_fmeter_hwin_mm : horizontal window size, 0:1x7, 1:1x9, 2or3: 1x11 .unsigned , default = 0
7	R/W	0	reg_fmeter_d2_mode : selectino filter D2, 0: [0 -2 0 0 2], 1: [-2 0 0 0 2] .unsigned , default = 0
6	R/W	0	reg_fmeter_v2_mode : selection filter V2, 0: [0 -2 0 0 2], 1: [-2 0 0 0 2] .unsigned , default = 0
5:4	R/W	0	reg_fmeter_h2_mode: selection filter H2, 0: [0 0 0 -2 0 0 2 0 0], 1: [-2 0 0 0 2], 2or3: [0-2 0 0 0 0 0 2 0] .unsigned , default = 0
0	R/W	0	reg_freq_meter_en: freq meter enable .unsigned , default = 0

Table 10-2235 SRSHARP1_FMETER_WIN_HOR 0x528a

Bit(s)	R/W	Default	Description
28:16	R/W	1920	reg_fmeter_xwin_ed: window location: hend .unsigned , default = 1920
12:0	R/W	0	reg_fmeter_xwin_st: window location: hstart .unsigned , default = 0

Table 10-2236 SRSHARP1_FMETER_WIN_VER 0x528b

Bit(s)	R/W	Default	Description
28:16	R/W	1080	reg_fmeter_ywin_ed: window location: vend .unsigned , default = 1080
12:0	R/W	0	reg_fmeter_ywin_st: window location: vstart .unsigned , default = 0

Table 10-2237 SRSHARP1_FMETER_CORING 0x528c

Bit(s)	R/W	Default	Description
31:24	R/W	4	reg_fmeter_low_bound: low bound for threshold .unsigned , default = 4
23:16	R/W	4	reg_fmeter_coring_d: coring of diff before compare with threshold for diagonal frequency .unsigned , default = 4

Amlogic Proprietary and Confidential
Copyright © Amlogic. All rights reserved.

Bit(s)	R/W	Default	Description
15:8	R/W	4	reg_fmeter_coring_v: coring of diff before compare with threshold for vertical frequency .unsigned , default = 4
7:0	R/W	4	reg_fmeter_coring_h: coring of diff before compare with threshold for horizontal frequency .unsigned , default = 4

Table 10-2238 SRSHARP1_FMETER_RATIO_H 0x528d

Bit(s)	R/W	Default	Description
21:16	R/W	16	reg_fmeter_ratio_h2: ratio for threshold calc. for horizontal frequency, 16 is normalized as "1" .unsigned , default = 16
13:8	R/W	16	reg_fmeter_ratio_h1: ratio for threshold calc. for horizontal frequency, 16 is normalized as "1" .unsigned , default = 16
5:0	R/W	16	reg_fmeter_ratio_h0: ratio for threshold calc. for horizontal frequency, 16 is normalized as "1" .unsigned , default = 16

Table 10-2239 SRSHARP1_FMETER_RATIO_V 0x528e

Bit(s)	R/W	Default	Description
21:16	R/W	16	reg_fmeter_ratio_v2: ratio for threshold calc. for vertical frequency, 16 is normalized as "1" .unsigned , default = 16
13:8	R/W	16	reg_fmeter_ratio_v1: ratio for threshold calc. for vertical frequency, 16 is normalized as "1" .unsigned , default = 16
5:0	R/W	16	reg_fmeter_ratio_v0: ratio for threshold calc. for vertical frequency, 16 is normalized as "1" .unsigned , default = 16

Table 10-2240 SRSHARP1_FMETER_RATIO_D 0x528f

Bit(s)	R/W	Default	Description
21:16	R/W	16	reg_fmeter_ratio_d2: ratio for threshold calc. for diagonal frequency, 16 is normalized as "1" .unsigned , default = 16
13:8	R/W	16	reg_fmeter_ratio_d1: ratio for threshold calc. for diagonal frequency, 16 is normalized as "1" .unsigned , default = 16
5:0	R/W	16	reg_fmeter_ratio_d0: ratio for threshold calc. for diagonal frequency, 16 is normalized as "1" .unsigned , default = 16

Table 10-2241 SRSHARP1_RO_FMETER_HCNT_TYPE0 0x5246

Bit(s)	R/W	Default	Description
31:0	RO	0	ro_fmeter_hcnt_type0: count for horizontal frequency

Table 10-2242 SRSHARP1_RO_FMETER_HCNT_TYPE1 0x5247

Bit(s)	R/W	Default	Description
31:0	RO	0	ro_fmeter_hcnt_type1: count for horizontal frequency

Amlogic Proprietary and Confidential
Copyright © Amlogic. All rights reserved.

Table 10-2243 SRSHARP1_RO_FMETER_HCNT_TYPE2 0x5248

Bit(s)	R/W	Default	Description
31:0	RO	0	ro_fmeter_hcnt_type2: count for horizontal frequency

Table 10-2244 SRSHARP1_RO_FMETER_HCNT_TYPE3 0x5249

Bit(s)	R/W	Default	Description
31:0	RO	0	ro_fmeter_hcnt_type3: count for horizontal frequency

Table 10-2245 SRSHARP1_RO_FMETER_VCNT_TYPE0 0x524a

Bit(s)	R/W	Default	Description
31:0	RO	0	ro_fmeter_vcnt_type0: count for vertical frequency

Table 10-2246 SRSHARP1_RO_FMETER_VCNT_TYPE1 0x524b

Bit(s)	R/W	Default	Description
31:0	RO	0	ro_fmeter_vcnt_type1: count for vertical frequency

Table 10-2247 SRSHARP1_RO_FMETER_VCNT_TYPE2 0x524c

Bit(s)	R/W	Default	Description
31:0	RO	0	ro_fmeter_vcnt_type2: count for vertical frequency

Table 10-2248 SRSHARP1_RO_FMETER_VCNT_TYPE3 0x524d

Bit(s)	R/W	Default	Description
31:0	RO	0	ro_fmeter_vcnt_type3: count for vertical frequency

Table 10-2249 SRSHARP1_RO_FMETER_PDCNT_TYPE0 0x524e

Bit(s)	R/W	Default	Description
31:0	RO	0	ro_fmeter_pdcnt_type0: count for positive diagonal frequency

Table 10-2250 SRSHARP1_RO_FMETER_PDCNT_TYPE1 0x524f

Bit(s)	R/W	Default	Description
31:0	RO	0	ro_fmeter_pdcnt_type1: count for positive diagonal frequency

Table 10-2251 SRSHARP1_RO_FMETER_PDCNT_TYPE2 0x5250

Bit(s)	R/W	Default	Description
31:0	RO	0	ro_fmeter_pdcnt_type2: count for positive diagonal frequency

Amlogic Proprietary and Confidential
Copyright © Amlogic. All rights reserved.

Table 10-2252 SRSHARP1_RO_FMETER_PDCNT_TYPE3 0x5251

Bit(s)	R/W	Default	Description
31:0	RO	0	ro_fmeter_pdcnt_type3: count for positive diagonal frequency

Table 10-2253 SRSHARP1_RO_FMETER_NDCNT_TYPE0 0x5252

Bit(s)	R/W	Default	Description
31:0	RO	0	ro_fmeter_ndcnt_type0: count for negitive diagonal frequency

Table 10-2254 SRSHARP1_RO_FMETER_NDCNT_TYPE1 0x5253

Bit(s)	R/W	Default	Description
31:0	RO	0	ro_fmeter_ndcnt_type1: count for negitive diagonal frequency

Table 10-2255 SRSHARP1_RO_FMETER_NDCNT_TYPE2 0x5254

Bit(s)	R/W	Default	Description
31:0	RO	0	ro_fmeter_ndcnt_type2: count for negitive diagonal frequency

Table 10-2256 SRSHARP1_RO_FMETER_NDCNT_TYPE3 0x5255

Bit(s)	R/W	Default	Description
31:0	RO	0	ro_fmeter_ndcnt_type3: count for negitive diagonal frequency

Table 10-2257 SRSHARP1_SR7_DRTLPF_EN 0x5300

Bit(s)	R/W	Default	Description
31:11			reserved
10	RW	0	reg_sr7_drtlpf_beta_en2: enable of direction ambiguity protection for drt_lpf, beta for drt filter coef base on the x=cal_drt_dif8(min_idx,min2_idx)
9	RW	0	reg_sr7_drtlpf_beta_en1: enable of direction ambiguity protection for drt_lpf, beta for drt filter coef base on the x=cal_drt_dif8(min_idx,min2_idx)
8	RW	0	reg_sr7_drtlpf_beta_en0: enable of direction ambiguity protection for drt_lpf, beta for drt filter coef base on the x=cal_drt_dif8(min_idx,min2_idx)
7:6			reserved
5	RW	0	reg_sr7_drtlpf_edge_en2: enable of direction lpf based on edge strength
4	RW	0	reg_sr7_drtlpf_edge_en1: enable of direction lpf based on edge strength
3	RW	0	reg_sr7_drtlpf_edge_en0: enable of direction lpf based on edge strength
2	RW	1	reg_sr7_drtlpf_sdfd_en2: sdfd gamma (HF burst compare to real edge protection) enable

Amlogic Proprietary and Confidential
Copyright © Amlogic. All rights reserved.

Bit(s)	R/W	Default	Description
1	RW	1	reg_sr7_drtlpf_sdfd_en1: sdfd gamma (HF burst compare to real edge protection) enable.
0	RW	1	reg_sr7_drtlpf_sdfd_en0: sdfd gamma (HF burst compare to real edge protection) enable.

Table 10-2258 SRSHARP1_SR7_DRTLPF_BETA 0x5301

Bit(s)	R/W	Default	Description
31:16			reserved
15:12	RW	0	reg_sr7_drtlpf_beta3: beta for drt filter coef base on the x=cal_drt_dif8(min_idx, min2_idx)
11:8	RW	4	reg_sr7_drtlpf_beta2: beta for drt filter coef base on the x=cal_drt_dif8(min_idx, min2_idx)
7:4	RW	8	reg_sr7_drtlpf_beta1: beta for drt filter coef base on the x=cal_drt_dif8(min_idx, min2_idx)
3:0	RW	15	reg_sr7_drtlpf_beta0: beta for drt filter coef base on the x=cal_drt_dif8(min_idx, min2_idx), beta = lut[x-1], the larger of x, means the higher possibility for ambiguilty, beta=0 use org wo lpf.

Table 10-2259 SRSHARP1_SR7_PKBLD_BETA 0x5302

Bit(s)	R/W	Default	Description
31:16			reserved
15:12	RW	0	reg_sr7_pkdrtbld_beta3: beta for drt and cir blend base on the x=cal_drt_dif8 (min_idx,min2_idx)
11:8	RW	4	reg_sr7_pkdrtbld_beta2: beta for drt and cir blend base on the x=cal_drt_dif8 (min_idx,min2_idx)
7:4	RW	8	reg_sr7_pkdrtbld_beta1: beta for drt and cir blend base on the x=cal_drt_dif8 (min_idx,min2_idx)
3:0	RW	15	reg_sr7_pkdrtbld_beta0: beta for drt and cir blend base on the x=cal_drt_dif8 (min_idx,min2_idx), beta = lut[x-1], the larger of x, means the higher possibility for ambiguilty, beta=0 use org wo lpf.

Table 10-2260 SRSHARP1_SR7_XLTIBLD_BETA 0x5303

Bit(s)	R/W	Default	Description
31:16			reserved
15:12	RW	0	reg_sr7_xlti_dcbld_beta3: beta for denoise and org dc blend base on the x=cal_ drt_dif8(min_idx,min2_idx)
11:8	RW	4	reg_sr7_xlti_dcbld_beta2: beta for denoise and org dc blend base on the x=cal_ drt_dif8(min_idx,min2_idx)
7:4	RW	8	reg_sr7_xlti_dcbld_beta1: beta for denoise and org dc blend base on the x=cal_ drt_dif8(min_idx,min2_idx)
3:0	RW	15	reg_sr7_xlti_dcbld_beta0: beta for denoise and org dc blend base on the x=cal_ drt_dif8(min_idx,min2_idx) beta = lut[x-1], the larger of x, means the higher possibility for ambiguilty, beta=0 use org wo lpf.

Amlogic Proprietary and Confidential
Copyright © Amlogic. All rights reserved.

Table 10-2261 SRSHARP1_SR7_DRTLPF_EDGE0 0x5304

Bit(s)	R/W	Default	Description
31:28	RW	15	reg_sr7_drtlpf_edge7: edge lamda for drt lpf base on max_sad [0:16:128~255]
27:24	RW	15	reg_sr7_drtlpf_edge6: edge lamda for drt lpf base on max_sad [0:16:128~255]
23:20	RW	15	reg_sr7_drtlpf_edge5: edge lamda for drt lpf base on max_sad [0:16:128~255]
19:16	RW	15	reg_sr7_drtlpf_edge4: edge lamda for drt lpf base on max_sad [0:16:128~255]
15:12	RW	15	reg_sr7_drtlpf_edge3: edge lamda for drt lpf base on max_sad [0:16:128~255]
11:8	RW	15	reg_sr7_drtlpf_edge2: edge lamda for drt lpf base on max_sad [0:16:128~255]
7:4	RW	15	reg_sr7_drtlpf_edge1: edge lamda for drt lpf base on max_sad [0:16:128~255]
3:0	RW	15	reg_sr7_drtlpf_edge0: edge lamda for drt lpf base on max_sad [0:16:128~255]

Table 10-2262 SRSHARP1_SR7_DRTLPF_EDGE1 0x5305

Bit(s)	R/W	Default	Description
31:28	RW	15	reg_sr7_drtlpf_edge15: edge lamda for drt lpf base on max_sad [0:16:128~255]
27:24	RW	15	reg_sr7_drtlpf_edge14: edge lamda for drt lpf base on max_sad [0:16:128~255]
23:20	RW	15	reg_sr7_drtlpf_edge13: edge lamda for drt lpf base on max_sad [0:16:128~255]
19:16	RW	15	reg_sr7_drtlpf_edge12: edge lamda for drt lpf base on max_sad [0:16:128~255]
15:12	RW	15	reg_sr7_drtlpf_edge11: edge lamda for drt lpf base on max_sad [0:16:128~255]
11:8	RW	15	reg_sr7_drtlpf_edge10: edge lamda for drt lpf base on max_sad [0:16:128~255]
7:4	RW	15	reg_sr7_drtlpf_edge9: edge lamda for drt lpf base on max_sad [0:16:128~255]
3:0	RW	15	reg_sr7_drtlpf_edge8: edge lamda for drt lpf base on max_sad [0:16:128~255]

Table 10-2263 SRSHARP1_SR7_DRTLPF_SDCOR0 0x5306

Bit(s)	R/W	Default	Description
31:28	RW	15	reg_sr7_drtlpf_sdcor7: gamma for drt lpf base on SD'[0:16:128~255]
27:24	RW	15	reg_sr7_drtlpf_sdcor6: gamma for drt lpf base on SD'[0:16:128~255]
23:20	RW	15	reg_sr7_drtlpf_sdcor5: gamma for drt lpf base on SD'[0:16:128~255]
19:16	RW	15	reg_sr7_drtlpf_sdcor4: gamma for drt lpf base on SD'[0:16:128~255]
15:12	RW	15	reg_sr7_drtlpf_sdcor3: gamma for drt lpf base on SD'[0:16:128~255]
11:8	RW	15	reg_sr7_drtlpf_sdcor2: gamma for drt lpf base on SD'[0:16:128~255]
7:4	RW	15	reg_sr7_drtlpf_sdcor1: gamma for drt lpf base on SD'[0:16:128~255]
3:0	RW	15	reg_sr7_drtlpf_sdcor0: gamma for drt lpf base on SD'[0:16:128~255]

Amlogic Proprietary and Confidential
Copyright © Amlogic. All rights reserved.

Table 10-2264 SRSHARP1_SR7_DRTLPF_SDCOR1 0x5307

Bit(s)	R/W	Default	Description
31:28	RW	15	reg_sr7_drtlpf_sdcor15: gamma for drt lpf base on SD'[0:16:128~255]
27:24	RW	15	reg_sr7_drtlpf_sdcor14: gamma for drt lpf base on SD'[0:16:128~255]
23:20	RW	15	reg_sr7_drtlpf_sdcor13: gamma for drt lpf base on SD'[0:16:128~255]
19:16	RW	15	reg_sr7_drtlpf_sdcor12: gamma for drt lpf base on SD'[0:16:128~255]
15:12	RW	15	reg_sr7_drtlpf_sdcor11: gamma for drt lpf base on SD'[0:16:128~255]
11:8	RW	15	reg_sr7_drtlpf_sdcor10: gamma for drt lpf base on SD'[0:16:128~255]
7:4	RW	15	reg_sr7_drtlpf_sdcor9: gamma for drt lpf base on SD'[0:16:128~255]
3:0	RW	15	reg_sr7_drtlpf_sdcor8: gamma for drt lpf base on SD'[0:16:128~255]

Table 10-2265 SRSHARP1_SR7_CTIGAIN_SDCOR0 0x5308

Bit(s)	R/W	Default	Description
31:28	RW	15	reg_sr7_ctigain_sdcor7: adaptive gamma for cti boost gain base on SD'[0:16:128~255]
27:24	RW	15	reg_sr7_ctigain_sdcor6: adaptive gamma for cti boost gain base on SD'[0:16:128~255]
23:20	RW	15	reg_sr7_ctigain_sdcor5: adaptive gamma for cti boost gain base on SD'[0:16:128~255]
19:16	RW	15	reg_sr7_ctigain_sdcor4: adaptive gamma for cti boost gain base on SD'[0:16:128~255]
15:12	RW	15	reg_sr7_ctigain_sdcor3: adaptive gamma for cti boost gain base on SD'[0:16:128~255]
11:8	RW	15	reg_sr7_ctigain_sdcor2: adaptive gamma for cti boost gain base on SD'[0:16:128~255]
7:4	RW	15	reg_sr7_ctigain_sdcor1: adaptive gamma for cti boost gain base on SD'[0:16:128~255]
3:0	RW	15	reg_sr7_ctigain_sdcor0: adaptive gamma for cti boost gain base on SD'[0:16:128~255]

Table 10-2266 SRSHARP1_SR7_CTIGAIN_SDCOR1 0x5309

Bit(s)	R/W	Default	Description
31:28	RW	15	reg_sr7_ctigain_sdcor15: adaptive gamma for cti boost gain base on SD'[0:16:128~255]
27:24	RW	15	reg_sr7_ctigain_sdcor14: adaptive gamma for cti boost gain base on SD'[0:16:128~255]
23:20	RW	15	reg_sr7_ctigain_sdcor13: adaptive gamma for cti boost gain base on SD'[0:16:128~255]
19:16	RW	15	reg_sr7_ctigain_sdcor12: adaptive gamma for cti boost gain base on SD'[0:16:128~255]
15:12	RW	15	reg_sr7_ctigain_sdcor11: adaptive gamma for cti boost gain base on SD'[0:16:128~255]

Amlogic Proprietary and Confidential
Copyright © Amlogic. All rights reserved.

Bit(s)	R/W	Default	Description
11:8	RW	15	reg_sr7_ctigain_sdcor10: adaptive gamma for cti boost gain base on SD'[0:16:128~255]
7:4	RW	15	reg_sr7_ctigain_sdcor9: adaptive gamma for cti boost gain base on SD'[0:16:128~255]
3:0	RW	15	reg_sr7_ctigain_sdcor8: adaptive gamma for cti boost gain base on SD'[0:16:128~255]

Table 10-2267 SRSHARP1_SR7_LTIGAIN_SDCOR0 0x530a

Bit(s)	R/W	Default	Description
31:28	RW	15	reg_sr7_ltigain_sdcor7: adaptive gamma for lti boost gain base on SD'[0:16:128~255]
27:24	RW	15	reg_sr7_ltigain_sdcor6: adaptive gamma for lti boost gain base on SD'[0:16:128~255]
23:20	RW	15	reg_sr7_ltigain_sdcor5: adaptive gamma for lti boost gain base on SD'[0:16:128~255]
19:16	RW	15	reg_sr7_ltigain_sdcor4: adaptive gamma for lti boost gain base on SD'[0:16:128~255]
15:12	RW	15	reg_sr7_ltigain_sdcor3: adaptive gamma for lti boost gain base on SD'[0:16:128~255]
11:8	RW	15	reg_sr7_ltigain_sdcor2: adaptive gamma for lti boost gain base on SD'[0:16:128~255]
7:4	RW	15	reg_sr7_ltigain_sdcor1: adaptive gamma for lti boost gain base on SD'[0:16:128~255]
3:0	RW	15	reg_sr7_ltigain_sdcor0: adaptive gamma for lti boost gain base on SD'[0:16:128~255]

Table 10-2268 SRSHARP1_SR7_LTIGAIN_SDCOR1 0x530b

Bit(s)	R/W	Default	Description
31:28	RW	15	reg_sr7_ltigain_sdcor15: adaptive gamma for lti boost gain base on SD'[0:16:128~255]
27:24	RW	15	reg_sr7_ltigain_sdcor14: adaptive gamma for lti boost gain base on SD'[0:16:128~255]
23:20	RW	15	reg_sr7_ltigain_sdcor13: adaptive gamma for lti boost gain base on SD'[0:16:128~255]
19:16	RW	15	reg_sr7_ltigain_sdcor12: adaptive gamma for lti boost gain base on SD'[0:16:128~255]
15:12	RW	15	reg_sr7_ltigain_sdcor11: adaptive gamma for lti boost gain base on SD'[0:16:128~255]
11:8	RW	15	reg_sr7_ltigain_sdcor10: adaptive gamma for lti boost gain base on SD'[0:16:128~255]
7:4	RW	15	reg_sr7_ltigain_sdcor9: adaptive gamma for lti boost gain base on SD'[0:16:128~255]
3:0	RW	15	reg_sr7_ltigain_sdcor8: adaptive gamma for lti boost gain base on SD'[0:16:128~255]

Amlogic Proprietary and Confidential
Copyright © Amlogic. All rights reserved.

Table 10-2269 SRSHARP1_SR7_HLTIBPF_TAP0 0x530c

Bit(s)	R/W	Default	Description
31:24	RW	0	reg_sr7_hlti_bpf_tap153: tap15 BPF for hlti (gain3), only store half of the filter normalized to 256 as 1.0,signed
23:16	RW	-34	reg_sr7_hlti_bpf_tap152: tap15 BPF for hlti (gain3), only store half of the filter normalized to 256 as 1.0,signed
15:8	RW	-1	reg_sr7_hlti_bpf_tap151: tap15 BPF for hlti (gain3), only store half of the filter normalized to 256 as 1.0,signed
7:0	RW	120	reg_sr7_hlti_bpf_tap150: tap15 BPF for hlti (gain3), only store half of the filter normalized to 256 as 1.0,signed

Table 10-2270 SRSHARP1_SR7_HLTIBPF_TAP1 0x530d

Bit(s)	R/W	Default	Description
31:24	RW	2	reg_sr7_hlti_bpf_tap157: tap15 BPF for hlti (gain3), only store half of the filter normalized to 256 as 1.0,signed
23:16	RW	-7	reg_sr7_hlti_bpf_tap156: tap15 BPF for hlti (gain3), only store half of the filter normalized to 256 as 1.0,signed
15:8	RW	1	reg_sr7_hlti_bpf_tap155: tap15 BPF for hlti (gain3), only store half of the filter normalized to 256 as 1.0,signed
7:0	RW	-21	reg_sr7_hlti_bpf_tap154: tap15 BPF for hlti (gain3), only store half of the filter normalized to 256 as 1.0,signed

Table 10-2271 SRSHARP1_SR7_HCTIBPF_TAP0 0x530e

Bit(s)	R/W	Default	Description
31:24	RW	0	reg_sr7_clti_bpf_tap153: tap15 BPF for clti (gain3), only store half of the filter normalized to 256 as 1.0,signed
23:16	RW	-34	reg_sr7_clti_bpf_tap152: tap15 BPF for clti (gain3), only store half of the filter normalized to 256 as 1.0,signed
15:8	RW	-1	reg_sr7_clti_bpf_tap151: tap15 BPF for clti (gain3), only store half of the filter normalized to 256 as 1.0,signed
7:0	RW	120	reg_sr7_clti_bpf_tap150: tap15 BPF for clti (gain3), only store half of the filter normalized to 256 as 1.0,signed

Table 10-2272 SRSHARP1_SR7_HCTIBPF_TAP1 0x530f

Bit(s)	R/W	Default	Description
31:24	RW	2	reg_sr7_clti_bpf_tap157: tap15 BPF for clti (gain3), only store half of the filter normalized to 256 as 1.0,signed
23:16	RW	-7	reg_sr7_clti_bpf_tap156: tap15 BPF for clti (gain3), only store half of the filter normalized to 256 as 1.0,signed

Amlogic Proprietary and Confidential
Copyright © Amlogic. All rights reserved.

Bit(s)	R/W	Default	Description
15:8	RW	1	reg_sr7_clti_bpf_tap155: tap15 BPF for clti (gain3), only store half of the filter normalized to 256 as 1.0,signed
7:0	RW	-21	reg_sr7_clti_bpf_tap154: tap15 BPF for clti (gain3), only store half of the filter normalized to 256 as 1.0,signed

Table 10-2273 SRSHARP1_SR7_PKLONGBPF_HTAP0 0x5310

Bit(s)	R/W	Default	Description
31:24	RW	-24	reg_sr7_pk_long_bpf_hztap153: tap15 BPF for horizontal peaking filter, only store half of the filter,signed
23:16	RW	-19	reg_sr7_pk_long_bpf_hztap152: tap15 BPF for horizontal peaking filter, only store half of the filter,signed
15:8	RW	31	reg_sr7_pk_long_bpf_hztap151: tap15 BPF for horizontal peaking filter, only store half of the filter,signed
7:0	RW	66	reg_sr7_pk_long_bpf_hztap150: tap15 BPF for horizontal peaking filter, only store half of the filter,signed

Table 10-2274 SRSHARP1_SR7_PKLONGBPF_HTAP1 0x5311

Bit(s)	R/W	Default	Description
31:24	RW	-6	reg_sr7_pk_long_bpf_hztap157: tap15 BPF for horizontal peaking filter, only store half of the filter,signed
23:16	RW	-10	reg_sr7_pk_long_bpf_hztap156: tap15 BPF for horizontal peaking filter, only store half of the filter,signed
15:8	RW	-1	reg_sr7_pk_long_bpf_hztap155: tap15 BPF for horizontal peaking filter, only store half of the filter,signed
7:0	RW	-4	reg_sr7_pk_long_bpf_hztap154: tap15 BPF for horizontal peaking filter, only store half of the filter,signed

Table 10-2275 SRSHARP1_SR7_PKLONGHPF_HTAP0 0x5312

Bit(s)	R/W	Default	Description
31:24	RW	27	reg_sr7_pk_long_hpf_hztap153: tap15 HPF for horizontal peaking filter, only store half of the filter,signed
23:16	RW	-15	reg_sr7_pk_long_hpf_hztap152: tap15 HPF for horizontal peaking filter, only store half of the filter,signed
15:8	RW	-32	reg_sr7_pk_long_hpf_hztap151: tap15 HPF for horizontal peaking filter, only store half of the filter,signed
7:0	RW	58	reg_sr7_pk_long_hpf_hztap150: tap15 HPF for horizontal peaking filter, only store half of the filter,signed

Amlogic Proprietary and Confidential
Copyright © Amlogic. All rights reserved.

Table 10-2276 SRSHARP1_SR7_PKLONGHPF_HTAP1 0x5313

Bit(s)	R/W	Default	Description
31:24	RW	8	reg_sr7_pk_long_hpf_hztap157: tap15 HPF for horizontal peaking filter, only store half of the filter,signed
23:16	RW	-6	reg_sr7_pk_long_hpf_hztap156: tap15 HPF for horizontal peaking filter, only store half of the filter,signed
15:8	RW	-1	reg_sr7_pk_long_hpf_hztap155: tap15 HPF for horizontal peaking filter, only store half of the filter,signed
7:0	RW	-10	reg_sr7_pk_long_hpf_hztap154: tap15 HPF for horizontal peaking filter, only store half of the filter,signed

Table 10-2277 SRSHARP1_SR7_VLTIBPF_TAP0 0x5314

Bit(s)	R/W	Default	Description
31:24	RW	0	reg_sr7_vlti_bpf_tap093: tap09 BPF for vlti (gain3), only store half of the filter, signed
23:16	RW	-41	reg_sr7_vlti_bpf_tap092: tap09 BPF for vlti (gain3), only store half of the filter, signed
15:8	RW	0	reg_sr7_vlti_bpf_tap091: tap09 BPF for vlti (gain3), only store half of the filter, signed
7:0	RW	126	reg_sr7_vlti_bpf_tap090: tap09 BPF for vlti (gain3), only store half of the filter, signed

Table 10-2278 SRSHARP1_SR7_VLTIBPF_TAP1 0x5315

Bit(s)	R/W	Default	Description
31:8			reserved
7:0	RW	-22	reg_sr7_vlti_bpf_tap094: tap09 BPF for vlti (gain3), only store half of the filter, signed

Table 10-2279 SRSHARP1_SR7_VCTIBPF_TAP0 0x5316

Bit(s)	R/W	Default	Description
31:24	RW	0	reg_sr7_vcti_bpf_tap093: tap09 BPF for vcti (gain3), only store half of the filter, signed
23:16	RW	-41	reg_sr7_vcti_bpf_tap092: tap09 BPF for vcti (gain3), only store half of the filter, signed
15:8	RW	0	reg_sr7_vcti_bpf_tap091: tap09 BPF for vcti (gain3), only store half of the filter, signed
7:0	RW	126	reg_sr7_vcti_bpf_tap090: tap09 BPF for vcti (gain3), only store half of the filter, signed

Amlogic Proprietary and Confidential
Copyright © Amlogic. All rights reserved.

Table 10-2280 SRSHARP1_SR7_VCTIBPF_TAP1 0x5317

Bit(s)	R/W	Default	Description
31:8			reserved
7:0	RW	-22	reg_sr7_vcti_bpf_tap094: tap09 BPF for vcti (gain3), only store half of the filter, signed

Table 10-2281 SRSHARP1_SR7_PKLONGBPF_VTAP0 0x5318

Bit(s)	R/W	Default	Description
31:24	RW	-32	reg_sr7_pk_long_bpf_vdtap093: tap09 BPF for vertical and diagonal peaking filter,signed
23:16	RW	-28	reg_sr7_pk_long_bpf_vdtap092: tap09 BPF for vertical and diagonal peaking filter,signed
15:8	RW	30	reg_sr7_pk_long_bpf_vdtap091: tap09 BPF for vertical and diagonal peaking filter,signed
7:0	RW	68	reg_sr7_pk_long_bpf_vdtap090: tap09 BPF for vertical and diagonal peaking filter,signed

Table 10-2282 SRSHARP1_SR7_PKLONGBPF_VTAP1 0x5319

Bit(s)	R/W	Default	Description
31:8			reserved
7:0	RW	-4	reg_sr7_pk_long_bpf_vdtap094: tap09 BPF for vertical and diagonal peaking filter,signed

Table 10-2283 SRSHARP1_SR7_PKLONGHPF_VTAP0 0x531a

Bit(s)	R/W	Default	Description
31:24	RW	30	reg_sr7_pk_long_hpf_vdtap093: tap09 HPF for vertical and diagonal peaking filter,signed
23:16	RW	-28	reg_sr7_pk_long_hpf_vdtap092: tap09 HPF for vertical and diagonal peaking filter,signed
15:8	RW	-31	reg_sr7_pk_long_hpf_vdtap091: tap09 HPF for vertical and diagonal peaking filter,signed
7:0	RW	68	reg_sr7_pk_long_hpf_vdtap090: tap09 HPF for vertical and diagonal peaking filter,signed

Table 10-2284 SRSHARP1_SR7_PKLONGHPF_VTAP1 0x531b

Bit(s)	R/W	Default	Description
31:8			reserved
7:0	RW	-5	reg_sr7_pk_long_hpf_vdtap094: tap09 HPF for vertical and diagonal peaking filter,signed

Amlogic Proprietary and Confidential
Copyright © Amlogic. All rights reserved.

Table 10-2285 SRSHARP1_SR7_CIRBPLONG_ALP 0x531c

Bit(s)	R/W	Default	Description
31:16			reserved
15:12	RW	15	reg_sr7_cirbp_long_alpha3: alpha to blend bp_long to the cirpk filter corresponding angle (0/45/90/135)
11:8	RW	15	reg_sr7_cirbp_long_alpha2: alpha to blend bp_long to the cirpk filter corresponding angle (0/45/90/135)
7:4	RW	15	reg_sr7_cirbp_long_alpha1: alpha to blend bp_long to the cirpk filter corresponding angle (0/45/90/135)
3:0	RW	15	reg_sr7_cirbp_long_alpha0: alpha to blend bp_long to the cirpk filter corresponding angle (0/45/90/135)

Table 10-2286 SRSHARP1_SR7_CIRHPLONG_ALP 0x531d

Bit(s)	R/W	Default	Description
31:16			reserved
15:12	RW	15	reg_sr7_cirhp_long_alpha3: alpha to blend hp_long to the cirpk filter corresponding angle (0/45/90/135)
11:8	RW	15	reg_sr7_cirhp_long_alpha2: alpha to blend hp_long to the cirpk filter corresponding angle (0/45/90/135)
7:4	RW	15	reg_sr7_cirhp_long_alpha1: alpha to blend hp_long to the cirpk filter corresponding angle (0/45/90/135)
3:0	RW	15	reg_sr7_cirhp_long_alpha0: alpha to blend hp_long to the cirpk filter corresponding angle (0/45/90/135)

Table 10-2287 SRSHARP1_SR7_DRTBPLONG_ALP 0x531e

Bit(s)	R/W	Default	Description
31:28	RW	15	reg_sr7_drtbp_long_alpha7: alpha to blend bp_long to the cirpk filter corresponding angle (0/45/90/135)
27:24	RW	15	reg_sr7_drtbp_long_alpha6: alpha to blend bp_long to the cirpk filter corresponding angle (0/45/90/135)
23:20	RW	15	reg_sr7_drtbp_long_alpha5: alpha to blend bp_long to the cirpk filter corresponding angle (0/45/90/135)
19:16	RW	15	reg_sr7_drtbp_long_alpha4: alpha to blend bp_long to the cirpk filter corresponding angle (0/45/90/135)
15:12	RW	15	reg_sr7_drtbp_long_alpha3: alpha to blend bp_long to the drtpk filter corresponding angle (0/45/90/135)
11:8	RW	15	reg_sr7_drtbp_long_alpha2: alpha to blend bp_long to the drtpk filter corresponding angle (0/45/90/135)
7:4	RW	15	reg_sr7_drtbp_long_alpha1: alpha to blend bp_long to the drtpk filter corresponding angle (0/45/90/135)
3:0	RW	15	reg_sr7_drtbp_long_alpha0: alpha to blend bp_long to the drtpk filter corresponding angle (0/45/90/135)

Amlogic Proprietary and Confidential
Copyright © Amlogic. All rights reserved.

Table 10-2288 SRSHARP1_SR7_DRTHPLONG_ALP 0x531f

Bit(s)	R/W	Default	Description
31:28	RW	15	reg_sr7_drthp_long_alpha7: alpha to blend bp_long to the cirpk filter corresponding angle (0/45/90/135)
27:24	RW	15	reg_sr7_drthp_long_alpha6: alpha to blend bp_long to the cirpk filter corresponding angle (0/45/90/135)
23:20	RW	15	reg_sr7_drthp_long_alpha5: alpha to blend bp_long to the cirpk filter corresponding angle (0/45/90/135)
19:16	RW	15	reg_sr7_drthp_long_alpha4: alpha to blend bp_long to the cirpk filter corresponding angle (0/45/90/135)
15:12	RW	15	reg_sr7_drthp_long_alpha3: alpha to blend hp_long to the drtpk filter corresponding angle (0/45/90/135)
11:8	RW	15	reg_sr7_drthp_long_alpha2: alpha to blend hp_long to the drtpk filter corresponding angle (0/45/90/135)
7:4	RW	15	reg_sr7_drthp_long_alpha1: alpha to blend hp_long to the drtpk filter corresponding angle (0/45/90/135)
3:0	RW	15	reg_sr7_drthp_long_alpha0: alpha to blend hp_long to the drtpk filter corresponding angle (0/45/90/135)

Table 10-2289 SRSHARP1_SR7_PKMINMAXCIR_BLD_LUT2D0 0x5320

Bit(s)	R/W	Default	Description
31:28	RW	0	reg_sr7_pk_mimaxerr2_cirbld_lut2d7
27:24	RW	0	reg_sr7_pk_mimaxerr2_cirbld_lut2d6
23:20	RW	2	reg_sr7_pk_mimaxerr2_cirbld_lut2d5
19:16	RW	2	reg_sr7_pk_mimaxerr2_cirbld_lut2d4
15:12	RW	4	reg_sr7_pk_mimaxerr2_cirbld_lut2d3
11:8	RW	6	reg_sr7_pk_mimaxerr2_cirbld_lut2d2
7:4	RW	12	reg_sr7_pk_mimaxerr2_cirbld_lut2d1
3:0	RW	15	reg_sr7_pk_mimaxerr2_cirbld_lut2d0: 2D-LUT for alpha2 for cir-PK blender,larger coef means less drt-pk, x-min_err, y-max_err

Table 10-2290 SRSHARP1_SR7_PKMINMAXCIR_BLD_LUT2D1 0x5321

Bit(s)	R/W	Default	Description
31:28	RW	15	reg_sr7_pk_mimaxerr2_cirbld_lut2d15
27:24	RW	0	reg_sr7_pk_mimaxerr2_cirbld_lut2d14
23:20	RW	2	reg_sr7_pk_mimaxerr2_cirbld_lut2d13
19:16	RW	2	reg_sr7_pk_mimaxerr2_cirbld_lut2d12
15:12	RW	4	reg_sr7_pk_mimaxerr2_cirbld_lut2d11
11:8	RW	6	reg_sr7_pk_mimaxerr2_cirbld_lut2d10

Amlogic Proprietary and Confidential
Copyright © Amlogic. All rights reserved.

Bit(s)	R/W	Default	Description
7:4	RW	15	reg_sr7_pk_mimaxerr2_cirbld_lut2d9
3:0	RW	15	reg_sr7_pk_mimaxerr2_cirbld_lut2d8

Table 10-2291 SRSHARP1_SR7_PKMINMAXCIR_BLD_LUT2D2 0x5322

Bit(s)	R/W	Default	Description
31:28	RW	6	reg_sr7_pk_mimaxerr2_cirbld_lut2d23
27:24	RW	10	reg_sr7_pk_mimaxerr2_cirbld_lut2d22
23:20	RW	15	reg_sr7_pk_mimaxerr2_cirbld_lut2d21
19:16	RW	2	reg_sr7_pk_mimaxerr2_cirbld_lut2d20
15:12	RW	2	reg_sr7_pk_mimaxerr2_cirbld_lut2d19
11:8	RW	4	reg_sr7_pk_mimaxerr2_cirbld_lut2d18
7:4	RW	6	reg_sr7_pk_mimaxerr2_cirbld_lut2d17
3:0	RW	12	reg_sr7_pk_mimaxerr2_cirbld_lut2d16

Table 10-2292 SRSHARP1_SR7_PKMINMAXCIR_BLD_LUT2D3 0x5323

Bit(s)	R/W	Default	Description
31:28	RW	14	reg_sr7_pk_mimaxerr2_cirbld_lut2d31
27:24	RW	15	reg_sr7_pk_mimaxerr2_cirbld_lut2d30
23:20	RW	4	reg_sr7_pk_mimaxerr2_cirbld_lut2d29
19:16	RW	8	reg_sr7_pk_mimaxerr2_cirbld_lut2d28
15:12	RW	10	reg_sr7_pk_mimaxerr2_cirbld_lut2d27
11:8	RW	15	reg_sr7_pk_mimaxerr2_cirbld_lut2d26
7:4	RW	2	reg_sr7_pk_mimaxerr2_cirbld_lut2d25
3:0	RW	4	reg_sr7_pk_mimaxerr2_cirbld_lut2d24

Table 10-2293 SRSHARP1_SR7_PKMINMAXCIR_BLD_LUT2D4 0x5324

Bit(s)	R/W	Default	Description
31:16			reserved
15:12	RW	15	reg_sr7_pk_mimaxerr2_cirbld_lut2d35
11:8	RW	15	reg_sr7_pk_mimaxerr2_cirbld_lut2d34
7:4	RW	15	reg_sr7_pk_mimaxerr2_cirbld_lut2d33
3:0	RW	12	reg_sr7_pk_mimaxerr2_cirbld_lut2d32

Amlogic Proprietary and Confidential
Copyright © Amlogic. All rights reserved.

Table 10-2294 SRSHARP1_SR7_PKMINMAXLPF_BLD_LUT2D0 0x5325

Bit(s)	R/W	Default	Description
31:28	RW	0	reg_sr7_pk_mimaxerr2_lpfbld_lut2d7
27:24	RW	0	reg_sr7_pk_mimaxerr2_lpfbld_lut2d6
23:20	RW	2	reg_sr7_pk_mimaxerr2_lpfbld_lut2d5
19:16	RW	2	reg_sr7_pk_mimaxerr2_lpfbld_lut2d4
15:12	RW	4	reg_sr7_pk_mimaxerr2_lpfbld_lut2d3
11:8	RW	6	reg_sr7_pk_mimaxerr2_lpfbld_lut2d2
7:4	RW	12	reg_sr7_pk_mimaxerr2_lpfbld_lut2d1
3:0	RW	15	reg_sr7_pk_mimaxerr2_lpfbld_lut2d0: 2D-LUT for alpha2 for PK lpf along edge blender, lareger coef means less lpf along edge,x-min_err, y-max_err

Table 10-2295 SRSHARP1_SR7_PKMINMAXLPF_BLD_LUT2D1 0x5326

Bit(s)	R/W	Default	Description
31:28	RW	15	reg_sr7_pk_mimaxerr2_lpfbld_lut2d15
27:24	RW	0	reg_sr7_pk_mimaxerr2_lpfbld_lut2d14
23:20	RW	2	reg_sr7_pk_mimaxerr2_lpfbld_lut2d13
19:16	RW	2	reg_sr7_pk_mimaxerr2_lpfbld_lut2d12
15:12	RW	4	reg_sr7_pk_mimaxerr2_lpfbld_lut2d11
11:8	RW	6	reg_sr7_pk_mimaxerr2_lpfbld_lut2d10
7:4	RW	15	reg_sr7_pk_mimaxerr2_lpfbld_lut2d9
3:0	RW	15	reg_sr7_pk_mimaxerr2_lpfbld_lut2d8

Table 10-2296 SRSHARP1_SR7_PKMINMAXLPF_BLD_LUT2D2 0x5327

Bit(s)	R/W	Default	Description
31:28	RW	6	reg_sr7_pk_mimaxerr2_lpfbld_lut2d23
27:24	RW	10	reg_sr7_pk_mimaxerr2_lpfbld_lut2d22
23:20	RW	15	reg_sr7_pk_mimaxerr2_lpfbld_lut2d21
19:16	RW	2	reg_sr7_pk_mimaxerr2_lpfbld_lut2d20
15:12	RW	2	reg_sr7_pk_mimaxerr2_lpfbld_lut2d19
11:8	RW	4	reg_sr7_pk_mimaxerr2_lpfbld_lut2d18
7:4	RW	6	reg_sr7_pk_mimaxerr2_lpfbld_lut2d17
3:0	RW	12	reg_sr7_pk_mimaxerr2_lpfbld_lut2d16

Amlogic Proprietary and Confidential
Copyright © Amlogic. All rights reserved.

Table 10-2297 SRSHARP1_SR7_PKMINMAXLPF_BLD_LUT2D3 0x5328

Bit(s)	R/W	Default	Description
31:28	RW	14	reg_sr7_pk_mimaxerr2_lpfbld_lut2d31
27:24	RW	15	reg_sr7_pk_mimaxerr2_lpfbld_lut2d30
23:20	RW	4	reg_sr7_pk_mimaxerr2_lpfbld_lut2d29
19:16	RW	8	reg_sr7_pk_mimaxerr2_lpfbld_lut2d28
15:12	RW	10	reg_sr7_pk_mimaxerr2_lpfbld_lut2d27
11:8	RW	15	reg_sr7_pk_mimaxerr2_lpfbld_lut2d26
7:4	RW	2	reg_sr7_pk_mimaxerr2_lpfbld_lut2d25
3:0	RW	4	reg_sr7_pk_mimaxerr2_lpfbld_lut2d24

Table 10-2298 SRSHARP1_SR7_PKMINMAXLPF_BLD_LUT2D4 0x5329

Bit(s)	R/W	Default	Description
31:16			reserved
15:12	RW	15	reg_sr7_pk_mimaxerr2_lpfbld_lut2d35
11:8	RW	15	reg_sr7_pk_mimaxerr2_lpfbld_lut2d34
7:4	RW	15	reg_sr7_pk_mimaxerr2_lpfbld_lut2d33
3:0	RW	12	reg_sr7_pk_mimaxerr2_lpfbld_lut2d32

Table 10-2299 SRSHARP1_SR7_PKDRT_BLD_EN 0x532a

Bit(s)	R/W	Default	Description
31:1			reserved
0	RW	0	reg_sr7_pkdrtbld_beta_en: enable of direction ambiguity protection for drt and cir blend

Table 10-2300 SRSHARP1_SR7_DRTDIF_TH 0x532b

Bit(s)	R/W	Default	Description
31:16			reserved
15::8	RW	128	reg_sr7_drtdif_min2sad_th1
7:0	RW	128	reg_sr7_drtdif_min2sad_th0:for min2_sad threshold for ambiguilty ignoring

Table 10-2301 SRSHARP1_SR7_TIBLD_PRT 0x532c

Bit(s)	R/W	Default	Description
31:16			reserved
13	RW	1	reg_sr7_hlti_dcbld_beta_en:enable of denoise protection for dc org and denoise blend
12	RW	1	reg_sr7_vlti_dcbld_beta_en:enable of denoise protection for dc org and denoise blend

Amlogic Proprietary and Confidential
Copyright © Amlogic. All rights reserved.

Bit(s)	R/W	Default	Description
11:8	RW	0	reg_sr7_xcti_dcbld_beta1:beta for denoise and org dc blend base on the x=cal_ drt_dif4(min_idx,min2_idx)
7:4	RW	15	reg_sr7_xcti_dcbld_beta0:beta for denoise and org dc blend base on the x=cal_ drt_dif4(min_idx,min2_idx)
3	RW	1	reg_sr7_hcti_dcbld_beta_en:enable of denoise protection for dc org and denoise blend
2	RW	1	reg_sr7_vcti_dcbld_beta_en:enable of denoise protection for dc org and denoise blend
1	RW	0	reg_sr7_hcti_dcbld_use_ybeta:enable to use beta from hlti
0	RW	0	reg_sr7_vcti_dcbld_use_ybeta:enable to use beta from vlti

Table 10-2302 SRSHARP1_SR7_HTI_OPT_FORCE 0x532d

Bit(s)	R/W	Default	Description
31:6			reserved
7:6	RW	1	reg_sr7_diag_force_hti1force hti: for diagonal edges luma/chroma, 0: bypass, 1: diagonal use vti, 2:diagonal use hti
5:4	RW	1	reg_sr7_diag_force_hti0:force hti for diagonal edges luma/chroma, 0: bypass, 1: diagonal use vti, 2:diagonal use hti
3	RW	1	reg_sr7_horz_force_vti1:force vti for horizontal edges luma/chroma, 0: bias hti, 1: horizontal edge force 100% vti
2	RW	1	reg_sr7_horz_force_vti0:force vti for horizontal edges luma/chroma, 0: bias hti, 1: horizontal edge force 100% vti
1	RW	1	reg_sr7_alph_force_hvsad1:alpha = minsad*64/maxsad, force minsad=sad_h, maxsad=sad_v for alpha calculation
0	RW	1	reg_sr7_alph_force_hvsad0:alpha = minsad*64/maxsad, force minsad=sad_h, maxsad=sad_v for alpha calculation,[0]for luma, [1] for chroma

Table 10-2303 SRSHARP1_SR7_HVTI_FINALGAIN 0x532e

Bit(s)	R/W	Default	Description
31:28			reserved
27:16	RW	256	reg_sr7_hvti_finalgain1: final gain for HVTI boost, for easier level tunning for application
15:12			reserved
11:0	RW	256	reg_sr7_hvti_finalgain0: final gain for HVTI boost, for easier level tunning for application

Table 10-2304 SRSHARP1_SR7_TIOS_SDRATIO 0x532f

Bit(s)	R/W	Default	Description
31:30			reserved
29:24	RW	3	reg_sr7_hti_osmargin_sdratio1:ratio for HTI OS margin adaptive to sd
23:22			reserved

Amlogic Proprietary and Confidential
Copyright © Amlogic. All rights reserved.

Bit(s)	R/W	Default	Description
21:16	RW	3	reg_sr7_hti_osmargin_sdratio0:ratio for HTI OS margin adaptive to sd
15:14			reserved
13:8	RW	3	reg_sr7_vti_osmargin_sdratio1:ratio for VTI OS margin adaptive to sd
7:6			reserved
5:0	RW	3	reg_sr7_vti_osmargin_sdratio0:ratio for VTI OS margin adaptive to sd

Table 10-2305 SRSHARP1_SR7_XTI_SDFDEN 0x5330

Bit(s)	R/W	Default	Description
31:1			reserved
1	RW	1	reg_sr7_xtigain_sdfd_en1: adaptive gamma for cti boost gain enable.
0	RW	1	reg_sr7_xtigain_sdfd_en0: adaptive gamma for cti boost gain enable.[0]for luma, [1] for chroma

Table 10-2306 SRSHARP1_SR7_FDSD_PARAM 0x5331

Bit(s)	R/W	Default	Description
31:26			reserved
25	RW	1	reg_fdsd_vlpf_en:use vertical [1 2 1] lpf filter for the fd and sd derivativecalculations
24	RW	1	reg_fdsd_hlpf_en:use horizontal [1 2 1] lpf filter for the fd and sd derivativecalculations
23:20	RW	0	reg_sd_coring_th1:coring to SD'= MAX(SD - FD*ratio - coring,0)
19:16	RW	0	reg_sd_coring_th0:coring to SD'= MAX(SD - FD*ratio - coring,0)
15:14			reserved
13:8	RW	4	reg_sd_coring_ratio2fd1:ratio to FD for adaptive coring to SD'= MAX(SD - FD*ratio - coring,0)
7:6			reserved
5:0	RW	4	reg_sd_coring_ratio2fd0:ratio to FD for adaptive coring to SD'= MAX(SD - FD*ratio - coring,0)

Table 10-2307 SRSHARP1_SR7_TI_BPF_EN 0x5332

Bit(s)	R/W	Default	Description
31:4			reserved
3	RW	1	reg_sr7_hlti_bpf_en:enable of tap09 BPF for hlti (gain3), only store half of the filter
2	RW	1	reg_sr7_hcti_bpf_en:enable of tap09 BPF for hcti (gain3), only store half of the filter
1	RW	1	reg_sr7_vlti_bpf_en:enable of tap09 BPF for vcti (gain3), only store half of the filter
0	RW	1	reg_sr7_vcti_bpf_en:enable of tap09 BPF for vlti (gain3), only store half of the filter

Amlogic Proprietary and Confidential
Copyright © Amlogic. All rights reserved.

Table 10-2308 SRSHARP1_SR7_PKLONG_PF_EN 0x5333

Bit(s)	R/W	Default	Description
31:2			reserved
1	RW	1	reg_sr7_pk_long_bpf_en:enable of long BPF for peaking
0	RW	1	reg_sr7_pk_long_hpf_en:enable of long HPF for peaking

Table 10-2309 SRSHARP1_SR7_PKLONG_PF_GAIN 0x5334

Bit(s)	R/W	Default	Description
31:24	RW	64	reg_sr7_pk_long_bpf_hzgain:gain to long horizontal BPF for peaking
23:16	RW	64	reg_sr7_pk_long_bpf_vdgain:gain to long vertical and diagonal BPF for peaking
15:8	RW	64	reg_sr7_pk_long_hpf_hzgain:gain to long horizontal HPF for peaking
7:0	RW	64	reg_sr7_pk_long_hpf_vdgain:gain to long vertical and diagonal HPF for peaking

Table 10-2310 SRSHARP1_SR7_PKMINMAX_BLD 0x5335

Bit(s)	R/W	Default	Description
31:4			reserved
3	RW	1	reg_sr7_pk_mimaxerr2_cirbld_on_bp:enable to use adaptive blender of drtBP vs cirBP alpha2, the larger of cell, the more cirPK results, 0: alp2=lut2d(minerr, maxerr),1:alp2=min_err/maxerr
2	RW	1	reg_sr7_pk_mimaxerr2_cirbld_on_hp:enable to use adaptive blender of drtHP vs cirHP alpha2, the larger of cell, the more cirPK results, 0: alp2=lut2d(minerr, maxerr),1:alp2=min_err/maxerr
1	RW	1	reg_sr7_pk_mimaxerr2_lpfbld_on_bp:enable to use adaptive blender of BP result lpf along edge based on the mimaxsad relationship
0	RW	1	reg_sr7_pk_mimaxerr2_lpfbld_on_hp:enable to use adaptive blender of HP result lpf along edge based on the mimaxsad relationship

Table 10-2311 SRSHARP1_SR7_TI_CONMAXERR_GAIN 0x5336

Bit(s)	R/W	Default	Description
31:16			reserved
15:12	RW	8	reg_sr7_hti_conmaxerr_gain1:con=max(con, maxerr) for the horizontal transition calculation, gain=0, same as s6 and prev, [0] for y and [1] for uv
11:8	RW	8	reg_sr7_hti_conmaxerr_gain0:con=max(con, maxerr) for the horizontal transition calculation, gain=0, same as s6 and prev, [0] for y and [1] for uv
7:4	RW	8	reg_sr7_vti_conmaxerr_gain1:con=max(con, maxerr) for the vertical transition calculation, gain=0, same as s6 and prev, [0] for y and [1] for uv
3:0	RW	8	reg_sr7_vti_conmaxerr_gain0:con=max(con, maxerr) for the vertical transition calculation, gain=0, same as s6 and prev, [0] for y and [1] for uv

Amlogic Proprietary and Confidential
Copyright © Amlogic. All rights reserved.

Table 10-2312 SRSHARP1_SR7_CC_PK_ADJ 0x5337

Bit(s)	R/W	Default	Description
31:25			reserved
24	RW	1	reg_sr7_cc_enable:color compensation enable, 0: no CC, 1: with CC
23:22			reserved
21:20	RW	0	reg_sr7_cc_yinp_sel:color compensation input luma selection, 0: org_y; 1: gau_y ; 2:gauadp_y; 3:edgeadp_y (same as dnlp input sel)
19:18	RW	2	reg_sr7_cc_ydlt_sel:color compensation output luma selection, 0: peaking+lti output; 1: dnlp output; 2/3: peaking+lti+dnlp
17:16	RW	1	reg_sr7_cc_sat_norm:normalization of lut cell to saturation. 0: norm to 8 as 1.0, sat[0:23/8]; 1: norm to 16 as 1.0, sat[1/16:31/16]; 2: norm to 32 as 1.0, sat[17/32:47/32]; 3:norm to 64 as 1.0, sat[49/64:79/64]
15:8	RW	64	reg_sr7_cc_ydlt_pscl:prescale to the y-delta (if >0) before feeding to y-lumadlt, normalized 64 as 1.0
7:0	RW	64	reg_sr7_cc_ydlt_nscl:prescale to the y-delta (if <0) before feeding to y-lumadlt, normalized 64 as 1.0

Table 10-2313 SRSHARP1_SR7_CC_LUT0 0x5338

Bit(s)	R/W	Default	Description
31:28	RW	0	reg_sr7_cc_lut003:valid for y-lumadlt= 1/4, 1/2, 3/4, 1.0; of x-lumainput=0
27:24	RW	0	reg_sr7_cc_lut002:valid for y-lumadlt= 1/4, 1/2, 3/4, 1.0; of x-lumainput=0
23:20	RW	0	reg_sr7_cc_lut001:valid for y-lumadlt= 1/4, 1/2, 3/4, 1.0; of x-lumainput=0
19:16	RW	0	reg_sr7_cc_lut000:valid for y-lumadlt= 1/4, 1/2, 3/4, 1.0; of x-lumainput=0
15:12	RW	8	reg_sr7_cc_lut103:valid for y-lumadlt= 1/4, 1/2, 3/4, 1.0; of x-lumainput=1/8
11:8	RW	4	reg_sr7_cc_lut102:valid for y-lumadlt= 1/4, 1/2, 3/4, 1.0; of x-lumainput=1/8
7:4	RW	2	reg_sr7_cc_lut101:valid for y-lumadlt= 1/4, 1/2, 3/4, 1.0; of x-lumainput=1/8
3:0	RW	1	reg_sr7_cc_lut100:valid for y-lumadlt= 1/4, 1/2, 3/4, 1.0; of x-lumainput=1/8

Table 10-2314 SRSHARP1_SR7_CC_LUT1 0x5339

Bit(s)	R/W	Default	Description
31:28			reserved
27:24	RW	12	reg_sr7_cc_lut202:valid for y-lumadlt= 1/4, 1/2, 3/4; of x-lumainput=2/8
23:20	RW	8	reg_sr7_cc_lut201:valid for y-lumadlt= 1/4, 1/2, 3/4; of x-lumainput=2/8
19:16	RW	4	reg_sr7_cc_lut200:valid for y-lumadlt= 1/4, 1/2, 3/4; of x-lumainput=2/8
15:12			reserved
11:8	RW	15	reg_sr7_cc_lut302:valid for y-lumadlt= 1/4, 1/2, 3/4; of x-lumainput=3/8
7:4	RW	10	reg_sr7_cc_lut301:valid for y-lumadlt= 1/4, 1/2, 3/4; of x-lumainput=3/8
3:0	RW	5	reg_sr7_cc_lut300:valid for y-lumadlt= 1/4, 1/2, 3/4; of x-lumainput=3/8

Amlogic Proprietary and Confidential
Copyright © Amlogic. All rights reserved.

Table 10-2315 SRSHARP1_SR7_CC_LUT2 0x533a

Bit(s)	R/W	Default	Description
31:24			reserved
23:20	RW	15	reg_sr7_cc_lut401:valid for y-lumadlt= 1/4, 1/2 ; of x-lumainput=4/8
19:16	RW	8	reg_sr7_cc_lut400:valid for y-lumadlt= 1/4, 1/2; of x-lumainput=4/8
15:12	RW	13	reg_sr7_cc_lut501:valid for y-lumadlt= 1/4, 1/2; of x-lumainput=5/8
11:8	RW	6	reg_sr7_cc_lut500:valid for y-lumadlt= 1/4, 1/2; of x-lumainput=5/8
7:4	RW	5	reg_sr7_cc_lut600:valid for y-lumadlt= 1/4 of x-lumainput=6/8
3:0	RW	4	reg_sr7_cc_lut700:valid for y-lumadlt= 1/4 of x-lumainput=7/8

Table 10-2316 SRSHARP1_SR7_CC_LUT3 0x533b

Bit(s)	R/W	Default	Description
31:24			reserved
23:20	RW	4	reg_sr7_cc_lut710:valid for y-lumadlt= -1/4,; of x-lumainput=1/8
19:16	RW	5	reg_sr7_cc_lut610:valid for y-lumadlt= -1/4,; of x-lumainput=2/8
15:12	RW	13	reg_sr7_cc_lut511:valid for y-lumadlt= -1/4, -1/2; of x-lumainput=3/8
11:8	RW	6	reg_sr7_cc_lut510:valid for y-lumadlt= -1/4, -1/2; of x-lumainput=3/8
7:4	RW	15	reg_sr7_cc_lut411:valid for y-lumadlt= -1/4, -1/2 of x-lumainput=4/8
3:0	RW	8	reg_sr7_cc_lut410:valid for y-lumadlt= -1/4 , -1/2 of x-lumainput=4/8

Table 10-2317 SRSHARP1_SR7_CC_LUT4 0x533c

Bit(s)	R/W	Default	Description
31:24			reserved
23:20	RW	15	reg_sr7_cc_lut312:valid for y-lumadlt= -1/4,-1/2, -3/4; of x-lumainput=5/8
19:16	RW	10	reg_sr7_cc_lut311:valid for y-lumadlt= -1/4,-1/2, -3/4; of x-lumainput=5/8
15:12	RW	5	reg_sr7_cc_lut310:valid for y-lumadlt= -1/4,-1/2, -3/4; of x-lumainput=5/8
11:8	RW	12	reg_sr7_cc_lut212:valid for y-lumadlt= -1/4, -1/2, -3/4;; of x-lumainput=6/8
7:4	RW	8	reg_sr7_cc_lut211:valid for y-lumadlt= -1/4, -1/2, -3/4; of x-lumainput=6/8
3:0	RW	4	reg_sr7_cc_lut210:valid for y-lumadlt= -1/4, -1/2, -3/4; of x-lumainput=6/8

Table 10-2318 SRSHARP1_SR7_CC_LUT5 0x533d

Bit(s)	R/W	Default	Description
31:28	RW	8	reg_sr7_cc_lut113:valid for y-lumadlt= -1/4, -1/2, -3/4, -1.0; of x-lumainput=7/8
27:24	RW	4	reg_sr7_cc_lut112:valid for y-lumadlt= -1/4, -1/2, -3/4, -1.0; of x-lumainput=7/8
23:20	RW	2	reg_sr7_cc_lut111:valid for y-lumadlt= -1/4, -1/2, -3/4, -1.0; of x-lumainput=7/8
19:16	RW	1	reg_sr7_cc_lut110:valid for y-lumadlt= -1/4, -1/2, -3/4, -1.0; of x-lumainput=7/8

Amlogic Proprietary and Confidential
Copyright © Amlogic. All rights reserved.

Bit(s)	R/W	Default	Description
15:12	RW	0	reg_sr7_cc_lut013:valid for y-lumadlt= -1/4, -1/2, -3/4, -1.0; of x-lumainput=8/8
11:8	RW	0	reg_sr7_cc_lut012:valid for y-lumadlt= -1/4, -1/2, -3/4, -1.0; of x-lumainput=8/8
7:4	RW	0	reg_sr7_cc_lut011:valid for y-lumadlt= -1/4, -1/2, -3/4, -1.0; of x-lumainput=8/8
3:0	RW	0	reg_sr7_cc_lut010:valid for y-lumadlt= -1/4, -1/2, -3/4, -1.0; of x-lumainput=8/8

Table 10-2319 SRSHARP1_SR7_GRAPHIC_CTRL 0x533e

Bit(s)	R/W	Default	Description
31:11			reserved
10	RW	1	reg_sr7_grph_en:enable graphic statistic
9	RW	1	reg_sr7_grph_hflt:horizontal filter, 0: [0 1 -1], 1: [-1 2 -1]
8	RW	1	reg_sr7_grph_vflt: vertical filter, 0: [0 1 -1], 1: [-1 2 -1]
7:0	RW	0	reg_sr7_grph_dif_cor:coring for dif while count for graphic

Table 10-2320 SRSHARP1_SR7_GRAPHIC_THD_GAIN 0x533f

Bit(s)	R/W	Default	Description
31:24	RW	2	reg_sr7_grph_flt_thd: flat threshold for dif while count for graphic.
23:16	RW	40	reg_sr7_grph_dtl_thd:detail threshold for dif while count for graphic
15:8	RW	32	reg_sr7_grph_hgain:horizontal gain for fast squart of hp
7:0	RW	32	reg_sr7_grph_vgain:vertical gain for fast squart of hp

Table 10-2321 SRSHARP1_SR7_RO_GRAPHIC_FLT_CNT 0x5340

Bit(s)	R/W	Default	Description
31:0	RO	0	ro_sr7_grph_flt_cnt:: flat count numbers for graphic

Table 10-2322 SRSHARP1_SR7_RO_GRAPHIC_DTL_CNT 0x5341+

Bit(s)	R/W	Default	Description
31:0	RO	0	ro_sr7_grph_dtl_cnt::detail count numbers for graphic

Table 10-2323 SRSHARP1_SR7_CLR_PRT_PARAM 0x5342

Bit(s)	R/W	Default	Description
31:18			reserved
17:16	RW	3	reg_sr7_clr_prct_inpsel:input UV selection for color protection, 0: org; 1: NRout; 2: CTIout; 3: (NR+TIout)/2

Amlogic Proprietary and Confidential
Copyright © Amlogic. All rights reserved.

Bit(s)	R/W	Default	Description
15:8	RW	64	reg_sr7_clr_prct_dnlp_gain:gain to de-boost of dnlp_dlt base on color region, norm to 64 as 1.0. set to 0 as disable.
7:0	RW	64	reg_sr7_clr_prct_peak_gain:gain to de-boost of peak_dlt base on color region, norm to 64 as 1.0, set to 0 as disable

Table 10-2324 SRSHARP1_SR7_CLR_PRT_LC_GAIN 0x5343

Bit(s)	R/W	Default	Description
31:24			reserved
23:16	RW	64	reg_sr7_clr_prct_lc_gain2:gain to de-boost of lc_dlt (y/u/v) base on color region, norm to 64 as 1.0, set to 0 as disable
15:8	RW	64	reg_sr7_clr_prct_lc_gain1:gain to de-boost of lc_dlt (y/u/v) base on color region, norm to 64 as 1.0, set to 0 as disable
7:0	RW	64	reg_sr7_clr_prct_lc_gain0:gain to de-boost of lc_dlt (y/u/v) base on color region, norm to 64 as 1.0, set to 0 as disable

Table 10-2325 SRSHARP1_SR7_CLR_PRT_LUT0 0x5344

Bit(s)	R/W	Default	Description
31:28	RW	0	reg_sr7_clr_prct_lut7:color protection lut, 16 is normalized to 1
27:24	RW	0	reg_sr7_clr_prct_lut6:color protection lut, 16 is normalized to 1
23:20	RW	0	reg_sr7_clr_prct_lut5:color protection lut, 16 is normalized to 1
19:16	RW	0	reg_sr7_clr_prct_lut4:color protection lut, 16 is normalized to 1
15:12	RW	0	reg_sr7_clr_prct_lut3:color protection lut, 16 is normalized to 1
11:8	RW	0	reg_sr7_clr_prct_lut2:color protection lut, 16 is normalized to 1
7:4	RW	0	reg_sr7_clr_prct_lut1:color protection lut, 16 is normalized to 1
3:0	RW	0	reg_sr7_clr_prct_lut0:color protection lut, 16 is normalized to 1

Table 10-2326 SRSHARP1_SR7_CLR_PRT_LUT1 0x5345

Bit(s)	R/W	Default	Description
31:28	RW	0	reg_sr7_clr_prct_lut15:color protection lut, 16 is normalized to 1
27:24	RW	0	reg_sr7_clr_prct_lut14:color protection lut, 16 is normalized to 1
23:20	RW	0	reg_sr7_clr_prct_lut13:color protection lut, 16 is normalized to 1
19:16	RW	0	reg_sr7_clr_prct_lut12:color protection lut, 16 is normalized to 1
15:12	RW	0	reg_sr7_clr_prct_lut11:color protection lut, 16 is normalized to 1
11:8	RW	0	reg_sr7_clr_prct_lut10:color protection lut, 16 is normalized to 1
7:4	RW	0	reg_sr7_clr_prct_lut9:color protection lut, 16 is normalized to 1
3:0	RW	0	reg_sr7_clr_prct_lut8:color protection lut, 16 is normalized to 1

Amlogic Proprietary and Confidential
Copyright © Amlogic. All rights reserved.

Table 10-2327 SRSHARP1_SR7_CLR_PRT_LUT2 0x5346

Bit(s)	R/W	Default	Description
31:28	RW	0	reg_sr7_clr_prct_lut23:color protection lut, 16 is normalized to 1
27:24	RW	0	reg_sr7_clr_prct_lut22:color protection lut, 16 is normalized to 1
23:20	RW	0	reg_sr7_clr_prct_lut21:color protection lut, 16 is normalized to 1
19:16	RW	0	reg_sr7_clr_prct_lut20:color protection lut, 16 is normalized to 1
15:12	RW	0	reg_sr7_clr_prct_lut19:color protection lut, 16 is normalized to 1
11:8	RW	0	reg_sr7_clr_prct_lut18:color protection lut, 16 is normalized to 1
7:4	RW	0	reg_sr7_clr_prct_lut17:color protection lut, 16 is normalized to 1
3:0	RW	0	reg_sr7_clr_prct_lut16:color protection lut, 16 is normalized to 1

Table 10-2328 SRSHARP1_SR7_CLR_PRT_LUT3 0x5347

Bit(s)	R/W	Default	Description
31:28	RW	0	reg_sr7_clr_prct_lut31:color protection lut, 16 is normalized to 1
27:24	RW	0	reg_sr7_clr_prct_lut30:color protection lut, 16 is normalized to 1
23:20	RW	0	reg_sr7_clr_prct_lut29:color protection lut, 16 is normalized to 1
19:16	RW	0	reg_sr7_clr_prct_lut28:color protection lut, 16 is normalized to 1
15:12	RW	0	reg_sr7_clr_prct_lut27:color protection lut, 16 is normalized to 1
11:8	RW	0	reg_sr7_clr_prct_lut26:color protection lut, 16 is normalized to 1
7:4	RW	0	reg_sr7_clr_prct_lut25:color protection lut, 16 is normalized to 1
3:0	RW	0	reg_sr7_clr_prct_lut24:color protection lut, 16 is normalized to 1

Table 10-2329 SRSHARP1_SR7_CLR_PRT_LUT4 0x5348

Bit(s)	R/W	Default	Description
31:28	RW	0	reg_sr7_clr_prct_lut39:color protection lut, 16 is normalized to 1
27:24	RW	0	reg_sr7_clr_prct_lut38:color protection lut, 16 is normalized to 1
23:20	RW	0	reg_sr7_clr_prct_lut37:color protection lut, 16 is normalized to 1
19:16	RW	0	reg_sr7_clr_prct_lut36:color protection lut, 16 is normalized to 1
15:12	RW	0	reg_sr7_clr_prct_lut35:color protection lut, 16 is normalized to 1
11:8	RW	0	reg_sr7_clr_prct_lut34:color protection lut, 16 is normalized to 1
7:4	RW	0	reg_sr7_clr_prct_lut33:color protection lut, 16 is normalized to 1
3:0	RW	0	reg_sr7_clr_prct_lut32:color protection lut, 16 is normalized to 1

Amlogic Proprietary and Confidential
Copyright © Amlogic. All rights reserved.

Table 10-2330 SRSHARP1_SR7_CLR_PRT_LUT5 0x5349

Bit(s)	R/W	Default	Description
31:28	RW	0	reg_sr7_clr_prct_lut47:color protection lut, 16 is normalized to 1
27:24	RW	0	reg_sr7_clr_prct_lut46:color protection lut, 16 is normalized to 1
23:20	RW	0	reg_sr7_clr_prct_lut45:color protection lut, 16 is normalized to 1
19:16	RW	0	reg_sr7_clr_prct_lut44:color protection lut, 16 is normalized to 1
15:12	RW	0	reg_sr7_clr_prct_lut43:color protection lut, 16 is normalized to 1
11:8	RW	0	reg_sr7_clr_prct_lut42:color protection lut, 16 is normalized to 1
7:4	RW	0	reg_sr7_clr_prct_lut41:color protection lut, 16 is normalized to 1
3:0	RW	0	reg_sr7_clr_prct_lut40:color protection lut, 16 is normalized to 1

Table 10-2331 SRSHARP1_SR7_CLR_PRT_LUT6 0x534a

Bit(s)	R/W	Default	Description
31:28	RW	0	reg_sr7_clr_prct_lut55:color protection lut, 16 is normalized to 1
27:24	RW	0	reg_sr7_clr_prct_lut54:color protection lut, 16 is normalized to 1
23:20	RW	0	reg_sr7_clr_prct_lut53:color protection lut, 16 is normalized to 1
19:16	RW	0	reg_sr7_clr_prct_lut52:color protection lut, 16 is normalized to 1
15:12	RW	0	reg_sr7_clr_prct_lut51:color protection lut, 16 is normalized to 1
11:8	RW	0	reg_sr7_clr_prct_lut50:color protection lut, 16 is normalized to 1
7:4	RW	0	reg_sr7_clr_prct_lut49:color protection lut, 16 is normalized to 1
3:0	RW	0	reg_sr7_clr_prct_lut48:color protection lut, 16 is normalized to 1

Table 10-2332 SRSHARP1_SR7_CLR_PRT_LUT7 0x534b

Bit(s)	R/W	Default	Description
31:28	RW	0	reg_sr7_clr_prct_lut63:color protection lut, 16 is normalized to 1
27:24	RW	0	reg_sr7_clr_prct_lut62:color protection lut, 16 is normalized to 1
23:20	RW	0	reg_sr7_clr_prct_lut61:color protection lut, 16 is normalized to 1
19:16	RW	0	reg_sr7_clr_prct_lut60:color protection lut, 16 is normalized to 1
15:12	RW	0	reg_sr7_clr_prct_lut59:color protection lut, 16 is normalized to 1
11:8	RW	0	reg_sr7_clr_prct_lut58:color protection lut, 16 is normalized to 1
7:4	RW	0	reg_sr7_clr_prct_lut57:color protection lut, 16 is normalized to 1
3:0	RW	0	reg_sr7_clr_prct_lut56:color protection lut, 16 is normalized to 1

Amlogic Proprietary and Confidential
Copyright © Amlogic. All rights reserved.

Table 10-2333 SRSHARP1_SR7_CLR_PRT_LUT8 0x534c

Bit(s)	R/W	Default	Description
31:28	RW	0	reg_sr7_clr_prct_lut71:color protection lut, 16 is normalized to 1
27:24	RW	0	reg_sr7_clr_prct_lut70:color protection lut, 16 is normalized to 1
23:20	RW	0	reg_sr7_clr_prct_lut69:color protection lut, 16 is normalized to 1
19:16	RW	0	reg_sr7_clr_prct_lut68:color protection lut, 16 is normalized to 1
15:12	RW	0	reg_sr7_clr_prct_lut67:color protection lut, 16 is normalized to 1
11:8	RW	0	reg_sr7_clr_prct_lut66:color protection lut, 16 is normalized to 1
7:4	RW	0	reg_sr7_clr_prct_lut65:color protection lut, 16 is normalized to 1
3:0	RW	0	reg_sr7_clr_prct_lut64:color protection lut, 16 is normalized to 1

Table 10-2334 SRSHARP1_SR7_CLR_PRT_LUT9 0x534d

Bit(s)	R/W	Default	Description
31:28	RW	0	reg_sr7_clr_prct_lut79:color protection lut, 16 is normalized to 1
27:24	RW	0	reg_sr7_clr_prct_lut78:color protection lut, 16 is normalized to 1
23:20	RW	0	reg_sr7_clr_prct_lut77:color protection lut, 16 is normalized to 1
19:16	RW	0	reg_sr7_clr_prct_lut76:color protection lut, 16 is normalized to 1
15:12	RW	0	reg_sr7_clr_prct_lut75:color protection lut, 16 is normalized to 1
11:8	RW	0	reg_sr7_clr_prct_lut74:color protection lut, 16 is normalized to 1
7:4	RW	0	reg_sr7_clr_prct_lut73:color protection lut, 16 is normalized to 1
3:0	RW	0	reg_sr7_clr_prct_lut72:color protection lut, 16 is normalized to 1

Table 10-2335 SRSHARP1_SR7_CLR_PRT_LUT10 0x534e

Bit(s)	R/W	Default	Description
31:28	RW	0	reg_sr7_clr_prct_lut87:color protection lut, 16 is normalized to 1
27:24	RW	0	reg_sr7_clr_prct_lut86:color protection lut, 16 is normalized to 1
23:20	RW	0	reg_sr7_clr_prct_lut85:color protection lut, 16 is normalized to 1
19:16	RW	0	reg_sr7_clr_prct_lut84:color protection lut, 16 is normalized to 1
15:12	RW	0	reg_sr7_clr_prct_lut83:color protection lut, 16 is normalized to 1
11:8	RW	0	reg_sr7_clr_prct_lut82:color protection lut, 16 is normalized to 1
7:4	RW	0	reg_sr7_clr_prct_lut81:color protection lut, 16 is normalized to 1
3:0	RW	0	reg_sr7_clr_prct_lut80:color protection lut, 16 is normalized to 1

Amlogic Proprietary and Confidential
Copyright © Amlogic. All rights reserved.

Table 10-2336 SRSHARP1_SR7_CLR_PRT_LUT11 0x534f

Bit(s)	R/W	Default	Description
31:28	RW	0	reg_sr7_clr_prct_lut95:color protection lut, 16 is normalized to 1
27:24	RW	0	reg_sr7_clr_prct_lut94:color protection lut, 16 is normalized to 1
23:20	RW	0	reg_sr7_clr_prct_lut93:color protection lut, 16 is normalized to 1
19:16	RW	0	reg_sr7_clr_prct_lut92:color protection lut, 16 is normalized to 1
15:12	RW	0	reg_sr7_clr_prct_lut91:color protection lut, 16 is normalized to 1
11:8	RW	0	reg_sr7_clr_prct_lut90:color protection lut, 16 is normalized to 1
7:4	RW	0	reg_sr7_clr_prct_lut89:color protection lut, 16 is normalized to 1
3:0	RW	0	reg_sr7_clr_prct_lut88:color protection lut, 16 is normalized to 1

Table 10-2337 SRSHARP1_SR7_CLR_PRT_LUT12 0x5350

Bit(s)	R/W	Default	Description
31:28	RW	0	reg_sr7_clr_prct_lut103:color protection lut, 16 is normalized to 1
27:24	RW	0	reg_sr7_clr_prct_lut102:color protection lut, 16 is normalized to 1
23:20	RW	0	reg_sr7_clr_prct_lut101:color protection lut, 16 is normalized to 1
19:16	RW	0	reg_sr7_clr_prct_lut100:color protection lut, 16 is normalized to 1
15:12	RW	0	reg_sr7_clr_prct_lut99:color protection lut, 16 is normalized to 1
11:8	RW	0	reg_sr7_clr_prct_lut98:color protection lut, 16 is normalized to 1
7:4	RW	0	reg_sr7_clr_prct_lut97:color protection lut, 16 is normalized to 1
3:0	RW	0	reg_sr7_clr_prct_lut96:color protection lut, 16 is normalized to 1

Table 10-2338 SRSHARP1_SR7_CLR_PRT_LUT13 0x5351

Bit(s)	R/W	Default	Description
31:28	RW	0	reg_sr7_clr_prct_lut111:color protection lut, 16 is normalized to 1
27:24	RW	0	reg_sr7_clr_prct_lut110:color protection lut, 16 is normalized to 1
23:20	RW	0	reg_sr7_clr_prct_lut109:color protection lut, 16 is normalized to 1
19:16	RW	0	reg_sr7_clr_prct_lut108:color protection lut, 16 is normalized to 1
15:12	RW	0	reg_sr7_clr_prct_lut107:color protection lut, 16 is normalized to 1
11:8	RW	0	reg_sr7_clr_prct_lut106:color protection lut, 16 is normalized to 1
7:4	RW	0	reg_sr7_clr_prct_lut105:color protection lut, 16 is normalized to 1
3:0	RW	0	reg_sr7_clr_prct_lut104:color protection lut, 16 is normalized to 1

Amlogic Proprietary and Confidential
Copyright © Amlogic. All rights reserved.

Table 10-2339 SRSHARP1_SR7_CLR_PRT_LUT14 0x5352

Bit(s)	R/W	Default	Description
31:28	RW	0	reg_sr7_clr_prct_lut119:color protection lut, 16 is normalized to 1
27:24	RW	0	reg_sr7_clr_prct_lut118:color protection lut, 16 is normalized to 1
23:20	RW	0	reg_sr7_clr_prct_lut117:color protection lut, 16 is normalized to 1
19:16	RW	0	reg_sr7_clr_prct_lut116:color protection lut, 16 is normalized to 1
15:12	RW	0	reg_sr7_clr_prct_lut115:color protection lut, 16 is normalized to 1
11:8	RW	0	reg_sr7_clr_prct_lut114:color protection lut, 16 is normalized to 1
7:4	RW	0	reg_sr7_clr_prct_lut113:color protection lut, 16 is normalized to 1
3:0	RW	0	reg_sr7_clr_prct_lut112:color protection lut, 16 is normalized to 1

Table 10-2340 SRSHARP1_SR7_CLR_PRT_LUT15 0x5353

Bit(s)	R/W	Default	Description
31:28	RW	0	reg_sr7_clr_prct_lut127:color protection lut, 16 is normalized to 1
27:24	RW	0	reg_sr7_clr_prct_lut126:color protection lut, 16 is normalized to 1
23:20	RW	0	reg_sr7_clr_prct_lut125:color protection lut, 16 is normalized to 1
19:16	RW	0	reg_sr7_clr_prct_lut124:color protection lut, 16 is normalized to 1
15:12	RW	0	reg_sr7_clr_prct_lut123:color protection lut, 16 is normalized to 1
11:8	RW	0	reg_sr7_clr_prct_lut122:color protection lut, 16 is normalized to 1
7:4	RW	0	reg_sr7_clr_prct_lut121:color protection lut, 16 is normalized to 1
3:0	RW	0	reg_sr7_clr_prct_lut120:color protection lut, 16 is normalized to 1

Table 10-2341 SRSHARP1_SR7_CLR_PRT_LUT16 0x5354

Bit(s)	R/W	Default	Description
31:28	RW	0	reg_sr7_clr_prct_lut135:color protection lut, 16 is normalized to 1
27:24	RW	0	reg_sr7_clr_prct_lut134:color protection lut, 16 is normalized to 1
23:20	RW	0	reg_sr7_clr_prct_lut133:color protection lut, 16 is normalized to 1
19:16	RW	0	reg_sr7_clr_prct_lut132:color protection lut, 16 is normalized to 1
15:12	RW	0	reg_sr7_clr_prct_lut131:color protection lut, 16 is normalized to 1
11:8	RW	0	reg_sr7_clr_prct_lut130:color protection lut, 16 is normalized to 1
7:4	RW	0	reg_sr7_clr_prct_lut129:color protection lut, 16 is normalized to 1
3:0	RW	0	reg_sr7_clr_prct_lut128:color protection lut, 16 is normalized to 1

Amlogic Proprietary and Confidential
Copyright © Amlogic. All rights reserved.

Table 10-2342 SRSHARP1_SR7_CLR_PRT_LUT17 0x5355

Bit(s)	R/W	Default	Description
31:28	RW	0	reg_sr7_clr_prct_lut143:color protection lut, 16 is normalized to 1
27:24	RW	0	reg_sr7_clr_prct_lut142:color protection lut, 16 is normalized to 1
23:20	RW	0	reg_sr7_clr_prct_lut141:color protection lut, 16 is normalized to 1
19:16	RW	0	reg_sr7_clr_prct_lut140:color protection lut, 16 is normalized to 1
15:12	RW	0	reg_sr7_clr_prct_lut139:color protection lut, 16 is normalized to 1
11:8	RW	0	reg_sr7_clr_prct_lut138:color protection lut, 16 is normalized to 1
7:4	RW	0	reg_sr7_clr_prct_lut137:color protection lut, 16 is normalized to 1
3:0	RW	0	reg_sr7_clr_prct_lut136:color protection lut, 16 is normalized to 1

Table 10-2343 SRSHARP1_SR7_CLR_PRT_LUT18 0x5356

Bit(s)	R/W	Default	Description
31:28	RW	0	reg_sr7_clr_prct_lut151:color protection lut, 16 is normalized to 1
27:24	RW	0	reg_sr7_clr_prct_lut150:color protection lut, 16 is normalized to 1
23:20	RW	0	reg_sr7_clr_prct_lut149:color protection lut, 16 is normalized to 1
19:16	RW	0	reg_sr7_clr_prct_lut148:color protection lut, 16 is normalized to 1
15:12	RW	0	reg_sr7_clr_prct_lut147:color protection lut, 16 is normalized to 1
11:8	RW	0	reg_sr7_clr_prct_lut146:color protection lut, 16 is normalized to 1
7:4	RW	0	reg_sr7_clr_prct_lut145:color protection lut, 16 is normalized to 1
3:0	RW	0	reg_sr7_clr_prct_lut144:color protection lut, 16 is normalized to 1

Table 10-2344 SRSHARP1_SR7_CLR_PRT_LUT19 0x5357

Bit(s)	R/W	Default	Description
31:28	RW	0	reg_sr7_clr_prct_lut159:color protection lut, 16 is normalized to 1
27:24	RW	0	reg_sr7_clr_prct_lut158:color protection lut, 16 is normalized to 1
23:20	RW	0	reg_sr7_clr_prct_lut157:color protection lut, 16 is normalized to 1
19:16	RW	0	reg_sr7_clr_prct_lut156:color protection lut, 16 is normalized to 1
15:12	RW	0	reg_sr7_clr_prct_lut155:color protection lut, 16 is normalized to 1
11:8	RW	0	reg_sr7_clr_prct_lut154:color protection lut, 16 is normalized to 1
7:4	RW	0	reg_sr7_clr_prct_lut153:color protection lut, 16 is normalized to 1
3:0	RW	0	reg_sr7_clr_prct_lut152:color protection lut, 16 is normalized to 1

Amlogic Proprietary and Confidential
Copyright © Amlogic. All rights reserved.

Table 10-2345 SRSHARP1_SR7_CLR_PRT_LUT20 0x5358

Bit(s)	R/W	Default	Description
31:28	RW	0	reg_sr7_clr_prct_lut167:color protection lut, 16 is normalized to 1
27:24	RW	0	reg_sr7_clr_prct_lut166:color protection lut, 16 is normalized to 1
23:20	RW	0	reg_sr7_clr_prct_lut165:color protection lut, 16 is normalized to 1
19:16	RW	0	reg_sr7_clr_prct_lut164:color protection lut, 16 is normalized to 1
15:12	RW	0	reg_sr7_clr_prct_lut163:color protection lut, 16 is normalized to 1
11:8	RW	0	reg_sr7_clr_prct_lut162:color protection lut, 16 is normalized to 1
7:4	RW	0	reg_sr7_clr_prct_lut161:color protection lut, 16 is normalized to 1
3:0	RW	0	reg_sr7_clr_prct_lut160:color protection lut, 16 is normalized to 1

Table 10-2346 SRSHARP1_SR7_CLR_PRT_LUT21 0x5359

Bit(s)	R/W	Default	Description
31:28	RW	0	reg_sr7_clr_prct_lut175:color protection lut, 16 is normalized to 1
27:24	RW	0	reg_sr7_clr_prct_lut174:color protection lut, 16 is normalized to 1
23:20	RW	0	reg_sr7_clr_prct_lut173:color protection lut, 16 is normalized to 1
19:16	RW	0	reg_sr7_clr_prct_lut172:color protection lut, 16 is normalized to 1
15:12	RW	0	reg_sr7_clr_prct_lut171:color protection lut, 16 is normalized to 1
11:8	RW	0	reg_sr7_clr_prct_lut170:color protection lut, 16 is normalized to 1
7:4	RW	0	reg_sr7_clr_prct_lut169:color protection lut, 16 is normalized to 1
3:0	RW	0	reg_sr7_clr_prct_lut168:color protection lut, 16 is normalized to 1

Table 10-2347 SRSHARP1_SR7_CLR_PRT_LUT22 0x535a

Bit(s)	R/W	Default	Description
31:28	RW	0	reg_sr7_clr_prct_lut183:color protection lut, 16 is normalized to 1
27:24	RW	0	reg_sr7_clr_prct_lut182:color protection lut, 16 is normalized to 1
23:20	RW	0	reg_sr7_clr_prct_lut181:color protection lut, 16 is normalized to 1
19:16	RW	0	reg_sr7_clr_prct_lut180:color protection lut, 16 is normalized to 1
15:12	RW	0	reg_sr7_clr_prct_lut179:color protection lut, 16 is normalized to 1
11:8	RW	0	reg_sr7_clr_prct_lut178:color protection lut, 16 is normalized to 1
7:4	RW	0	reg_sr7_clr_prct_lut177:color protection lut, 16 is normalized to 1
3:0	RW	0	reg_sr7_clr_prct_lut176:color protection lut, 16 is normalized to 1

Amlogic Proprietary and Confidential
Copyright © Amlogic. All rights reserved.

Table 10-2348 SRSHARP1_SR7_CLR_PRT_LUT23 0x535b

Bit(s)	R/W	Default	Description
31:28	RW	0	reg_sr7_clr_prct_lut191:color protection lut, 16 is normalized to 1
27:24	RW	0	reg_sr7_clr_prct_lut190:color protection lut, 16 is normalized to 1
23:20	RW	0	reg_sr7_clr_prct_lut189:color protection lut, 16 is normalized to 1
19:16	RW	0	reg_sr7_clr_prct_lut188:color protection lut, 16 is normalized to 1
15:12	RW	0	reg_sr7_clr_prct_lut187:color protection lut, 16 is normalized to 1
11:8	RW	0	reg_sr7_clr_prct_lut186:color protection lut, 16 is normalized to 1
7:4	RW	0	reg_sr7_clr_prct_lut185:color protection lut, 16 is normalized to 1
3:0	RW	0	reg_sr7_clr_prct_lut184:color protection lut, 16 is normalized to 1

Table 10-2349 SRSHARP1_SR7_CLR_PRT_LUT24 0x535c

Bit(s)	R/W	Default	Description
31:28	RW	0	reg_sr7_clr_prct_lut199:color protection lut, 16 is normalized to 1
27:24	RW	0	reg_sr7_clr_prct_lut198:color protection lut, 16 is normalized to 1
23:20	RW	0	reg_sr7_clr_prct_lut197:color protection lut, 16 is normalized to 1
19:16	RW	0	reg_sr7_clr_prct_lut196:color protection lut, 16 is normalized to 1
15:12	RW	0	reg_sr7_clr_prct_lut195:color protection lut, 16 is normalized to 1
11:8	RW	0	reg_sr7_clr_prct_lut194:color protection lut, 16 is normalized to 1
7:4	RW	0	reg_sr7_clr_prct_lut193:color protection lut, 16 is normalized to 1
3:0	RW	0	reg_sr7_clr_prct_lut192:color protection lut, 16 is normalized to 1

Table 10-2350 SRSHARP1_SR7_CLR_PRT_LUT25 0x535d

Bit(s)	R/W	Default	Description
31:28	RW	0	reg_sr7_clr_prct_lut207:color protection lut, 16 is normalized to 1
27:24	RW	0	reg_sr7_clr_prct_lut206:color protection lut, 16 is normalized to 1
23:20	RW	0	reg_sr7_clr_prct_lut205:color protection lut, 16 is normalized to 1
19:16	RW	0	reg_sr7_clr_prct_lut204:color protection lut, 16 is normalized to 1
15:12	RW	0	reg_sr7_clr_prct_lut203:color protection lut, 16 is normalized to 1
11:8	RW	0	reg_sr7_clr_prct_lut202:color protection lut, 16 is normalized to 1
7:4	RW	0	reg_sr7_clr_prct_lut201:color protection lut, 16 is normalized to 1
3:0	RW	0	reg_sr7_clr_prct_lut200:color protection lut, 16 is normalized to 1

Amlogic Proprietary and Confidential
Copyright © Amlogic. All rights reserved.

Table 10-2351 SRSHARP1_SR7_CLR_PRT_LUT26 0x535e

Bit(s)	R/W	Default	Description
31:28	RW	0	reg_sr7_clr_prct_lut215:color protection lut, 16 is normalized to 1
27:24	RW	0	reg_sr7_clr_prct_lut214:color protection lut, 16 is normalized to 1
23:20	RW	0	reg_sr7_clr_prct_lut213:color protection lut, 16 is normalized to 1
19:16	RW	0	reg_sr7_clr_prct_lut212:color protection lut, 16 is normalized to 1
15:12	RW	0	reg_sr7_clr_prct_lut211:color protection lut, 16 is normalized to 1
11:8	RW	0	reg_sr7_clr_prct_lut210:color protection lut, 16 is normalized to 1
7:4	RW	0	reg_sr7_clr_prct_lut209:color protection lut, 16 is normalized to 1
3:0	RW	0	reg_sr7_clr_prct_lut208:color protection lut, 16 is normalized to 1

Table 10-2352 SRSHARP1_SR7_CLR_PRT_LUT27 0x535f

Bit(s)	R/W	Default	Description
31:28	RW	0	reg_sr7_clr_prct_lut223:color protection lut, 16 is normalized to 1
27:24	RW	0	reg_sr7_clr_prct_lut222:color protection lut, 16 is normalized to 1
23:20	RW	0	reg_sr7_clr_prct_lut221:color protection lut, 16 is normalized to 1
19:16	RW	0	reg_sr7_clr_prct_lut220:color protection lut, 16 is normalized to 1
15:12	RW	0	reg_sr7_clr_prct_lut219:color protection lut, 16 is normalized to 1
11:8	RW	0	reg_sr7_clr_prct_lut218:color protection lut, 16 is normalized to 1
7:4	RW	0	reg_sr7_clr_prct_lut217:color protection lut, 16 is normalized to 1
3:0	RW	0	reg_sr7_clr_prct_lut216:color protection lut, 16 is normalized to 1

Table 10-2353 SRSHARP1_SR7_CLR_PRT_LUT28 0x5360

Bit(s)	R/W	Default	Description
31:28	RW	0	reg_sr7_clr_prct_lut231:color protection lut, 16 is normalized to 1
27:24	RW	0	reg_sr7_clr_prct_lut230:color protection lut, 16 is normalized to 1
23:20	RW	0	reg_sr7_clr_prct_lut229:color protection lut, 16 is normalized to 1
19:16	RW	0	reg_sr7_clr_prct_lut228:color protection lut, 16 is normalized to 1
15:12	RW	0	reg_sr7_clr_prct_lut227:color protection lut, 16 is normalized to 1
11:8	RW	0	reg_sr7_clr_prct_lut226:color protection lut, 16 is normalized to 1
7:4	RW	0	reg_sr7_clr_prct_lut225:color protection lut, 16 is normalized to 1
3:0	RW	0	reg_sr7_clr_prct_lut224:color protection lut, 16 is normalized to 1

Amlogic Proprietary and Confidential
Copyright © Amlogic. All rights reserved.

Table 10-2354 SRSHARP1_SR7_CLR_PRT_LUT29 0x5361

Bit(s)	R/W	Default	Description
31:28	RW	0	reg_sr7_clr_prct_lut239:color protection lut, 16 is normalized to 1
27:24	RW	0	reg_sr7_clr_prct_lut238:color protection lut, 16 is normalized to 1
23:20	RW	0	reg_sr7_clr_prct_lut237:color protection lut, 16 is normalized to 1
19:16	RW	0	reg_sr7_clr_prct_lut236:color protection lut, 16 is normalized to 1
15:12	RW	0	reg_sr7_clr_prct_lut235:color protection lut, 16 is normalized to 1
11:8	RW	0	reg_sr7_clr_prct_lut234:color protection lut, 16 is normalized to 1
7:4	RW	0	reg_sr7_clr_prct_lut233:color protection lut, 16 is normalized to 1
3:0	RW	0	reg_sr7_clr_prct_lut232:color protection lut, 16 is normalized to 1

Table 10-2355 SRSHARP1_SR7_CLR_PRT_LUT30 0x5362

Bit(s)	R/W	Default	Description
31:28	RW	0	reg_sr7_clr_prct_lut247:color protection lut, 16 is normalized to 1
27:24	RW	0	reg_sr7_clr_prct_lut246:color protection lut, 16 is normalized to 1
23:20	RW	0	reg_sr7_clr_prct_lut245:color protection lut, 16 is normalized to 1
19:16	RW	0	reg_sr7_clr_prct_lut244:color protection lut, 16 is normalized to 1
15:12	RW	0	reg_sr7_clr_prct_lut243:color protection lut, 16 is normalized to 1
11:8	RW	0	reg_sr7_clr_prct_lut242:color protection lut, 16 is normalized to 1
7:4	RW	0	reg_sr7_clr_prct_lut241:color protection lut, 16 is normalized to 1
3:0	RW	0	reg_sr7_clr_prct_lut240:color protection lut, 16 is normalized to 1

Table 10-2356 SRSHARP1_SR7_CLR_PRT_LUT31 0x5363

Bit(s)	R/W	Default	Description
31:28	RW	0	reg_sr7_clr_prct_lut255:color protection lut, 16 is normalized to 1
27:24	RW	0	reg_sr7_clr_prct_lut254:color protection lut, 16 is normalized to 1
23:20	RW	0	reg_sr7_clr_prct_lut253:color protection lut, 16 is normalized to 1
19:16	RW	0	reg_sr7_clr_prct_lut252:color protection lut, 16 is normalized to 1
15:12	RW	0	reg_sr7_clr_prct_lut251:color protection lut, 16 is normalized to 1
11:8	RW	0	reg_sr7_clr_prct_lut250:color protection lut, 16 is normalized to 1
7:4	RW	0	reg_sr7_clr_prct_lut249:color protection lut, 16 is normalized to 1
3:0	RW	0	reg_sr7_clr_prct_lut248:color protection lut, 16 is normalized to 1

Amlogic Proprietary and Confidential
Copyright © Amlogic. All rights reserved.

10.2.3.29 LC STTS / LC Curve Generator

Table 10-2357 LC_CURVE_CTRL 0x4000

Bit(s)	R/W	Default	Description
31	R/W	0	reg_lc_int_enable : 1 to enable LC_CURVE done interrupt
30: 14	R/W	0	reserved
13: 12	R/W	0	reg_lc_gclk_ctrl : gated clock control
11: 10	R/W	0	reserved
9: 8	R/W	1	reg_lc_hist_curve_nodes_hlpf: horizontal lpf of the ram_curve_nodes, 0: no LPF, 1= [1 2 1]; 2: [1 2 2 2 1]/8
7: 6	R/W	0	reserved
5: 4	R/W	1	reg_lc_hist_curve_nodes_vlpf: Vertical lpf of the ram_curve_nodes, 0: no LPF, 1= [1 2 1]; 2: [1 2 2 2 1]/8
3: 2	R/W	0	reserved
1	R/W	1	reg_lc_blackbar_mute_en: mute the black bar corresponding bin, 0: no mute, 1: mute enable
0	R/W	0	reg_lc_curve_en

Table 10-2358 LC_CURVE_HV_NUM 0x4001

Bit(s)	R/W	Default	Description
31: 13	R/W	0	reserved
12: 8	R/W	12	reg_lc_cur_blk_hnum: lc processing region number of H, maximum to 12
7: 5	R/W	0	reserved
4: 0	R/W	8	reg_lc_cur_blk_vnum: lc processing region number of V, maximum to 8

Table 10-2359 LC_CURVE_LMT_RAT 0x4002

Bit(s)	R/W	Default	Description
31: 16	R/W	0	reserved
15: 8	R/W	6	reg_lmtrat_minmax: x/1024 of amount
7: 0	R/W	0x14	reg_lmtrat_valid: x/1024 of amount

Table 10-2360 LC_CURVE_CONTRAST_LH 0x4003

Bit(s)	R/W	Default	Description
31: 26	R/W	0	reserved
25: 16	R/W	0x10	reg_lc_contrast_low: contrast gain to the lc for dark side, normalized 256 as "1"
15: 10	R/W	0	reserved
9: 0	R/W	0x18	reg_lc_contrast_hig: contrast gain to the lc for bright side, normalized 256 as "1"

Amlogic Proprietary and Confidential
Copyright © Amlogic. All rights reserved.

Table 10-2361 LC_CURVE_CONTRAST__LMT_LH 0x4004

Bit(s)	R/W	Default	Description
31: 24	R/W	0xa	reg_lc_cntstlmt_low_0: limit for the contrast low
23: 16	R/W	0x14	reg_lc_cntstlmt_hig_0: limit for the contrast high
15: 8	R/W	0xff	reg_lc_cntstlmt_low_1:limit for the contrast low
7: 0	R/W	0xff	reg_lc_cntstlmt_hig_1:limit for the contrast high

Table 10-2362 LC_CURVE_CONTRAST_SCL_LH 0x4005

Bit(s)	R/W	Default	Description
31: 16	R/W	0	reserved
15: 8	R/W	0x40	reg_lc_cntstscl_low: scale for the contrast low, norm 8 as 1
7: 0	R/W	0x20	reg_lc_cntstscl_hig: scale for the contrast high,norm 8 as 1

Table 10-2363 LC_CURVE_CONTRAST_BVN_LH 0x4006

Bit(s)	R/W	Default	Description
31: 16	R/W	0	reserved
15: 8	R/W	32	reg_lc_cntstbvn_low: scale to num_m as limit of min_val to minBV distance, to protect mono-color.
7: 0	R/W	32	reg_lc_cntstscl_hig: scale for the contrast high,norm 8 as 1

Table 10-2364 LC_CURVE_MISC0 0x4007

Bit(s)	R/W	Default	Description
31: 20	R/W	0	reserved
19: 16	R/W	1	reg_lc_num_m_coring: coring to num_m, soft coring
15: 8	R/W	0x30	reg_lc_vbin_min: 4x is min width of valid histogram bin num
7: 0	R/W	0x38	reg_lc_slope_max_face: maximum slope for the pkBin-maxBV range curve to do face protection

Table 10-2365 LC_CURVE_YPKBV_RAT 0x4008

Bit(s)	R/W	Default	Description
31: 24	R/W	0x8c	reg_lc_ypkbv_ratio_0: x= ratio*(maxBv-minBv)+min_val as low bound of the ypkBV; normalized to 256 as 1
23: 16	R/W	0xa0	reg_lc_ypkbv_ratio_1
15: 8	R/W	0x78	reg_lc_ypkbv_ratio_2:
7: 0	R/W	0x60	reg_lc_ypkbv_ratio_3:

Amlogic Proprietary and Confidential
Copyright © Amlogic. All rights reserved.

Table 10-2366 LC_CURVE_YPKBV_SLP_LMT 0x4009

Bit(s)	R/W	Default	Description
31: 16	R/W	0	reserved
15: 8	R/W	0xc	reg_lc_ypkbv_slope_lmt_0: min max slop for the curves to avoid artifacts, for min_slope
7: 0	R/W	0x60	reg_lc_ypkbv_slope_lmt_1: min max slop for the curves to avoid artifacts, for max_slope

Table 10-2367 LC_CURVE_YMINVAL_LMT_0_1 0x400a

Bit(s)	R/W	Default	Description
31: 26	R/W	0	reserved
25: 16	R/W	0x30	reg_lc_yminval_lmt_0: lmt_val = lmt[minBV(64:64:768)], and yminV = MAX(yminV,lmt_val), for very dark region boost.
15: 10	R/W	0	reserved
9: 0	R/W	0x50	reg_lc_yminval_lmt_1

Table 10-2368 LC_CURVE_YMINVAL_LMT_2_3 0x400b

Bit(s)	R/W	Default	Description
31: 26	R/W	0	reserved
25: 16	R/W	0x78	reg_lc_yminval_lmt_2
15: 10	R/W	0	reserved
9: 0	R/W	0x80	reg_lc_yminval_lmt_3

Table 10-2369 LC_CURVE_YMINVAL_LMT_4_5 0x400c

Bit(s)	R/W	Default	Description
31: 26	R/W	0	reserved
25: 16	R/W	0xa0	reg_lc_yminval_lmt_4
15: 10	R/W	0	reserved
9: 0	R/W	0xc4	reg_lc_yminval_lmt_5

Table 10-2370 LC_CURVE_YMINVAL_LMT_6_7 0x400d

Bit(s)	R/W	Default	Description
31: 26	R/W	0	reserved
25: 16	R/W	0xe0	reg_lc_yminval_lmt_6
15: 10	R/W	0	reserved
9: 0	R/W	0x100	reg_lc_yminval_lmt_7

Amlogic Proprietary and Confidential
Copyright © Amlogic. All rights reserved.

Table 10-2371 LC_CURVE_YMINVAL_LMT_8_9 0x400e

Bit(s)	R/W	Default	Description
31: 26	R/W	0	reserved
25: 16	R/W	0x120	reg_lc_yminval_lmt_8
15: 10	R/W	0	reserved
9: 0	R/W	0x140	reg_lc_yminval_lmt_9

Table 10-2372 LC_CURVE_YMINVAL_LMT_10_11 0x400f

Bit(s)	R/W	Default	Description
31: 26	R/W	0	reserved
25: 16	R/W	0x160	reg_lc_yminval_lmt_10
15: 10	R/W	0	reserved
9: 0	R/W	0x190	reg_lc_yminval_lmt_11

Table 10-2373 LC_CURVE_YMAXVAL_LMT_0_1 0x4010

Bit(s)	R/W	Default	Description
31: 26	R/W	0	reserved
25: 16	R/W	0x78	reg_lc_ymaxval_lmt_0: lmt_val = 4*lmt[maxBV(64:64:1023) and ymaxV = MAX(ymaxV,lmt[maxBV])
15: 10	R/W	0	reserved
9: 0	R/W	0x96	reg_lc_ymaxval_lmt_1

Table 10-2374 LC_CURVE_YMAXVAL_LMT_2_3 0x4011

Bit(s)	R/W	Default	Description
31: 26	R/W	0	reserved
25: 16	R/W	0xe6	reg_lc_ymaxval_lmt_2
15: 10	R/W	0	reserved
9: 0	R/W	0x112	reg_lc_ymaxval_lmt_3

Table 10-2375 LC_CURVE_YMAXVAL_LMT_4_5 0x4012

Bit(s)	R/W	Default	Description
31: 26	R/W	0	reserved
25: 16	R/W	0x14a	reg_lc_ymaxval_lmt_4
15: 10	R/W	0	reserved
9: 0	R/W	0x180	reg_lc_ymaxval_lmt_5

Amlogic Proprietary and Confidential
Copyright © Amlogic. All rights reserved.

Table 10-2376 LC_CURVE_YMAXVAL_LMT_6_7 0x4013

Bit(s)	R/W	Default	Description
31: 26	R/W	0	reserved
25: 16	R/W	0x1d4	reg_lc_ymaxval_lmt_6
15: 10	R/W	0	reserved
9: 0	R/W	0x200	reg_lc_ymaxval_lmt_7

Table 10-2377 LC_CURVE_YMAXVAL_LMT_8_9 0x4014

Bit(s)	R/W	Default	Description
31: 26	R/W	0	reserved
25: 16	R/W	0x240	reg_lc_ymaxval_lmt_8
15: 10	R/W	0	reserved
9: 0	R/W	0x280	reg_lc_ymaxval_lmt_9

Table 10-2378 LC_CURVE_YMAXVAL_LMT_10_11 0x4015

Bit(s)	R/W	Default	Description
31: 26	R/W	0	reserved
25: 16	R/W	0x280	reg_lc_ymaxval_lmt_10
15: 10	R/W	0	reserved
9: 0	R/W	0x280	reg_lc_ymaxval_lmt_11

Table 10-2379 LC_CURVE_HISTVLD_THRD 0x4016

Bit(s)	R/W	Default	Description
31: 12	R/W	0	reserved
11: 0	R/W	0x1fa	reg_lc_histvld_thrd: threshold to compare to bin to get number of valid bins

Table 10-2380 LC_CURVE_BB_MUTE_THRD 0x4017

Bit(s)	R/W	Default	Description
31: 24	R/W	0	reserved
23: 0	R/W	0x2a30	reg_lc_blackbar_mute_thrd: 1/8 of the region

Table 10-2381 LC_CURVE_INT_STATUS 0x4018

Bit(s)	R/W	Default	Description
31: 1	R/W	0	reserved
0	R/W	0	Status to indicate LC curve done, write 1 to clear.

Amlogic Proprietary and Confidential
Copyright © Amlogic. All rights reserved.

Table 10-2382 LC_CURVE_RAM_CTRL 0x4020

Bit(s)	R/W	Default	Description
31:1	R/W	0	reserved
0	R/W	0	reg_lc_cbus2ram_en: 1 to enable CBUS read data from LC Curve RAM

Table 10-2383 LC_CURVE_RAM_ADDR 0x4021

Bit(s)	R/W	Default	Description
31:7	R/W	0	reserved
6:4	R/W	0	Vidx of LC CURVE RAM to read
3:0	R/W	0	Hidx of LC CURVE RAM to read

Table 10-2384 LC_CURVE_RAM_DATA 0x4022

Bit(s)	R/W	Default	Description
31:30	R/W	0	reserved
29:0	R/W	0	LC Curve RAM data for read

Table 10-2385 LC_CURVE_YMINVAL_LMT_12_13 0x4040

Bit(s)	R/W	Default	Description
31: 26	R/W	0	reserved
25: 16	R/W	0x160	reg_lc_yminval_lmt_12
15: 10	R/W	0	reserved
9: 0	R/W	0x190	reg_lc_yminval_lmt_13

Table 10-2386 LC_CURVE_YMINVAL_LMT_14_15 0x4041

Bit(s)	R/W	Default	Description
31: 26	R/W	0	reserved
25: 16	R/W	0x160	reg_lc_yminval_lmt_14
15: 10	R/W	0	reserved
9: 0	R/W	0x190	reg_lc_yminval_lmt_15

Table 10-2387 LC_CURVE_YMAXVAL_LMT_12_13 0x4042

Bit(s)	R/W	Default	Description
31: 26	R/W	0	reserved
25: 16	R/W	0x280	reg_lc_ymaxval_lmt_12
15: 10	R/W	0	reserved
9: 0	R/W	0x280	reg_lc_ymaxval_lmt_13

Amlogic Proprietary and Confidential
Copyright © Amlogic. All rights reserved.

Table 10-2388 LC_CURVE_YMAXVAL_LMT_14_15 0x4043

Bit(s)	R/W	De-fault	Description
31: 26	R/W	0	reserved
25: 16	R/W	0x280	reg_lc_ymaxval_lmt_14
15: 10	R/W	0	reserved
9: 0	R/W	0x280	reg_lc_ymaxval_lmt_15

Table 10-2389 LC_CURVE_YPKBV_LMT_0_1 0x4044

Bit(s)	R/W	Default	Description
31: 26	R/W	0	reserved
25: 16	R/W	0x78	reg_lc_ypkbv_lmt_0: lmt_val = 4*lmt[pkBV(64:64:1023) and ypkBV = MAX(ypkBV,lmt[pkBV])
15: 10	R/W	0	reserved
9: 0	R/W	0x96	reg_lc_ypkbv_lmt_1

Table 10-2390 LC_CURVE_YPKBV_LMT_2_3 0x4045

Bit(s)	R/W	Default	Description
31: 26	R/W	0	reserved
25: 16	R/W	0xe6	reg_lc_ypkbv_lmt_2
15: 10	R/W	0	reserved
9: 0	R/W	0x112	reg_lc_ypkbv_lmt_3

Table 10-2391 LC_CURVE_YPKBV_LMT_4_5 0x4046

Bit(s)	R/W	Default	Description
31: 26	R/W	0	reserved
25: 16	R/W	0x14a	reg_lc_ypkbv_lmt_4
15: 10	R/W	0	reserved
9: 0	R/W	0x180	reg_lc_ypkbv_lmt_5

Table 10-2392 LC_CURVE_YPKBV_LMT_6_7 0x4047

Bit(s)	R/W	Default	Description
31: 26	R/W	0	reserved
25: 16	R/W	0x1d4	reg_lc_ypkbv_lmt_6
15: 10	R/W	0	reserved
9: 0	R/W	0x200	reg_lc_ypkbv_lmt_7

Amlogic Proprietary and Confidential
Copyright © Amlogic. All rights reserved.

Table 10-2393 LC_CURVE_YPKBV_LMT_8_9 0x4048

Bit(s)	R/W	Default	Description
31: 26	R/W	0	reserved
25: 16	R/W	0x240	reg_lc_ypkbv_lmt_8
15: 10	R/W	0	reserved
9: 0	R/W	0x280	reg_lc_ypkbv_lmt_9

Table 10-2394 LC_CURVE_YPKBV_LMT_10_11 0x4049

Bit(s)	R/W	Default	Description
31: 26	R/W	0	reserved
25: 16	R/W	0x280	reg_lc_ypkbv_lmt_10
15: 10	R/W	0	reserved
9: 0	R/W	0x280	reg_lc_ypkbv_lmt_11

Table 10-2395 LC_CURVE_YPKBV_LMT_12_13 0x404a

Bit(s)	R/W	Default	Description
31: 26	R/W	0	reserved
25: 16	R/W	0x280	reg_lc_ypkbv_lmt_12
15: 10	R/W	0	reserved
9: 0	R/W	0x280	reg_lc_ypkbv_lmt_13

Table 10-2396 LC_CURVE_YPKBV_LMT_14_15 0x404b

Bit(s)	R/W	Default	Description
31: 26	R/W	0	reserved
25: 16	R/W	0x280	reg_lc_ypkbv_lmt_14
15: 10	R/W	0	reserved
9: 0	R/W	0x280	reg_lc_ypkbv_lmt_15

Table 10-2397 LC_STTS_GCLK_CTRL0 0x4028

Bit(s)	R/W	Default	Description
7:0	R/W	0	gate clock

Table 10-2398 LC_STTS_CTRL0 0x4029

Bit(s)	R/W	Default	Description
31:24	R/W	0	reg_bit_sel : 12bit to 10bit for 8 input
23:22	R/W	0	no use

Amlogic Proprietary and Confidential
Copyright © Amlogic. All rights reserved.

Bit(s)	R/W	Default	Description
21	R/W	0	1: input format is RGB 0: input format is YUV
20	R/W	0	1: input format is RGB 0: input format is YUV
18:16	R/W	0	matrix_conv_rs
15:14	R/W	0	no use
12	R/W	0	no use
11	R/W	0	highlight enable
10	R/W	0	probe enable
9	R/W	0	probe post enable
8-6	R/W	0	input data component mux
5-3	R/W	0	input data sel
2	R/W	0	matrix enable
1	R/W	0	no use
0	R/W	0	soft reset

Table 10-2399 LC_STTS_WIDTHM1_HEIGHTM1 0x402a

Bit(s)	R/W	Default	Description
28:16	R/W	0	width m1
12:0	R/W	0	height m1

LC_STTS_MATRIX_COEF00_01 0x402b

See: VPP_VD1_MATRIX_COEF00_01

LC_STTS_MATRIX_COEF02_10 0x402c

See: VPP_VD1_MATRIX_COEF02_10

LC_STTS_MATRIX_COEF11_12 0x402d

See: VPP_VD1_MATRIX_COEF11_12

LC_STTS_MATRIX_COEF20_21 0x402e

See: VPP_VD1_MATRIX_COEF20_21

LC_STTS_MATRIX_COEF22 0x402f

See: VPP_VD1_MATRIX_COEF22

LC_STTS_MATRIX_OFFSET0_1 0x4030

See: VPP_VD1_MATRIX_OFFSET0_1

LC_STTS_MATRIX_OFFSET2 0x4031

See: VPP_VD1_MATRIX_OFFSET2

LC_STTS_MATRIX_PRE_OFFSET0_1 0x4032

Amlogic Proprietary and Confidential
Copyright © Amlogic. All rights reserved.

See: VPP_VD1_MATRIX_PRE_OFFSET0_1

LC_STTS_MATRIX_PRE_OFFSET2 0x4033

See: VPP_VD1_MATRIX_PRE_OFFSET2

Table 10-2400 LC_STTS_MATRIX_PROBE_COLOR 0x4036

Bit(s)	R/W	Default	Description
29-20	R	0	component 0
19-10	R	0	component 1
9-0	R	0	component 2

Table 10-2401 LC_STTS_MATRIX_HL_COLOR 0x4034

Bit(s)	R/W	Default	Description
23-16	R/W	0	component 0
15-8	R/W	0	component 1
7-0	R/W	0	component 2

Table 10-2402 LC_STTS_MATRIX_PROBE_POS 0x4035

Bit(s)	R/W	Default	Description
28-16	R/W	0	probe x, position
12-0	R/W	0	probe y, postion

Table 10-2403 LC_STTS_HIST_REGION_IDX 0x4037

Bit(s)	R/W	Default	Description
31	R	0	local contrast max statistic enable
28	R	0	eol enable
27-25	R	0	vertical line overlap number for max finding
24-22	R	0	horizontal pixel overlap number, 0: 17 pix, 1: 9 pix, 2: 5 pix, 3: 3 pix, 4: 0 pix
20	R	0	1,2,1 low pass filter enable before max/hist statistic
19-16	R	0	region H/V position index, refer to VDIN_LDIM_STTS_HIST_SET_REGION
15	R	0	1: region read index auto increase per read to VDIN_LDIM_STTS_HIST_READ_REGION
6-0	R	0	region read index

Amlogic Proprietary and Confidential
Copyright © Amlogic. All rights reserved.

Table 10-2404 LC_STTS_HIST_SET_REGION 0x4038

Bit(s)	R/W	Default	Description
28:16	R	0	if LC_STTS_HIST_REGION_IDX[19:16] == 5'h0: read/write hvstart0 if LC_STTS_HIST_REGION_IDX[19:16] == 5'h1: read/write hend01 if LC_STTS_HIST_REGION_IDX[19:16] == 5'h2: read/write vend01 if LC_STTS_HIST_REGION_IDX[19:16] == 5'h3: read/write hend23 if LC_STTS_HIST_REGION_IDX[19:16] == 5'h4: read/write vend23 if LC_STTS_HIST_REGION_IDX[19:16] == 5'h5: read/write hend45 if LC_STTS_HIST_REGION_IDX[19:16] == 5'h6: read/write vend45 if LC_STTS_HIST_REGION_IDX[19:16] == 5'd7: read/write hend67 if LC_STTS_HIST_REGION_IDX[19:16] == 5'h8: read/write vend67 if LC_STTS_HIST_REGION_IDX[19:16] == 5'h9: read/write hend89 if LC_STTS_HIST_REGION_IDX[19:16] == 5'ha: read/write vend89 //hvstart0, Bit 28:16 row0 vstart, Bit 12:0 col0 hstart //hend01, Bit 28:16 col1 hend, Bit 12:0 col0 hend //vend01, Bit 28:16 row1 vend, Bit 12:0 row0 vend //hend23, Bit 28:16 col3 hend, Bit 12:0 col2 hend //vend23, Bit 28:16 row3 vend, Bit 12:0 row2 vend //hend45, Bit 28:16 col5 hend, Bit 12:0 col4 hend //vend45, Bit 28:16 row5 vend, Bit 12:0 row4 vend //hend67, Bit 28:16 col7 hend, Bit 12:0 col6 hend //vend67, Bit 28:16 row7 vend, Bit 12:0 row6 vend //hend89, Bit 28:16 col9 hend, Bit 12:0 col8 hend //vend89, Bit 28:16 row9 vend, Bit 12:0 row8 vend
12:0	R	0	

Table 10-2405 LC_STTS_HIST_READ_REGION 0x4039

Bit(s)	R/W	Default	Description
29:20	R	0	Max_comp2
19:10	R	0	Max_comp1
9:0	R	0	Max_comp0

Table 10-2406 LC_STTS_HIST_START_RD_REGION 0x403a

Bit(s)	R/W	Default	Description
29:0	R	0	region data

Table 10-2407 LC_STTS_WHITE_INFO 0x403b

Bit(s)	R/W	Default	Description
31:8	R	0	white data count
7:0	R/W	0xf0	white data threshold

Table 10-2408 LC_STTS_BLACK_INFO 0x403c

Bit(s)	R/W	Default	Description
31:8	R	0	black data count
7:0	R/W	0x10	black data threshold

Amlogic Proprietary and Confidential
Copyright © Amlogic. All rights reserved.

10.2.3.30 OSD1 Registers

Table 10-2409 VIU_OSD1_CTRL_STAT 0x1A10

Bit(s)	R/W	Default	Description
31	R/W	0	osd_cfg_syn_en : // unsigned , default =0 1: module enable sync by go_field 0: normal
30	R/W	0	ENABLE_FREE_CLK. 1 = Use free-running clock; 0 = Use gated clock to save power.
29	R	0	TEST_RD_DSR: Applicable only when OSD debug mode is enabled. 1 = A new pixel is ready at register VIU_OSD1_TEST_RDDATA; 0 = No data ready.
/	/	/	/
27-24	R	0	OSD_BLK_MODE: the input pixel format of which the current OSD block is being processed. Mali src & normal src have different pixel format value for same format
23-22	R	0	OSD_BLK_PTR: The number of the current OSD block that is being processed.
21	R	0	OSD_ENABLE. 1 = OSD display is enabled; 0 = disabled.
20-12	R/W	0	GLOBAL_ALPHA: legal range 0 – 256. It is a 9-bit value that is multiplied to all output pixel's Alpha value, and then normalized, i.e.: Alpha_tmp = Alpha_internal + (Alpha_internal == 0 ? 0 : 1); Alpha_out = (Alpha_tmp * GLOBAL_ALPHA) / 256;
11	R/W	0	TEST_RD_EN: OSD debug mode enable. 1 = Output pixels are not routed to VPP, instead they are presented on registers VIU_OSD1_TEST_RDDATA, for CPU to read. 0 = Normal mode, pixels are output to VPP.
10-9	R/W	0	unused
8-5	R/W	0	CTRL_MTCH_Y: For OSD 444, 422 or 16-bit (COLOR_MATRIX = 0 or 1) mode, the input pixels contain no Alpha information, in order to associated the output pixel with an Alpha value, the following steps are taken: If TC_ALPHA_EN = 0, then all output pixels use a default Alpha value 0xFF; If TC_ALPHA_EN = 1, then the Alpha value is looked up by matching the pixel's Y/Cb/Cr against four Alpha registers' Y/Cb/Cr. If the pixel matches any one of the Alpha registers, then this register's Alpha value is used; If the pixel matches with more than one of the Alpha registers, then the lower Alpha register takes priority, e.g. use Alpha Reg0's value if the pixel match both Alpha Reg0 and Reg1; If no match, then use default Alpha value 0xFF. There are two ways of matching: one way is that the pixel has to compare all Y, Cb and Cr value with the Alpha registers; the other way is that the pixel only has to compare Y value with the Alpha registers. CTRL_MTCH_Y defines which way is used to determine a match. Bit[0] is for matching Alpha register 0: 1 = only need to compare Y; 0 = compare all Y, Cb and Cr. Bit[1] is for matching Alpha register 1: 1 = only need to compare Y; 0 = compare all Y, Cb and Cr. Bit[2] is for matching Alpha register 2: 1 = only need to compare Y; 0 = compare all Y, Cb and Cr. Bit[3] is for matching Alpha register 3: 1 = only need to compare Y; 0 = compare all Y, Cb and Cr.
4	R/W	0	CTRL_422TO444. 1 = Enable conversion of 422 format input to 444 format output; 0 = Disable 422 to 444 conversion.
/	/	/	/
2	R/W	0	osd_mem_mode : // unsigned , default =0 0:canvas_araddr 1: linear_araddr (mali src must use this mode)

Amlogic Proprietary and Confidential
Copyright © Amlogic. All rights reserved.

Bit(s)	R/W	Default	Description
1	R/W	0	premult_en : // unsigned , default =0
0	R/W	0	OSD_BLK_ENABLE: Each bit to enable display an OSD block

Table 10-2410 VIU_OSD1_CTRL_STAT2 0x1A2d

Bit(s)	R/W	Default	Description
31-16	R	0	unused
15	R/W	0	unused
14	R/W	0	Replaced_alpha_en
13-6	R/W	0	Replaced_alpha
5-4	R/W	0	Hold_fifo_lines[6:5]
3	R/W	0	RGBYUV_FULL_RANGE: Select coefficients for applicable output range. 1 = output full range 0-255; 0 = output range 16-235.
2	R/W	0	ALPHA_9B_MODE: Define how to expand 8-bit alpha value to 9-bit. 1 = The formula is (Alpha < 128) ? Alpha : Alpha + 1; 0 = The formula is (Alpha == 0) ? Alpha : Alpha + 1.
1	R/W	0	Pedding status cleanup
0	R/W	0	COLOR_EXPAND_MODE. 1 = Expand the color components to 8-bit by padding LSBs with MSBs. E.g. If the input is 5'b11000, the output is expanded to 8'b11000110; 0 = Expand the color components to 8-bit by padding LSBs with 0.

VIU_OSD1_TCOLOR_AG0 0x1A17

VIU_OSD1_TCOLOR_AG1 0x1A18

VIU_OSD1_TCOLOR_AG2 0x1A19

VIU_OSD1_TCOLOR_AG3 0x1A1a

Table 10-2411 Define Alpha register 0/1/2/3 values

Bit(s)	R/W	Default	Description
31-24	R/W	0xFF	Y or R.
23-16	R/W	0xFF	CB or G.
15-8	R/W	0xFF	CR or B.
7-0	R/W	0xFF	ALPHA.

VIU_OSD1_BLK0_CFG_W0 0x1A1b

Defines display block 0/1/2/3's property, word 0.

Table 10-2412

Bit(s)	R/W	Default	Description
31	R/W	0	Reserved
30	R/W	0	mali_src_en 1: read data from mali afbcd decoder

Amlogic Proprietary and Confidential
Copyright © Amlogic. All rights reserved.

Bit(s)	R/W	Default	Description
			0: read data from DDR directly
29	R/W	0	y_rev: 0=normal read, 1=reverse read in Y direction
28	R/W	0	x_rev: 0=normal read, 1=reverse read in X direction
27-24	R/W	0	Reserved
23-16	R/W	0	TBL_ADDR. Linear address,TBL_ADDR = data_addr >> 4 bits
15	R/W	0	LITTLE_ENDIAN: define the of data stored in DDR. 1 = Data stored in DDR memory are of little endian; 0 = Data stored in DDR memory are of big endian.
14	R/W	0	RPT_Y: For reducing data size stored in DDR. 1 = For each line, OSD will display twice; 0 = No repeat, OSD display once per line.
13-12	R/W	0	INTERP_CTRL: If enabled, interpolate a data after each incoming pixels, in order to save DDR bandwidth. 0 = No interpolation; 1 = unused, no interpolation; 2 = Interpolate with preceding pixel value; 3 = Interpolate with the averaged value between the preceding pixel and the next pixel.
11-8	R/W	0	OSD_BLK_MODE: Define the OSD block's input pixel format according bit30. Bit30 == 0: 0 = 2-bit per pixel, totally 4 colors can be looked up from color palette LUT,Only OSD2 have; 1 = 4-bit per pixel, totally 16 colors can be looked up from color palette LUT,Only OSD2 have; 2 = 8-bit per pixel, totally 256 colors can be looked up from color palette LUT,Only OSD2 have; 3 = 4:2:2 mode. Input 32-bit data for 2 pixels. Bit[31:24] is Y0, bit [23:16] is Cb0, bit[15:8] is Y1, bit [7:0] is Cr0, for Alpha value refer to reg VIU_OSD1_CTRL_STAT.CTRL_MTCH_Y; 4 = 16-bit mode. Refer to COLOR_MATRIX; 5 = 32-bit mode. Refer to COLOR_MATRIX; 6 = unused; 7 = 24-bit mode. Refer to COLOR_MATRIX; 8-15 = unused; Bit30 == 1: 0□R8 1□8bit yuv422 2□RGB565 3□RGBA5551 4□RGBA4444 5□RGBA8888 7□RGB888 8□10bit yuv422 9□RGBA1010102 Other:unuse
6	R/W	0	TC_ALPHA_EN: refer to reg VIU_OSD1_CTRL_STAT.CTRL_MTCH_Y. 1 = Enable alpha register matching. 0 = Disable.
5-2	R/W	0	COLOR_MATRIX: Applicable only to 16-bit color mode (OSD_BLK_MODE=4), 32-bit mode (OSD_BLK_MODE=5) and 24-bit mode (OSD_BLK_MODE=7), defines the bit-field allocation of the pixel data. For expanding the bit-fields to full 8-bit, refer to VIU_OSD1_CTRL_STAT2.color_expand_mode . For 16-bit mode (OSD_BLK_MODE=4): 0 = 6:5:5 format. Bit[15:10] is Y[7:2] or R[7:2], bit[9:5] is Cb[7:3] or G[7:3], bit[4:0] is Cr[7:3] or B[7:3], for Alpha value refer to reg VIU_OSD1_CTRL_STAT.CTRL_MTCH_Y; 1 = 8:4:4 format. Bit[15:8] is Y or R, bit[7:4] is Cb[7:4] or G[7:4], bit[3:0] is Cr[7:4] or B[7:4]], for Alpha value refer to reg VIU_OSD1_CTRL_STAT.CTRL_MTCH_Y; 4 = 5:6:5 format. Bit[15:11] is Y[7:3] or R[7:3], bit[10:5] is Cb[7:2] or G[7:2], bit[4:0] is Cr[7:3] or B[7:3], for Alpha value refer to reg VIU_OSD1_CTRL_STAT.CTRL_MTCH_Y; For 32-bit mode (OSD_BLK_MODE=5): 0 = RGBA 8:8:8:8 format. Bit[31:24] is Y or R, bit[23:16] is Cb or G; bit[15:8] is Cr or B; bit[7:0] is Alpha; 1 = ARGB 8:8:8:8 format. Bit[31:24] is Alpha, bit[23:16] is Y or R; bit[15:8] is Cb or G; bit[7:0] is Cr or B; 2 = ABGR 8:8:8:8 format. Bit[31:24] is Alpha, bit[23:16] is Cr or B; bit[15:8] is Cb or G; bit[7:0] is Y or R; 3 = BGRA 8:8:8:8 format. Bit[31:24] is Cr or B, bit[23:16] is Cb or G; bit[15:8] is Y or R; bit[7:0] is Alpha. For 24-bit mode (OSD_BLK_MODE=7): 0 = RGB 8:8:8 mode. Bit[23:16] is Y or R, bit[15:8] is Cb or G, bit[7:0] is Cr or B, for Alpha value refer to reg VIU_OSD1_CTRL_STAT.CTRL_MTCH_Y;

Amlogic Proprietary and Confidential
Copyright © Amlogic. All rights reserved.

Bit(s)	R/W	Default	Description
			5 = BGR 8:8:8 mode. Bit[23:16] is Cr or B, bit[15:8] is Cb or G, bit[7:0] is Y or R, for Alpha value refer to reg VIU_OSD1_CTRL_STAT.CTRL_MTCH_Y.
1	R/W	0	INTERLACE_EN. 1 = Enable interlace mode. 0 = Disable.
0	R/W	0	INTERLACE_SEL_ODD: Applicable only if INTERLACE_EN = 1. 1 = Only output odd lines; 0 = Only output even lines.

Table 10-2413 VIU_OSD1_BLK0_CFG_W1 0x1A1c

Defines display block 0/1/2/3’s property, word 1.

Bit(s)	R/W	Default	Description
31-29	R/W	0	Unused.
28-16	R/W	0	X_END. Virtual canvas co-ordinate.
15-13	R/W	0	Unused.
12-0	R/W	0	X_START. Virtual canvas co-ordinate.

Table 10-2414 VIU_OSD1_BLK0_CFG_W2 0x1A1d

Defines display block 0/1/2/3’s property, word 2.

Bit(s)	R/W	Default	Description
31-29	R/W	0	Unused.
28-16	R/W	0	Y_END. Virtual canvas co-ordinate.
15-13	R/W	0	Unused.
12-0	R/W	0	Y_START. Virtual canvas co-ordinate.

Table 10-2415 VIU_OSD1_BLK0_CFG_W3 0x1A1e

Defines display block 0/1/2/3’s property, word 3.

Bit(s)	R/W	Default	Description
31-28	R/W	0	Unused.
27-16	R/W	0	H_END. Display horizontal co-ordinate.
15-12	R/W	0	Unused.
11-0	R/W	0	H_START. Display horizontal co-ordinate.

Table 10-2416 VIU_OSD1_BLK0_CFG_W4 0x1A13

Defines display block 0/1/2/3’s property, word 4.

Amlogic Proprietary and Confidential
Copyright © Amlogic. All rights reserved.

Bit(s)	R/W	Default	Description
31-28	R/W	0	Unused.
27-16	R/W	0	V_END. Display vertical co-ordinate.
15-12	R/W	0	Unused.
11-0	R/W	0	V_START. Display vertical co-ordinate.

Table 10-2417 VIU_OSD1_BLK1_CFG_W4 0x1a14

Bit(s)	R/W	Default	Description
31:0	R/W	0	Frame_addr: // unsigned , default =0 Frame_addr in linear_addr

Table 10-2418 VIU_OSD1_BLK2_CFG_W4 0x1a15

Bit(s)	R/W	Default	Description
31:0	R/W	0	Line_stride : // unsigned , default =0 Line_stride in linear_addr

Table 10-2419 VIU_OSD1_FIFO_CTRL_STAT 0x1A2b

Bit(s)	R/W	Default	Description
31	R/W	0	burst_len_sel[2] of [2:0]
30	R/W	0	BYTE_SWAP: In addition to endian control, further define whether to swap upper byte and lower byte within a 16-bit memory word. 1 = Swap, data[15:0] becomes {data[7:0], data[15:8]}; 0 = No swap, data[15:0] is still data[15:0].
29	R/W	0	Div_swap : swap the 2 64bits word in 128bits word
28-24	R/W	0	Fifo_lim : when osd fifo is small than the fifo_lim*16, closed the req port of osd_ rd_mif
23-22	R/W	0	Fifo_ctrl: 00 : for 1 word in 1 burst, 01 : for 2words in 1burst, 10 : for 4 words in 1burst, 11: reserved
21-20	R	0	FIFO_ST: State of the FIFO activity. 0 = Idle; 1 = FIFO requesting; 2 = FIFO request aborting.
19	R	0	FIFO_OVERFLOW.
18-12	R/W	32	FIFO_DEPTH_VAL: Define the depth of FIFO which stores 128-bit data from DDR to be FIFO_DEPTH_VAL * 8.
11-10	R/W	0	BURST_LEN_SEL[1:0] of [2:0]: Define DDR burst request length. 0 = up to 24 per burst; 1 = up to 32 per burst; 2 = up to 48 per burst;/ 3 = up to 64 per burst. 4 = up to 96 per burst, 5 = up to 128 per burst
9-5	R/W	4	HOLD_FIFO_LINES: The number of lines that OSD must wait after VSYNC, before it starts request data from DDR .
4	R/W	0	CLEAR_ERR: One pulse to clear error status.
3	R/W	0	FIFO_SYNC_RST: Set 1 to reset OSD FIFO.

Amlogic Proprietary and Confidential
Copyright © Amlogic. All rights reserved.

Bit(s)	R/W	Default	Description
2-1	R/W	0	ENDIAN: define the endianess of the 64-bit data stored in memory, and how to convert. 0 = No convertion; 1 = Convert to {din[31:0], din[63:32]}; 2 = Convert to {din[15:0], din[31:16], din[47:32], din[63:48]}; 3 = Convert to {din[47:32], din[63:48], din[15:0], din[31:16]};
0	R/W	0	URGENT. 1 = Set DDR request priority to be urgent; 0 = Set DDR request priority to be normal.

Table 10-2420 VIU_OSD1_TEST_RDDATA 0x1A2c

During OSD debug mode (VIU_OSD1_CTRL_STAT.TEST_RD_EN = 1), the output pixels will be presented at this register.

Bit(s)	R/W	Default	Description
31-24	R	0	Y or R.
23:16	R	0	Cb or G.
15-8	R	0	Cr or B.
7-0	R	0	Alpha[8:1].

Table 10-2421 VIU_OSD1_PROT_CTRL 0x1a2e

Bit(s)	R/W	Default	Description
31:16	R/W	0	urgent_ctrl : // unsigned , default =0
15	R.O	0	prot_en : // unsigned , default =0; 1=Borrow PROT's FIFO storage, either for rotate or non-rotate.
12: 0	R.O	0	prot_fifo_size : // unsigned , default =0; effective FIFO size when prot_en=1.

Table 10-2422 VIU_OSD1_MALI_UNPACK_CTRL 0x1a2f

Bit(s)	R/W	Default	Description
31	R/W	0	mali_unpack_en 1: OSD will unpack mali_src 0: OSD will unpack normal src
28			Alpha_div_en: alpha dividor enable
27:26			Alpha_dividor gating clk
25:24			Alpa_mapping_mode In osd,this bit should be set 0 when Alpha_div_en active, means 8 bits alpha mode
17	/	/	/
16	R/W	0	afbcd_swap_64bit:
15: 12	R/W	1	afbcd_r_reorder,change osd output order when use mali src: 1: r_re = r ; 2: r_re = g; 3: r_re = b; 4: r_re = a;

Amlogic Proprietary and Confidential
Copyright © Amlogic. All rights reserved.

Bit(s)	R/W	Default	Description
			default: r_re = 0;
11: 8		2	afbcd_r_reorder,change osd output order when use mali src: 1: g_re = r ; 2: g_re = g; 3: g_re = b; 4: g_re = a; default: r_re = 0;
7: 4		3	afbcd_r_reorder,change osd output order when use mali src: 1: b_re = r ; 2: b_re = g; 3: b_re = b; 4: b_re = a; default: r_re = 0;
3: 0		4	afbcd_r_reorder,change osd output order when use mali src: 1: a_re = r ; 2: a_re = g; 3: a_re = b; 4: a_re = a; default: r_re = 0;

Table 10-2423 VIU_OSD1_DIMM_CTRL 0x1adf

Bit(s)	R/W	Default	Description
30	R/W	0	OSD dimm enable,osd out will be one color when this bit active
29:0	R/W	0	Osd_dim_rgb_out ,osd out will be this value when bit30 active

10.2.3.31 OSD2 Registers

VIU_OSD2_CTRL_STAT 0x1a30

See□VIU_OSD1_CTRL_STAT

VIU_OSD2_CTRL_STAT2 0x1a4d

See□VIU_OSD1_CTRL_STAT2

VIU_OSD2_COLOR_ADDR 0x1a31

See□VIU_OSD1_COLOR_ADDR

VIU_OSD2_COLOR 0x1a32

See□VIU_OSD1_COLOR

VIU_OSD2_TCOLOR_AG0 0x1a37

See□VIU_OSD1_TCOLOR_AG0

VIU_OSD2_TCOLOR_AG1 0x1a38

Amlogic Proprietary and Confidential
Copyright © Amlogic. All rights reserved.

See VIU_OSD1_TCOLOR_AG1
VIU_OSD2_TCOLOR_AG2 0x1a39

See VIU_OSD1_TCOLOR_AG02
VIU_OSD2_TCOLOR_AG3 0x1a3a

See VIU_OSD1_TCOLOR_AG3

VIU_OSD2_BLK0_CFG_W0 0x1a3b

See VIU_OSD1_BLK0_CFG_W0
VIU_OSD2_BLK0_CFG_W1 0x1a3c

See VIU_OSD1_BLK0_CFG_W1
VIU_OSD2_BLK0_CFG_W2 0x1a3d

See VIU_OSD1_BLK0_CFG_W2
VIU_OSD2_BLK0_CFG_W3 0x1a3e
See VIU_OSD1_BLK0_CFG_W3
VIU_OSD2_BLK0_CFG_W4 0x1a64
See: VIU_OSD1_BLK0_CFG_W4
VIU_OSD2_BLK1_CFG_W4 0x1a65
See: VIU_OSD2_BLK1_CFG_W4
VIU_OSD2_BLK2_CFG_W4 0x1a66
See: VIU_OSD1_BLK2_CFG_W4

VIU_OSD2_FIFO_CTRL_STAT 0x1a4b
See: VIU_OSD1_FIFO_CTRL_STAT
VIU_OSD2_TEST_RDDATA 0x1a4c
See: VIU_OSD1_TEST_RDDATA
VIU_OSD2_PROT_CTRL 0x1a4e
See: VIU_OSD1_PROT_CTRL

VIU_OSD2_MALI_UNPACK_CTRL 0x1abd
See: VIU_OSD1_MALI_UNPACK_CTRL
VIU_OSD2_DIMM_CTRL 0x1acf
See: VIU_OSD1_DIMM_CTRL

Amlogic Proprietary and Confidential
Copyright © Amlogic. All rights reserved.

10.2.3.32 OSD3 Registers

VIU_OSD3_CTRL_STAT 0x3d80

See VIU_OSD1_CTRL_STAT

VIU_OSD3_CTRL_STAT2 0x3d81

See VIU_OSD1_CTRL_STAT2

VIU_OSD3_COLOR_ADDR 0x3d82

See VIU_OSD1_COLOR_ADDR

VIU_OSD3_COLOR 0x3d83

See VIU_OSD1_COLOR

VIU_OSD3_TCOLOR_AG0 0x3d84

See VIU_OSD1_TCOLOR_AG0

VIU_OSD3_TCOLOR_AG1 0x3d85

See VIU_OSD1_TCOLOR_AG1

VIU_OSD3_TCOLOR_AG2 0x3d86

See VIU_OSD1_TCOLOR_AG02

VIU_OSD3_TCOLOR_AG3 0x3d87

See VIU_OSD1_TCOLOR_AG3

VIU_OSD3_BLK0_CFG_W0 0x3d88

See VIU_OSD1_BLK0_CFG_W0

VIU_OSD3_BLK0_CFG_W1 0x3d8c

See VIU_OSD1_BLK0_CFG_W1

VIU_OSD3_BLK0_CFG_W2 0x3d90

See VIU_OSD1_BLK0_CFG_W2

VIU_OSD3_BLK0_CFG_W3 0x3d94

See VIU_OSD1_BLK0_CFG_W3

VIU_OSD3_BLK0_CFG_W4 0x3d98

Amlogic Proprietary and Confidential
Copyright © Amlogic. All rights reserved.

See: VIU_OSD1_BLK0_CFG_W4

VIU_OSD3_BLK1_CFG_W4 0x3d99

See: VIU_OSD3_BLK1_CFG_W4

VIU_OSD3_BLK2_CFG_W4 0x3d9a

See: VIU_OSD1_BLK2_CFG_W4

VIU_OSD3_FIFO_CTRL_STAT 0x3d9c

See: VIU_OSD1_FIFO_CTRL_STAT

VIU_OSD3_TEST_RDDATA 0x3d9d

See: VIU_OSD1_TEST_RDDATA

VIU_OSD3_PROT_CTRL 0x3d9e

See: VIU_OSD1_PROT_CTRL

VIU_OSD3_MALI_UNPACK_CTRL 0x3d9f

See: VIU_OSD1_MALI_UNPACK_CTRL

VIU_OSD3_DIMM_CTRL 0x3da0

See: VIU_OSD1_DIMM_CTRL

10.2.3.33 OSD4 Registers

VIU_OSD4_CTRL_STAT 0x3dc0

See□VIU_OSD1_CTRL_STAT

VIU_OSD4_CTRL_STAT2 0x3dc1

See□VIU_OSD1_CTRL_STAT2

VIU_OSD4_COLOR_ADDR 0x3dc2

See□VIU_OSD1_COLOR_ADDR

VIU_OSD4_COLOR 0x3dc3

See□VIU_OSD1_COLOR

VIU_OSD4_TCOLOR_AG0 0x3dc4

See□VIU_OSD1_TCOLOR_AG0

VIU_OSD4_TCOLOR_AG1 0x3dc5

See□VIU_OSD1_TCOLOR_AG1

VIU_OSD4_TCOLOR_AG2 0x3dc6

Amlogic Proprietary and Confidential
Copyright © Amlogic. All rights reserved.

See VIU_OSD1_TCOLOR_AG02

VIU_OSD4_TCOLOR_AG3 0x3dc7

See VIU_OSD1_TCOLOR_AG3

VIU_OSD4_BLK0_CFG_W0 0x3dc8

See VIU_OSD1_BLK0_CFG_W0

VIU_OSD4_BLK0_CFG_W1 0x3dcc

See VIU_OSD1_BLK0_CFG_W1

VIU_OSD4_BLK0_CFG_W2 0x3dd0

See VIU_OSD1_BLK0_CFG_W2

VIU_OSD4_BLK0_CFG_W3 0x3dd4

See VIU_OSD1_BLK0_CFG_W3

VIU_OSD4_BLK0_CFG_W4 0x3dd8

See: VIU_OSD1_BLK0_CFG_W4

VIU_OSD4_BLK1_CFG_W4 0x3dd9

See: VIU_OSD3_BLK1_CFG_W4

VIU_OSD4_BLK2_CFG_W4 0x3dda

See: VIU_OSD1_BLK2_CFG_W4

VIU_OSD4_FIFO_CTRL_STAT 0x3ddc

See: VIU_OSD1_FIFO_CTRL_STAT

VIU_OSD4_TEST_RDDATA 0x3ddd

See: VIU_OSD1_TEST_RDDATA

VIU_OSD4_PROT_CTRL 0x3dde

See: VIU_OSD1_PROT_CTRL

VIU_OSD4_MALI_UNPACK_CTRL 0x3ddf

See: VIU_OSD1_MALI_UNPACK_CTRL

VIU_OSD4_DIMM_CTRL 0x3de0

See: VIU_OSD1_DIMM_CTRL

Amlogic Proprietary and Confidential
Copyright © Amlogic. All rights reserved.

10.2.3.34 VPP_VD1_MATRIX Registers

Table 10-2424 VPP_VD1_MATRIX_COEF00_01 0x3290

Bit(s)	R/W	Default	Description
28-16	R/W	0	Coefficient00, signed, 3.10
12-0	R/W	0	Coefficient01, signed, 3.10

Table 10-2425 VPP_VD1_MATRIX_COEF02_10 0x3291

Bit(s)	R/W	Default	Description
28-16	R/W	0	Coefficient02, signed, 3.10
12-0	R/W	0	Coefficient10, signed, 3.10

Table 10-2426 VPP_VD1_MATRIX_COEF11_12 0x3292

Bit(s)	R/W	Default	Description
28-16	R/W	0	Coefficient11, signed, 3.10
12-0	R/W	0	Coefficient12, signed, 3.10

Table 10-2427 VPP_VD1_MATRIX_COEF20_21 0x3293

Bit(s)	R/W	Default	Description
28-16	R/W	0	Coefficient20, signed, 3.10
12-0	R/W	0	Coefficient21, signed, 3.10

Table 10-2428 VPP_VD1_MATRIX_COEF22 0x3294

Bit(s)	R/W	Default	Description
18-16	R/W	0	convrs
12-0	R/W	0	Coefficient22, signed, 3.10

Table 10-2429 VPP_VD1_MATRIX_COEF13_14 0x3295

Bit(s)	R/W	Default	Description
28-16	R/W	0	Coefficient13, signed, 3.10
12-0	R/W	0	Coefficient14, signed, 3.10

Table 10-2430 VPP_VD1_MATRIX_COEF23_24 0x3296

Bit(s)	R/W	Default	Description
28-16	R/W	0	Coefficient23, signed, 3.10
12-0	R/W	0	Coefficient24, signed, 3.10

Amlogic Proprietary and Confidential
Copyright © Amlogic. All rights reserved.

Table 10-2431 VPP_VD1_MATRIX_COEF15_25 0x3297

Bit(s)	R/W	Default	Description
28-16	R/W	0	Coefficient15, signed, 3.10
12-0	R/W	0	Coefficient25, signed, 3.10

Table 10-2432 VPP_VD1_MATRIX_CLIP 0x3298

Bit(s)	R/W	Default	Description
31-8	R/W	0x0	reserved
7-5	R/W	0x1	Matrix rs
4-3	R/W	0x10	Matrix clmod 0: only 3x3, 1: pre_offseted_ch1,ch2> pre_offseted_ch0, use the added 2x3 coef 2: pre_offseted_ch1,ch2 > 0, use the added 2x3 coef 3: pre_offseted_ch1,ch2 > 512, use the added 2x3 coef
2-0	R/W	0x10	/

Table 10-2433 VPP_VD1_MATRIX_OFFSET0_1 0x3299

Bit(s)	R/W	Default	Description
27-16	R/W	0	Offset0, signed value
11-0	R/W	0	Offset1, signed value

Table 10-2434 VPP_VD1_MATRIX_OFFSET2 0x329a

Bit(s)	R/W	Default	Description
11-0	R/W	0	Offset2, signed value

Table 10-2435 VPP_VD1_MATRIX_PRE_OFFSET0_1 0x329b

Bit(s)	R/W	Default	Description
27-16	R/W	0	pre_Offset0, signed value
11-0	R/W	0	Pre_Offset1, signed value

Table 10-2436 VPP_VD1_MATRIX_PRE_OFFSET2 0x329c

Bit(s)	R/W	Default	Description
11-0	R/W	0	Pre_Offset2, signed value

Amlogic Proprietary and Confidential
Copyright © Amlogic. All rights reserved.

Table 10-2437 VPP_VD1_MATRIX_EN_CTRL 0x329d

Bit(s)	R/W	Default	Description
5:4	R/W	0	Gate clock ctrl //matrix gating clock ctrl 1x:free clk 00:gating clk 01:close clk
1	R/W	0	Enable_sync_sel //matrix enable sync signal 1:enable sync by vsync 0:enable active directly
0	R/W	0	Conv_en_pre //matrix enable signal ,active high

10.2.3.35 VPP_POST_MATRIX Registers

VPP_POST_MATRIX_COEF00_01 0x32b0

See: VPP_VD1_MATRIX_COEF00_01

VPP_POST_MATRIX_COEF02_10 0x32b1

See: VPP_VD1_MATRIX_COEF02_10

VPP_POST_MATRIX_COEF11_12 0x32b2

See: VPP_VD1_MATRIX_COEF11_12

VPP_POST_MATRIX_COEF20_21 0x32b3

See: VPP_VD1_MATRIX_COEF20_21

VPP_POST_MATRIX_COEF22 0x32b4

See: VPP_VD1_MATRIX_COEF22

VPP_POST_MATRIX_COEF13_14 0x32b5

See: VPP_VD1_MATRIX_COEF13_14

VPP_POST_MATRIX_COEF23_24 0x32b6

See: VPP_VD1_MATRIX_COEF23_24

VPP_POST_MATRIX_COEF15_25 0x32b7

See: VPP_VD1_MATRIX_COEF15_25

VPP_POST_MATRIX_CLIP 0x32b8

See: VPP_VD1_MATRIX_CLIP

VPP_POST_MATRIX_OFFSET0_1 0x32b9

See: VPP_VD1_MATRIX_OFFSET0_1

VPP_POST_MATRIX_OFFSET2 0x32ba

See: VPP_VD1_MATRIX_OFFSET2

VPP_POST_MATRIX_PRE_OFFSET0_1 0x32bb

See: VPP_VD1_MATRIX_PRE_OFFSET0_1

VPP_POST_MATRIX_PRE_OFFSET2 0x32bc

See: VPP_VD1_MATRIX_PRE_OFFSET2

Amlogic Proprietary and Confidential
Copyright © Amlogic. All rights reserved.

VPP_POST_MATRIX_EN_CTRL 0x32bd

See: VPP_VD1_MATRIX_EN_CTRL

Table 10-2438 VPP_POST_MATRIX_SAT 0x32c1

Bit(s)	R/W	Default	Description
2	R/W	0	sat_o_en:If true, the output result of post matrix output is saturated
1	R/W	0	sat_i_en:If true, the input result of post matrix output is saturated
0	R/W	0	misc_sat_en: same as sat_i_en

10.2.3.36 VPP_POST2_MATRIX Registers

VPP_POST2_MATRIX_COEF00_01 0x39a0

See: VPP_VD1_MATRIX_COEF00_01

VPP_POST2_MATRIX_COEF02_10 0x39a1

See: VPP_VD1_MATRIX_COEF02_10

VPP_POST2_MATRIX_COEF11_12 0x39a2

See: VPP_VD1_MATRIX_COEF11_12

VPP_POST2_MATRIX_COEF20_21 0x39a3

See: VPP_VD1_MATRIX_COEF20_21

VPP_POST2_MATRIX_COEF22 0x39a4

See: VPP_VD1_MATRIX_COEF22

VPP_POST2_MATRIX_COEF13_14 0x39a5

See: VPP_VD1_MATRIX_COEF13_14

VPP_POST2_MATRIX_COEF23_24 0x39a6

See: VPP_VD1_MATRIX_COEF23_24

VPP_POST2_MATRIX_COEF15_25 0x39a7

See: VPP_VD1_MATRIX_COEF15_25

VPP_POST2_MATRIX_CLIP 0x39a8

See: VPP_VD1_MATRIX_CLIP

VPP_POST2_MATRIX_OFFSET0_1 0x39a9

See: VPP_VD1_MATRIX_OFFSET0_1

VPP_POST2_MATRIX_OFFSET2 0x39aa

See: VPP_VD1_MATRIX_OFFSET2

VPP_POST2_MATRIX_PRE_OFFSET0_1 0x39ab

See: VPP_VD1_MATRIX_PRE_OFFSET0_1

Amlogic Proprietary and Confidential
Copyright © Amlogic. All rights reserved.

VPP_POST2_MATRIX_PRE_OFFSET2 0x39ac
See: VPP_VD1_MATRIX_PRE_OFFSET2

VPP_POST2_MATRIX_EN_CTRL 0x39ad
See: VPP_VD1_MATRIX_EN_CTRL

10.2.3.37 VPP_OSD2_MATRIX Registers

VPP_OSD2_MATRIX_COEF00_01 0x3920
See: VPP_VD1_MATRIX_COEF00_01
VPP_OSD2_MATRIX_COEF02_10 0x3921
See: VPP_VD1_MATRIX_COEF02_10
VPP_OSD2_MATRIX_COEF11_12 0x3922
See: VPP_VD1_MATRIX_COEF11_12
VPP_OSD2_MATRIX_COEF20_21 0x3923
See: VPP_VD1_MATRIX_COEF20_21
VPP_OSD2_MATRIX_COEF22 0x3924
See: VPP_VD1_MATRIX_COEF22
VPP_OSD2_MATRIX_COEF13_14 0x3925
See: VPP_VD1_MATRIX_COEF13_14
VPP_OSD2_MATRIX_COEF23_24 0x3926
See: VPP_VD1_MATRIX_COEF23_24
VPP_OSD2_MATRIX_COEF15_25 0x3927
See: VPP_VD1_MATRIX_COEF15_25
VPP_OSD2_MATRIX_CLIP 0x3928
See: VPP_VD1_MATRIX_CLIP
VPP_OSD2_MATRIX_OFFSET0_1 0x3929
See: VPP_VD1_MATRIX_OFFSET0_1

VPP_OSD2_MATRIX_OFFSET2 0x392a
See: VPP_VD1_MATRIX_OFFSET2

VPP_OSD2_MATRIX_PRE_OFFSET0_1 0x392b
See: VPP_VD1_MATRIX_PRE_OFFSET0_1

VPP_OSD2_MATRIX_PRE_OFFSET2 0x392c
See: VPP_VD1_MATRIX_PRE_OFFSET2

Amlogic Proprietary and Confidential
Copyright © Amlogic. All rights reserved.

VPP_OSD2_MATRIX_EN_CTRL 0x392d

See: VPP_VD1_MATRIX_EN_CTRL

10.2.3.38 VPP_WRAP_OSD1_MATRIX Registers

VPP_WRAP_OSD1_MATRIX_COEF00_01 0x3d60

See: VPP_VD1_MATRIX_COEF00_01

VPP_WRAP_OSD1_MATRIX_COEF02_10 0x3d61

See: VPP_VD1_MATRIX_COEF02_10

VPP_WRAP_OSD1_MATRIX_COEF11_12 0x3d62

See: VPP_VD1_MATRIX_COEF11_12

VPP_WRAP_OSD1_MATRIX_COEF20_21 0x3d63

See: VPP_VD1_MATRIX_COEF20_21

VPP_WRAP_OSD1_MATRIX_COEF22 0x3d64

See: VPP_VD1_MATRIX_COEF22

VPP_WRAP_OSD1_MATRIX_COEF13_14 0x3d65

See: VPP_VD1_MATRIX_COEF13_14

VPP_WRAP_OSD1_MATRIX_COEF23_24 0x3d66

See: VPP_VD1_MATRIX_COEF23_24

VPP_WRAP_OSD1_MATRIX_COEF15_25 0x3d67

See: VPP_VD1_MATRIX_COEF15_25

VPP_WRAP_OSD1_MATRIX_CLIP 0x3d68

See: VPP_VD1_MATRIX_CLIP

VPP_WRAP_OSD1_MATRIX_OFFSET0_1 0x3d69

See: VPP_VD1_MATRIX_OFFSET0_1

VPP_WRAP_OSD1_MATRIX_OFFSET2 0x3d6a

See: VPP_VD1_MATRIX_OFFSET2

VPP_WRAP_OSD1_MATRIX_PRE_OFFSET0_1 0x3d6b

See: VPP_VD1_MATRIX_PRE_OFFSET0_1

VPP_WRAP_OSD1_MATRIX_PRE_OFFSET2 0x3d6c

See: VPP_VD1_MATRIX_PRE_OFFSET2

VPP_WRAP_OSD1_MATRIX_EN_CTRL 0x3d6d

See: VPP_VD1_MATRIX_EN_CTRL

Amlogic Proprietary and Confidential
Copyright © Amlogic. All rights reserved.

10.2.3.39 VPP_WRAP_OSD2_MATRIX Registers

VPP_WRAP_OSD2_MATRIX_COEF00_01 0x3d70

See: VPP_VD1_MATRIX_COEF00_01

VPP_WRAP_OSD2_MATRIX_COEF02_10 0x3d71

See: VPP_VD1_MATRIX_COEF02_10

VPP_WRAP_OSD2_MATRIX_COEF11_12 0x3d72

See: VPP_VD1_MATRIX_COEF11_12

VPP_WRAP_OSD2_MATRIX_COEF20_21 0x3d73

See: VPP_VD1_MATRIX_COEF20_21

VPP_WRAP_OSD2_MATRIX_COEF22 0x3d74

See: VPP_VD1_MATRIX_COEF22

VPP_WRAP_OSD2_MATRIX_COEF13_14 0x3d75

See: VPP_VD1_MATRIX_COEF13_14

VPP_WRAP_OSD2_MATRIX_COEF23_24 0x3d76

See: VPP_VD1_MATRIX_COEF23_24

VPP_WRAP_OSD2_MATRIX_COEF15_25 0x3d77

See: VPP_VD1_MATRIX_COEF15_25

VPP_WRAP_OSD2_MATRIX_CLIP 0x3d78

See: VPP_VD1_MATRIX_CLIP

VPP_WRAP_OSD2_MATRIX_OFFSET0_1 0x3d79

See: VPP_VD1_MATRIX_OFFSET0_1

VPP_WRAP_OSD2_MATRIX_OFFSET2 0x3d7a

See: VPP_VD1_MATRIX_OFFSET2

VPP_WRAP_OSD2_MATRIX_PRE_OFFSET0_1 0x3d7b

See: VPP_VD1_MATRIX_PRE_OFFSET0_1

VPP_WRAP_OSD2_MATRIX_PRE_OFFSET2 0x3d7c

See: VPP_VD1_MATRIX_PRE_OFFSET2

VPP_WRAP_OSD2_MATRIX_EN_CTRL 0x3d7d

See: VPP_VD1_MATRIX_EN_CTRL

10.2.3.40 VPP_WRAP_OSD3_MATRIX Registers

VPP_WRAP_OSD3_MATRIX_COEF00_01 0x3db0

See: VPP_VD1_MATRIX_COEF00_01

Amlogic Proprietary and Confidential
Copyright © Amlogic. All rights reserved.

VPP_WRAP_OSD3_MATRIX_COEF02_10 0x3db1

See: VPP_VD1_MATRIX_COEF02_10

VPP_WRAP_OSD3_MATRIX_COEF11_12 0x3db2

See: VPP_VD1_MATRIX_COEF11_12

VPP_WRAP_OSD3_MATRIX_COEF20_21 0x3db3

See: VPP_VD1_MATRIX_COEF20_21

VPP_WRAP_OSD3_MATRIX_COEF22 0x3db4

See: VPP_VD1_MATRIX_COEF22

VPP_WRAP_OSD3_MATRIX_COEF13_14 0x3db5

See: VPP_VD1_MATRIX_COEF13_14

VPP_WRAP_OSD3_MATRIX_COEF23_24 0x3db6

See: VPP_VD1_MATRIX_COEF23_24

VPP_WRAP_OSD3_MATRIX_COEF15_25 0x3db7

See: VPP_VD1_MATRIX_COEF15_25

VPP_WRAP_OSD3_MATRIX_CLIP 0x3db8

See: VPP_VD1_MATRIX_CLIP

VPP_WRAP_OSD3_MATRIX_OFFSET0_1 0x3db9

See: VPP_VD1_MATRIX_OFFSET0_1

VPP_WRAP_OSD3_MATRIX_OFFSET2 0x3dba

See: VPP_VD1_MATRIX_OFFSET2

VPP_WRAP_OSD3_MATRIX_PRE_OFFSET0_1 0x3dbb

See: VPP_VD1_MATRIX_PRE_OFFSET0_1

VPP_WRAP_OSD3_MATRIX_PRE_OFFSET2 0x3dbc

See: VPP_VD1_MATRIX_PRE_OFFSET2

VPP_WRAP_OSD3_MATRIX_EN_CTRL 0x3dbd

See: VPP_VD1_MATRIX_EN_CTRL

10.2.3.41 HDR Registers

Table 10-2439 VDIN0_HDR2_CTRL 0x1280

Bit(s)	R/W	Default	Description
20:18	R/W	0	reg_din_swap : // unsigned , default = 0
17	R/W	0	reg_out_fmt : // unsigned , default = 0
16	R/W	0	reg_only_mat : // unsigned , default = 0 ,only use input matrix ,work when hdr disable

Amlogic Proprietary and Confidential
Copyright © Amlogic. All rights reserved.

Bit(s)	R/W	Default	Description
15	R/W	0	mat_o_en,//output matrix enable ,only work when hdr enable
14	R/W	0	mat_in_en //input matrix enable ,only work when hdr enable
13	R/W	0	reg_VDIN0_HDR2_top_en : // unsigned , default = 0,hdr enable signal
12	R/W	1	reg_cgain_mode : // unsigned , default = 1
7: 6	R/W	1	reg_gmut_mode : // unsigned , default = 1
5	R/W	0	reg_in_shift : // unsigned , default = 0
4	R/W	1	reg_in_fmt : // unsigned , default = 1
3	R/W	1	reg_eo_enable : // unsigned , default = 1
2	R/W	1	reg_oe_enable : // unsigned , default = 1
1	R/W	1	reg_ogain_enable : // unsigned , default = 1
0	R/W	1	reg_cgain_enable : // unsigned , default = 1

Table 10-2440 VDIN0_HDR2_CLK_GATE 0x1281

Bit(s)	R/W	Default	Description
31:30	R/W	0	clk_tm : gate clock ctrl (main clock) // unsigned , default = 0
29:28	R/W	0	output : matrix clock gate ctrl // unsigned , default = 0
25:24	R/W	0	input : matrix clock gate ctrl // unsigned , default = 0
23:22	R/W	0	hdr : top cbus clock gate ctrl // unsigned , default = 0
21:20	R/W	0	eotf : cbus clock gate ctrl // unsigned , default = 0
19:18	R/W	0	oetf : cbus clock gate ctrl // unsigned , default = 0
17:16	R/W	0	gamma : mult cbus clock gate ctrl // unsigned , default = 0
15:14	R/W	0	adaptive : cbus scaler clock gate ctrl // unsigned , default = 0
13:12	R/W	0	cgain : cbus clock gate ctrl // unsigned , default = 0
11:10	R/W	0	eotf : clock gate ctrl // unsigned , default = 0
9:8	R/W	0	oetf : clock gate ctrl // unsigned , default = 0
7:6	R/W	0	gamma : mult clock gate ctrl // unsigned , default = 0
5:4	R/W	0	adaptive : scaler clock gate ctrl // unsigned , default = 0
3:2	R/W	0	uv : gain clock gate ctrl // unsigned , default = 0
1:0	R/W	0	cgain : clock gate ctrl // unsigned , default = 0

Table 10-2441 VDIN0_HDR2_MATRIXI_COEF00_01 0x1282

Bit(s)	R/W	Default	Description
28:16	R/W	0	coef00 : // signed , default = 0
12:0	R/W	0	coef01 : // signed , default = 0

Amlogic Proprietary and Confidential
Copyright © Amlogic. All rights reserved.

Table 10-2442 VDIN0_HDR2_MATRIXI_COEF02_10 0x1283

Bit(s)	R/W	Default	Description
28:16	R/W	0	coef02 : // signed , default = 0
12:0	R/W	0	coef10 : // signed , default = 0

Table 10-2443 VDIN0_HDR2_MATRIXI_COEF11_12 0x1284

Bit(s)	R/W	Default	Description
28:16	R/W	0	coef11 : // signed , default = 0
12:0	R/W	0	coef12 : // signed , default = 0

Table 10-2444 VDIN0_HDR2_MATRIXI_COEF20_21 0x1285

Bit(s)	R/W	Default	Description
28:16	R/W	0	coef20 : // signed , default = 0
12:0	R/W	0	coef21 : // signed , default = 0

Table 10-2445 VDIN0_HDR2_MATRIXI_COEF22 0x1286

Bit(s)	R/W	Default	Description
12:0	R/W	0	coef22 : // signed , default = 0

Table 10-2446 VDIN0_HDR2_MATRIXI_COEF30_31 0x1287

Bit(s)	R/W	Default	Description
28:16	R/W	0	coef13 : // signed , default = 0
12:0	R/W	0	coef14 : // signed , default = 0

Table 10-2447 VDIN0_HDR2_MATRIXI_COEF32_40 0x1288

Bit(s)	R/W	Default	Description
28:16	R/W	0	coef23 : // signed , default = 0
12:0	R/W	0	coef24 : // signed , default = 0

Table 10-2448 VDIN0_HDR2_MATRIXI_COEF41_42 0x1289

Bit(s)	R/W	Default	Description
28:16	R/W	0	coef15 : // signed , default = 0
12:0	R/W	0	coef25 : // signed , default = 0

Amlogic Proprietary and Confidential
Copyright © Amlogic. All rights reserved.

Table 10-2449 VDIN0_HDR2_MATRIXI_OFFSET0_1 0x128A

Bit(s)	R/W	Default	Description
26:16	R/W	0	offset0 : // signed , default = 0
10:0	R/W	0	offset1 : // signed , default = 0

Table 10-2450 VDIN0_HDR2_MATRIXI_OFFSET2 0x128B

Bit(s)	R/W	Default	Description
10:0	R/W	0	offset2 : // signed , default = 0

Table 10-2451 VDIN0_HDR2_MATRIXI_PRE_OFFSET0_1 0x128C

Bit(s)	R/W	Default	Description
26:16	R/W	0	pre_offset0 : // signed , default = 0
10:0	R/W	0	pre_offset1 : // signed , default = 0

Table 10-2452 VDIN0_HDR2_MATRIXI_PRE_OFFSET2 0x128D

Bit(s)	R/W	Default	Description
10:0	R/W	0	pre_offset2 : // signed , default = 0

Table 10-2453 VDIN0_HDR2_MATRIXO_COEF00_01 0x128E

Bit(s)	R/W	Default	Description
28:16	R/W	0	coef00 : // signed , default = 0
12:0	R/W	0	coef01 : // signed , default = 0

Table 10-2454 VDIN0_HDR2_MATRIXO_COEF02_10 0x128F

Bit(s)	R/W	Default	Description
28:16	R/W	0	coef02 : // signed , default = 0
12:0	R/W	0	coef10 : // signed , default = 0

Table 10-2455 VDIN0_HDR2_MATRIXO_COEF11_12 0x1290

Bit(s)	R/W	Default	Description
28:16	R/W	0	coef11 : // signed , default = 0
12:0	R/W	0	coef12 : // signed , default = 0

Amlogic Proprietary and Confidential
Copyright © Amlogic. All rights reserved.

Table 10-2456 VDIN0_HDR2_MATRIXO_COEF20_21 0x1291

Bit(s)	R/W	Default	Description
28:16	R/W	0	coef20 : // signed , default = 0
12:0	R/W	0	coef21 : // signed , default = 0

Table 10-2457 VDIN0_HDR2_MATRIXO_COEF22 0x1292

Bit(s)	R/W	Default	Description
12:0	R/W	0	coef22 : // signed , default = 0

Table 10-2458 VDIN0_HDR2_MATRIXO_COEF30_31 0x1293

Bit(s)	R/W	Default	Description
28:16	R/W	0	coef13 : // signed , default = 0
12:0	R/W	0	coef14 : // signed , default = 0

Table 10-2459 VDIN0_HDR2_MATRIXO_COEF32_40 0x1294

Bit(s)	R/W	Default	Description
28:16	R/W	0	coef23 : // signed , default = 0
12:0	R/W	0	coef24 : // signed , default = 0

Table 10-2460 VDIN0_HDR2_MATRIXO_COEF41_42 0x1295

Bit(s)	R/W	Default	Description
28:16	R/W	0	coef15 : // signed , default = 0
12:0	R/W	0	coef25 : // signed , default = 0

Table 10-2461 VDIN0_HDR2_MATRIXO_OFFSET0_1 0x1296

Bit(s)	R/W	Default	Description
26:16	R/W	0	offset0 : // signed , default = 0
10:0	R/W	0	offset1 : // signed , default = 0

Table 10-2462 VDIN0_HDR2_MATRIXO_OFFSET2 0x1297

Bit(s)	R/W	Default	Description
10:0	R/W	0	offset2 : // signed , default = 0

Amlogic Proprietary and Confidential
Copyright © Amlogic. All rights reserved.

Table 10-2463 VDIN0_HDR2_MATRIXO_PRE_OFFSET0_1 0x1298

Bit(s)	R/W	Default	Description
26:16	R/W	0	pre_offset0 : // signed , default = 0
10:0	R/W	0	pre_offset1 : // signed , default = 0

Table 10-2464 VDIN0_HDR2_MATRIXO_PRE_OFFSET2 0x1299

Bit(s)	R/W	Default	Description
10:0	R/W	0	pre_offset2 : // signed , default = 0

Table 10-2465 VDIN0_HDR2_MATRIXI_CLIP 0x129A

Bit(s)	R/W	Default	Description
19:8	R/W	0	comp_th : // unsigned , default = 0
7:5	R/W	0	conv_rs : // unsigned , default = 0
4:3	R/W	0	clmod : // unsigned , default = 0

Table 10-2466 VDIN0_HDR2_MATRIXO_CLIP 0x129B

Bit(s)	R/W	Default	Description
19:8	R/W	0	comp_th : // unsigned , default = 0
7:5	R/W	0	conv_rs : // unsigned , default = 0
4:3	R/W	0	clmod : // unsigned , default = 0

Table 10-2467 VDIN0_HDR2_CGAIN_OFFT 0x129C

Bit(s)	R/W	Default	Description
26:16	R/W	0	reg_cgain_oft2 : // signed , default = 0
10:0	R/W	0	reg_cgain_oft1 : // signed , default = 0

Table 10-2468 VDIN0_EOTF_LUT_ADDR_PORT 0x129E

Bit(s)	R/W	Default	Description
7:0	R/W	0	eotf_lut_addr : // unsigned , default = 0

Table 10-2469 VDIN0_EOTF_LUT_DATA_PORT 0x129F

Bit(s)	R/W	Default	Description
19:0	R/W	0	eotf_lut_data : // unsigned , default = 0

Amlogic Proprietary and Confidential
Copyright © Amlogic. All rights reserved.

Table 10-2470 VDIN0_OETF_LUT_ADDR_PORT 0x12A0

Bit(s)	R/W	Default	Description
7:0	R/W	0	oetf_lut_addr : // unsigned , default = 0

Table 10-2471 VDIN0_OETF_LUT_DATA_PORT 0x12A1

Bit(s)	R/W	Default	Description
11:0	R/W	0	oetf_lut_data : // unsigned , default = 0

Table 10-2472 VDIN0_CGAIN_LUT_ADDR_PORT 0x12A2

Bit(s)	R/W	Default	Description
7:0	R/W	0	cgain_lut_addr : // unsigned , default = 0

Table 10-2473 VDIN0_CGAIN_LUT_DATA_PORT 0x12A3

Bit(s)	R/W	Default	Description
11:0	R/W	0	cgain_lut_data : // unsigned , default = 0

Table 10-2474 VDIN0_HDR2_CGAIN_COEF0 0x12A4

Bit(s)	R/W	Default	Description
27:16	R/W	0	reg_cgain_coef1 : // unsigned , default = 0
11:0	R/W	0	reg_cgain_coef0 : //unsigned , default = 0

Table 10-2475 VDIN0_HDR2_CGAIN_COEF1 0x12A5

Bit(s)	R/W	Default	Description
11:0	R/W	0	reg_cgain_coef2 : // unsigned , default = 0

Table 10-2476 VDIN0_OGAIN_LUT_ADDR_PORT 0x12A6

Bit(s)	R/W	Default	Description
7:0	R/W	0	ogain_lut_addr : // unsigned , default = 0

Table 10-2477 VDIN0_OGAIN_LUT_DATA_PORT 0x12A7

Bit(s)	R/W	Default	Description
11:0	R/W	0	ogain_lut_data : // unsigned , default = 0

Amlogic Proprietary and Confidential
Copyright © Amlogic. All rights reserved.

Table 10-2478 VDIN0_HDR2_ADPS_CTRL 0x12A8

Bit(s)	R/W	Default	Description
6	R/W	1	reg_adpscl_bypass2 : // unsigned , default = 1
5	R/W	1	reg_adpscl_bypass1 : // unsigned , default = 1
4	R/W	1	reg_adpscl_bypass0 : // unsigned , default = 1
1:0	R/W	1	reg_adpscl_mode : // unsigned , default = 1

Table 10-2479 VDIN0_HDR2_ADPS_ALPHA0 0x12A9

Bit(s)	R/W	Default	Description
29:16	R/W	0x1000	reg_adpscl_alpha1 : // unsigned , default = 0x1000
13:0	R/W	0x1000	reg_adpscl_alpha0 : // unsigned , default = 0x1000

Table 10-2480 VDIN0_HDR2_ADPS_ALPHA1 0x12AA

Bit(s)	R/W	Default	Description
27:24	R/W	0xc	reg_adpscl_shift0 : // unsigned , default = 0xc
23:20	R/W	0xc	reg_adpscl_shift1 : // unsigned , default = 0xc
19:16	R/W	0xc	reg_adpscl_shift2 : // unsigned , default = 0xc
13:0	R/W	0x1000	reg_adpscl_alpha2 : // unsigned , default = 0x1000

Table 10-2481 VDIN0_HDR2_ADPS_BETA0 0x12AB

Bit(s)	R/W	Default	Description
20	R/W	0	reg_adpscl_beta0_s : // unsigned , default = 0
19:0	R/W	0xfc000	reg_adpscl_beta0 : // unsigned , default = 0xfc000

Table 10-2482 VDIN0_HDR2_ADPS_BETA1 0x12AC

Bit(s)	R/W	Default	Description
20	R/W	0	reg_adpscl_beta1_s : // unsigned , default = 0
19:0	R/W	0xfc000	reg_adpscl_beta1 : // unsigned , default = 0xfc000

Table 10-2483 VDIN0_HDR2_ADPS_BETA2 0x12AD

Bit(s)	R/W	Default	Description
20	R/W	0	reg_adpscl_beta2_s : // unsigned , default = 0
19:0	R/W	0xfc000	reg_adpscl_beta2 : // unsigned , default = 0xfc000

Amlogic Proprietary and Confidential
Copyright © Amlogic. All rights reserved.

Table 10-2484 VDIN0_HDR2_ADPS_COEF0 0x12AE

Bit(s)	R/W	Default	Description
27:16	R/W	460	reg_adpscl_ys_coef1 : // unsigned , default = 460
11:0	R/W	1188	reg_adpscl_ys_coef0 : // unsigned , default = 1188

Table 10-2485 VDIN0_HDR2_ADPS_COEF1 0x12AF

Bit(s)	R/W	Default	Description
11:0	R/W	104	reg_adpscl_ys_coef2 : // unsigned , default = 104

Table 10-2486 VDIN0_HDR2_GMUT_CTRL 0x12B0

Bit(s)	R/W	Default	Description
3:0	R/W	14	reg_gmut_shift : // unsigned , default = 14

Table 10-2487 VDIN0_HDR2_GMUT_COEF0 0x12B1

Bit(s)	R/W	Default	Description
31:16	R/W	674	reg_gmut_coef01 : // unsigned , default = 674
15:0	R/W	1285	reg_gmut_coef00 : // unsigned , default = 1285

Table 10-2488 VDIN0_HDR2_GMUT_COEF1 0x12B2

Bit(s)	R/W	Default	Description
31:16	R/W	142	reg_gmut_coef10 : // unsigned , default = 142
15:0	R/W	89	reg_gmut_coef02 : // unsigned , default = 89

Table 10-2489 VDIN0_HDR2_GMUT_COEF2 0x12B3

Bit(s)	R/W	Default	Description
31:16	R/W	23	reg_gmut_coef12 : // unsigned , default = 23
15:0	R/W	1883	reg_gmut_coef11 : // unsigned , default = 1883

Table 10-2490 VDIN0_HDR2_GMUT_COEF3 0x12B4

Bit(s)	R/W	Default	Description
31:16	R/W	180	reg_gmut_coef21 : // unsigned , default = 180
15:0	R/W	34	reg_gmut_coef20 : // unsigned , default = 34

Amlogic Proprietary and Confidential
Copyright © Amlogic. All rights reserved.

Table 10-2491 VDIN0_HDR2_GMUT_COEF4 0x12B5

Bit(s)	R/W	Default	Description
15:0	R/W	1834	reg_gmut_coef22 : // unsigned , default = 1834

Table 10-2492 VDIN0_HDR2_PIPE_CTRL1 0x12B6

Bit(s)	R/W	Default	Description
31:24	R/W	4	vblank_num_oetf : // unsigned , default = 4
23:16	R/W	4	hblank_num_oetf : // unsigned , default = 4
15:8	R/W	10	vblank_num_eotf : // unsigned , default = 10
7:0	R/W	10	hblank_num_eotf : // unsigned , default = 10

Table 10-2493 VDIN0_HDR2_PIPE_CTRL2 0x12B7

Bit(s)	R/W	Default	Description
31:24	R/W	10	vblank_num_cgain : // unsigned , default = 10
23:16	R/W	10	hblank_num_cgain : // unsigned , default = 10
15:8	R/W	11	vblank_num_gmut : // unsigned , default = 11
7:0	R/W	11	hblank_num_gmut : // unsigned , default = 11

Table 10-2494 VDIN0_HDR2_PIPE_CTRL3 0x12B8

Bit(s)	R/W	Default	Description
31:24	R/W	22	vblank_num_adps : // unsigned , default = 22
23:16	R/W	2	hblank_num_adps : // unsigned , default = 2
15:8	R/W	4	vblank_num_uv : // unsigned , default = 4
7:0	R/W	4	hblank_num_uv : // unsigned , default = 4

Table 10-2495 VDIN0_HDR2_PROC_WIN1 0x12B9

Bit(s)	R/W	Default	Description
28:16	R/W	0	proc_win_h_ed : // unsigned , default = 0
12:0	R/W	0	proc_win_h_st : // unsigned , default = 0

Table 10-2496 VDIN0_HDR2_PROC_WIN2 0x12BA

Bit(s)	R/W	Default	Description
31	R/W	0	proc_win_gmut_en : // unsigned , default = 0
30	R/W	0	proc_win_adps_en : // unsigned , default = 0
29	R/W	0	proc_win_cgain_en : // unsigned , default = 0

Amlogic Proprietary and Confidential
Copyright © Amlogic. All rights reserved.

Bit(s)	R/W	Default	Description
28:16	R/W	0	proc_win_v_ed : // unsigned , default = 0
12:0	R/W	0	proc_win_v_st : // unsigned , default = 0

Table 10-2497 VDIN0_HDR2_MATRIXI_EN_CTRL 0x12BB

Bit(s)	R/W	Default	Description
5:4	R/W	0	matrix_gclk_ctrl : // unsigned , default = 0
1	R/W	0	enable_sync_sel : // unsigned , default = 0
0	R/W	0	matrix_conv_en : // unsigned , default = 0

Table 10-2498 VDIN0_HDR2_MATRIXO_EN_CTRL 0x12BC

Bit(s)	R/W	Default	Description
5:4	R/W	0	matrix_gclk_ctrl : // unsigned , default = 0
1	R/W	0	enable_sync_sel : // unsigned , default = 0
0	R/W	0	matrix_conv_en : // unsigned , default = 0

Table 10-2499 VDIN1_HDR2_CTRL 0x1380

Bit(s)	R/W	Default	Description
20:18	R/W	0	reg_din_swap : // unsigned , default = 0
17	R/W	0	reg_out_fmt : // unsigned , default = 0
16	R/W	0	reg_only_mat : // unsigned , default = 0 ,only use input matrix ,work when hdr disable
15	R/W	0	mat_o_en,//output matrix enable ,only work when hdr enable
14	R/W	0	mat_in_en //input matrix enable ,only work when hdr enable
13	R/W	0	reg_VDIN0_HDR2_top_en : // unsigned , default = 0,hdr enable signal
12	R/W	1	reg_cgain_mode : // unsigned , default = 1
7: 6	R/W	1	reg_gmut_mode : // unsigned , default = 1
5	R/W	0	reg_in_shift : // unsigned , default = 0
4	R/W	1	reg_in_fmt : // unsigned , default = 1
3	R/W	1	reg_eo_enable : // unsigned , default = 1
2	R/W	1	reg_oe_enable : // unsigned , default = 1

Table 10-2500 VDIN1_HDR2_CLK_GATE 0x1381

Bit(s)	R/W	Default	Description
31:30	R/W	0	clk_tm : gate clock ctrl (main clock) // unsigned , default = 0
29:28	R/W	0	output : matrix clock gate ctrl // unsigned , default = 0

Amlogic Proprietary and Confidential
Copyright © Amlogic. All rights reserved.

Bit(s)	R/W	Default	Description
25:24	R/W	0	input : matrix clock gate ctrl // unsigned , default = 0
23:22	R/W	0	hdr : top cbus clock gate ctrl // unsigned , default = 0
21:20	R/W	0	eotf : cbus clock gate ctrl // unsigned , default = 0
19:18	R/W	0	oetf : cbus clock gate ctrl // unsigned , default = 0
17:16	R/W	0	gamma : mult cbus clock gate ctrl // unsigned , default = 0
15:14	R/W	0	adaptive : cbus scaler clock gate ctrl // unsigned , default = 0
13:12	R/W	0	cgain : cbus clock gate ctrl // unsigned , default = 0
11:10	R/W	0	eotf : clock gate ctrl // unsigned , default = 0
9:8	R/W	0	oetf : clock gate ctrl // unsigned , default = 0
7:6	R/W	0	gamma : mult clock gate ctrl // unsigned , default = 0
5:4	R/W	0	adaptive : scaler clock gate ctrl // unsigned , default = 0
3:2	R/W	0	uv : gain clock gate ctrl // unsigned , default = 0
1:0	R/W	0	cgain : clock gate ctrl // unsigned , default = 0

Table 10-2501 VDIN1_HDR2_MATRIXI_COEF00_01 0x1382

Bit(s)	R/W	Default	Description
28:16	R/W	0	coef00 : // signed , default = 0
12:0	R/W	0	coef01 : // signed , default = 0

Table 10-2502 VDIN1_HDR2_MATRIXI_COEF02_10 0x1383

Bit(s)	R/W	Default	Description
28:16	R/W	0	coef02 : // signed , default = 0
12:0	R/W	0	coef10 : // signed , default = 0

Table 10-2503 VDIN1_HDR2_MATRIXI_COEF11_12 0x1384

Bit(s)	R/W	Default	Description
28:16	R/W	0	coef11 : // signed , default = 0
12:0	R/W	0	coef12 : // signed , default = 0

Table 10-2504 VDIN1_HDR2_MATRIXI_COEF20_21 0x1385

Bit(s)	R/W	Default	Description
28:16	R/W	0	coef20 : // signed , default = 0
12:0	R/W	0	coef21 : // signed , default = 0

Amlogic Proprietary and Confidential
Copyright © Amlogic. All rights reserved.

Table 10-2505 VDIN1_HDR2_MATRIXI_COEF22 0x1386

Bit(s)	R/W	Default	Description
12:0	R/W	0	coef22 : // signed , default = 0

Table 10-2506 VDIN1_HDR2_MATRIXI_COEF30_31 0x1387

Bit(s)	R/W	Default	Description
28:16	R/W	0	coef13 : // signed , default = 0
12:0	R/W	0	coef14 : // signed , default = 0

Table 10-2507 VDIN1_HDR2_MATRIXI_COEF32_40 0x1388

Bit(s)	R/W	Default	Description
28:16	R/W	0	coef23 : // signed , default = 0
12:0	R/W	0	coef24 : // signed , default = 0

Table 10-2508 VDIN1_HDR2_MATRIXI_COEF41_42 0x1389

Bit(s)	R/W	Default	Description
28:16	R/W	0	coef15 : // signed , default = 0
12:0	R/W	0	coef25 : // signed , default = 0

Table 10-2509 VDIN1_HDR2_MATRIXI_OFFSET0_1 0x138A

Bit(s)	R/W	Default	Description
26:16	R/W	0	offset0 : // signed , default = 0
10:0	R/W	0	offset1 : // signed , default = 0

Table 10-2510 VDIN1_HDR2_MATRIXI_OFFSET2 0x138B

Bit(s)	R/W	Default	Description
10:0	R/W	0	offset2 : // signed , default = 0

Table 10-2511 VDIN1_HDR2_MATRIXI_PRE_OFFSET0_1 0x138C

Bit(s)	R/W	Default	Description
26:16	R/W	0	pre_offset0 : // signed , default = 0
10:0	R/W	0	pre_offset1 : // signed , default = 0

Amlogic Proprietary and Confidential
Copyright © Amlogic. All rights reserved.

Table 10-2512 VDIN1_HDR2_MATRIXI_PRE_OFFSET2 0x138D

Bit(s)	R/W	Default	Description
10:0	R/W	0	pre_offset2 : // signed , default = 0

Table 10-2513 VDIN1_HDR2_MATRIXO_COEF00_01 0x138E

Bit(s)	R/W	Default	Description
28:16	R/W	0	coef00 : // signed , default = 0
12:0	R/W	0	coef01 : // signed , default = 0

Table 10-2514 VDIN1_HDR2_MATRIXO_COEF02_10 0x138F

Bit(s)	R/W	Default	Description
28:16	R/W	0	coef02 : // signed , default = 0
12:0	R/W	0	coef10 : // signed , default = 0

Table 10-2515 VDIN1_HDR2_MATRIXO_COEF11_12 0x1390

Bit(s)	R/W	Default	Description
28:16	R/W	0	coef11 : // signed , default = 0
12:0	R/W	0	coef12 : // signed , default = 0

Table 10-2516 VDIN1_HDR2_MATRIXO_COEF20_21 0x1391

Bit(s)	R/W	Default	Description
28:16	R/W	0	coef20 : // signed , default = 0
12:0	R/W	0	coef21 : // signed , default = 0

Table 10-2517 VDIN1_HDR2_MATRIXO_COEF22 0x1392

Bit(s)	R/W	Default	Description
12:0	R/W	0	coef22 : // signed , default = 0

Table 10-2518 VDIN1_HDR2_MATRIXO_COEF30_31 0x1393

Bit(s)	R/W	Default	Description
28:16	R/W	0	coef13 : // signed , default = 0
12:0	R/W	0	coef14 : // signed , default = 0

Amlogic Proprietary and Confidential
Copyright © Amlogic. All rights reserved.

Table 10-2519 VDIN1_HDR2_MATRIXO_COEF32_40 0x1394

Bit(s)	R/W	Default	Description
28:16	R/W	0	coef23 : // signed , default = 0
12:0	R/W	0	coef24 : // signed , default = 0

Table 10-2520 VDIN1_HDR2_MATRIXO_COEF41_42 0x1395

Bit(s)	R/W	Default	Description
28:16	R/W	0	coef15 : // signed , default = 0
12:0	R/W	0	coef25 : // signed , default = 0

Table 10-2521 VDIN1_HDR2_MATRIXO_OFFSET0_1 0x1396

Bit(s)	R/W	Default	Description
26:16	R/W	0	offset0 : // signed , default = 0
10:0	R/W	0	offset1 : // signed , default = 0

Table 10-2522 VDIN1_HDR2_MATRIXO_OFFSET2 0x1397

Bit(s)	R/W	Default	Description
10:0	R/W	0	offset2 : // signed , default = 0

Table 10-2523 VDIN1_HDR2_MATRIXO_PRE_OFFSET0_1 0x1398

Bit(s)	R/W	Default	Description
26:16	R/W	0	pre_offset0 : // signed , default = 0
10:0	R/W	0	pre_offset1 : // signed , default = 0

Table 10-2524 VDIN1_HDR2_MATRIXO_PRE_OFFSET2 0x1399

Bit(s)	R/W	Default	Description
10:0	R/W	0	pre_offset2 : // signed , default = 0

Table 10-2525 VDIN1_HDR2_MATRIXI_CLIP 0x139A

Bit(s)	R/W	Default	Description
19:8	R/W	0	comp_th : // unsigned , default = 0
7:5	R/W	0	conv_rs : // unsigned , default = 0
4:3	R/W	0	clmod : // unsigned , default = 0

Amlogic Proprietary and Confidential
Copyright © Amlogic. All rights reserved.

Table 10-2526 VDIN1_HDR2_MATRIXO_CLIP 0x139B

Bit(s)	R/W	Default	Description
19:8	R/W	0	comp_th : // unsigned , default = 0
7:5	R/W	0	conv_rs : // unsigned , default = 0
4:3	R/W	0	clmod : // unsigned , default = 0

Table 10-2527 VDIN1_HDR2_CGAIN_OFFT 0x139C

Bit(s)	R/W	Default	Description
26:16	R/W	0	reg_cgain_oft2 : // signed , default = 0
10:0	R/W	0	reg_cgain_oft1 : // signed , default = 0

Table 10-2528 VDIN1_EOTF_LUT_ADDR_PORT 0x139E

Bit(s)	R/W	Default	Description
7:0	R/W	0	eotf_lut_addr : // unsigned , default = 0

Table 10-2529 VDIN1_EOTF_LUT_DATA_PORT 0x139F

Bit(s)	R/W	Default	Description
19:0	R/W	0	eotf_lut_data : // unsigned , default = 0

Table 10-2530 VDIN1_OETF_LUT_ADDR_PORT 0x13A0

Bit(s)	R/W	Default	Description
7:0	R/W	0	oetf_lut_addr : // unsigned , default = 0

Table 10-2531 VDIN1_OETF_LUT_DATA_PORT 0x13A1

Bit(s)	R/W	Default	Description
11:0	R/W	0	oetf_lut_data : // unsigned , default = 0

Table 10-2532 VDIN1_CGAIN_LUT_ADDR_PORT 0x13A2

Bit(s)	R/W	Default	Description
7:0	R/W	0	cgain_lut_addr : // unsigned , default = 0

Table 10-2533 VDIN1_CGAIN_LUT_DATA_PORT 0x13A3

Bit(s)	R/W	Default	Description
11:0	R/W	0	cgain_lut_data : // unsigned , default = 0

Amlogic Proprietary and Confidential
Copyright © Amlogic. All rights reserved.

Table 10-2534 VDIN1_HDR2_CGAIN_COEF0 0x13A4

Bit(s)	R/W	Default	Description
27:16	R/W	0	reg_cgain_coef1 : // unsigned , default = 0
11:0	R/W	0	reg_cgain_coef0 : //unsigned , default = 0

Table 10-2535 VDIN1_HDR2_CGAIN_COEF1 0x13A5

Bit(s)	R/W	Default	Description
11:0	R/W	0	reg_cgain_coef2 : // unsigned , default = 0

Table 10-2536 VDIN1_OGAIN_LUT_ADDR_PORT 0x13A6

Bit(s)	R/W	Default	Description
7:0	R/W	0	ogain_lut_addr : // unsigned , default = 0

Table 10-2537 VDIN1_OGAIN_LUT_DATA_PORT 0x13A7

Bit(s)	R/W	Default	Description
11:0	R/W	0	ogain_lut_data : // unsigned , default = 0

Table 10-2538 VDIN1_HDR2_ADPS_CTRL 0x13A8

Bit(s)	R/W	Default	Description
6	R/W	1	reg_adpscl_bypass2 : // unsigned , default = 1
5	R/W	1	reg_adpscl_bypass1 : // unsigned , default = 1
4	R/W	1	reg_adpscl_bypass0 : // unsigned , default = 1
1:0	R/W	1	reg_adpscl_mode : // unsigned , default = 1

Table 10-2539 VDIN1_HDR2_ADPS_ALPHA0 0x13A9

Bit(s)	R/W	Default	Description
29:16	R/W	0x1000	reg_adpscl_alpha1 : // unsigned , default = 0x1000
13:0	R/W	0x1000	reg_adpscl_alpha0 : // unsigned , default = 0x1000

Table 10-2540 VDIN1_HDR2_ADPS_ALPHA1 0x13AA

Bit(s)	R/W	Default	Description
27:24	R/W	0xc	reg_adpscl_shift0 : // unsigned , default = 0xc
23:20	R/W	0xc	reg_adpscl_shift1 : // unsigned , default = 0xc
19:16	R/W	0xc	reg_adpscl_shift2 : // unsigned , default = 0xc
13:0	R/W	0x1000	reg_adpscl_alpha2 : // unsigned , default = 0x1000

Amlogic Proprietary and Confidential
Copyright © Amlogic. All rights reserved.

Table 10-2541 VDIN1_HDR2_ADPS_BETA0 0x13AB

Bit(s)	R/W	Default	Description
20	R/W	0	reg_adpscl_beta0_s : // unsigned , default = 0
19:0	R/W	0xfc000	reg_adpscl_beta0 : // unsigned , default = 0xfc000

Table 10-2542 VDIN1_HDR2_ADPS_BETA1 0x13AC

Bit(s)	R/W	Default	Description
20	R/W	0	reg_adpscl_beta1_s : // unsigned , default = 0
19:0	R/W	0xfc000	reg_adpscl_beta1 : // unsigned , default = 0xfc000

Table 10-2543 VDIN1_HDR2_ADPS_BETA2 0x13AD

Bit(s)	R/W	Default	Description
20	R/W	0	reg_adpscl_beta2_s : // unsigned , default = 0
19:0	R/W	0xfc000	reg_adpscl_beta2 : // unsigned , default = 0xfc000

Table 10-2544 VDIN1_HDR2_ADPS_COEF0 0x13AE

Bit(s)	R/W	Default	Description
27:16	R/W	460	reg_adpscl_ys_coef1 : // unsigned , default = 460
11:0	R/W	1188	reg_adpscl_ys_coef0 : // unsigned , default = 1188

Table 10-2545 VDIN1_HDR2_ADPS_COEF1 0x13AF

Bit(s)	R/W	Default	Description
11:0	R/W	104	reg_adpscl_ys_coef2 : // unsigned , default = 104

Table 10-2546 VDIN1_HDR2_GMUT_CTRL 0x13B0

Bit(s)	R/W	Default	Description
3:0	R/W	14	reg_gmut_shift : // unsigned , default = 14

Table 10-2547 VDIN1_HDR2_GMUT_COEF0 0x13B1

Bit(s)	R/W	Default	Description
31:16	R/W	674	reg_gmut_coef01 : // unsigned , default = 674
15:0	R/W	1285	reg_gmut_coef00 : // unsigned , default = 1285

Amlogic Proprietary and Confidential
Copyright © Amlogic. All rights reserved.

Table 10-2548 VDIN1_HDR2_GMUT_COEF1 0x13B2

Bit(s)	R/W	Default	Description
31:16	R/W	142	reg_gmut_coef10 : // unsigned , default = 142
15:0	R/W	89	reg_gmut_coef02 : // unsigned , default = 89

Table 10-2549 VDIN1_HDR2_GMUT_COEF2 0x13B3

Bit(s)	R/W	Default	Description
31:16	R/W	23	reg_gmut_coef12 : // unsigned , default = 23
15:0	R/W	1883	reg_gmut_coef11 : // unsigned , default = 1883

Table 10-2550 VDIN1_HDR2_GMUT_COEF3 0x13B4

Bit(s)	R/W	Default	Description
31:16	R/W	180	reg_gmut_coef21 : // unsigned , default = 180
15:0	R/W	34	reg_gmut_coef20 : // unsigned , default = 34

Table 10-2551 VDIN1_HDR2_GMUT_COEF4 0x13B5

Bit(s)	R/W	Default	Description
15:0	R/W	1834	reg_gmut_coef22 : // unsigned , default = 1834

Table 10-2552 VDIN1_HDR2_PIPE_CTRL1 0x13B6

Bit(s)	R/W	Default	Description
31:24	R/W	4	vblank_num_oetf : // unsigned , default = 4
23:16	R/W	4	hblank_num_oetf : // unsigned , default = 4
15:8	R/W	10	vblank_num_eotf : // unsigned , default = 10
7:0	R/W	10	hblank_num_eotf : // unsigned , default = 10

Table 10-2553 VDIN1_HDR2_PIPE_CTRL2 0x13B7

Bit(s)	R/W	Default	Description
31:24	R/W	10	vblank_num_cgain : // unsigned , default = 10
23:16	R/W	10	hblank_num_cgain : // unsigned , default = 10
15:8	R/W	11	vblank_num_gmut : // unsigned , default = 11
7:0	R/W	11	hblank_num_gmut : // unsigned , default = 11

Amlogic Proprietary and Confidential
Copyright © Amlogic. All rights reserved.

Table 10-2554 VDIN1_HDR2_PIPE_CTRL3 0x13B8

Bit(s)	R/W	Default	Description
31:24	R/W	22	vblank_num_adps : // unsigned , default = 22
23:16	R/W	2	hblank_num_adps : // unsigned , default = 2
15:8	R/W	4	vblank_num_uv : // unsigned , default = 4
7:0	R/W	4	hblank_num_uv : // unsigned , default = 4

Table 10-2555 VDIN1_HDR2_PROC_WIN1 0x13B9

Bit(s)	R/W	Default	Description
28:16	R/W	0	proc_win_h_ed : // unsigned , default = 0
12:0	R/W	0	proc_win_h_st : // unsigned , default = 0

Table 10-2556 VDIN1_HDR2_PROC_WIN2 0x13BA

Bit(s)	R/W	Default	Description
31	R/W	0	proc_win_gmut_en : // unsigned , default = 0
30	R/W	0	proc_win_adps_en : // unsigned , default = 0
29	R/W	0	proc_win_cgain_en : // unsigned , default = 0
28:16	R/W	0	proc_win_v_ed : // unsigned , default = 0
12:0	R/W	0	proc_win_v_st : // unsigned , default = 0

Table 10-2557 VDIN1_HDR2_MATRIXI_EN_CTRL 0x13BB

Bit(s)	R/W	Default	Description
5:4	R/W	0	matrix_gclk_ctrl : // unsigned , default = 0
1	R/W	0	enable_sync_sel : // unsigned , default = 0
0	R/W	0	matrix_conv_en : // unsigned , default = 0

Table 10-2558 VDIN1_HDR2_MATRIXO_EN_CTRL 0x13BC

Bit(s)	R/W	Default	Description
5:4	R/W	0	matrix_gclk_ctrl : // unsigned , default = 0
1	R/W	0	enable_sync_sel : // unsigned , default = 0
0	R/W	0	matrix_conv_en : // unsigned , default = 0

Table 10-2559 VD1_HDR2_CTRL 0x3800

Bit(s)	R/W	Default	Description
20:18	R/W	0	reg_din_swap : // unsigned , default = 0
17	R/W	0	reg_out_fmt : // unsigned , default = 0

Amlogic Proprietary and Confidential
Copyright © Amlogic. All rights reserved.

Bit(s)	R/W	Default	Description
16	R/W	0	reg_only_mat : // unsigned , default = 0 ,only use input matrix ,work when hdr disable
15	R/W	0	mat_o_en,//output matrix enable ,only work when hdr enable
14	R/W	0	mat_in_en //input matrix enable ,only work when hdr enable
13	R/W	0	reg_VDIN0_HDR2_top_en : // unsigned , default = 0,hdr enable signal
12	R/W	1	reg_cgain_mode : // unsigned , default = 1
7: 6	R/W	1	reg_gmut_mode : // unsigned , default = 1
5	R/W	0	reg_in_shift : // unsigned , default = 0
4	R/W	1	reg_in_fmt : // unsigned , default = 1
3	R/W	1	reg_eo_enable : // unsigned , default = 1
2	R/W	1	reg_oe_enable : // unsigned , default = 1

Table 10-2560 VD1_HDR2_CLK_GATE 0x3801

Bit(s)	R/W	Default	Description
31:30	R/W	0	clk_tm : gate clock ctrl (main clock) // unsigned , default = 0
29:28	R/W	0	output : matrix clock gate ctrl // unsigned , default = 0
25:24	R/W	0	input : matrix clock gate ctrl // unsigned , default = 0
23:22	R/W	0	hdr : top cbus clock gate ctrl // unsigned , default = 0
21:20	R/W	0	eotf : cbus clock gate ctrl // unsigned , default = 0
19:18	R/W	0	oetf : cbus clock gate ctrl // unsigned , default = 0
17:16	R/W	0	gamma : mult cbus clock gate ctrl // unsigned , default = 0
15:14	R/W	0	adaptive : cbus scaler clock gate ctrl // unsigned , default = 0
13:12	R/W	0	cgain : cbus clock gate ctrl // unsigned , default = 0
11:10	R/W	0	eotf : clock gate ctrl // unsigned , default = 0
9:8	R/W	0	oetf : clock gate ctrl // unsigned , default = 0
7:6	R/W	0	gamma : mult clock gate ctrl // unsigned , default = 0
5:4	R/W	0	adaptive : scaler clock gate ctrl // unsigned , default = 0
3:2	R/W	0	uv : gain clock gate ctrl // unsigned , default = 0
1:0	R/W	0	cgain : clock gate ctrl // unsigned , default = 0

Table 10-2561 VD1_HDR2_MATRIXI_COEF00_01 0x3802

Bit(s)	R/W	Default	Description
28:16	R/W	0	coef00 : // signed , default = 0
12:0	R/W	0	coef01 : // signed , default = 0

Amlogic Proprietary and Confidential
Copyright © Amlogic. All rights reserved.

Table 10-2562 VD1_HDR2_MATRIXI_COEF02_10 0x3803

Bit(s)	R/W	Default	Description
28:16	R/W	0	coef02 : // signed , default = 0
12:0	R/W	0	coef10 : // signed , default = 0

Table 10-2563 VD1_HDR2_MATRIXI_COEF11_12 0x3804

Bit(s)	R/W	Default	Description
28:16	R/W	0	coef11 : // signed , default = 0
12:0	R/W	0	coef12 : // signed , default = 0

Table 10-2564 VD1_HDR2_MATRIXI_COEF20_21 0x3805

Bit(s)	R/W	Default	Description
28:16	R/W	0	coef20 : // signed , default = 0
12:0	R/W	0	coef21 : // signed , default = 0

Table 10-2565 VD1_HDR2_MATRIXI_COEF22 0x3806

Bit(s)	R/W	Default	Description
12:0	R/W	0	coef22 : // signed , default = 0

Table 10-2566 VD1_HDR2_MATRIXI_COEF30_31 0x3807

Bit(s)	R/W	Default	Description
28:16	R/W	0	coef13 : // signed , default = 0
12:0	R/W	0	coef14 : // signed , default = 0

Table 10-2567 VD1_HDR2_MATRIXI_COEF32_40 0x3808

Bit(s)	R/W	Default	Description
28:16	R/W	0	coef23 : // signed , default = 0
12:0	R/W	0	coef24 : // signed , default = 0

Table 10-2568 VD1_HDR2_MATRIXI_COEF41_42 0x3809

Bit(s)	R/W	Default	Description
28:16	R/W	0	coef15 : // signed , default = 0
12:0	R/W	0	coef25 : // signed , default = 0

Amlogic Proprietary and Confidential
Copyright © Amlogic. All rights reserved.

Table 10-2569 VD1_HDR2_MATRIXI_OFFSET0_1 0x380A

Bit(s)	R/W	Default	Description
26:16	R/W	0	offset0 : // signed , default = 0
10:0	R/W	0	offset1 : // signed , default = 0

Table 10-2570 VD1_HDR2_MATRIXI_OFFSET2 0x380B

Bit(s)	R/W	Default	Description
10:0	R/W	0	offset2 : // signed , default = 0

Table 10-2571 VD1_HDR2_MATRIXI_PRE_OFFSET0_1 0x380C

Bit(s)	R/W	Default	Description
26:16	R/W	0	pre_offset0 : // signed , default = 0
10:0	R/W	0	pre_offset1 : // signed , default = 0

Table 10-2572 VD1_HDR2_MATRIXI_PRE_OFFSET2 0x380D

Bit(s)	R/W	Default	Description
10:0	R/W	0	pre_offset2 : // signed , default = 0

Table 10-2573 VD1_HDR2_MATRIXO_COEF00_01 0x380E

Bit(s)	R/W	Default	Description
28:16	R/W	0	coef00 : // signed , default = 0
12:0	R/W	0	coef01 : // signed , default = 0

Table 10-2574 VD1_HDR2_MATRIXO_COEF02_10 0x380F

Bit(s)	R/W	Default	Description
28:16	R/W	0	coef02 : // signed , default = 0
12:0	R/W	0	coef10 : // signed , default = 0

Table 10-2575 VD1_HDR2_MATRIXO_COEF11_12 0x3810

Bit(s)	R/W	Default	Description
28:16	R/W	0	coef11 : // signed , default = 0
12:0	R/W	0	coef12 : // signed , default = 0

Amlogic Proprietary and Confidential
Copyright © Amlogic. All rights reserved.

Table 10-2576 VD1_HDR2_MATRIXO_COEF20_21 0x3811

Bit(s)	R/W	Default	Description
28:16	R/W	0	coef20 : // signed , default = 0
12:0	R/W	0	coef21 : // signed , default = 0

Table 10-2577 VD1_HDR2_MATRIXO_COEF22 0x3812

Bit(s)	R/W	Default	Description
12:0	R/W	0	coef22 : // signed , default = 0

Table 10-2578 VD1_HDR2_MATRIXO_COEF30_31 0x3813

Bit(s)	R/W	Default	Description
28:16	R/W	0	coef13 : // signed , default = 0
12:0	R/W	0	coef14 : // signed , default = 0

Table 10-2579 VD1_HDR2_MATRIXO_COEF32_40 0x3814

Bit(s)	R/W	Default	Description
28:16	R/W	0	coef23 : // signed , default = 0
12:0	R/W	0	coef24 : // signed , default = 0

Table 10-2580 VD1_HDR2_MATRIXO_COEF41_42 0x3815

Bit(s)	R/W	Default	Description
28:16	R/W	0	coef15 : // signed , default = 0
12:0	R/W	0	coef25 : // signed , default = 0

Table 10-2581 VD1_HDR2_MATRIXO_OFFSET0_1 0x3816

Bit(s)	R/W	Default	Description
26:16	R/W	0	offset0 : // signed , default = 0
10:0	R/W	0	offset1 : // signed , default = 0

Table 10-2582 VD1_HDR2_MATRIXO_OFFSET2 0x3817

Bit(s)	R/W	Default	Description
10:0	R/W	0	offset2 : // signed , default = 0

Amlogic Proprietary and Confidential
Copyright © Amlogic. All rights reserved.

Table 10-2583 VD1_HDR2_MATRIXO_PRE_OFFSET0_1 0x3818

Bit(s)	R/W	Default	Description
26:16	R/W	0	pre_offset0 : // signed , default = 0
10:0	R/W	0	pre_offset1 : // signed , default = 0

Table 10-2584 VD1_HDR2_MATRIXO_PRE_OFFSET2 0x3819

Bit(s)	R/W	Default	Description
10:0	R/W	0	pre_offset2 : // signed , default = 0

Table 10-2585 VD1_HDR2_MATRIXI_CLIP 0x381A

Bit(s)	R/W	Default	Description
19:8	R/W	0	comp_th : // unsigned , default = 0
7:5	R/W	0	conv_rs : // unsigned , default = 0
4:3	R/W	0	clmod : // unsigned , default = 0

Table 10-2586 VD1_HDR2_MATRIXO_CLIP 0x381B

Bit(s)	R/W	Default	Description
19:8	R/W	0	comp_th : // unsigned , default = 0
7:5	R/W	0	conv_rs : // unsigned , default = 0
4:3	R/W	0	clmod : // unsigned , default = 0

Table 10-2587 VD1_HDR2_CGAIN_OFFT 0x381C

Bit(s)	R/W	Default	Description
26:16	R/W	0	reg_cgain_oft2 : // signed , default = 0
10:0	R/W	0	reg_cgain_oft1 : // signed , default = 0

Table 10-2588 VD1_EOTF_LUT_ADDR_PORT 0x381E

Bit(s)	R/W	Default	Description
7:0	R/W	0	eotf_lut_addr : // unsigned , default = 0

Table 10-2589 VD1_EOTF_LUT_DATA_PORT 0x381F

Bit(s)	R/W	Default	Description
19:0	R/W	0	eotf_lut_data : // unsigned , default = 0

Amlogic Proprietary and Confidential
Copyright © Amlogic. All rights reserved.

Table 10-2590 VD1_OETF_LUT_ADDR_PORT 0x3820

Bit(s)	R/W	Default	Description
7:0	R/W	0	oetf_lut_addr : // unsigned , default = 0

Table 10-2591 VD1_OETF_LUT_DATA_PORT 0x3821

Bit(s)	R/W	Default	Description
11:0	R/W	0	oetf_lut_data : // unsigned , default = 0

Table 10-2592 VD1_CGAIN_LUT_ADDR_PORT 0x3822

Bit(s)	R/W	Default	Description
7:0	R/W	0	cgain_lut_addr : // unsigned , default = 0

Table 10-2593 VD1_CGAIN_LUT_DATA_PORT 0x3823

Bit(s)	R/W	Default	Description
11:0	R/W	0	cgain_lut_data : // unsigned , default = 0

Table 10-2594 VD1_HDR2_CGAIN_COEF0 0x3824

Bit(s)	R/W	Default	Description
27:16	R/W	0	reg_cgain_coef1 : // unsigned , default = 0
11:0	R/W	0	reg_cgain_coef0 : //unsigned , default = 0

Table 10-2595 VD1_HDR2_CGAIN_COEF1 0x3825

Bit(s)	R/W	Default	Description
11:0	R/W	0	reg_cgain_coef2 : // unsigned , default = 0

Table 10-2596 VD1_OGAIN_LUT_ADDR_PORT 0x3826

Bit(s)	R/W	Default	Description
7:0	R/W	0	ogain_lut_addr : // unsigned , default = 0

Table 10-2597 VD1_OGAIN_LUT_DATA_PORT 0x3827

Bit(s)	R/W	Default	Description
11:0	R/W	0	ogain_lut_data : // unsigned , default = 0

Amlogic Proprietary and Confidential
Copyright © Amlogic. All rights reserved.

Table 10-2598 VD1_HDR2_ADPS_CTRL 0x3828

Bit(s)	R/W	Default	Description
6	R/W	1	reg_adpscl_bypass2 : // unsigned , default = 1
5	R/W	1	reg_adpscl_bypass1 : // unsigned , default = 1
4	R/W	1	reg_adpscl_bypass0 : // unsigned , default = 1
1:0	R/W	1	reg_adpscl_mode : // unsigned , default = 1

Table 10-2599 VD1_HDR2_ADPS_ALPHA0 0x3829

Bit(s)	R/W	Default	Description
29:16	R/W	0x1000	reg_adpscl_alpha1 : // unsigned , default = 0x1000
13:0	R/W	0x1000	reg_adpscl_alpha0 : // unsigned , default = 0x1000

Table 10-2600 VD1_HDR2_ADPS_ALPHA1 0x382A

Bit(s)	R/W	Default	Description
27:24	R/W	0xc	reg_adpscl_shift0 : // unsigned , default = 0xc
23:20	R/W	0xc	reg_adpscl_shift1 : // unsigned , default = 0xc
19:16	R/W	0xc	reg_adpscl_shift2 : // unsigned , default = 0xc
13:0	R/W	0x1000	reg_adpscl_alpha2 : // unsigned , default = 0x1000

Table 10-2601 VD1_HDR2_ADPS_BETA0 0x382B

Bit(s)	R/W	Default	Description
20	R/W	0	reg_adpscl_beta0_s : // unsigned , default = 0
19:0	R/W	0xfc000	reg_adpscl_beta0 : // unsigned , default = 0xfc000

Table 10-2602 VD1_HDR2_ADPS_BETA1 0x382C

Bit(s)	R/W	Default	Description
20	R/W	0	reg_adpscl_beta1_s : // unsigned , default = 0
19:0	R/W	0xfc000	reg_adpscl_beta1 : // unsigned , default = 0xfc000

Table 10-2603 VD1_HDR2_ADPS_BETA2 0x382D

Bit(s)	R/W	Default	Description
20	R/W	0	reg_adpscl_beta2_s : // unsigned , default = 0
19:0	R/W	0xfc000	reg_adpscl_beta2 : // unsigned , default = 0xfc000

Amlogic Proprietary and Confidential
Copyright © Amlogic. All rights reserved.

Table 10-2604 VD1_HDR2_ADPS_COEF0 0x382E

Bit(s)	R/W	Default	Description
27:16	R/W	460	reg_adpscl_ys_coef1 : // unsigned , default = 460
11:0	R/W	1188	reg_adpscl_ys_coef0 : // unsigned , default = 1188

Table 10-2605 VD1_HDR2_ADPS_COEF1 0x382F

Bit(s)	R/W	Default	Description
11:0	R/W	104	reg_adpscl_ys_coef2 : // unsigned , default = 104

Table 10-2606 VD1_HDR2_GMUT_CTRL 0x3830

Bit(s)	R/W	Default	Description
3:0	R/W	14	reg_gmut_shift : // unsigned , default = 14

Table 10-2607 VD1_HDR2_GMUT_COEF0 0x3831

Bit(s)	R/W	Default	Description
31:16	R/W	674	reg_gmut_coef01 : // unsigned , default = 674
15:0	R/W	1285	reg_gmut_coef00 : // unsigned , default = 1285

Table 10-2608 VD1_HDR2_GMUT_COEF1 0x3832

Bit(s)	R/W	Default	Description
31:16	R/W	142	reg_gmut_coef10 : // unsigned , default = 142
15:0	R/W	89	reg_gmut_coef02 : // unsigned , default = 89

Table 10-2609 VD1_HDR2_GMUT_COEF2 0x3833

Bit(s)	R/W	Default	Description
31:16	R/W	23	reg_gmut_coef12 : // unsigned , default = 23
15:0	R/W	1883	reg_gmut_coef11 : // unsigned , default = 1883

Table 10-2610 VD1_HDR2_GMUT_COEF3 0x3834

Bit(s)	R/W	Default	Description
31:16	R/W	180	reg_gmut_coef21 : // unsigned , default = 180
15:0	R/W	34	reg_gmut_coef20 : // unsigned , default = 34

Amlogic Proprietary and Confidential
Copyright © Amlogic. All rights reserved.

Table 10-2611 VD1_HDR2_GMUT_COEF4 0x3835

Bit(s)	R/W	Default	Description
15:0	R/W	1834	reg_gmut_coef22 : // unsigned , default = 1834

Table 10-2612 VD1_HDR2_PIPE_CTRL1 0x3836

Bit(s)	R/W	Default	Description
31:24	R/W	4	vblank_num_oetf : // unsigned , default = 4
23:16	R/W	4	hblank_num_oetf : // unsigned , default = 4
15:8	R/W	10	vblank_num_eotf : // unsigned , default = 10
7:0	R/W	10	hblank_num_eotf : // unsigned , default = 10

Table 10-2613 VD1_HDR2_PIPE_CTRL2 0x3837

Bit(s)	R/W	Default	Description
31:24	R/W	10	vblank_num_cgain : // unsigned , default = 10
23:16	R/W	10	hblank_num_cgain : // unsigned , default = 10
15:8	R/W	11	vblank_num_gmut : // unsigned , default = 11
7:0	R/W	11	hblank_num_gmut : // unsigned , default = 11

Table 10-2614 VD1_HDR2_PIPE_CTRL3 0x3838

Bit(s)	R/W	Default	Description
31:24	R/W	22	vblank_num_adps : // unsigned , default = 22
23:16	R/W	2	hblank_num_adps : // unsigned , default = 2
15:8	R/W	4	vblank_num_uv : // unsigned , default = 4
7:0	R/W	4	hblank_num_uv : // unsigned , default = 4

Table 10-2615 VD1_HDR2_PROC_WIN1 0x3839

Bit(s)	R/W	Default	Description
28:16	R/W	0	proc_win_h_ed : // unsigned , default = 0
12:0	R/W	0	proc_win_h_st : // unsigned , default = 0

Table 10-2616 VD1_HDR2_PROC_WIN2 0x383A

Bit(s)	R/W	Default	Description
31	R/W	0	proc_win_gmut_en : // unsigned , default = 0
30	R/W	0	proc_win_adps_en : // unsigned , default = 0
29	R/W	0	proc_win_cgain_en : // unsigned , default = 0

Amlogic Proprietary and Confidential
Copyright © Amlogic. All rights reserved.

Bit(s)	R/W	Default	Description
28:16	R/W	0	proc_win_v_ed : // unsigned , default = 0
12:0	R/W	0	proc_win_v_st : // unsigned , default = 0

Table 10-2617 VD1_HDR2_MATRIXI_EN_CTRL 0x383B

Bit(s)	R/W	Default	Description
5:4	R/W	0	matrix_gclk_ctrl : // unsigned , default = 0
1	R/W	0	enable_sync_sel : // unsigned , default = 0
0	R/W	0	matrix_conv_en : // unsigned , default = 0

Table 10-2618 VD1_HDR2_MATRIXO_EN_CTRL 0x383C

Bit(s)	R/W	Default	Description
5:4	R/W	0	matrix_gclk_ctrl : // unsigned , default = 0
1	R/W	0	enable_sync_sel : // unsigned , default = 0
0	R/W	0	matrix_conv_en : // unsigned , default = 0

Table 10-2619 VD1_HDR2_HIST_CTRL 0x383D

Bit(s)	R/W	Default	Description
23-16	R/W	0	hist result read index
15-8	R/W	0	gate clock ctrl
5	R/W	0	piecewise mode enable
4	R/W	0	hist window enable
3	R/W	0	data shfit enable
2-0	R/W	0	hist input select 0: e_rgb max 1: e_luma 2/3: e_noliear_sat 4/5: o_before_gamma 6/7 : after_gamma

Table 10-2620 VD1_HDR2_HIST_H_START_END 0x383E

Bit(s)	R/W	Default	Description
28-16	R/W	0	hist h start
12-0	R/W	0	hist h end

Table 10-2621 VD1_HDR2_HIST_V_START_END 0x383F

Bit(s)	R/W	Default	Description
28-16	R/W	0	hist v start
12-0	R/W	0	hist v end

Amlogic Proprietary and Confidential
Copyright © Amlogic. All rights reserved.

Table 10-2622 VD1_HDR2_HIST_RD 0x3840

Bit(s)	R/W	Default	Description
23-0	R	0	hist 128 bin result

Table 10-2623 VD2_HDR2_CTRL 0x3850

Bit(s)	R/W	Default	Description
20:18	R/W	0	reg_din_swap : // unsigned , default = 0
17	R/W	0	reg_out_fmt : // unsigned , default = 0
16	R/W	0	reg_only_mat : // unsigned , default = 0 ,only use input matrix ,work when hdr disable
15	R/W	0	mat_o_en,//output matrix enable ,only work when hdr enable
14	R/W	0	mat_in_en //input matrix enable ,only work when hdr enable
13	R/W	0	reg_VDIN0_HDR2_top_en : // unsigned , default = 0,hdr enable signal
12	R/W	1	reg_cgain_mode : // unsigned , default = 1
7: 6	R/W	1	reg_gmut_mode : // unsigned , default = 1
5	R/W	0	reg_in_shift : // unsigned , default = 0
4	R/W	1	reg_in_fmt : // unsigned , default = 1
3	R/W	1	reg_eo_enable : // unsigned , default = 1
2	R/W	1	reg_oe_enable : // unsigned , default = 1

Table 10-2624 VD2_HDR2_CLK_GATE 0x3851

Bit(s)	R/W	Default	Description
31:30	R/W	0	clk_tm : gate clock ctrl (main clock) // unsigned , default = 0
29:28	R/W	0	output : matrix clock gate ctrl // unsigned , default = 0
25:24	R/W	0	input : matrix clock gate ctrl // unsigned , default = 0
23:22	R/W	0	hdr : top cbus clock gate ctrl // unsigned , default = 0
21:20	R/W	0	eotf : cbus clock gate ctrl // unsigned , default = 0
19:18	R/W	0	oetf : cbus clock gate ctrl // unsigned , default = 0
17:16	R/W	0	gamma : mult cbus clock gate ctrl // unsigned , default = 0
15:14	R/W	0	adaptive : cbus scaler clock gate ctrl // unsigned , default = 0
13:12	R/W	0	cgain : cbus clock gate ctrl // unsigned , default = 0
11:10	R/W	0	eotf : clock gate ctrl // unsigned , default = 0
9:8	R/W	0	oetf : clock gate ctrl // unsigned , default = 0
7:6	R/W	0	gamma : mult clock gate ctrl // unsigned , default = 0
5:4	R/W	0	adaptive : scaler clock gate ctrl // unsigned , default = 0
3:2	R/W	0	uv : gain clock gate ctrl // unsigned , default = 0
1:0	R/W	0	cgain : clock gate ctrl // unsigned , default = 0

Amlogic Proprietary and Confidential
Copyright © Amlogic. All rights reserved.

Table 10-2625 VD2_HDR2_MATRIXI_COEF00_01 0x3852

Bit(s)	R/W	Default	Description
28:16	R/W	0	coef00 : // signed , default = 0
12:0	R/W	0	coef01 : // signed , default = 0

Table 10-2626 VD2_HDR2_MATRIXI_COEF02_10 0x3853

Bit(s)	R/W	Default	Description
28:16	R/W	0	coef02 : // signed , default = 0
12:0	R/W	0	coef10 : // signed , default = 0

Table 10-2627 VD2_HDR2_MATRIXI_COEF11_12 0x3854

Bit(s)	R/W	Default	Description
28:16	R/W	0	coef11 : // signed , default = 0
12:0	R/W	0	coef12 : // signed , default = 0

Table 10-2628 VD2_HDR2_MATRIXI_COEF20_21 0x3855

Bit(s)	R/W	Default	Description
28:16	R/W	0	coef20 : // signed , default = 0
12:0	R/W	0	coef21 : // signed , default = 0

Table 10-2629 VD2_HDR2_MATRIXI_COEF22 0x3856

Bit(s)	R/W	Default	Description
12:0	R/W	0	coef22 : // signed , default = 0

Table 10-2630 VD2_HDR2_MATRIXI_COEF30_31 0x3857

Bit(s)	R/W	Default	Description
28:16	R/W	0	coef13 : // signed , default = 0
12:0	R/W	0	coef14 : // signed , default = 0

Table 10-2631 VD2_HDR2_MATRIXI_COEF32_40 0x3858

Bit(s)	R/W	Default	Description
28:16	R/W	0	coef23 : // signed , default = 0
12:0	R/W	0	coef24 : // signed , default = 0

Amlogic Proprietary and Confidential
Copyright © Amlogic. All rights reserved.

Table 10-2632 VD2_HDR2_MATRIXI_COEF41_42 0x3859

Bit(s)	R/W	Default	Description
28:16	R/W	0	coef15 : // signed , default = 0
12:0	R/W	0	coef25 : // signed , default = 0

Table 10-2633 VD2_HDR2_MATRIXI_OFFSET0_1 0x385A

Bit(s)	R/W	Default	Description
26:16	R/W	0	offset0 : // signed , default = 0
10:0	R/W	0	offset1 : // signed , default = 0

Table 10-2634 VD2_HDR2_MATRIXI_OFFSET2 0x385B

Bit(s)	R/W	Default	Description
10:0	R/W	0	offset2 : // signed , default = 0

Table 10-2635 VD2_HDR2_MATRIXI_PRE_OFFSET0_1 0x385C

Bit(s)	R/W	Default	Description
26:16	R/W	0	pre_offset0 : // signed , default = 0
10:0	R/W	0	pre_offset1 : // signed , default = 0

Table 10-2636 VD2_HDR2_MATRIXI_PRE_OFFSET2 0x385D

Bit(s)	R/W	Default	Description
10:0	R/W	0	pre_offset2 : // signed , default = 0

Table 10-2637 VD2_HDR2_MATRIXO_COEF00_01 0x385E

Bit(s)	R/W	Default	Description
28:16	R/W	0	coef00 : // signed , default = 0
12:0	R/W	0	coef01 : // signed , default = 0

Table 10-2638 VD2_HDR2_MATRIXO_COEF02_10 0x385F

Bit(s)	R/W	Default	Description
28:16	R/W	0	coef02 : // signed , default = 0
12:0	R/W	0	coef10 : // signed , default = 0

Amlogic Proprietary and Confidential
Copyright © Amlogic. All rights reserved.

Table 10-2639 VD2_HDR2_MATRIXO_COEF11_12 0x3860

Bit(s)	R/W	Default	Description
28:16	R/W	0	coef11 : // signed , default = 0
12:0	R/W	0	coef12 : // signed , default = 0

Table 10-2640 VD2_HDR2_MATRIXO_COEF20_21 0x3861

Bit(s)	R/W	Default	Description
28:16	R/W	0	coef20 : // signed , default = 0
12:0	R/W	0	coef21 : // signed , default = 0

Table 10-2641 VD2_HDR2_MATRIXO_COEF22 0x3862

Bit(s)	R/W	Default	Description
12:0	R/W	0	coef22 : // signed , default = 0

Table 10-2642 VD2_HDR2_MATRIXO_COEF30_31 0x3863

Bit(s)	R/W	Default	Description
28:16	R/W	0	coef13 : // signed , default = 0
12:0	R/W	0	coef14 : // signed , default = 0

Table 10-2643 VD2_HDR2_MATRIXO_COEF32_40 0x3864

Bit(s)	R/W	Default	Description
28:16	R/W	0	coef23 : // signed , default = 0
12:0	R/W	0	coef24 : // signed , default = 0

Table 10-2644 VD2_HDR2_MATRIXO_COEF41_42 0x3865

Bit(s)	R/W	Default	Description
28:16	R/W	0	coef15 : // signed , default = 0
12:0	R/W	0	coef25 : // signed , default = 0

Table 10-2645 VD2_HDR2_MATRIXO_OFFSET0_1 0x3866

Bit(s)	R/W	Default	Description
26:16	R/W	0	offset0 : // signed , default = 0
10:0	R/W	0	offset1 : // signed , default = 0

Amlogic Proprietary and Confidential
Copyright © Amlogic. All rights reserved.

Table 10-2646 VD2_HDR2_MATRIXO_OFFSET2 0x3867

Bit(s)	R/W	Default	Description
10:0	R/W	0	offset2 : // signed , default = 0

Table 10-2647 VD2_HDR2_MATRIXO_PRE_OFFSET0_1 0x3868

Bit(s)	R/W	Default	Description
26:16	R/W	0	pre_offset0 : // signed , default = 0
10:0	R/W	0	pre_offset1 : // signed , default = 0

Table 10-2648 VD2_HDR2_MATRIXO_PRE_OFFSET2 0x3869

Bit(s)	R/W	Default	Description
10:0	R/W	0	pre_offset2 : // signed , default = 0

Table 10-2649 VD2_HDR2_MATRIXI_CLIP 0x386A

Bit(s)	R/W	Default	Description
19:8	R/W	0	comp_th : // unsigned , default = 0
7:5	R/W	0	conv_rs : // unsigned , default = 0
4:3	R/W	0	clmod : // unsigned , default = 0

Table 10-2650 VD2_HDR2_MATRIXO_CLIP 0x386B

Bit(s)	R/W	Default	Description
19:8	R/W	0	comp_th : // unsigned , default = 0
7:5	R/W	0	conv_rs : // unsigned , default = 0
4:3	R/W	0	clmod : // unsigned , default = 0

Table 10-2651 VD2_HDR2_CGAIN_OFFT 0x386C

Bit(s)	R/W	Default	Description
26:16	R/W	0	reg_cgain_oft2 : // signed , default = 0
10:0	R/W	0	reg_cgain_oft1 : // signed , default = 0

Table 10-2652 VD2_EOTF_LUT_ADDR_PORT 0x386E

Bit(s)	R/W	Default	Description
7:0	R/W	0	eotf_lut_addr : // unsigned , default = 0

Amlogic Proprietary and Confidential
Copyright © Amlogic. All rights reserved.

Table 10-2653 VD2_EOTF_LUT_DATA_PORT 0x386F

Bit(s)	R/W	Default	Description
19:0	R/W	0	eotf_lut_data : // unsigned , default = 0

Table 10-2654 VD2_OETF_LUT_ADDR_PORT 0x3870

Bit(s)	R/W	Default	Description
7:0	R/W	0	oetf_lut_addr : // unsigned , default = 0

Table 10-2655 VD2_OETF_LUT_DATA_PORT 0x3871

Bit(s)	R/W	Default	Description
11:0	R/W	0	oetf_lut_data : // unsigned , default = 0

Table 10-2656 VD2_CGAIN_LUT_ADDR_PORT 0x3872

Bit(s)	R/W	Default	Description
7:0	R/W	0	cgain_lut_addr : // unsigned , default = 0

Table 10-2657 VD2_CGAIN_LUT_DATA_PORT 0x3873

Bit(s)	R/W	Default	Description
11:0	R/W	0	cgain_lut_data : // unsigned , default = 0

Table 10-2658 VD2_HDR2_CGAIN_COEF0 0x3874

Bit(s)	R/W	Default	Description
27:16	R/W	0	reg_cgain_coef1 : // unsigned , default = 0
11:0	R/W	0	reg_cgain_coef0 : //unsigned , default = 0

Table 10-2659 VD2_HDR2_CGAIN_COEF1 0x3875

Bit(s)	R/W	Default	Description
11:0	R/W	0	reg_cgain_coef2 : // unsigned , default = 0

Table 10-2660 VD2_OGAIN_LUT_ADDR_PORT 0x3876

Bit(s)	R/W	Default	Description
7:0	R/W	0	ogain_lut_addr : // unsigned , default = 0

Amlogic Proprietary and Confidential
Copyright © Amlogic. All rights reserved.

Table 10-2661 VD2_OGAIN_LUT_DATA_PORT 0x3877

Bit(s)	R/W	Default	Description
11:0	R/W	0	ogain_lut_data : // unsigned , default = 0

Table 10-2662 VD2_HDR2_ADPS_CTRL 0x3878

Bit(s)	R/W	Default	Description
6	R/W	1	reg_adpscl_bypass2 : // unsigned , default = 1
5	R/W	1	reg_adpscl_bypass1 : // unsigned , default = 1
4	R/W	1	reg_adpscl_bypass0 : // unsigned , default = 1
1:0	R/W	1	reg_adpscl_mode : // unsigned , default = 1

Table 10-2663 VD2_HDR2_ADPS_ALPHA0 0x3879

Bit(s)	R/W	Default	Description
29:16	R/W	0x1000	reg_adpscl_alpha1 : // unsigned , default = 0x1000
13:0	R/W	0x1000	reg_adpscl_alpha0 : // unsigned , default = 0x1000

Table 10-2664 VD2_HDR2_ADPS_ALPHA1 0x387A

Bit(s)	R/W	Default	Description
27:24	R/W	0xc	reg_adpscl_shift0 : // unsigned , default = 0xc
23:20	R/W	0xc	reg_adpscl_shift1 : // unsigned , default = 0xc
19:16	R/W	0xc	reg_adpscl_shift2 : // unsigned , default = 0xc
13:0	R/W	0x1000	reg_adpscl_alpha2 : // unsigned , default = 0x1000

Table 10-2665 VD2_HDR2_ADPS_BETA0 0x387B

Bit(s)	R/W	Default	Description
20	R/W	0	reg_adpscl_beta0_s : // unsigned , default = 0
19:0	R/W	0xfc000	reg_adpscl_beta0 : // unsigned , default = 0xfc000

Table 10-2666 VD2_HDR2_ADPS_BETA1 0x387C

Bit(s)	R/W	Default	Description
20	R/W	0	reg_adpscl_beta1_s : // unsigned , default = 0
19:0	R/W	0xfc000	reg_adpscl_beta1 : // unsigned , default = 0xfc000

Amlogic Proprietary and Confidential
Copyright © Amlogic. All rights reserved.

Table 10-2667 VD2_HDR2_ADPS_BETA2 0x387D

Bit(s)	R/W	Default	Description
20	R/W	0	reg_adpscl_beta2_s : // unsigned , default = 0
19:0	R/W	0xfc000	reg_adpscl_beta2 : // unsigned , default = 0xfc000

Table 10-2668 VD2_HDR2_ADPS_COEF0 0x387E

Bit(s)	R/W	Default	Description
27:16	R/W	460	reg_adpscl_ys_coef1 : // unsigned , default = 460
11:0	R/W	1188	reg_adpscl_ys_coef0 : // unsigned , default = 1188

Table 10-2669 VD2_HDR2_ADPS_COEF1 0x387F

Bit(s)	R/W	Default	Description
11:0	R/W	104	reg_adpscl_ys_coef2 : // unsigned , default = 104

Table 10-2670 VD2_HDR2_GMUT_CTRL 0x3880

Bit(s)	R/W	Default	Description
3:0	R/W	14	reg_gmut_shift : // unsigned , default = 14

Table 10-2671 VD2_HDR2_GMUT_COEF0 0x3881

Bit(s)	R/W	Default	Description
31:16	R/W	674	reg_gmut_coef01 : // unsigned , default = 674
15:0	R/W	1285	reg_gmut_coef00 : // unsigned , default = 1285

Table 10-2672 VD2_HDR2_GMUT_COEF1 0x3882

Bit(s)	R/W	Default	Description
31:16	R/W	142	reg_gmut_coef10 : // unsigned , default = 142
15:0	R/W	89	reg_gmut_coef02 : // unsigned , default = 89

Table 10-2673 VD2_HDR2_GMUT_COEF2 0x3883

Bit(s)	R/W	Default	Description
31:16	R/W	23	reg_gmut_coef12 : // unsigned , default = 23
15:0	R/W	1883	reg_gmut_coef11 : // unsigned , default = 1883

Amlogic Proprietary and Confidential
Copyright © Amlogic. All rights reserved.

Table 10-2674 VD2_HDR2_GMUT_COEF3 0x3884

Bit(s)	R/W	Default	Description
31:16	R/W	180	reg_gmut_coef21 : // unsigned , default = 180
15:0	R/W	34	reg_gmut_coef20 : // unsigned , default = 34

Table 10-2675 VD2_HDR2_GMUT_COEF4 0x3885

Bit(s)	R/W	Default	Description
15:0	R/W	1834	reg_gmut_coef22 : // unsigned , default = 1834

Table 10-2676 VD2_HDR2_PIPE_CTRL1 0x3886

Bit(s)	R/W	Default	Description
31:24	R/W	4	vblank_num_oetf : // unsigned , default = 4
23:16	R/W	4	hblank_num_oetf : // unsigned , default = 4
15:8	R/W	10	vblank_num_eotf : // unsigned , default = 10
7:0	R/W	10	hblank_num_eotf : // unsigned , default = 10

Table 10-2677 VD2_HDR2_PIPE_CTRL2 0x3887

Bit(s)	R/W	Default	Description
31:24	R/W	10	vblank_num_cgain : // unsigned , default = 10
23:16	R/W	10	hblank_num_cgain : // unsigned , default = 10
15:8	R/W	11	vblank_num_gmut : // unsigned , default = 11
7:0	R/W	11	hblank_num_gmut : // unsigned , default = 11

Table 10-2678 VD2_HDR2_PIPE_CTRL3 0x3888

Bit(s)	R/W	Default	Description
31:24	R/W	22	vblank_num_adps : // unsigned , default = 22
23:16	R/W	2	hblank_num_adps : // unsigned , default = 2
15:8	R/W	4	vblank_num_uv : // unsigned , default = 4
7:0	R/W	4	hblank_num_uv : // unsigned , default = 4

Table 10-2679 VD2_HDR2_PROC_WIN1 0x3889

Bit(s)	R/W	Default	Description
28:16	R/W	0	proc_win_h_ed : // unsigned , default = 0
12:0	R/W	0	proc_win_h_st : // unsigned , default = 0

Amlogic Proprietary and Confidential
Copyright © Amlogic. All rights reserved.

Table 10-2680 VD2_HDR2_PROC_WIN2 0x388A

Bit(s)	R/W	Default	Description
31	R/W	0	proc_win_gmut_en : // unsigned , default = 0
30	R/W	0	proc_win_adps_en : // unsigned , default = 0
29	R/W	0	proc_win_cgain_en : // unsigned , default = 0
28:16	R/W	0	proc_win_v_ed : // unsigned , default = 0
12:0	R/W	0	proc_win_v_st : // unsigned , default = 0

Table 10-2681 VD2_HDR2_MATRIXI_EN_CTRL 0x388B

Bit(s)	R/W	Default	Description
5:4	R/W	0	matrix_gclk_ctrl : // unsigned , default = 0
1	R/W	0	enable_sync_sel : // unsigned , default = 0
0	R/W	0	matrix_conv_en : // unsigned , default = 0

Table 10-2682 VD2_HDR2_MATRIXO_EN_CTRL 0x388C

Bit(s)	R/W	Default	Description
5:4	R/W	0	matrix_gclk_ctrl : // unsigned , default = 0
1	R/W	0	enable_sync_sel : // unsigned , default = 0
0	R/W	0	matrix_conv_en : // unsigned , default = 0

Table 10-2683 OSD1_HDR2_CTRL 0x38A0

Bit(s)	R/W	Default	Description
20:18	R/W	0	reg_din_swap : // unsigned , default = 0
17	R/W	0	reg_out_fmt : // unsigned , default = 0
16	R/W	0	reg_only_mat : // unsigned , default = 0 ,only use input matrix ,work when hdr disable
15	R/W	0	mat_o_en,//output matrix enable ,only work when hdr enable
14	R/W	0	mat_in_en //input matrix enable ,only work when hdr enable
13	R/W	0	reg_VDIN0_HDR2_top_en : // unsigned , default = 0,hdr enable signal
12	R/W	1	reg_cgain_mode : // unsigned , default = 1
7: 6	R/W	1	reg_gmut_mode : // unsigned , default = 1
5	R/W	0	reg_in_shift : // unsigned , default = 0
4	R/W	1	reg_in_fmt : // unsigned , default = 1
3	R/W	1	reg_eo_enable : // unsigned , default = 1
2	R/W	1	reg_oe_enable : // unsigned , default = 1

Amlogic Proprietary and Confidential
Copyright © Amlogic. All rights reserved.

Table 10-2684 OSD1_HDR2_CLK_GATE 0x38A1

Bit(s)	R/W	Default	Description
31:30	R/W	0	clk_tm : gate clock ctrl (main clock) // unsigned , default = 0
29:28	R/W	0	output : matrix clock gate ctrl // unsigned , default = 0
25:24	R/W	0	input : matrix clock gate ctrl // unsigned , default = 0
23:22	R/W	0	hdr : top cbus clock gate ctrl // unsigned , default = 0
21:20	R/W	0	eotf : cbus clock gate ctrl // unsigned , default = 0
19:18	R/W	0	oetf : cbus clock gate ctrl // unsigned , default = 0
17:16	R/W	0	gamma : mult cbus clock gate ctrl // unsigned , default = 0
15:14	R/W	0	adaptive : cbus scaler clock gate ctrl // unsigned , default = 0
13:12	R/W	0	cgain : cbus clock gate ctrl // unsigned , default = 0
11:10	R/W	0	eotf : clock gate ctrl // unsigned , default = 0
9:8	R/W	0	oetf : clock gate ctrl // unsigned , default = 0
7:6	R/W	0	gamma : mult clock gate ctrl // unsigned , default = 0
5:4	R/W	0	adaptive : scaler clock gate ctrl // unsigned , default = 0
3:2	R/W	0	uv : gain clock gate ctrl // unsigned , default = 0
1:0	R/W	0	cgain : clock gate ctrl // unsigned , default = 0

Table 10-2685 OSD1_HDR2_MATRIXI_COEF00_01 0x38A2

Bit(s)	R/W	Default	Description
28:16	R/W	0	coef00 : // signed , default = 0
12:0	R/W	0	coef01 : // signed , default = 0

Table 10-2686 OSD1_HDR2_MATRIXI_COEF02_10 0x38A3

Bit(s)	R/W	Default	Description
28:16	R/W	0	coef02 : // signed , default = 0
12:0	R/W	0	coef10 : // signed , default = 0

Table 10-2687 OSD1_HDR2_MATRIXI_COEF11_12 0x38A4

Bit(s)	R/W	Default	Description
28:16	R/W	0	coef11 : // signed , default = 0
12:0	R/W	0	coef12 : // signed , default = 0

Amlogic Proprietary and Confidential
Copyright © Amlogic. All rights reserved.

Table 10-2688 OSD1_HDR2_MATRIXI_COEF20_21 0x38A5

Bit(s)	R/W	Default	Description
28:16	R/W	0	coef20 : // signed , default = 0
12:0	R/W	0	coef21 : // signed , default = 0

Table 10-2689 OSD1_HDR2_MATRIXI_COEF22 0x38A6

Bit(s)	R/W	Default	Description
12:0	R/W	0	coef22 : // signed , default = 0

Table 10-2690 OSD1_HDR2_MATRIXI_COEF30_31 0x38A7

Bit(s)	R/W	Default	Description
28:16	R/W	0	coef13 : // signed , default = 0
12:0	R/W	0	coef14 : // signed , default = 0

Table 10-2691 OSD1_HDR2_MATRIXI_COEF32_40 0x38A8

Bit(s)	R/W	Default	Description
28:16	R/W	0	coef23 : // signed , default = 0
12:0	R/W	0	coef24 : // signed , default = 0

Table 10-2692 OSD1_HDR2_MATRIXI_COEF41_42 0x38A9

Bit(s)	R/W	Default	Description
28:16	R/W	0	coef15 : // signed , default = 0
12:0	R/W	0	coef25 : // signed , default = 0

Table 10-2693 OSD1_HDR2_MATRIXI_OFFSET0_1 0x38AA

Bit(s)	R/W	Default	Description
26:16	R/W	0	offset0 : // signed , default = 0
10:0	R/W	0	offset1 : // signed , default = 0

Table 10-2694 OSD1_HDR2_MATRIXI_OFFSET2 0x38AB

Bit(s)	R/W	Default	Description
10:0	R/W	0	offset2 : // signed , default = 0

Amlogic Proprietary and Confidential
Copyright © Amlogic. All rights reserved.

Table 10-2695 OSD1_HDR2_MATRIXI_PRE_OFFSET0_1 0x38AC

Bit(s)	R/W	Default	Description
26:16	R/W	0	pre_offset0 : // signed , default = 0
10:0	R/W	0	pre_offset1 : // signed , default = 0

Table 10-2696 OSD1_HDR2_MATRIXI_PRE_OFFSET2 0x38AD

Bit(s)	R/W	Default	Description
10:0	R/W	0	pre_offset2 : // signed , default = 0

Table 10-2697 OSD1_HDR2_MATRIXO_COEF00_01 0x38AE

Bit(s)	R/W	Default	Description
28:16	R/W	0	coef00 : // signed , default = 0
12:0	R/W	0	coef01 : // signed , default = 0

Table 10-2698 OSD1_HDR2_MATRIXO_COEF02_10 0x38AF

Bit(s)	R/W	Default	Description
28:16	R/W	0	coef02 : // signed , default = 0
12:0	R/W	0	coef10 : // signed , default = 0

Table 10-2699 OSD1_HDR2_MATRIXO_COEF11_12 0x38B0

Bit(s)	R/W	Default	Description
28:16	R/W	0	coef11 : // signed , default = 0
12:0	R/W	0	coef12 : // signed , default = 0

Table 10-2700 OSD1_HDR2_MATRIXO_COEF20_21 0x38B1

Bit(s)	R/W	Default	Description
28:16	R/W	0	coef20 : // signed , default = 0
12:0	R/W	0	coef21 : // signed , default = 0

Table 10-2701 OSD1_HDR2_MATRIXO_COEF22 0x38B2

Bit(s)	R/W	Default	Description
12:0	R/W	0	coef22 : // signed , default = 0

Amlogic Proprietary and Confidential
Copyright © Amlogic. All rights reserved.

Table 10-2702 OSD1_HDR2_MATRIXO_COEF30_31 0x38B3

Bit(s)	R/W	Default	Description
28:16	R/W	0	coef13 : // signed , default = 0
12:0	R/W	0	coef14 : // signed , default = 0

Table 10-2703 OSD1_HDR2_MATRIXO_COEF32_40 0x38B4

Bit(s)	R/W	Default	Description
28:16	R/W	0	coef23 : // signed , default = 0
12:0	R/W	0	coef24 : // signed , default = 0

Table 10-2704 OSD1_HDR2_MATRIXO_COEF41_42 0x38B5

Bit(s)	R/W	Default	Description
28:16	R/W	0	coef15 : // signed , default = 0
12:0	R/W	0	coef25 : // signed , default = 0

Table 10-2705 OSD1_HDR2_MATRIXO_OFFSET0_1 0x38B6

Bit(s)	R/W	Default	Description
26:16	R/W	0	offset0 : // signed , default = 0
10:0	R/W	0	offset1 : // signed , default = 0

Table 10-2706 OSD1_HDR2_MATRIXO_OFFSET2 0x38B7

Bit(s)	R/W	Default	Description
10:0	R/W	0	offset2 : // signed , default = 0

Table 10-2707 OSD1_HDR2_MATRIXO_PRE_OFFSET0_1 0x38B8

Bit(s)	R/W	Default	Description
26:16	R/W	0	pre_offset0 : // signed , default = 0
10:0	R/W	0	pre_offset1 : // signed , default = 0

Table 10-2708 OSD1_HDR2_MATRIXO_PRE_OFFSET2 0x38B9

Bit(s)	R/W	Default	Description
10:0	R/W	0	pre_offset2 : // signed , default = 0

Amlogic Proprietary and Confidential
Copyright © Amlogic. All rights reserved.

Table 10-2709 OSD1_HDR2_MATRIXI_CLIP 0x38BA

Bit(s)	R/W	Default	Description
19:8	R/W	0	comp_th : // unsigned , default = 0
7:5	R/W	0	conv_rs : // unsigned , default = 0
4:3	R/W	0	clmod : // unsigned , default = 0

Table 10-2710 OSD1_HDR2_MATRIXO_CLIP 0x38BB

Bit(s)	R/W	Default	Description
19:8	R/W	0	comp_th : // unsigned , default = 0
7:5	R/W	0	conv_rs : // unsigned , default = 0
4:3	R/W	0	clmod : // unsigned , default = 0

Table 10-2711 OSD1_HDR2_CGAIN_OFFT 0x38BC

Bit(s)	R/W	Default	Description
26:16	R/W	0	reg_cgain_oft2 : // signed , default = 0
10:0	R/W	0	reg_cgain_oft1 : // signed , default = 0

Table 10-2712 OSD1_EOTF_LUT_ADDR_PORT 0x38be

Bit(s)	R/W	Default	Description
7:0	R/W	0	eotf_lut_addr : // unsigned , default = 0

Table 10-2713 OSD1_EOTF_LUT_DATA_PORT 0x38bf

Bit(s)	R/W	Default	Description
19:0	R/W	0	eotf_lut_data : // unsigned , default = 0

Table 10-2714 OSD1_OETF_LUT_ADDR_PORT 0x38c0

Bit(s)	R/W	Default	Description
7:0	R/W	0	oetf_lut_addr : // unsigned , default = 0

Table 10-2715 OSD1_OETF_LUT_DATA_PORT 0x38c1

Bit(s)	R/W	Default	Description
11:0	R/W	0	oetf_lut_data : // unsigned , default = 0

Amlogic Proprietary and Confidential
Copyright © Amlogic. All rights reserved.

Table 10-2716 OSD1_CGAIN_LUT_ADDR_PORT 0x38c2

Bit(s)	R/W	Default	Description
7:0	R/W	0	cgain_lut_addr : // unsigned , default = 0

Table 10-2717 OSD1_CGAIN_LUT_DATA_PORT 0x38c3

Bit(s)	R/W	Default	Description
11:0	R/W	0	cgain_lut_data : // unsigned , default = 0

Table 10-2718 OSD1_HDR2_CGAIN_COEF0 0x38c4

Bit(s)	R/W	Default	Description
27:16	R/W	0	reg_cgain_coef1 : // unsigned , default = 0
11:0	R/W	0	reg_cgain_coef0 : //unsigned , default = 0

Table 10-2719 OSD1_HDR2_CGAIN_COEF1 0x38c5

Bit(s)	R/W	Default	Description
11:0	R/W	0	reg_cgain_coef2 : // unsigned , default = 0

Table 10-2720 OSD1_OGAIN_LUT_ADDR_PORT 0x38c6

Bit(s)	R/W	Default	Description
7:0	R/W	0	ogain_lut_addr : // unsigned , default = 0

Table 10-2721 OSD1_OGAIN_LUT_DATA_PORT 0x38c7

Bit(s)	R/W	Default	Description
11:0	R/W	0	ogain_lut_data : // unsigned , default = 0

Table 10-2722 OSD1_HDR2_ADPS_CTRL 0x38c8

Bit(s)	R/W	Default	Description
6	R/W	1	reg_adpscl_bypass2 : // unsigned , default = 1
5	R/W	1	reg_adpscl_bypass1 : // unsigned , default = 1
4	R/W	1	reg_adpscl_bypass0 : // unsigned , default = 1
1:0	R/W	1	reg_adpscl_mode : // unsigned , default = 1

Amlogic Proprietary and Confidential
Copyright © Amlogic. All rights reserved.

Table 10-2723 OSD1_HDR2_ADPS_ALPHA0 0x38c9

Bit(s)	R/W	Default	Description
29:16	R/W	0x1000	reg_adpscl_alpha1 : // unsigned , default = 0x1000
13:0	R/W	0x1000	reg_adpscl_alpha0 : // unsigned , default = 0x1000

Table 10-2724 OSD1_HDR2_ADPS_ALPHA1 0x38ca

Bit(s)	R/W	Default	Description
27:24	R/W	0xc	reg_adpscl_shift0 : // unsigned , default = 0xc
23:20	R/W	0xc	reg_adpscl_shift1 : // unsigned , default = 0xc
19:16	R/W	0xc	reg_adpscl_shift2 : // unsigned , default = 0xc
13:0	R/W	0x1000	reg_adpscl_alpha2 : // unsigned , default = 0x1000

Table 10-2725 OSD1_HDR2_ADPS_BETA0 0x38cb

Bit(s)	R/W	Default	Description
20	R/W	0	reg_adpscl_beta0_s : // unsigned , default = 0
19:0	R/W	0xfc000	reg_adpscl_beta0 : // unsigned , default = 0xfc000

Table 10-2726 OSD1_HDR2_ADPS_BETA1 0x38cc

Bit(s)	R/W	Default	Description
20	R/W	0	reg_adpscl_beta1_s : // unsigned , default = 0
19:0	R/W	0xfc000	reg_adpscl_beta1 : // unsigned , default = 0xfc000

Table 10-2727 OSD1_HDR2_ADPS_BETA2 0x38cd

Bit(s)	R/W	Default	Description
20	R/W	0	reg_adpscl_beta2_s : // unsigned , default = 0
19:0	R/W	0xfc000	reg_adpscl_beta2 : // unsigned , default = 0xfc000

Table 10-2728 OSD1_HDR2_ADPS_COEF0 0x38ce

Bit(s)	R/W	Default	Description
27:16	R/W	460	reg_adpscl_ys_coef1 : // unsigned , default = 460
11:0	R/W	1188	reg_adpscl_ys_coef0 : // unsigned , default = 1188

Table 10-2729 OSD1_HDR2_ADPS_COEF1 0x38cf

Bit(s)	R/W	Default	Description
11:0	R/W	104	reg_adpscl_ys_coef2 : // unsigned , default = 104

Amlogic Proprietary and Confidential
Copyright © Amlogic. All rights reserved.

Table 10-2730 OSD1_HDR2_GMUT_CTRL 0x38d0

Bit(s)	R/W	Default	Description
3:0	R/W	14	reg_gmut_shift : // unsigned , default = 14

Table 10-2731 OSD1_HDR2_GMUT_COEF0 0x38d1

Bit(s)	R/W	Default	Description
31:16	R/W	674	reg_gmut_coef01 : // unsigned , default = 674
15:0	R/W	1285	reg_gmut_coef00 : // unsigned , default = 1285

Table 10-2732 OSD1_HDR2_GMUT_COEF1 0x38d2

Bit(s)	R/W	Default	Description
31:16	R/W	142	reg_gmut_coef10 : // unsigned , default = 142
15:0	R/W	89	reg_gmut_coef02 : // unsigned , default = 89

Table 10-2733 OSD1_HDR2_GMUT_COEF2 0x38d3

Bit(s)	R/W	Default	Description
31:16	R/W	23	reg_gmut_coef12 : // unsigned , default = 23
15:0	R/W	1883	reg_gmut_coef11 : // unsigned , default = 1883

Table 10-2734 OSD1_HDR2_GMUT_COEF3 0x38d4

Bit(s)	R/W	Default	Description
31:16	R/W	180	reg_gmut_coef21 : // unsigned , default = 180
15:0	R/W	34	reg_gmut_coef20 : // unsigned , default = 34

Table 10-2735 OSD1_HDR2_GMUT_COEF4 0x38d5

Bit(s)	R/W	Default	Description
15:0	R/W	1834	reg_gmut_coef22 : // unsigned , default = 1834

Table 10-2736 OSD1_HDR2_PIPE_CTRL1 0x38d6

Bit(s)	R/W	Default	Description
31:24	R/W	4	vblank_num_oetf : // unsigned , default = 4
23:16	R/W	4	hblank_num_oetf : // unsigned , default = 4
15:8	R/W	10	vblank_num_eotf : // unsigned , default = 10
7:0	R/W	10	hblank_num_eotf : // unsigned , default = 10

Amlogic Proprietary and Confidential
Copyright © Amlogic. All rights reserved.

Table 10-2737 OSD1_HDR2_PIPE_CTRL2 0x38d7

Bit(s)	R/W	Default	Description
31:24	R/W	10	vblank_num_cgain : // unsigned , default = 10
23:16	R/W	10	hblank_num_cgain : // unsigned , default = 10
15:8	R/W	11	vblank_num_gmut : // unsigned , default = 11
7:0	R/W	11	hblank_num_gmut : // unsigned , default = 11

Table 10-2738 OSD1_HDR2_PIPE_CTRL3 0x38d8

Bit(s)	R/W	Default	Description
31:24	R/W	22	vblank_num_adps : // unsigned , default = 22
23:16	R/W	2	hblank_num_adps : // unsigned , default = 2
15:8	R/W	4	vblank_num_uv : // unsigned , default = 4
7:0	R/W	4	hblank_num_uv : // unsigned , default = 4

Table 10-2739 OSD1_HDR2_PROC_WIN1 0x38d9

Bit(s)	R/W	Default	Description
28:16	R/W	0	proc_win_h_ed : // unsigned , default = 0
12:0	R/W	0	proc_win_h_st : // unsigned , default = 0

Table 10-2740 OSD1_HDR2_PROC_WIN2 0x38da

Bit(s)	R/W	Default	Description
31	R/W	0	proc_win_gmut_en : // unsigned , default = 0
30	R/W	0	proc_win_adps_en : // unsigned , default = 0
29	R/W	0	proc_win_cgain_en : // unsigned , default = 0
28:16	R/W	0	proc_win_v_ed : // unsigned , default = 0
12:0	R/W	0	proc_win_v_st : // unsigned , default = 0

Table 10-2741 OSD1_HDR2_MATRIXI_EN_CTRL 0x38db

Bit(s)	R/W	Default	Description
5:4	R/W	0	matrix_gclk_ctrl : // unsigned , default = 0
1	R/W	0	enable_sync_sel : // unsigned , default = 0
0	R/W	0	matrix_conv_en : // unsigned , default = 0

Amlogic Proprietary and Confidential
Copyright © Amlogic. All rights reserved.

Table 10-2742 OSD1_HDR2_MATRIXO_EN_CTRL 0x38dc

Bit(s)	R/W	Default	Description
5:4	R/W	0	matrix_gclk_ctrl : // unsigned , default = 0
1	R/W	0	enable_sync_sel : // unsigned , default = 0
0	R/W	0	matrix_conv_en : // unsigned , default = 0

Table 10-2743 OSD1_HDR2_HIST_H_START_END 0x38dd

Bit(s)	R/W	Default	Description
28-16	R/W	0	hist h start
12-0	R/W	0	hist h end

Table 10-2744 OSD1_HDR2_HIST_V_START_END 0x38de

Bit(s)	R/W	Default	Description
28-16	R/W	0	hist v start
12-0	R/W	0	hist v end

Table 10-2745 OSD1_HDR2_HIST_V_START_END 0x38df

Bit(s)	R/W	Default	Description
28-16	R/W	0	hist v start
12-0	R/W	0	hist v end

Table 10-2746 OSD1_HDR2_HIST_RD 0x38e0

Bit(s)	R/W	Default	Description
23-0	R	0	hist 128 bin result

10.2.3.42 VDIN Registers

Table 10-2747 VDIN_TOP_DOUBLE_CTRL 0x410b

Bit(s)	R/W	Default	Description
26-24	R/W	5	Vdin1_interrupt mask
22-20	R/W	5	Vdin0_interrupt mask

Amlogic Proprietary and Confidential
Copyright © Amlogic. All rights reserved.

Bit(s)	R/W	Default	Description
19-16	R/W	0x0	Done flag clear
15-0	R/W	0x310	Vdin reorder sel : Bit3:0 afbce sel 0:disable 1:vdin0 normal 2:vdin0 small 3:vdin1 normal 4:vdin1 small Bit7:4 vdin0 wr mif sel 0:disable 1:vdin0 normal 2:vdin0 small 3:vdin1 normal 4: vdin1 small Bit11:8 vdin1 wr mif sel 0:disable 1:vdin0 normal 2:vdin0 small 3:vdin1 normal 4: vdin1 small Bit15:12 vdin2 wr mif sel 0:disable 1:vdin0 normal 2:vdin0 small 3:vdin1 normal 4:vdin1 small

Table 10-2748 VDIN_TOP_MISC 0x410d

Bit(s)	R/W	Default	Description
31-26	R/W	0	Sw_reset
18-16	R/W	3	Vdin0_wr_out_ctrl
15	R/W	0	Vdin line int sel: 1:vdin1 line int 0:vdin0 line int
14	R/W	0	Vid2 irq_sel : 1:afbce frm end 0:vid2 write mif done
13-12	R/W	0	Vdin2 fix disable
11-10	R/W	0	Vdin1_fix_disable
9-8	R/W	0	Vdin0_fix_disable
7-4	R/W	0	Vdin arb gclk ctrl
3-2	R/W	0	Afbce gclk ctrl
1	R/W	0	Afbce path sel: 0:vdin 1:di
0	R/W	0	Ldim stts path sel : 0:vdin0 1:vdin1

VDIN0_SCALE_COEF_IDX 0x1200

VDIN0_SCALE_COEF 0x1201

Table 10-2749 VDIN0_COM_CTRL0 0x1202

Bit(s)	R/W	Default	Description
31	R/W	0	mpeg_to_vdin_sel, 0: mpeg source to NR directly, 1: mpeg source pass through here
30	R/W	0	mpeg_field info which can be written by software
29	R/W	0	force go_field, pulse signal
28	R/W	0	force go_line, pulse signal
27	R/W	0	enable mpeg_go_field input signal
26-20	R/W	0	hold lines
19	R/W	0	delay go_field function enable
18-12	R/W	0	delay go_field line number
11-10	R/W	0	component2 output switch, 00: select component0 in, 01: select component1 in, 10: select component2 in

Amlogic Proprietary and Confidential
Copyright © Amlogic. All rights reserved.

Bit(s)	R/W	Default	Description
9-8	R/W	0	component1 output switch, 00: select component0 in, 01: select component1 in, 10: select component2 in
7-6	R/W	0	component0 output switch, 00: select component0 in, 01: select component1 in, 10: select component2 in
5	R/W	0	input window selection function enable
4	R/W	0	enable VDIN common data input, otherwise there will be no video data input
3-0	R/W	0	vdin selection, 1: mpeg_in from dram; 2: bt656 input; 3: Reserved (component input); 4: Reserved(tvdecoder input); 5: Reserved(hdmi rx input); 6: reserved(digital video input); 7: Wr_back 0; 8: reserved(MIPI CSI2) ; 9: Wr_back 1; 10: Reserved(second bt656 input); otherwise no input.

Table 10-2750 VDIN0_ACTIVE_MAX_PIX_CNT_STATUS 0x1203

Bit(s)	R/W	Default	Description
28-16	R	0	active_max_pix_cnt, readonly
12-0	R	0	active_max_pix_cnt_shadow, readonly

Table 10-2751 VDIN0_LCNT_STATUS 0x1204

Bit(s)	R/W	Default	Description
28-16	R	0	go_line_cnt, readonly
12-0	R	0	active_line_cnt, readonly

Table 10-2752 VDIN0_COM_STATUS0 0x1205

Bit(s)	R/W	Default	Description
17	R	0	Vid_wr_pending_ddr_wrrsp
16	R	0	Curr_pic_sec
15	R	0	Curr_pic_sec_sav
14-3	R	0	lfifo_buf_cnt
2	R	0	vdin_direct_done status
1	R	0	vdin_nr_done status
0	R	0	field

Table 10-2753 VDIN0_COM_STATUS1 0x1206

Bit(s)	R/W	Default	Description
31	R	0	vdi4 fifo overflow
29-24	R	0	vdi3_asfifo_cnt
23	R	0	vdi3 fifo overflow
21-16	R	0	vdi3_asfifo_cnt

Amlogic Proprietary and Confidential
Copyright © Amlogic. All rights reserved.

Bit(s)	R/W	Default	Description
15	R	0	vdi2 fifo overflow
13-8	R	0	vdi2_asfifo_cnt
7	R	0	vdi1 fifo overflow
5-0	R	0	vdi1_asfifo_cnt

Table 10-2754 VDIN0_LCNT_SHADOW_STATUS 0x1207

Bit(s)	R/W	Default	Description
28-16	R	0	go_line_cnt_shadow, readonly
12-0	R	0	active_line_cnt_shadow, readonly

Table 10-2755 VDIN0_ASFIFO_CTRL0 0x1208

Bit(s)	R/W	Default	Description
31	R/W	0	hv size select 0: write mif size 1:vdin hsc input size
30-28	R/W	0	v de start line number
27-20	R/W	0	v blank
19-12	R/W	0	h blank
10-9	R/W	0	bist pattern 0:horizontal gray scale 1: vertical gray scale 2/3:random data
8	R/W	0	Vdin bist enable : replace vdi6 (loop back path)
7	R/W	0	Vdi1 DE enable
6	R/W	0	Vdi1 go field enable
5	R/W	0	Vdi1 go line enable
4	R/W	0	Vdi1 if true, negative active input vsync
3	R/W	0	Vdi1 if true, negative active input hsync
2	R/W	0	Vdi1 vsync soft reset fifo enable
1	R/W	0	Vdi1 overflow status clear
0	R/W	0	Vdi1 asfifo soft reset, level signal

Table 10-2756 VDIN0_ASFIFO_CTRL1 0x1209

Bit(s)	R/W	Default	Description
23	R/W	0	Vdi4 DE enable
22	R/W	0	Vdi4 go field enable
21	R/W	0	Vdi4 go line enable
20	R/W	0	Vdi4 if true, negative active input vsync
19	R/W	0	Vdi4 if true, negative active input hsync
18	R/W	0	Vdi4 vsync soft reset fifo enable
17	R/W	0	Vdi4 overflow status clear

Amlogic Proprietary and Confidential
Copyright © Amlogic. All rights reserved.

Bit(s)	R/W	Default	Description
16	R/W	0	Vdi4 asfifo soft reset, level signal
7	R/W	0	Vdi3 DE enable
6	R/W	0	Vdi3 go field enable
5	R/W	0	Vdi3 go line enable
4	R/W	0	Vdi3 if true, negative active input vsync
3	R/W	0	Vdi3 if true, negative active input hsync
2	R/W	0	Vdi3 vsync soft reset fifo enable
1	R/W	0	Vdi3 overflow status clear
0	R/W	0	Vdi3 asfifo soft reset, level signal

Table 10-2757 VDIN0_WIDTHM1I_WIDTHM1O 0x120a

Bit(s)	R/W	Default	Description
28-16	R/W	0	input width minus 1, after the window function
12-0	R/W	0	output width minus 1

Table 10-2758 VDIN0_SC_MISC_CTRL 0x120b

Bit(s)	R/W	Default	Description
14-8	R/W	0	hsc_ini_pixi_ptr, signed data, only useful when short_lineo_en is true
7	R/W	0	prehsc_en
6	R/W	0	hsc_en
5	R/W	0	hsc_short_lineo_en, short line output enable
4	R/W	0	hsc_nearest_en
3	R/W	0	Hsc_phase0_always_en
2-0	R/W	0	hsc_bank_length

Table 10-2759 VDIN0_HSC_PHASE_STEP 0x120c

Bit(s)	R/W	Default	Description
28-24	R/W	0	integer portion
23-0	R/W	0	fraction portion

Table 10-2760 VDIN0_HSC_INI_CTRL 0x120d

Bit(s)	R/W	Default	Description
30-29	R/W	0	hscale rpt_p0_num
28-24	R/W	0	hscale ini_rcv_num
23-0	R/W	0	hscale ini_phase

Amlogic Proprietary and Confidential
Copyright © Amlogic. All rights reserved.

Table 10-2761 VDIN0_COM_STATUS2 0x120e

Bit(s)	R/W	Default	Description
23	R	0	Vdi7 fifo overflow
21-16	R	0	Vdi7_asfifo_cnt
15	R	0	Vdi6 fifo overflow
13-8	R	0	Vdi6_asfifo_cnt
7	R	0	vdi5 fifo overflow
5-0	R	0	vdi5_asfifo_cnt

Table 10-2762 VDIN0_ASFIFO_CTRL2 0x120f

Bit(s)	R/W	Default	Description
25	R/W	0	if true, decimation counter sync with first valid DE in the field, //otherwise the decimation counter is not sync with external signal
24	R/W	0	decimation de enable
23-20	R/W	0	decimation phase, which counter value use to decimate,
19-16	R/W	0	decimation number, 0: not decimation, 1: decimation 2, 2: decimation 3 ....
7	R/W	0	Vdi5 DE enable
6	R/W	0	Vdi5 go field enable
5	R/W	0	Vdi5 go line enable
4	R/W	0	Vdi5 if true, negative active input vsync
3	R/W	0	Vdi5 if true, negative active input hsync
2	R/W	0	Vdi5 vsync soft reset fifo enable
1	R/W	0	Vdi5 overflow status clear
0	R/W	0	Vdi5 asfifo soft reset, level signal

Table 10-2763 VDIN0_MATRIX_CTRL 0x1210

Bit(s)	R/W	Default	Description
7	R/W	0	highlight_enable
6	R/W	0	probe_post, if true, probe pixel data after matrix, otherwise probe pixel data before matrix
5-4	R/W	0	probe_sel, 00: select matrix 0, 01: select matrix 1, otherwise select nothing
3-2	R/W	0	matrix coef idx selection, 00: select mat0, 01: select mat1, otherwise slect nothing
1	R/W	0	mat1 conversion matrix enable
0	R/W	0	Mat0 conversion matrix enable

Amlogic Proprietary and Confidential
Copyright © Amlogic. All rights reserved.

Table 10-2764 VDIN0_MATRIX_COEF00_01 0x1211

Bit(s)	R/W	Default	Description
28-16	R/W	0	coef00
12-0	R/W	0	coef01

Table 10-2765 VDIN0_MATRIX_COEF02_10 0x1212

Bit(s)	R/W	Default	Description
28-16	R/W	0	coef02
12-0	R/W	0	Coef10

Table 10-2766 VDIN0_MATRIX_COEF11_12 0x1213

Bit(s)	R/W	Default	Description
28-16	R/W	0	Coef11
12-0	R/W	0	Coef12

Table 10-2767 VDIN0_MATRIX_COEF20_21 0x1214

Bit(s)	R/W	Default	Description
28-16	R/W	0	Coef20
12-0	R/W	0	coef21

Table 10-2768 VDIN0_MATRIX_COEF22 0x1215

Bit(s)	R/W	Default	Description
18-16	R/W	0	convrs
7-0	R/W	0	Coef22

Table 10-2769 VDIN0_MATRIX_OFFSET0_1 0x1216

Bit(s)	R/W	Default	Description
26-16	R/W	0	offset0
10-0	R/W	0	Offset1

Table 10-2770 VDIN0_MATRIX_OFFSET2 0x1217

Bit(s)	R/W	Default	Description
10-0	R/W	0	Offset2

Amlogic Proprietary and Confidential
Copyright © Amlogic. All rights reserved.

Table 10-2771 VDIN0_MATRIX_PRE_OFFSET0_1 0x1218

Bit(s)	R/W	Default	Description
26-16	R/W	0	Pre_offset0
10-0	R/W	0	Pre_Offset1

Table 10-2772 VDIN0_MATRIX_PRE_OFFSET2 0x1219

Bit(s)	R/W	Default	Description
10-0	R/W	0	Pre_Offset2

Table 10-2773 VDIN0_LFIFO_CTRL 0x121a

Bit(s)	R/W	Default	Description
31	R/W	1	Linebuffer soft reset enable
30	R/W	1	Frame reset enable
28	R/W	0	Discard data enable
18	R/W	0	Vdin channel1 output enable : small size , with hshrink vshrink
17	R/W	1	Vdin channel0 output enable : normal size
16	R/W	0	Pps_path_sel : 0: pps before linebuffer 1:pps after linebuffer
13-0	R/W	0x1000	lfifo_buf_size

Table 10-2774 VDIN0_COM_GCLK_CTRL 0x121b

Bit(s)	R/W	Default	Description
15-14	R/W	0	Gate clock control for blackbar detector
13-12	R/W	0	Gate clock control for hist
11-10	R/W	0	Gate clock control for line fifo
9-8	R/W	0	Gate clock control for matrix
7-6	R/W	0	Gate clock control for horizontal scaler
5-4	R/W	0	Gate clock control for pre scaler
3-2	R/W	0	Gate clock control for vdin_com_proc
1-0	R/W	0	Gate clock control for the vdin reg

Table 10-2775 VDIN0_INTF_WIDTHM1 0x121c

Bit(s)	R/W	Default	Description
12-0	R/W	0	VDIN input interface width minus 1, before the window function, after the de decimation

Amlogic Proprietary and Confidential
Copyright © Amlogic. All rights reserved.

Table 10-2776 VDIN0_WR_CTRL2 0x121f

Bit(s)	R/W	Default	Description
19	R/W	0	Vdin0 wr bit10 mode
18	R/W	0	Data_ext_en 1: send out data if req was interrupt by soft reset 0 : normal mode
17:16	R/W	1	Words lim[1:0] : it would not send out request before Words_lim *16 words were ready
15:12	R/W	1	Burst_ lim : 00 , 1 word in 1burst , 01 ,2 words in 1burst, 10, 4 words in 1burst , 11 reserved
10:9	R/W	0	Words_lim[3:2]
8	R/W	0	1: discard data before line fifo, 0: normal mode
7-0	R/W	0	Write chroma canvas address, for NV12/21 mode.

Table 10-2777 VDIN0_WR_CTRL 0x1220

Bit(s)	R/W	Default	Description
31:30	R/W	0	vdin0_wr_mif_hconv_mode. Applicable only to vdin_write_format=0 or 2. 0=Output every even pixel's CbCr; 1=Output every odd pixel's CbCr; 2=Output an average value per even pair of pixels; 3=Output all CbCr. Only applys to vdin_write_format =2.
29	R/W	0	vdin0_wr_mif_no_clk_gate. If true, enable free-run clock.
28	R/W	0	clear write response counter in the vdin write memory interface
27	R/W	1	eol_sel, 1: use eol as the line end indication, 0: use width as line end indication in the vdin write memory interface
26	R/W	0	vcp_nr_en. Only used in VDIN0. NOT used in VDIN1
25	R/W	1	vcp_wr_en Only used in VDIN0. NOT used in VDIN1
24	R/W	1	vcp_in_en Only used in VDIN0. NOT used in VDIN1
23	R/W	1	vdin frame reset enble, if true, it will provide frame reset during go_field(vsync) to the modules after that
22	R/W	1	vdin line fifo soft reset enable, meaning, if true line fifo will reset during go_field (vsync)
21	R/W	0	vdin direct write done status clear bit
20	R/W	0	vdin NR write done status clear bit
19	R/W	0	Vdin0_wr words swap : swap the 2 64bits word in 128 words
18	R/W	0	vdin0_wr_mif_swap_cbcr. Applicable only to vdin_write_format =2. 0=Output CbCr (NV12); 1=Output CrCb (NV21);
17:16	R/W	0	vdin0_wr_mif_vconv_mode. Applicable only to vdin_write_format=2. 0=Output every even line's CbCr; 1=Output every odd line's CbCr; 2=Reserved; 3=Output all CbCr.
13-12	R/W	0	vdin_write_format, 0: 4:2:2 to one canvas; 1: 4:4:4 to one canvas; 2: Y to luma canvas, CbCr to chroma canvas, for NV12/21; 3: yuv422 full pack mode
11	R/W	0	vdin write canvas double buffer enable, means the canvas address will be latched by vsync before using

Amlogic Proprietary and Confidential
Copyright © Amlogic. All rights reserved.

Bit(s)	R/W	Default	Description
9	R/W	0	vdin write request urgent
8	R/W	0	vdin write request enable
7-0	R/W	0	Write canvas address (For NV12/21 mode, it's LUMA canvas)

Table 10-2778 VDIN0_WR_H_START_END 0x1221

Bit(s)	R/W	Default	Description
29	R/W	0	if true, horizontal reverse
28-16	R/W	0	start
12-0	R/W	0	end

Table 10-2779 VDIN0_WR_V_START_END 0x1222

Bit(s)	R/W	Default	Description
29	R/W	0	if true, vertical reverse
28-16	R/W	0	start
12-0	R/W	0	end

Table 10-2780 VDIN0_VSC_PHASE_STEP 0x1223

Bit(s)	R/W	Default	Description
24-16	R/W	0	integer portion
19-0	R/W	0	fraction portion

Table 10-2781 VDIN0_VSC_INI_CTRL 0x1224

Bit(s)	R/W	Default	Description
23	R/W	0	vsc_en, vertical scaler enable
21	R/W	0	vsc_phase0_always_en, when scale up, you have to set it to 1
20-16	R/W	0	ini skip_line_num
15-0	R/W	0	vscaler ini_phase

Table 10-2782 VDIN0_SCIN_HEIGHTM1 0x1225

Bit(s)	R/W	Default	Description
28-16	R/W	0xc7	Vshrink output height m1
12-0	R/W	0x437	scaler input height minus 1

Amlogic Proprietary and Confidential
Copyright © Amlogic. All rights reserved.

Table 10-2783 VDIN0_DUMMY_DATA 0x1226

Bit(s)	R/W	Default	Description
23-16	R/W	0	dummy component 0
15-8	R/W	0x80	dummy component 1
7-0	R/W	0x80	dummy component 2

Table 10-2784 VDIN0_MATRIX_PROBE_COLOR 0x1228

Bit(s)	R/W	Default	Description
29-20	R/W	0	component 0
19-10	R/W	0	omponent 1
9-0	R/W	0	component 2

Table 10-2785 VDIN0_MATRIX_HL_COLOR 0x1229

Bit(s)	R/W	Default	Description
23-16	R/W	0	component 0
15-8	R/W	0	component 1
7-0	R/W	0	component 2

Table 10-2786 VDIN0_MATRIX_PROBE_POS 0x122a

Bit(s)	R/W	Default	Description
28-16	R/W	0	probe x, position
12-0	R/W	0	probe y, postion

Table 10-2787 VDIN0_HIST_CTRL 0x1230

Bit(s)	R/W	Default	Description
31-24	R/W	0	No use
23-16	R/W	0	No use
11	R/W	0	Hist 34bin only mode
10-9	R/W	0	ldim_stts_din_sel, 00: from matrix0 dout, 01: from vsc_dout, 10: from matrix1 dout, 11: form matrix1 din
8	R/W	0	ldim_stts_en
6-5	R/W	0	hist_dnlp_low the real pixels in each bins got by VDIN_DNLP_HISTXX should multiple with 2^(dnlp_low+3)
4-2	R/W	0	hist_din_sel the source used for hist statistics. 2'b00: from MAT0_dout; 2'b01: from vsc_dout; 2'b10: from mat1_dout, 3: mat1_din 4: hdr2 dout
1	R/W	0	hist_win_en 1'b0: hist used for full picture; 1'b1: hist used for pixels within hist window
0	R/W	0	hist_spl_en 1'b0: disable hist readback; 1'b1: enable hist readback

Amlogic Proprietary and Confidential
Copyright © Amlogic. All rights reserved.

Table 10-2788 VDIN0_HIST_H_START_END 0x1231

Bit(s)	R/W	Default	Description
28-16	R/W	0	hist_hstart horizontal start value to define hist window
12-0	R/W	0	hist_hend horizontal end value to define hist window

Table 10-2789 VDIN0_HIST_V_START_END 0x1232

Bit(s)	R/W	Default	Description
28-16	R/W	0	hist_vstart vertical start value to define hist window
12-0	R/W	0	hist_vend vertical end value to define hist window

Table 10-2790 VDIN0_HIST_MAX_MIN 0x1233

Bit(s)	R/W	Default	Description
15-8	R	0	hist_max maximum value
7-0	R	0	hist_min minimum value

Table 10-2791 VDIN0_HIST_SPL_VAL 0x1234

Bit(s)	R/W	Default	Description
31-0	R	0	hist_spl_rd , counts for the total luma value

Table 10-2792 VDIN0_HIST_SPL_PIX_CNT 0x1235

Bit(s)	R/W	Default	Description
21-0	R	0	hist_spl_pixel_count, counts for the total calculated pixels

Table 10-2793 VDIN0_HIST_CHROMA_SUM 0x1236

Bit(s)	R/W	Default	Description
31-0	R	0	hist_chroma_sum , counts for the total chroma value

Table 10-2794 VDIN0_DNLP_HIST00 0x1237

0-255 are split to 64 bins evenly, and VDIN_DNLP_HISTXX

They are the statistic numbers of pixels that within each bin.

Bit(s)	R/W	Default	Description
31-16	R	0	counts for the 2nd bin
15-0	R	0	counts for the 1st bin

Amlogic Proprietary and Confidential
Copyright © Amlogic. All rights reserved.

Table 10-2795 VDIN0_DNLP_HIST01 0x1238

Bit(s)	R/W	Default	Description
31-16	R	0	counts for the 4th bin
15-0	R	0	counts for the 3rd bin

Table 10-2796 VDIN0_DNLP_HIST02 0x1239

Bit(s)	R/W	Default	Description
31-16	R	0	counts for the 6th bin
15-0	R	0	counts for the 5th bin

Table 10-2797 VDIN0_DNLP_HIST03 0x123a

Bit(s)	R/W	Default	Description
31-16	R	0	counts for the 8th bin
15-0	R	0	counts for the 7th bin

Table 10-2798 VDIN0_DNLP_HIST04 0x123b

Bit(s)	R/W	Default	Description
31-16	R	0	counts for the 10th bin
15-0	R	0	counts for the 9th bin

Table 10-2799 VDIN0_DNLP_HIST05 0x123c

Bit(s)	R/W	Default	Description
31-16	R	0	counts for the 12th bin
15-0	R	0	counts for the 11th bin

Table 10-2800 VDIN0_DNLP_HIST06 0x123d

Bit(s)	R/W	Default	Description
31-16	R	0	counts for the 14th bin
15-0	R	0	counts for the 13th bin

Table 10-2801 VDIN0_DNLP_HIST07 0x123e

Bit(s)	R/W	Default	Description
31-16	R	0	counts for the 16th bin
15-0	R	0	counts for the 15th bin

Amlogic Proprietary and Confidential
Copyright © Amlogic. All rights reserved.

Table 10-2802 VDIN0_DNLP_HIST08 0x123f

Bit(s)	R/W	Default	Description
31-16	R	0	counts for the 18th bin
15-0	R	0	counts for the 17th bin

Table 10-2803 VDIN0_DNLP_HIST09 0x1240

Bit(s)	R/W	Default	Description
31-16	R	0	counts for the 20th bin
15-0	R	0	counts for the 19th bin

Table 10-2804 VDIN0_DNLP_HIST10 0x1241

Bit(s)	R/W	Default	Description
31-16	R	0	counts for the 22nd bin
15-0	R	0	counts for the 21st bin

Table 10-2805 VDIN0_DNLP_HIST11 0x1242

Bit(s)	R/W	Default	Description
31-16	R	0	counts for the 24th bin
15-0	R	0	counts for the 23rd bin

Table 10-2806 VDIN0_DNLP_HIST12 0x1243

Bit(s)	R/W	Default	Description
31-16	R	0	counts for the 26th bin
15-0	R	0	counts for the 25th bin

Table 10-2807 VDIN0_DNLP_HIST13 0x1244

Bit(s)	R/W	Default	Description
31-16	R	0	counts for the 28th bin
15-0	R	0	counts for the 27th bin

Table 10-2808 VDIN0_DNLP_HIST14 0x1245

Bit(s)	R/W	Default	Description
31-16	R	0	counts for the 30th bin
15-0	R	0	counts for the 29th bin

Amlogic Proprietary and Confidential
Copyright © Amlogic. All rights reserved.

Table 10-2809 VDIN0_DNLP_HIST15 0x1246

Bit(s)	R/W	Default	Description
31-16	R	0	counts for the 32nd bin
15-0	R	0	counts for the 31st bin

Table 10-2810 VDIN0_DNLP_HIST16 0x1247

Bit(s)	R/W	Default	Description
31-16	R	0	counts for the 34th bin
15-0	R	0	counts for the 33rd bin

Table 10-2811 VDIN0_DNLP_HIST17 0x1248

Bit(s)	R/W	Default	Description
31-16	R	0	counts for the 36th bin
15-0	R	0	counts for the 35th bin

Table 10-2812 VDIN0_DNLP_HIST18 0x1249

Bit(s)	R/W	Default	Description
31-16	R	0	counts for the 38th bin
15-0	R	0	counts for the 37th bin

Table 10-2813 VDIN0_DNLP_HIST19 0x124a

Bit(s)	R/W	Default	Description
31-16	R	0	counts for the 40th bin
15-0	R	0	counts for the 39th bin

Table 10-2814 VDIN0_DNLP_HIST20 0x124b

Bit(s)	R/W	Default	Description
31-16	R	0	counts for the 42nd bin
15-0	R	0	counts for the 41st bin

Table 10-2815 VDIN0_DNLP_HIST21 0x124c

Bit(s)	R/W	Default	Description
31-16	R	0	counts for the 44th bin
15-0	R	0	counts for the 43rd bin

Amlogic Proprietary and Confidential
Copyright © Amlogic. All rights reserved.

Table 10-2816 VDIN0_DNLP_HIST22 0x124d

Bit(s)	R/W	Default	Description
31-16	R	0	counts for the 46th bin
15-0	R	0	counts for the 45th bin

Table 10-2817 VDIN0_DNLP_HIST23 0x124e

Bit(s)	R/W	Default	Description
31-16	R	0	counts for the 48th bin
15-0	R	0	counts for the 47th bin

Table 10-2818 VDIN0_DNLP_HIST24 0x124f

Bit(s)	R/W	Default	Description
31-16	R	0	counts for the 50th bin
15-0	R	0	counts for the 49th bin

Table 10-2819 VDIN0_DNLP_HIST25 0x1250

Bit(s)	R/W	Default	Description
31-16	R	0	counts for the 52nd bin
15-0	R	0	counts for the 51st bin

Table 10-2820 VDIN0_DNLP_HIST26 0x1251

Bit(s)	R/W	Default	Description
31-16	R	0	counts for the 54th bin
15-0	R	0	counts for the 53rd bin

Table 10-2821 VDIN0_DNLP_HIST27 0x1252

Bit(s)	R/W	Default	Description
31-16	R	0	counts for the 56th bin
15-0	R	0	counts for the 55th bin

Table 10-2822 VDIN0_DNLP_HIST28 0x1253

Bit(s)	R/W	Default	Description
31-16	R	0	counts for the 58th bin
15-0	R	0	counts for the 57th bin

Amlogic Proprietary and Confidential
Copyright © Amlogic. All rights reserved.

Table 10-2823 VDIN0_DNLP_HIST29 0x1254

Bit(s)	R/W	Default	Description
31-16	R	0	counts for the 60th bin
15-0	R	0	counts for the 59th bin

Table 10-2824 VDIN0_DNLP_HIST30 0x1255

Bit(s)	R/W	Default	Description
31-16	R	0	counts for the 62nd bin
15-0	R	0	counts for the 61st bin

Table 10-2825 VDIN0_DNLP_HIST31 0x1256

Bit(s)	R/W	Default	Description
31-16	R	0	counts for the 64th bin
15-0	R	0	counts for the 63rd bin

Table 10-2826 VDIN0_WR_URGENT_CTRL 0x1257

Bit(s)	R/W	Default	Description
15	R/W	0	Auto urgent enable
14	R/W	0	Urgent write
9	R/W	0	Write done last sel
8	R/W	0	Reg bvalid enable
7-4	R/W	0	Up_threshold
3-0	R/W	0	Down threshold

Table 10-2827 VDIN0_RO_WRMIF_STATUS 0x1258

Bit(s)	R/W	Default	Description
20-18	R/W	0	C2 sel
17-15	R/W	0	C1 sel
14-12	R/W	0	C0 sel
11-9	R/W	0	Y2 sel
8-6	R/W	0	Y1 sel
5-3	R/W	0	Y0 sel
2	R/W	0	De tunnel enable
1	R	0	Di pre , nr done
0	R	0	Vdin write mif done

Amlogic Proprietary and Confidential
Copyright © Amlogic. All rights reserved.

Table 10-2828 VDIN0_LDIM_STTS_HIST_READ_REGION 0x1259

Bit(s)	R/W	Default	Description
29:20	R	0	Max_comp2
19:10	R	0	Max_comp1
9:0	R	0	Max_comp0

Table 10-2829 VDIN0_MEAS_CTRL0 0x125a

Bit(s)	R/W	Default	Description
18	R/W	0	reset bit, high active
17	R/W	0	if true, widen hs/vs pulse
16	R/W	0	vsync total counter always accumulating enable
15-12	R/W	0	select hs/vs of video input channel to measure, 0: no selection, 1 vdi1, 2: vid2: 3: vid3, 4:vid4, 5:vdi5, 6:vdi6, 7:vdi7, 8:vdi8, 9:vdi9.
11-4	R/W	0	vsync_span, define how many vsync span need to measure
2-0	R/W	0	meas_hs_index, index to select which HS counter/range

Table 10-2830 VDIN0_MEAS_VS_COUNT_HI 0x125b

Bit(s)	R/W	Default	Description
19-16	R	0	meas_ind_total_count_n, every number of sync_span vsyncs, this count add 1
15-0	R	0	high bit portion of vsync total counter

Table 10-2831 VDIN0_MEAS_VS_COUNT_LO 0x125c

Bit(s)	R/W	Default	Description
31-0	R	0	low bit portion of vsync total counter

Table 10-2832 VDIN0_MEAS_HS_RANGE 0x125d

//according to the meas_hs_index in register VDIN_MEAS_CTRL0 //meas_hs_index == 0, first hs range //meas_hs_index == 1, second hs range //meas_hs_index == 2, third hs range //meas_hs_index == 3, fourth hs range

Bit(s)	R/W	Default	Description
28-16	R	0	count_start
12-0	R	0	count_end

Table 10-2833 VDIN0_MEAS_HS_COUNT 0x125e

//according to the meas_hs_index in register VDIN_MEAS_CTRL0, //meas_hs_index == 0, first range hs counter, //meas_hs_index == 1, second range hs //meas_hs_index == 2, third range hs //meas_hs_index == 3, fourth range hs

Amlogic Proprietary and Confidential
Copyright © Amlogic. All rights reserved.

Bit(s)	R/W	Default	Description
23-0	R	0	Hs counter

Table 10-2834 VDIN0_BLKBAR_CTRL1 0x125f

Bit(s)	R/W	Default	Description
8	R/W	0	white_enable
7-0	R/W	0	blkbar_white_level

Table 10-2835 VDIN0_BLKBAR_CTRL0 0x1260

Bit(s)	R/W	Default	Description
31-24	R/W	0	blkbar_black_level threshold to judge a black point
20-8	R/W	0	blkbar_hwidth left and right region width
7-5	R/W	0	blkbar_comp_sel select yin or uin or vin to be the valid input
4	R/W	0	blkbar_sw_statistic_en enable software statistic of each block black points number
3	R/W	0	blkbar_det_en
2-1	R/W	0	blkbar_din_sel, 0:mat0_dout, 1:vsc_dout, 2:mat1_dout, 3:mat1_din
0	R/W	0	Blkbar_det_top_en

Table 10-2836 VDIN0_BLKBAR_H_START_END 0x1261

Bit(s)	R/W	Default	Description
28-16	R/W	0	blkbar_hstart. Left region start
12-0	R/W	0	blkbar_hend. Right region end

Table 10-2837 VDIN0_BLKBAR_V_START_END 0x1262

Bit(s)	R/W	Default	Description
28-16	R/W	0	blkbar_vstart.
12-0	R/W	0	blkbar_vend.

Table 10-2838 VDIN0_BLKBAR_CNT_THRESHOLD 0x1263

Bit(s)	R/W	Default	Description
19-0	R/W	0	blkbar_cnt_threshold. threshold to judge whether a block is totally black

Amlogic Proprietary and Confidential
Copyright © Amlogic. All rights reserved.

Table 10-2839 VDIN0_BLKBAR_ROW_TH1_TH2 0x1264

Bit(s)	R/W	Default	Description
28-16	R/W	0	blkbar_row_th1. //threshold of the top blackbar
12-0	R/W	0	blkbar_row_th2 //threshold of the bottom blackbar

Table 10-2840 VDIN0_BLKBAR_IND_LEFT_START_END 0x1265

Bit(s)	R/W	Default	Description
28-16	R	0	blkbar_ind_left_start. horizontal start of the left region in the current searching
12-0	R	0	blkbar_ind_left_end. horizontal end of the left region in the current searching

Table 10-2841 VDIN0_BLKBAR_IND_RIGHT_START_END 0x1266

Bit(s)	R/W	Default	Description
28-16	R	0	blkbar_ind_right_start.horizontal start of the right region in the current searching
12-0	R	0	blkbar_ind_right_end. horizontal end of the right region in the current searching

Table 10-2842 VDIN0_BLKBAR_IND_LEFT1_CNT 0x1267

Bit(s)	R/W	Default	Description
19-0	R	0	blkbar_ind_left1_cnt. Black pixel counter. left part of the left region

Table 10-2843 VDIN0_BLKBAR_IND_LEFT2_CNT 0x1268

Bit(s)	R/W	Default	Description
19-0	R	0	blkbar_ind_left2_cnt. Black pixel counter. right part of the left region

Table 10-2844 VDIN0_BLKBAR_IND_RIGHT1_CNT 0x1269

Bit(s)	R/W	Default	Description
19-0	R	0	blkbar_ind_right1_cnt. Black pixel counter. left part of the right region

Table 10-2845 VDIN0_BLKBAR_IND_RIGHT2_CNT 0x126a

Bit(s)	R/W	Default	Description
19-0	R	0	blkbar_ind_right2_cnt. Black pixel counter. right part of the right region

Amlogic Proprietary and Confidential
Copyright © Amlogic. All rights reserved.

Table 10-2846 VDIN0_BLKBAR_STATUS0 0x126b

Bit(s)	R/W	Default	Description
29	R	0	blkbar_ind_black_det_done. LEFT/RIGHT Black detection done
28-16	R	0	blkbar_top_pos. Top black bar position
12-0	R	0	blkbar_bot_pos. Bottom black bar position

Table 10-2847 VDIN0_BLKBAR_STATUS1 0x126c

Bit(s)	R/W	Default	Description
28-16	R	0	blkbar_left_pos. Left black bar posiont
12-0	R	0	blkbar_right_pos. Right black bar position

Table 10-2848 VDIN0_WIN_H_START_END □□□ 0x126d

Bit(s)	R/W	Default	Description
28-16	R/W	0	input window H start
12-0	R/W	0	input window H end

Table 10-2849 VDIN0_WIN_V_START_END □□□ 0x126e

Bit(s)	R/W	Default	Description
28-16	R/W	0	input window V start
12-0	R/W	0	input window V end

Table 10-2850 VDIN0_ASFIFO_CTRL3 0x126f

Bit(s)	R/W	Default	Description
31	R/W	0	Vdi9 DE enable
30	R/W	0	Vdi9 go field enable
29	R/W	0	Vdi9 go line enable
28	R/W	0	Vdi9 if true, negative active input vsync
27	R/W	0	Vdi9 if true, negative active input hsync
26	R/W	0	Vdi9 vsync soft reset fifo enable
25	R/W	0	Vdi9 overflow status clear
24	R/W	0	Vdi9 asfifo soft reset, level signal
15	R/W	0	Vdi7 DE enable
14	R/W	0	Vdi7 go field enable
13	R/W	0	Vdi7 go line enable
12	R/W	0	Vdi7 if true, negative active input vsync
11	R/W	0	Vdi7 if true, negative active input hsync

Amlogic Proprietary and Confidential
Copyright © Amlogic. All rights reserved.

Bit(s)	R/W	Default	Description
10	R/W	0	Vdi7 vsync soft reset fifo enable
9	R/W	0	Vdi7 overflow status clear
8	R/W	0	Vdi7 asfifo soft reset, level signal
7	R/W	0	Vdi6 DE enable
6	R/W	0	Vdi6 go field enable
5	R/W	0	Vdi6 go line enable
4	R/W	0	Vdi6 if true, negative active input vsync
3	R/W	0	Vdi6 if true, negative active input hsync
2	R/W	0	Vdi6 vsync soft reset fifo enable
1	R/W	0	Vdi6 overflow status clear
0	R/W	0	Vdi6 asfifo soft reset, level signal

Table 10-2851 VDIN0_COM_GCLK_CTRL2 0x1270

Bit(s)	R/W	Default	Description
3-2	R/W	0	Vshrk_clk2 ctrl
1-0	R/W	0	Vshrk_clk1 ctrl

Table 10-2852 VDIN0_VSHRK_CTRL 0x1271

Bit(s)	R/W	Default	Description
27	R/W	0	Vshrk enable
26:25	R/W	0	Vshrk mode, 0: 1/2 shrink, 1: 1/4 shrink, 2: 1/8 shrink
24	R/W	0	Vshrink lpf mode, 1: 0.5,1.5,1.5,0.5 lpf for 1/4 shrink, 0.5,1.5,1.5...for 1/8 shrink
23:0	R/W	0	Vshrink padding dummy data

Table 10-2853 VDIN0_HIST32 0x1272

Bit(s)	R/W	Default	Description
31:0	R	0	Hist 32 mode, [31:16] for white pixel number, 15:0 for black pixel number

Table 10-2854 VDIN0_COM_STATUS3 0x1273

Bit(s)	R/W	Default	Description
7	R	0	Vdi9 fifo overflow
5:0	R	0	Vdi9 asfifo cnt

Amlogic Proprietary and Confidential
Copyright © Amlogic. All rights reserved.

Table 10-2855 VDIN0_SYNC_MASK 0x1274

Bit(s)	R/W	Default	Description
17	R/W	0	Vsync_mask_en
16	R/W	0	Hsync_mask_en
15-8	R/W	64	Vsync_mask_num: When vsync_mask_en=1, vdin_output_vsync will keep zero for vsync_mask_num*1024 vdin clock cycle after vdin_input_vsync pluse. Example: vdin_clock = 666MHz□vsync_mask_num=255, vdin out vsync will at least keep zero for 0.392ms after one input_vsync
7-0	R/W	64	Hsync_mask_num When hsync_mask_en=1, vdin_output_hsync will keep zero for hsync_mask_num*32 vdin clock cycle after vdin_input_vsync pluse

Table 10-2856 VDIN0_DOLBY_DSC_CTRL0 0x1275

Bit(s)	R/W	Default	Description
31	R/W	0	Dolby check enable
30	R/W	0	Tunnel swap mode enable
29-24	R/W	0	Soft reset control, 29 : dsc, 28~27: crc check, 26~24, reserved
16	R/W	0	Little endian mode
15-0	R/W	0	Monitor metadata position

Table 10-2857 VDIN0_DOLBY_DSC_CTRL1 0x1276

Bit(s)	R/W	Default	Description
31-16	R/W	0	Metadata pixel start position
7-0	R/W	0	Crc check control

Table 10-2858 VDIN0_DOLBY_DSC_CTRL2 0x1277

Bit(s)	R/W	Default	Description
31	R/W	0	Metadata read enable
30	R/W	0	Metadata read address auto-increment
29-20	R/W	0	Metadata sum
17-0	R/W	0	Tunnel mode channel selection

Table 10-2859 VDIN0_DOLBY_DSC_CTRL3 0x1278

Bit(s)	R/W	Default	Description
15-0	R/W	0	Select metadata position

Amlogic Proprietary and Confidential
Copyright © Amlogic. All rights reserved.

Table 10-2860 VDIN0_DOLBY_AXI_CTRL0 0x1279

Bit(s)	R/W	Default	Description
31	R/W	0	Memory read enable
30	R/W	0	AXI bus read enable
29	R/W	0	AXI write channel urgent
28	R/W	0	Pack mode little endian
27	R/W	0	AXI bus soft reset
26	R/W	0	Frame reset enable
25	R/W	0	Memory read protection enable
24-16	R/W	0	Memory read sum
15-8	R/W	0	AXI request hold line
7-6	R/W	0	AXI burst length
5	R/W	0	Frame buffer start
4	R/W	0	Buffer start
3-2	R/W	0	AXI status monitor control
1-0	R/W	0	awid

Table 10-2861 VDIN0_DOLBY_ AXI_CTRL1 0x127a

Bit(s)	R/W	Default	Description
31-0	R/W	0	Buffer start address

Table 10-2862 VDIN0_DOLBY_ AXI_CTRL2 0x127b

Bit(s)	R/W	Default	Description
31-16	R/W	0	Buffer size
15-0	R/W	0	Frame buffer size

Table 10-2863 VDIN0_DOLBY_ AXI_CTRL3 0x127c

Bit(s)	R/W	Default	Description
7-0	R/W	0	Hold cycle

Amlogic Proprietary and Confidential
Copyright © Amlogic. All rights reserved.

Table 10-2864 VDIN0_WRARB_MODE 0x12c0

Bit(s)	R/W	Default	Description
23:16	R/W	0	wrarb_sel : uns, default = 0 , wrarb_sel [0]==0 slave dc0 connect master port0 wrarb_sel[0]==1 slave dc0 connect master port1 wrarb_sel [1]==0 slave dc1 connect master port0 wrarb_sel[1]==1 slave dc1 connect master port1 wrarb_sel [2]==0 slave dc2 connect master port0 wrarb_sel[2]==1 slave dc2 connect master port1 wrarb_sel [3]==0 slave dc3 connect master port0 wrarb_sel[3]==1 slave dc3 connect master port1 wrarb_sel [4]==0 slave dc4 connect master port0 wrarb_sel[4]==1 slave dc3 connect master port1 wrarb_sel [5]==0 slave dc5 connect master port0 wrarb_sel[5]==1 slave dc3 connect master port1
8	R/W	0	wrarb_arb_mode : uns, default = 0 , wrarb_arb_mode[0] master port0 arb way,
1:0	R/W	0	wrarb_gate_clk_ctrl : uns, default = 0 , wrarb_gate_clk_ctrl[1:0] master port0 clk gate control

Table 10-2865 VDIN0_WRARB_REQEN_SLV 0x12c1

Bit(s)	R/W	Default	Description
7:0	R/W	0	wrarb_dc_req_en : unsigned , default = 0 wrarb_dc_req_en [0]: the slv0 req to mst port0 enable, wrarb_dc_req_en [1]: the slv1 req to mst port0 enable, wrarb_dc_req_en [2]: the slv2 req to mst port0 enable, wrarb_dc_req_en [0]: the slv0 req to mst port1 enable, wrarb_dc_req_en [1]: the slv1 req to mst port1 enable, wrarb_dc_req_en [2]: the slv2 req to mst port1 enable,

Table 10-2866 VDIN0_WRARB_WEIGH0_SLV 0x12C2

Bit(s)	R/W	Default	Description
29:0	R/W	0	wrdc_weigh_sxn : unsigned , default = 0 wrdc_weigh_sxn [0*6+:6]: the slv0 req weigh number wrdc_weigh_sxn [1*6+:6]: the slv1 req weigh number wrdc_weigh_sxn [2*6+:6]: the slv2 req weigh number wrdc_weigh_sxn [3*6+:6]: the slv3 req weigh number wrdc_weigh_sxn [4*6+:6]: the slv4 req weigh number

Table 10-2867 VDIN0_WRARB_WEIGH1_SLV 0x12C3

Bit(s)	R/W	Default	Description
17:0	R/W	0	wrdc_weigh_sxn : unsigned , default = 0 the slv5 req weigh number [0*6+:6],the slv6 req weighnumber [1*6+:6],the slv7 req weighnumber [2*6+:6],

Table 10-2868 VDIN0_RDWR_ARB_STATUS 0x12c4

Bit(s)	R/W	Default	Description
2	R.O	0	ro_wrarb_arb_busy : unsigned , default = 0
1	R/W	0x0	reserve :
0	R.O	0	ro_rdarb_arb_busy : unsigned , default = 0

Table 10-2869 VDIN0_ARB_DBG_CTRL 0x12c5

Bit(s)	R/W	Default	Description
31:0	R.O	0	ro_det_cmd_ctrl : unsigned , default = 0

Amlogic Proprietary and Confidential
Copyright © Amlogic. All rights reserved.

Table 10-2870 VDIN0_ARB_DBG_STAT 0x12C6

Bit(s)	R/W	Default	Description
31:0	R.O	0	ro_det_dbg_stat : unsigned , default = 0

Table 10-2871 VDIN0_CRC_CHK 0x12c9

Bit(s)	R/W	Default	Description
0	W	0	vdin crc check start (pulse)

Table 10-2872 VDIN0_RO_CRC 0x12ca

Bit(s)	R/W	Default	Description
31-0	R	0	vdin crc result (lock by go_field)

Table 10-2873 VDIN0_LINE_INT 0x12cb

Bit(s)	R/W	Default	Description
31	R	0	line interrupt flag
30	R	0	write done flag
17	R/W	0	clear line interrupt flag
16	R/W	0	clear write done interrupt flag
15	R/W	0	enable line interrupt
12-0	R/W	0	line interrupt number

Table 10-2874 VDIN0_DSC_CTRL 0x12d0

Bit(s)	R/W	Default	Description
9:4	R/W	36	reg_dithout_switch : ,uns, default = 36;//{2'h2,2'h1,2'h0}
3	R/W	1	reg_detunnel_en : ,uns, default = 1;
2	R/W	0	reg_detunnel_u_start : ,uns, default = 0;
1	R/W	1	reg_vdin_dith_en : ,uns, default = 1;
0	R/W	1	reg_descramble_en : ,uns, default = 1;

Table 10-2875 VDIN0_CFMT_CTRL 0x12d1

Bit(s)	R/W	Default	Description
8	R/W	0	reg_chfmt_rpt_pix : uns, default = 0 ; // if true, horizontal formatter use repeating to generete pixel, otherwise use bilinear interpolation
7:4	R/W	0	reg_chfmt_ini_phase : uns, default = 0 ; // horizontal formatter initial phase
3	R/W	0	reg_chfmt_rpt_p0_en : uns, default = 0 ; // horizontal formatter repeat pixel 0 enable

Amlogic Proprietary and Confidential
Copyright © Amlogic. All rights reserved.

Bit(s)	R/W	Default	Description
2:1	R/W	1	reg_chfmt_yc_ratio : uns, default = 1 ; // horizontal Y/C ratio, 00: 1:1, 01: 2:1, 10: 4:1
0	R/W	1	reg_chfmt_en : uns, default = 1 ; // horizontal formatter enable

Table 10-2876 VDIN0_CFMT_W 0x12d2

Bit(s)	R/W	Default	Description
28:16	R/W	1920	reg_chfmt_w : uns, default = 1920 ;horizontal formatter width
12:0	R/W	960	reg_cvfmt_w : uns, default = 960 ;vertical formatter width

Table 10-2877 VDIN0_SCB_CTRL0 0x12d3

Bit(s)	R/W	Default	Description
11	R/W	1	reg_444c422_gofield_en : uns, default = 1;
10	R/W	1	reg_tunnel_en : uns, default = 1;
9:4	R/W	36	reg_tunnel_outswitch : uns, default = 36;//{2'h2,2'h1,2'h0}
3:2	R/W	0	reg_444c422_mode : uns, default = 0; //0:left 1:right 2,3:avg
1	R/W	0	reg_444c422_bypass : uns, default = 0; 1:bypass

Table 10-2878 VDIN0_SCB_CTRL1 0x12d4

Bit(s)	R/W	Default	Description
28:16	R/W	1920	reg_444c422_hsize : uns, default = 1920 ;horizontal size
12:0	R/W	960	reg_444c422_vsize : uns, default = 960 ;vertical size

Table 10-2879 VDIN0_DSC_HSIZE 0x12d5

Bit(s)	R/W	Default	Description
28:16	R/W	1920	reg_detunnel_hsize : uns, default = 1920 ;
12:0	R/W	1920	reg_dither_hsize : uns, default = 1920 ;

Table 10-2880 VDIN0_DSC_DETUNNEL_SEL 0x12d6

Bit(s)	R/W	Default	Description
17:0	R/W	34658	reg_detunnel_sel : uns, default = 34658; //{3'h1,3'h0,3'h3 ,3'h5,3'h4,3'h2}

Table 10-2881 VDIN0_DSC_TUNNEL_SEL 0x12d7

Bit(s)	R/W	Default	Description
17:0	R/W	69868	reg_tunnel_sel : uns, default = 69868; //= {3'h2,3'h1 ,3'h0,3'h3 ,3'h5,3'h4};

Amlogic Proprietary and Confidential
Copyright © Amlogic. All rights reserved.

Table 10-2882 VDIN0_HDR2_SIZE 0x12d8

Bit(s)	R/W	Default	Description
28-16	R/W	0x438	Vdin hdr2 vsize
12-0	R/W	0x780	Vdin hdr2 hsize

Table 10-2883 VDIN0_VSHRK_SIZE_M1 0x12d9

Bit(s)	R/W	Default	Description
28-16	R/W	0x10d	Vshrink input vsize m1
12-0	R/W	0x437	Vshrink input hsize m1

VDIN0_DITH_CTRL 0x12e0

Same as VPU_VENCL_DITH_CTRL

VDIN0_DITH_LUT_1 0x12e1

Same as VPU_VENCL_DITH_LUT_1

VDIN0_DITH_LUT_2 0x12e2

Same as VPU_VENCL_DITH_LUT_2

VDIN0_DITH_LUT_3 0x12e3

Same as VPU_VENCL_DITH_LUT_3

VDIN0_DITH_LUT_4 0x12e4

Same as VPU_VENCL_DITH_LUT_4

VDIN0_DITH_LUT_5 0x12e5

Same as VPU_VENCL_DITH_LUT_5

VDIN0_DITH_LUT_6 0x12e6

Same as VPU_VENCL_DITH_LUT_6

VDIN0_DITH_LUT_7 0x12e7

Same as VPU_VENCL_DITH_LUT_7

VDIN0_DITH_LUT_8 0x12e8

Same as VPU_VENCL_DITH_LUT_8

VDIN0_DITH_LUT_9 0x12e9

Same as VPU_VENCL_DITH_LUT_9

VDIN0_DITH_LUT_10 0x12ea

Same as VPU_VENCL_DITH_LUT_10

VDIN0_DITH_LUT_10 0x12eb

Same as VPU_VENCL_DITH_LUT_10

VDIN0_DITH_LUT_11 0x12ec

Same as VPU_VENCL_DITH_LUT_11

Amlogic Proprietary and Confidential
Copyright © Amlogic. All rights reserved.

Table 10-2884 VDIN0_HSK_CTRL 0x12ef

Bit(s)	R/W	Default	Description
22:16	R/W	4	reg_hshrink_size, 2: 1/2 4: 1/4 hshrink, max=64: 1/64 hshrink
12:0	R/W	1920	reg_frm_hsize

Table 10-2885 VDIN0_HSK_COEF_0 0x12f0

Bit(s)	R/W	Default	Description
31:0	R/W	0	reg_hsk_coef00

Table 10-2886 VDIN0_HSK_COEF_1 0x12f1

Bit(s)	R/W	Default	Description
31:0	R/W	0	reg_hsk_coef01

Table 10-2887 VDIN0_HSK_COEF_2 0x12f2

Bit(s)	R/W	Default	Description
31:0	R/W	0	reg_hsk_coef02

Table 10-2888 VDIN0_HSK_COEF_3 0x12f3

Bit(s)	R/W	Default	Description
31:0	R/W	0	reg_hsk_coef03

Table 10-2889 VDIN0_HSK_COEF_4 0x12f4

Bit(s)	R/W	Default	Description
31:0	R/W	0	reg_hsk_coef04

Table 10-2890 VDIN0_HSK_COEF_5 0x12f5

Bit(s)	R/W	Default	Description
31:0	R/W	0	reg_hsk_coef05

Table 10-2891 VDIN0_HSK_COEF_6 0x12f6

Bit(s)	R/W	Default	Description
31:0	R/W	0	reg_hsk_coef06

Amlogic Proprietary and Confidential
Copyright © Amlogic. All rights reserved.

Table 10-2892 VDIN0_HSK_COEF_7 0x12f7

Bit(s)	R/W	Default	Description
31:0	R/W	0	reg_hsk_coef07

Table 10-2893 VDIN0_HSK_COEF_8 0x12f8

Bit(s)	R/W	Default	Description
31:0	R/W	0	reg_hsk_coef08

Table 10-2894 VDIN0_HSK_COEF_9 0x12f9

Bit(s)	R/W	Default	Description
31:0	R/W	0	reg_hsk_coef09

Table 10-2895 VDIN0_HSK_COEF_10 0x12fa

Bit(s)	R/W	Default	Description
31:0	R/W	0	reg_hsk_coef10

Table 10-2896 VDIN0_HSK_COEF_11 0x12fb

Bit(s)	R/W	Default	Description
31:0	R/W	0	reg_hsk_coef11

Table 10-2897 VDIN0_HSK_COEF_12 0x12fc

Bit(s)	R/W	Default	Description
31:0	R/W	0	reg_hsk_coef12

Table 10-2898 VDIN0_HSK_COEF_13 0x12fd

Bit(s)	R/W	Default	Description
31:0	R/W	0	reg_hsk_coef13

Table 10-2899 VDIN0_HSK_COEF_14 0x12fe

Bit(s)	R/W	Default	Description
31:0	R/W	0	reg_hsk_coef14

Table 10-2900 VDIN0_HSK_COEF_15 0x12ff

Bit(s)	R/W	Default	Description
31:0	R/W	0	reg_hsk_coef15

Amlogic Proprietary and Confidential
Copyright © Amlogic. All rights reserved.

VDIN1_SCALE_COEF_IDX 0x1300

VDIN1_SCALE_COEF 0x1301

Table 10-2901 VDIN1_COM_CTRL0 0x1302

Bit(s)	R/W	Default	Description
31	R/W	0	mpeg_to_vdin_sel, 0: mpeg source to NR directly, 1: mpeg source pass through here
30	R/W	0	mpeg_field info which can be written by software
29	R/W	0	force go_field, pulse signal
28	R/W	0	force go_line, pulse signal
27	R/W	0	enable mpeg_go_field input signal
26-20	R/W	0	hold lines
19	R/W	0	delay go_field function enable
18-12	R/W	0	delay go_field line number
11-10	R/W	0	component2 output switch, 00: select component0 in, 01: select component1 in, 10: select component2 in
9-8	R/W	0	component1 output switch, 00: select component0 in, 01: select component1 in, 10: select component2 in
7-6	R/W	0	component0 output switch, 00: select component0 in, 01: select component1 in, 10: select component2 in
5	R/W	0	input window selection function enable
4	R/W	0	enable VDIN common data input, otherwise there will be no video data input
3-0	R/W	0	vdin selection, 1: mpeg_in from dram; 2: bt656 input; 3: Reserved (component input); 4: Reserved(tvdecoder input); 5: Reserved(hdmi rx input); 6: reserved(digital video input); 7: Wr_back 0; 8: reserved(MIPI CSI2) ;9: Wr_back 1; 10: Reserved(second bt656 input); otherwise no input.

Table 10-2902 VDIN1_ACTIVE_MAX_PIX_CNT_STATUS 0x1303

Bit(s)	R/W	Default	Description
28-16	R	0	active_max_pix_cnt, readonly
12-0	R	0	active_max_pix_cnt_shadow, readonly

Table 10-2903 VDIN1_LCNT_STATUS 0x1304

Bit(s)	R/W	Default	Description
28-16	R	0	go_line_cnt, readonly
12-0	R	0	active_line_cnt, readonly

Amlogic Proprietary and Confidential
Copyright © Amlogic. All rights reserved.

Table 10-2904 VDIN1_COM_STATUS0 0x1305

Bit(s)	R/W	Default	Description
12-3	R	0	lfifo_buf_cnt
2	R	0	vdin_direct_done status
1	R	0	vdin_nr_done status
0	R	0	field

Table 10-2905 VDIN1_COM_STATUS1 0x1306

Bit(s)	R/W	Default	Description
31	R	0	vdi4 fifo overflow
29-24	R	0	vdi3_asfifo_cnt
23	R	0	vdi3 fifo overflow
21-16	R	0	vdi3_asfifo_cnt
15	R	0	vdi2 fifo overflow
13-8	R	0	vdi2_asfifo_cnt
7	R	0	vdi1 fifo overflow
5-0	R	0	vdi1_asfifo_cnt

Table 10-2906 VDIN1_LCNT_SHADOW_STATUS 0x1307

Bit(s)	R/W	Default	Description
28-16	R	0	go_line_cnt_shadow, readonly
12-0	R	0	active_line_cnt_shadow, readonly

Table 10-2907 VDIN1_ASFIFO_CTRL0 0x1308

Bit(s)	R/W	Default	Description
31	R/W	0	hv size select 0: write mif size 1:vdin hsc input size
30-28	R/W	0	v de start line number
27-20	R/W	0	v blank
19-12	R/W	0	h blank
10-9	R/W	0	bist pattern 0:horizontal gray scale 1: vertical gray scale 2/3:random data
8	R/W	0	Vdin bist enable : replace vdi6 (loop back path)
7	R/W	0	Vdi1 DE enable
6	R/W	0	Vdi1 go field enable
5	R/W	0	Vdi1 go line enable
4	R/W	0	Vdi1 if true, negative active input vsync
3	R/W	0	Vdi1 if true, negative active input hsync
2	R/W	0	Vdi1 vsync soft reset fifo enable

Amlogic Proprietary and Confidential
Copyright © Amlogic. All rights reserved.

Bit(s)	R/W	Default	Description
1	R/W	0	Vdi1 overflow status clear
0	R/W	0	Vdi1 asfifo soft reset, level signal

Table 10-2908 VDIN1_ASFIFO_CTRL1 0x1309

Bit(s)	R/W	Default	Description
23	R/W	0	Vdi4 DE enable
22	R/W	0	Vdi4 go field enable
21	R/W	0	Vdi4 go line enable
20	R/W	0	Vdi4 if true, negative active input vsync
19	R/W	0	Vdi4 if true, negative active input hsync
18	R/W	0	Vdi4 vsync soft reset fifo enable
17	R/W	0	Vdi4 overflow status clear
16	R/W	0	Vdi4 asfifo soft reset, level signal
7	R/W	0	Vdi3 DE enable
6	R/W	0	Vdi3 go field enable
5	R/W	0	Vdi3 go line enable
4	R/W	0	Vdi3 if true, negative active input vsync
3	R/W	0	Vdi3 if true, negative active input hsync
2	R/W	0	Vdi3 vsync soft reset fifo enable
1	R/W	0	Vdi3 overflow status clear
0	R/W	0	Vdi3 asfifo soft reset, level signal

Table 10-2909 VDIN1_WIDTHM1I_WIDTHM1O 0x130a

Bit(s)	R/W	Default	Description
28-16	R/W	0	input width minus 1, after the window function
12-0	R/W	0	output width minus 1

Table 10-2910 VDIN1_SC_MISC_CTRL 0x130b

Bit(s)	R/W	Default	Description
14-8	R/W	0	hsc_ini_pixi_ptr, signed data, only useful when short_lineo_en is true
7	R/W	0	prehsc_en
6	R/W	0	hsc_en
5	R/W	0	hsc_short_lineo_en, short line output enable
4	R/W	0	hsc_nearest_en
3	R/W	0	Hsc_phase0_always_en

Amlogic Proprietary and Confidential
Copyright © Amlogic. All rights reserved.

Bit(s)	R/W	Default	Description
3	R/W	0	phase0_always_en
2-0	R/W	0	hsc_bank_length

Table 10-2911 VDIN1_HSC_PHASE_STEP 0x130c

Bit(s)	R/W	Default	Description
28-24	R/W	0	integer portion
23-0	R/W	0	fraction portion

Table 10-2912 VDIN1_HSC_INI_CTRL 0x130d

Bit(s)	R/W	Default	Description
30-29	R/W	0	hscale rpt_p0_num
28-24	R/W	0	hscale ini_rcv_num
23-0	R/W	0	hscale ini_phase

Table 10-2913 VDIN1_COM_STATUS2 0x130e

Bit(s)	R/W	Default	Description
23	R	0	Vdi7 fifo overflow
21-16	R	0	Vdi7_asfifo_cnt
15	R	0	Vdi6 fifo overflow
13-8	R	0	Vdi6_asfifo_cnt
7	R	0	vdi5 fifo overflow
5-0	R	0	vdi5_asfifo_cnt

Table 10-2914 VDIN1_ASFIFO_CTRL2 0x130f

Bit(s)	R/W	Default	Description
25	R/W	0	if true, decimation counter sync with first valid DE in the field, //otherwise the decimation counter is not sync with external signal
24	R/W	0	decimation de enable
23-20	R/W	0	decimation phase, which counter value use to decimate,
19-16	R/W	0	decimation number, 0: not decimation, 1: decimation 2, 2: decimation 3 ....
7	R/W	0	Vdi5 DE enable
6	R/W	0	Vdi5 go field enable
5	R/W	0	Vdi5 go line enable
4	R/W	0	Vdi5 if true, negative active input vsync
3	R/W	0	Vdi5 if true, negative active input hsync
2	R/W	0	Vdi5 vsync soft reset fifo enable

Amlogic Proprietary and Confidential
Copyright © Amlogic. All rights reserved.

Bit(s)	R/W	Default	Description
1	R/W	0	Vdi5 overflow status clear
0	R/W	0	Vdi5 asfifo soft reset, level signal

Table 10-2915 VDIN1_MATRIX_CTRL 0x1310

Bit(s)	R/W	Default	Description
0	R/W	0	post conversion matrix enable

Table 10-2916 VDIN1_MATRIX_COEF00_01 0x1311

Bit(s)	R/W	Default	Description
28-16	R/W	0	coef00
12-0	R/W	0	coef01

Table 10-2917 VDIN1_MATRIX_COEF02_10 0x1312

Bit(s)	R/W	Default	Description
28-16	R/W	0	coef02
12-0	R/W	0	Coef10

Table 10-2918 VDIN1_MATRIX_COEF11_12 0x1313

Bit(s)	R/W	Default	Description
28-16	R/W	0	Coef11
12-0	R/W	0	Coef12

Table 10-2919 VDIN1_MATRIX_COEF20_21 0x1314

Bit(s)	R/W	Default	Description
28-16	R/W	0	Coef20
12-0	R/W	0	coef21

Table 10-2920 VDIN1_ 0x1315

Bit(s)	R/W	Default	Description
18-16	R/W	0	convrs
7-0	R/W	0	Coef22

Amlogic Proprietary and Confidential
Copyright © Amlogic. All rights reserved.

Table 10-2921 VDIN1_MATRIX_OFFSET0_1 0x1316

Bit(s)	R/W	Default	Description
26-16	R/W	0	offset0
10-0	R/W	0	Offset1

Table 10-2922 VDIN1_MATRIX_OFFSET2 0x1317

Bit(s)	R/W	Default	Description
10-0	R/W	0	Offset2

Table 10-2923 VDIN1_MATRIX_PRE_OFFSET0_1 0x1318

Bit(s)	R/W	Default	Description
26-16	R/W	0	Pre_offset0
10-0	R/W	0	Pre_Offset1

Table 10-2924 VDIN1_MATRIX_PRE_OFFSET2 0x1319

Bit(s)	R/W	Default	Description
10-0	R/W	0	Pre_Offset2

Table 10-2925 VDIN1_LFIFO_CTRL 0x131a

Bit(s)	R/W	Default	Description
31	R/W	1	Linebuffer soft reset enable
30	R/W	1	Frame reset enable
28	R/W	0	Discard data enable
18	R/W	0	Vdin channel1 output enable
17	R/W	1	Vdin channel0 output enable
16	R/W	0	Pps_path_sel : 0: pps before linebuffer 1:pps after linebuffer
13-0	R/W	0x1000	lfifo_buf_size

Table 10-2926 VDIN1_COM_GCLK_CTRL 0x131b

Bit(s)	R/W	Default	Description
15-14	R/W	0	Gate clock control for blackbar detector
13-12	R/W	0	Gate clock control for hist
11-10	R/W	0	Gate clock control for line fifo
9-8	R/W	0	Gate clock control for matrix
7-6	R/W	0	Gate clock control for horizontal scaler
5-4	R/W	0	Gate clock control for pre scaler

Amlogic Proprietary and Confidential
Copyright © Amlogic. All rights reserved.

Bit(s)	R/W	Default	Description
3-2	R/W	0	Gate clock control for vdin_com_proc
1-0	R/W	0	Gate clock control for the vdin reg

Table 10-2927 VDIN1_INTF_WIDTHM1 0x131c

Bit(s)	R/W	Default	Description
26	R/W	0	VDIN write mif bvalid_sel: 1. Bvalid_singnal from bus, 0: bytes_wr handshakes
25	R/W	0	VDIN write mif burst last sel: 1. All kind of burst last signal include ext_data_last. 0. Used the normal burst last signal
12-0	R/W	0	VDIN input interface width minus 1, before the window function, after the de decimation

Table 10-2928 VDIN1_WR_CTRL2 0x131f

Bit(s)	R/W	Default	Description
19	R/W	0	Vdin1 wr bit10 mode
18	R/W	0	Data_ext_en 1: send out data if req was interrupt by soft reset 0 : normal mode
17:16	R/W	1	Words lim[1:0]: it would not send out request before Words_lim *16 words were ready
15:12	R/W	1	Burst_ lim : 00 , 1 word in 1burst , 01 ,2 words in 1burst, 10, 4 words in 1burst , 11 reserved
10:9	R/W	0	Words_lim[3:2]
8	R/W	0	1: discard data before line fifo, 0: normal mode
7-0	R/W	0	Write chroma canvas address, for NV12/21 mode.

Table 10-2929 VDIN1_WR_CTRL 0x1320

Bit(s)	R/W	Default	Description
31-30	R/W	0	vdin1_wr_mif_hconv_mode. Applicable only to vdin_write_format=0 or 2. 0=Output every even pixel's CbCr; 1=Output every odd pixel's CbCr; 2=Output an average value per even pair of pixels; 3=Output all CbCr. Only applys to vdin_write_format =2.
29	R/W	0	vdin1_wr_mif_no_clk_gate. If true, enable free-run clock.
28	R/W	0	clear write response counter in the vdin write memory interface
27	R/W	1	eol_sel, 1: use eol as the line end indication, 0: use width as line end indication in the vdin write memory interface
23	R/W	1	vdin frame reset enble, if true, it will provide frame reset during go_field(vsync) to the modules after that
22	R/W	1	vdin line fifo soft reset enable, meaning, if true line fifo will reset during go_field (vsync)
21	R/W	0	vdin direct write done status clear bit
20	R/W	0	vdin NR write done status clear bit
19	R/W	0	Vdin0_wr words swap : swap the 2 64bits word in 128 words

Amlogic Proprietary and Confidential
Copyright © Amlogic. All rights reserved.

Bit(s)	R/W	Default	Description
18	R/W	0	vdin1_wr_mif_swap_cbcr. Applicable only to vdin_write_format =2. 0=Output CbCr (NV12); 1=Output CrCb (NV21);
17:16	R/W	0	vdin1_wr_mif_vconv_mode. Applicable only to vdin_write_format=2. 0=Output every even line's CbCr; 1=Output every odd line's CbCr; 2=Reserved; 3=Output all CbCr.
13-12	R/W	0	vdin_write_format, 0: 4:2:2 to one canvas; 1: 4:4:4 to one canvas; 2: Y to luma canvas, CbCr to chroma canvas, for NV12/21; 3: 422 10 bit full pack mode
11	R/W	0	vdin write canvas double buffer enable, means the canvas address will be latched by vsync before using
9	R/W	0	vdin write request urgent
8	R/W	0	vdin write request enable
7-0	R/W	0	Write canvas address (For NV12/21 mode, it's LUMA canvas)

Table 10-2930 VDIN1_WR_H_START_END 0x1321

Bit(s)	R/W	Default	Description
27-16	R/W	0	start
11-0	R/W	0	end

Table 10-2931 VDIN1_WR_V_START_END 0x1322

Bit(s)	R/W	Default	Description
27-16	R/W	0	start
11-0	R/W	0	end

Table 10-2932 VDIN1_VSC_PHASE_STEP 0x1323

Bit(s)	R/W	Default	Description
24-16	R/W	0	integer portion
19-0	R/W	0	fraction portion

Table 10-2933 VDIN1_VSC_INI_CTRL 0x1324

Bit(s)	R/W	Default	Description
23	R/W	0	vsc_en, vertical scaler enable
21	R/W	0	vsc_phase0_always_en, when scale up, you have to set it to 1
20-16	R/W	0	ini skip_line_num
15-0	R/W	0	vscaler ini_phase

Amlogic Proprietary and Confidential
Copyright © Amlogic. All rights reserved.

Table 10-2934 VDIN1_SCIN_HEIGHTM1 0x1325

Bit(s)	R/W	Default	Description
28-16	R/W	0xc7	Vshrink output height m1
12-0	R/W	0x437	scaler input height minus 1

Table 10-2935 VDIN1_DUMMY_DATA 0x1326

Bit(s)	R/W	Default	Description
23-16	R/W	0	dummy component 0
15-8	R/W	0x80	dummy component 1
7-0	R/W	0x80	dummy component 2

Table 10-2936 VDIN1_MATRIX_PROBE_COLOR 0x1328

Bit(s)	R/W	Default	Description
29-20	R/W	0	component 0
19-10	R/W	0	omponent 1
9-0	R/W	0	component 2

Table 10-2937 VDIN1_MATRIX_HL_COLOR 0x1329

Bit(s)	R/W	Default	Description
23-16	R/W	0	component 0
15-8	R/W	0	component 1
7-0	R/W	0	component 2

Table 10-2938 VDIN1_MATRIX_PROBE_POS 0x132a

Bit(s)	R/W	Default	Description
28-16	R/W	0	probe x, position
12-0	R/W	0	probe y, postion

Table 10-2939 VDIN1_HIST_CTRL 0x1330

Bit(s)	R/W	Default	Description
31-24	R/W	0	Hist pixel white threshold, larger than this will be counted as white pixel number
23-16	R/W	0	Hist pixel black threshold, less than this will be counted as black pixel number
11	R/W	0	Hist 32bin only mode
10-9	R/W	0	ldim_stts_din_sel, 00: from matrix0 dout, 01: from vsc_dout, 10: from matrix1 dout, 11: form matrix1 din
8	R/W	0	ldim_stts_en

Amlogic Proprietary and Confidential
Copyright © Amlogic. All rights reserved.

Bit(s)	R/W	Default	Description
6-5	R/W	0	hist_dnlp_low the real pixels in each bins got by VDIN_DNLP_HISTXX should multiple with 2^(dnlp_low+3)
4-2	R/W	0	hist_din_sel the source used for hist statistics. 2'b00: from MAT0_dout; 2'b01: from vsc_dout; 2'b10: from mat1_dout, 3: mat1_din 4:hdr2 dout
1	R/W	0	hist_win_en 1'b0: hist used for full picture; 1'b1: hist used for pixels within hist window
0	R/W	0	hist_spl_en 1'b0: disable hist readback; 1'b1: enable hist readback

Table 10-2940 VDIN1_HIST_H_START_END 0x1331

Bit(s)	R/W	Default	Description
28-16	R/W	0	hist_hstart horizontal start value to define hist window
12-0	R/W	0	hist_hend horizontal end value to define hist window

Table 10-2941 VDIN1_HIST_V_START_END 0x1332

Bit(s)	R/W	Default	Description
28-16	R/W	0	hist_vstart vertical start value to define hist window
12-0	R/W	0	hist_vend vertical end value to define hist window

Table 10-2942 VDIN1_HIST_MAX_MIN 0x1333

Bit(s)	R/W	Default	Description
15-8	R	0	hist_max maximum value
7-0	R	0	hist_min minimum value

Table 10-2943 VDIN1_HIST_SPL_VAL 0x1334

Bit(s)	R/W	Default	Description
31-0	R	0	hist_spl_rd , counts for the total luma value

Table 10-2944 VDIN1_HIST_SPL_PIX_CNT 0x1335

Bit(s)	R/W	Default	Description
21-0	R	0	hist_spl_pixel_count, counts for the total calculated pixels

Table 10-2945 VDIN1_HIST_CHROMA_SUM 0x1336

Bit(s)	R/W	Default	Description
31-0	R	0	hist_chroma_sum , counts for the total chroma value

Amlogic Proprietary and Confidential
Copyright © Amlogic. All rights reserved.

Table 10-2946 VDIN1_DNLP_HIST00 0x1337

//0-255 are split to 64 bins evenly, and VDIN_DNLP_HISTXX //are the statistic number of pixels that within each bin.

Bit(s)	R/W	Default	Description
31-16	R	0	counts for the 2nd bin
15-0	R	0	counts for the 1st bin

Table 10-2947 VDIN1_DNLP_HIST01 0x1338

Bit(s)	R/W	Default	Description
31-16	R	0	counts for the 4th bin
15-0	R	0	counts for the 3rd bin

Table 10-2948 VDIN1_DNLP_HIST02 0x1339

Bit(s)	R/W	Default	Description
31-16	R	0	counts for the 6th bin
15-0	R	0	counts for the 5th bin

Table 10-2949 VDIN1_DNLP_HIST03 0x133a

Bit(s)	R/W	Default	Description
31-16	R	0	counts for the 8th bin
15-0	R	0	counts for the 7th bin

Table 10-2950 VDIN1_DNLP_HIST04 0x133b

Bit(s)	R/W	Default	Description
31-16	R	0	counts for the 10th bin
15-0	R	0	counts for the 9th bin

Table 10-2951 VDIN1_DNLP_HIST05 0x133c

Bit(s)	R/W	Default	Description
31-16	R	0	counts for the 12th bin
15-0	R	0	counts for the 11th bin

Table 10-2952 VDIN1_DNLP_HIST06 0x133d

Bit(s)	R/W	Default	Description
31-16	R	0	counts for the 14th bin
15-0	R	0	counts for the 13th bin

Amlogic Proprietary and Confidential
Copyright © Amlogic. All rights reserved.

Table 10-2953 VDIN1_DNLP_HIST07 0x133e

Bit(s)	R/W	Default	Description
31-16	R	0	counts for the 16th bin
15-0	R	0	counts for the 15th bin

Table 10-2954 VDIN1_DNLP_HIST08 0x133f

Bit(s)	R/W	Default	Description
31-16	R	0	counts for the 18th bin
15-0	R	0	counts for the 17th bin

Table 10-2955 VDIN1_DNLP_HIST09 0x1340

Bit(s)	R/W	Default	Description
31-16	R	0	counts for the 20th bin
15-0	R	0	counts for the 19th bin

Table 10-2956 VDIN1_DNLP_HIST10 0x1341

Bit(s)	R/W	Default	Description
31-16	R	0	counts for the 22nd bin
15-0	R	0	counts for the 21st bin

Table 10-2957 VDIN1_DNLP_HIST11 0x1342

Bit(s)	R/W	Default	Description
31-16	R	0	counts for the 24th bin
15-0	R	0	counts for the 23rd bin

Table 10-2958 VDIN1_DNLP_HIST12 0x1343

Bit(s)	R/W	Default	Description
31-16	R	0	counts for the 26th bin
15-0	R	0	counts for the 25th bin

Table 10-2959 VDIN1_DNLP_HIST13 0x1344

Bit(s)	R/W	Default	Description
31-16	R	0	counts for the 28th bin
15-0	R	0	counts for the 27th bin

Amlogic Proprietary and Confidential
Copyright © Amlogic. All rights reserved.

Table 10-2960 VDIN1_DNLP_HIST14 0x1345

Bit(s)	R/W	Default	Description
31-16	R	0	counts for the 30th bin
15-0	R	0	counts for the 29th bin

Table 10-2961 VDIN1_DNLP_HIST15 0x1346

Bit(s)	R/W	Default	Description
31-16	R	0	counts for the 32nd bin
15-0	R	0	counts for the 31st bin

Table 10-2962 VDIN1_DNLP_HIST16 0x1347

Bit(s)	R/W	Default	Description
31-16	R	0	counts for the 34th bin
15-0	R	0	counts for the 33rd bin

Table 10-2963 VDIN1_DNLP_HIST17 0x1348

Bit(s)	R/W	Default	Description
31-16	R	0	counts for the 36th bin
15-0	R	0	counts for the 35th bin

Table 10-2964 VDIN1_DNLP_HIST18 0x1349

Bit(s)	R/W	Default	Description
31-16	R	0	counts for the 38th bin
15-0	R	0	counts for the 37th bin

Table 10-2965 VDIN1_DNLP_HIST19 0x134a

Bit(s)	R/W	Default	Description
31-16	R	0	counts for the 40th bin
15-0	R	0	counts for the 39th bin

Table 10-2966 VDIN1_DNLP_HIST20 0x134b

Bit(s)	R/W	Default	Description
31-16	R	0	counts for the 42nd bin
15-0	R	0	counts for the 41st bin

Amlogic Proprietary and Confidential
Copyright © Amlogic. All rights reserved.

Table 10-2967 VDIN1_DNLP_HIST21 0x134c

Bit(s)	R/W	Default	Description
31-16	R	0	counts for the 44th bin
15-0	R	0	counts for the 43rd bin

Table 10-2968 VDIN1_DNLP_HIST22 0x134d

Bit(s)	R/W	Default	Description
31-16	R	0	counts for the 46th bin
15-0	R	0	counts for the 45th bin

Table 10-2969 VDIN1_DNLP_HIST23 0x134e

Bit(s)	R/W	Default	Description
31-16	R	0	counts for the 48th bin
15-0	R	0	counts for the 47th bin

Table 10-2970 VDIN1_DNLP_HIST24 0x134f

Bit(s)	R/W	Default	Description
31-16	R	0	counts for the 50th bin
15-0	R	0	counts for the 49th bin

Table 10-2971 VDIN1_DNLP_HIST25 0x1350

Bit(s)	R/W	Default	Description
31-16	R	0	counts for the 52nd bin
15-0	R	0	counts for the 51st bin

Table 10-2972 VDIN1_DNLP_HIST26 0x1351

Bit(s)	R/W	Default	Description
31-16	R	0	counts for the 54th bin
15-0	R	0	counts for the 53rd bin

Table 10-2973 VDIN1_DNLP_HIST27 0x1352

Bit(s)	R/W	Default	Description
31-16	R	0	counts for the 56th bin
15-0	R	0	counts for the 55th bin

Amlogic Proprietary and Confidential
Copyright © Amlogic. All rights reserved.

Table 10-2974 VDIN1_DNLP_HIST28 0x1353

Bit(s)	R/W	Default	Description
31-16	R	0	counts for the 58th bin
15-0	R	0	counts for the 57th bin

Table 10-2975 VDIN1_DNLP_HIST29 0x1354

Bit(s)	R/W	Default	Description
31-16	R	0	counts for the 60th bin
15-0	R	0	counts for the 59th bin

Table 10-2976 VDIN1_DNLP_HIST30 0x1355

Bit(s)	R/W	Default	Description
31-16	R	0	counts for the 62nd bin
15-0	R	0	counts for the 61st bin

Table 10-2977 VDIN1_DNLP_HIST31 0x1356

Bit(s)	R/W	Default	Description
31-16	R	0	counts for the 64th bin
15-0	R	0	counts for the 63rd bin

Table 10-2978 VDIN1_WR_URGENT_CTRL 0x1357

Bit(s)	R/W	Default	Description
15	R/W	0	Auto urgent enable
14	R/W	0	Urgent write
9	R/W	0	Write done last sel
8	R/W	0	Reg bvalid enable
7-4	R/W	0	Up_threshold
3-0	R/W	0	Down threshold

Table 10-2979 VDIN1_RO_WRMIF_STATUS 0x1358

Bit(s)	R/W	Default	Description
20-18	R/W	0	C2 sel
17-15	R/W	0	C1 sel
14-12	R/W	0	C0 sel
11-9	R/W	0	Y2 sel
8-6	R/W	0	Y1 sel
5-3	R/W	0	Y0 sel

Amlogic Proprietary and Confidential
Copyright © Amlogic. All rights reserved.

Bit(s)	R/W	Default	Description
2	R/W	0	De tunnel enable
1	R	0	Di pre , nr done
0	R	0	Vdin write mif done

Table 10-2980 VDIN1_LDIM_STTS_HIST_READ_REGION 0x1359

Bit(s)	R/W	Default	Description
29:20	R	0	Max_comp2
19:10	R	0	Max_comp1
9:0	R	0	Max_comp0

Table 10-2981 VDIN1_MEAS_CTRL0 0x135a

Bit(s)	R/W	Default	Description
18	R/W	0	reset bit, high active
17	R/W	0	if true, widen hs/vs pulse
16	R/W	0	vsync total counter always accumulating enable
14-12	R/W	0	select hs/vs of video input channel to measure, 0: no selection, 1 vdi1, 2: vid2: 3: vid3, 4:vid4, 5:vdi5, 6:vdi6, 7:vdi7, 8:vdi8, 9:vdi9.
11-4	R/W	0	vsync_span, define how many vsync span need to measure
2-0	R/W	0	meas_hs_index, index to select which HS counter/range

Table 10-2982 VDIN1_MEAS_VS_COUNT_HI 0x135b

Bit(s)	R/W	Default	Description
19-16	R	0	meas_ind_total_count_n, every number of sync_span vsyncs, this count add 1
15-0	R	0	high bit portion of vsync total counter

Table 10-2983 VDIN1_MEAS_VS_COUNT_LO 0x135c

Bit(s)	R/W	Default	Description
31-0	R	0	low bit portion of vsync total counter

Table 10-2984 VDIN1_MEAS_HS_RANGE 0x135d

//according to the meas_hs_index in register VDIN_MEAS_CTRL0 //meas_hs_index == 0, first hs range //meas_hs_index == 1, second hs range //meas_hs_index == 2, third hs range //meas_hs_index == 3, fourth hs range

Bit(s)	R/W	Default	Description
28-16	R	0	count_start
12-0	R	0	count_end

Amlogic Proprietary and Confidential
Copyright © Amlogic. All rights reserved.

Table 10-2985 VDIN1_MEAS_HS_COUNT 0x135e

//according to the meas_hs_index in register VDIN_MEAS_CTRL0, //meas_hs_index == 0, first range hs counter, //meas_hs_index == 1, second range hs //meas_hs_index == 2, third range hs //meas_hs_index == 3, fourth range hs

Bit(s)	R/W	Default	Description
23-0	R	0	Hs counter

Table 10-2986 VDIN1_BLKBAR_CTRL1 0x135f

Bit(s)	R/W	Default	Description
8	R/W	0	white_enable
7-0	R/W	0	blkbar_white_level

Table 10-2987 VDIN1_BLKBAR_CTRL0 0x1360

Bit(s)	R/W	Default	Description
31-24	R/W	0	blkbar_black_level threshold to judge a black point
20-8	R/W	0	blkbar_hwidth left and right region width
7-5	R/W	0	blkbar_comp_sel select yin or uin or vin to be the valid input
4	R/W	0	blkbar_sw_statistic_en enable software statistic of each block black points number
3	R/W	0	blkbar_det_en
2-1	R/W	0	blkbar_din_sel
0	R/W	0	Blkbar_det_top_en

Table 10-2988 VDIN1_BLKBAR_H_START_END 0x1361

Bit(s)	R/W	Default	Description
28-16	R/W	0	blkbar_hstart. Left region start
12-0	R/W	0	blkbar_hend. Right region end

Table 10-2989 VDIN1_BLKBAR_V_START_END 0x1362

Bit(s)	R/W	Default	Description
28-16	R/W	0	blkbar_vstart.
12-0	R/W	0	blkbar_vend.

Table 10-2990 VDIN1_BLKBAR_CNT_THRESHOLD 0x1363

Bit(s)	R/W	Default	Description
19-0	R/W	0	blkbar_cnt_threshold. threshold to judge whether a block is totally black

Amlogic Proprietary and Confidential
Copyright © Amlogic. All rights reserved.

Table 10-2991 VDIN1_BLKBAR_ROW_TH1_TH2 0x1364

Bit(s)	R/W	Default	Description
28-16	R/W	0	blkbar_row_th1. //threshold of the top blackbar
12-0	R/W	0	blkbar_row_th2 //threshold of the bottom blackbar

Table 10-2992 VDIN1_BLKBAR_IND_LEFT_START_END 0x1365

Bit(s)	R/W	Default	Description
28-16	R	0	blkbar_ind_left_start. horizontal start of the left region in the current searching
12-0	R	0	blkbar_ind_left_end. horizontal end of the left region in the current searching

Table 10-2993 VDIN1_BLKBAR_IND_RIGHT_START_END 0x1366

Bit(s)	R/W	Default	Description
28-16	R	0	blkbar_ind_right_start.horizontal start of the right region in the current searching
12-0	R	0	blkbar_ind_right_end. horizontal end of the right region in the current searching

Table 10-2994 VDIN1_BLKBAR_IND_LEFT1_CNT 0x1367

Bit(s)	R/W	Default	Description
19-0	R	0	blkbar_ind_left1_cnt. Black pixel counter. left part of the left region

Table 10-2995 VDIN1_BLKBAR_IND_LEFT2_CNT 0x1368

Bit(s)	R/W	Default	Description
19-0	R	0	blkbar_ind_left2_cnt. Black pixel counter. right part of the left region

Table 10-2996 VDIN1_BLKBAR_IND_RIGHT1_CNT 0x1369

Bit(s)	R/W	Default	Description
19-0	R	0	blkbar_ind_right1_cnt. Black pixel counter. left part of the right region

Table 10-2997 VDIN1_BLKBAR_IND_RIGHT2_CNT 0x136a

Bit(s)	R/W	Default	Description
19-0	R	0	blkbar_ind_right2_cnt. Black pixel counter. right part of the right region

Amlogic Proprietary and Confidential
Copyright © Amlogic. All rights reserved.

Table 10-2998 VDIN1_BLKBAR_STATUS0 0x136b

Bit(s)	R/W	Default	Description
29	R	0	blkbar_ind_black_det_done. LEFT/RIGHT Black detection done
28-16	R	0	blkbar_top_pos. Top black bar position
12-0	R	0	blkbar_bot_pos. Bottom black bar position

Table 10-2999 VDIN1_BLKBAR_STATUS1 0x136c

Bit(s)	R/W	Default	Description
28-16	R	0	blkbar_left_pos. Left black bar position
12-0	R	0	blkbar_right_pos. Right black bar position

Table 10-3000 VDIN1_WIN_H_START_END 0x136d

Bit(s)	R/W	Default	Description
28-16	R/W	0	input window H start
12-0	R/W	0	input window H end

Table 10-3001 VDIN1_WIN_V_START_END 0x136e

Bit(s)	R/W	Default	Description
28-16	R/W	0	input window V start
12-0	R/W	0	input window V end

Table 10-3002 VDIN1_ASFIFO_CTRL3 0x136f

Bit(s)	R/W	Default	Description
15	R/W	0	Vdi7 DE enable
14	R/W	0	Vdi7 go field enable
13	R/W	0	Vdi7 go line enable
12	R/W	0	Vdi7 if true, negative active input vsync
11	R/W	0	Vdi7 if true, negative active input hsync
10	R/W	0	Vdi7 vsync soft reset fifo enable
9	R/W	0	Vdi7 overflow status clear
8	R/W	0	Vdi7 asfifo soft reset, level signal
7	R/W	0	Vdi6 DE enable
6	R/W	0	Vdi6 go field enable
5	R/W	0	Vdi6 go line enable
4	R/W	0	Vdi6 if true, negative active input vsync
3	R/W	0	Vdi6 if true, negative active input hsync

Amlogic Proprietary and Confidential
Copyright © Amlogic. All rights reserved.

Bit(s)	R/W	Default	Description
2	R/W	0	Vdi6 vsync soft reset fifo enable
1	R/W	0	Vdi6 overflow status clear
0	R/W	0	Vdi6 asfifo soft reset, level signal

Table 10-3003 VDIN1_COM_GCLK_CTRL2 0x1370

Bit(s)	R/W	Default	Description
3-2	R/W	0	Vshrk_clk2 ctrl
1-0	R/W	0	Vshrk_clk1 ctrl

Table 10-3004 VDIN1_VSHRK_CTRL 0x1371

Bit(s)	R/W	Default	Description
27	R/W	0	Vshrk enable
26:25	R/W	0	Vshrk mode, 0: 1/2 shrink, 1: 1/4 shrink, 2: 1/8 shrink
24	R/W	0	Vshrink lpf mode, 1: 0.5,1.5,1.5,0.5 lpf for 1/4 shrink, 0.5,1.5,1.5...for 1/8 shrink
23:0	R/W	0	Vshrink padding dummy data

Table 10-3005 VDIN1_HIST32 0x1372

Bit(s)	R/W	Default	Description
31:0	R	0	Hist 32 mode, [31:16] for white pixel number, 15:0 for black pixel number

Table 10-3006 VDIN1_COM_STATUS3 0x1373

Bit(s)	R/W	Default	Description
7	R	0	Vdi9 fifo overflow
5:0	R	0	Vdi9 asfifo cnt

Table 10-3007 VDIN1_SYNC_MASK 0x1374

Bit(s)	R/W	Default	Description
17	R/W	0	Vsync_mask_en
16	R/W	0	Hsync_mask_en
15-8	R/W	64	Vsync_mask_num: When vsync_mask_en=1, vdin_output_vsync will keep zero for vsync_mask_num*1024 vdin clock cycle after vdin_input_vsync pluse. Example: vdin_clock = 666MHz□vsync_mask_num=255, vdin out vsync will at least keep zero for 0.392ms after one input_vsync
7-0	R/W	64	Hsync_mask_num When hsync_mask_en=1, vdin_output_hsync will keep zero for hsync_mask_num*32 vdin clock cycle after vdin_input_vsync pluse

Amlogic Proprietary and Confidential
Copyright © Amlogic. All rights reserved.

Table 10-3008 VDIN1_DOLBY_DSC_CTRL0 0x1375

Bit(s)	R/W	Default	Description
31	R/W	0	Dolby check enable
30	R/W	0	Tunnel swap mode enable
29-24	R/W	0	Soft reset control, 29 : dsc, 28~27: crc check, 26~24, reserved
16	R/W	0	Little endian mode
15-0	R/W	0	Monitor metadata position

Table 10-3009 VDIN1_DOLBY_DSC_CTRL1 0x1376

Bit(s)	R/W	Default	Description
31-16	R/W	0	Metadata pixel start position
7-0	R/W	0	Crc check control

Table 10-3010 VDIN1_DOLBY_DSC_CTRL2 0x1377

Bit(s)	R/W	Default	Description
31	R/W	0	Metadata read enable
30	R/W	0	Metadata read address auto-increment
29-20	R/W	0	Metadata sum
17-0	R/W	0	Tunnel mode channel selection

Table 10-3011 VDIN1_DOLBY_DSC_CTRL3 0x1378

Bit(s)	R/W	Default	Description
15-0	R/W	0	Select metadata position

Table 10-3012 VDIN1_DOLBY_AXI_CTRL0 0x1379

Bit(s)	R/W	Default	Description
31	R/W	0	Memory read enable
30	R/W	0	AXI bus read enable
29	R/W	0	AXI write channel urgent
28	R/W	0	Pack mode little endian
27	R/W	0	AXI bus soft reset
26	R/W	0	Frame reset enable
25	R/W	0	Memory read protection enable
24-16	R/W	0	Memory read sum
15-8	R/W	0	AXI request hold line
7-6	R/W	0	AXI burst length
5	R/W	0	Frame buffer start

Amlogic Proprietary and Confidential
Copyright © Amlogic. All rights reserved.

Bit(s)	R/W	Default	Description
4	R/W	0	Buffer start
3-2	R/W	0	AXI status monitor control
1-0	R/W	0	awid

Table 10-3013 VDIN1_DOLBY_ AXI_CTRL1 0x137a

Bit(s)	R/W	Default	Description
31-0	R/W	0	Buffer start address

Table 10-3014 VDIN1_DOLBY_ AXI_CTRL2 0x137b

Bit(s)	R/W	Default	Description
31-16	R/W	0	Buffer size
15-0	R/W	0	Frame buffer size

Table 10-3015 VDIN1_DOLBY_ AXI_CTRL3 0x137c

Bit(s)	R/W	Default	Description
7-0	R/W	0	Hold cycle

Table 10-3016 VDIN1_CRC_CHK 0x13c9

Bit(s)	R/W	Default	Description
0	W	0	vdin crc check start (pulse)

Table 10-3017 VDIN1_RO_CRC 0x13ca

Bit(s)	R/W	Default	Description
31-0	R	0	vdin crc result (lock by go_field)

Table 10-3018 VDIN1_LINE_INT 0x13cb

Bit(s)	R/W	Default	Description
31	R	0	line interrupt flag
30	R	0	write done flag
17	R/W	0	clear line interrupt flag
16	R/W	0	clear write done interrupt flag
15	R/W	0	enable line interrupt
12-0	R/W	0	line interrupt number

Amlogic Proprietary and Confidential
Copyright © Amlogic. All rights reserved.

Table 10-3019 VDIN1_HDR2_SIZE 0x13d8

Bit(s)	R/W	Default	Description
28-16	R/W	0x438	Vdin hdr2 vsize
12-0	R/W	0x780	Vdin hdr2 hsize

Table 10-3020 VDIN1_VSHRK_SIZE_M1 0x13d9

Bit(s)	R/W	Default	Description
28-16	R/W	0x10d	Vshrink input vsize m1
12-0	R/W	0x437	Vshrink input hsize m1

Table 10-3021 VDIN2_WR_CTRL2 0x4102

Bit(s)	R/W	Default	Description
19	R/W	0	Vdin2 wr bit10 mode
18	R/W	0	Data_ext_en 1: send out data if req was interrupt by soft reset 0 : normal mode
17:16	R/W	1	Words lim[1:0]: it would not send out request before Words_lim *16 words were ready
15:12	R/W	1	Burst_ lim : 00 , 1 word in 1burst , 01 ,2 words in 1burst, 10, 4 words in 1burst , 11 reserved
10:9	R/W	0	Words_lim[3:2]
8	R/W	0	1: discard data before line fifo, 0: normal mode
7-0	R/W	0	Write chroma canvas address, for NV12/21 mode.

Table 10-3022 VDIN2_WR_CTRL 0x4101

Bit(s)	R/W	Default	Description
31-30	R/W	0	Vdin2_wr_mif_hconv_mode. Applicable only to vdin_write_format=0 or 2. 0=Output every even pixel's CbCr; 1=Output every odd pixel's CbCr; 2=Output an average value per even pair of pixels; 3=Output all CbCr. Only applys to vdin_write_format =2.
29	R/W	0	vdin1_wr_mif_no_clk_gate. If true, enable free-run clock.
28	R/W	0	clear write response counter in the vdin write memory interface
27	R/W	1	eol_sel, 1: use eol as the line end indication, 0: use width as line end indication in the vdin write memory interface
23	R/W	1	vdin frame reset enble, if true, it will provide frame reset during go_field(vsync) to the modules after that
22	R/W	1	vdin line fifo soft reset enable, meaning, if true line fifo will reset during go_field (vsync)
21	R/W	0	vdin direct write done status clear bit
20	R/W	0	vdin NR write done status clear bit
19	R/W	0	Vdin0_wr words swap : swap the 2 64bits word in 128 words
18	R/W	0	vdin1_wr_mif_swap_cbcr. Applicable only to vdin_write_format =2.

Amlogic Proprietary and Confidential
Copyright © Amlogic. All rights reserved.

Bit(s)	R/W	Default	Description
			0=Output CbCr (NV12); 1=Output CrCb (NV21);
17:16	R/W	0	vdin1_wr_mif_vconv_mode. Applicable only to vdin_write_format=2. 0=Output every even line's CbCr; 1=Output every odd line's CbCr; 2=Reserved; 3=Output all CbCr.
13-12	R/W	0	vdin_write_format, 0: 4:2:2 to one canvas; 1: 4:4:4 to one canvas; 2: Y to luma canvas, CbCr to chroma canvas, for NV12/21; 3: 422 10 bit full pack mode
11	R/W	0	vdin write canvas double buffer enable, means the canvas address will be latched by vsync before using
9	R/W	0	vdin write request urgent
8	R/W	0	vdin write request enable
7-0	R/W	0	Write canvas address (For NV12/21 mode, it's LUMA canvas)

Table 10-3023 VDIN2_WR_H_START_END 0x4103

Bit(s)	R/W	Default	Description
27-16	R/W	0	H start
11-0	R/W	0	H end

Table 10-3024 VDIN2_WR_V_START_END 0x4104

Bit(s)	R/W	Default	Description
27-16	R/W	0	V start
11-0	R/W	0	V end

Table 10-3025 VI_HIST_CTRL 0x2e00

Bit(s)	R/W	Default	Description
17-16	R/W	0	Spl_sft: the splt are right shift by spl_sft, 0: no shift, 1: right shift by 1. 2,3...
14	R/W	0	Hist_34bin_only, bin 32~63 are not valid, there are 34bins, bin0~bin31, and bin 64 for black pixel, bin 65 for white pixel
13-11	R/W	0	Hist_in_sel: 0: vpp_dout, 1: vpp_vd1_din, 2: vpp_vd2_din, 3: osd1, 4:osd2 5: di pre 6: vdin 7: post blend
10-8	R/W	0	Hist_din_comp_mux: mux of each component, din[9:0],[19:10],[29:20] switches
7-5	R/W	0	Hist_dnlp_low: hist number are shift by (hist_dnlp_low + 3). I.e. Dnlp_low =0, >> 3, dnlp_low=1, >> 4
1	R/W	0	Hist_win_en: hist statistic in a window
0	R/W	0	Luma_hist_spl_en, 1: enable the histogram statistic

Amlogic Proprietary and Confidential
Copyright © Amlogic. All rights reserved.

Table 10-3026 VDIN1_WRARB_MODE 0x13c0

Bit(s)	R/W	Default	Description
23:16	R/W	0	wrarb_sel : uns, default = 0 , wrarb_sel [0]==0 slave dc0 connect master port0 wrarb_sel[0]==1 slave dc0 connect master port1 wrarb_sel [1]==0 slave dc1 connect master port0 wrarb_sel[1]==1 slave dc1 connect master port1 wrarb_sel [2]==0 slave dc2 connect master port0 wrarb_sel[2]==1 slave dc2 connect master port1 wrarb_sel [3]==0 slave dc3 connect master port0 wrarb_sel[3]==1 slave dc3 connect master port1 wrarb_sel [4]==0 slave dc4 connect master port0 wrarb_sel[4]==1 slave dc3 connect master port1 wrarb_sel [5]==0 slave dc5 connect master port0 wrarb_sel[5]==1 slave dc3 connect master port1
8	R/W	0	wrarb_arb_mode : uns, default = 0 , wrarb_arb_mode[0] master port0 arb way,
1:0	R/W	0	wrarb_gate_clk_ctrl : uns, default = 0 , wrarb_gate_clk_ctrl[1:0] master port0 clk gate control

Table 10-3027 VDIN1_WRARB_REQEN_SLV 0x13c1

Bit(s)	R/W	Default	Description
7:0	R/W	0	wrarb_dc_req_en : unsigned , default = 0 wrarb_dc_req_en [0]: the slv0 req to mst port0 enable, wrarb_dc_req_en [1]: the slv1 req to mst port0 enable, wrarb_dc_req_en [2]: the slv2 req to mst port0 enable, wrarb_dc_req_en [0]: the slv0 req to mst port1 enable, wrarb_dc_req_en [1]: the slv1 req to mst port1 enable, wrarb_dc_req_en [2]: the slv2 req to mst port1 enable,

Table 10-3028 VDIN1_WRARB_WEIGH0_SLV 0x13C2

Bit(s)	R/W	Default	Description
29:0	R/W	0	wrdc_weigh_sxn : unsigned , default = 0 wrdc_weigh_sxn [0*6+:6]: the slv0 req weigh number wrdc_weigh_sxn [1*6+:6]: the slv1 req weigh number wrdc_weigh_sxn [2*6+:6]: the slv2 req weigh number wrdc_weigh_sxn [3*6+:6]: the slv3 req weigh number wrdc_weigh_sxn [4*6+:6]: the slv4 req weigh number

Table 10-3029 VDIN1_WRARB_WEIGH1_SLV 0x13C3

Bit(s)	R/W	Default	Description
17:0	R/W	0	wrdc_weigh_sxn : unsigned , default = 0 the slv5 req weigh number [0*6+:6],the slv6 req weighnumber [1*6+:6],the slv7 req weighnumber [2*6+:6],

Table 10-3030 VDIN1_RDWR_ARB_STATUS 0x13c4

Bit(s)	R/W	Default	Description
2	R.O	0	ro_wrarb_arb_busy : unsigned , default = 0
1	R/W	0x0	reserve :
0	R.O	0	ro_rdarb_arb_busy : unsigned , default = 0

Table 10-3031 VDIN1_ARB_DBG_CTRL 0x13c5

Bit(s)	R/W	Default	Description
31:0	R.O	0	ro_det_cmd_ctrl : unsigned , default = 0

Amlogic Proprietary and Confidential
Copyright © Amlogic. All rights reserved.

Table 10-3032 VDIN1_ARB_DBG_STAT 0x13C6

Bit(s)	R/W	Default	Description
31:0	R.O	0	ro_det_dbg_stat : unsigned , default = 0

Table 10-3033 VDIN1_DSC_CTRL 0x13d0

Bit(s)	R/W	Default	Description
9:4	R/W	36	reg_dithout_switch : ,uns, default = 36;//{2'h2,2'h1,2'h0}
3	R/W	1	reg_detunnel_en : ,uns, default = 1;
2	R/W	0	reg_detunnel_u_start : ,uns, default = 0;
1	R/W	1	reg_vdin_dith_en : ,uns, default = 1;
0	R/W	1	reg_descramble_en : ,uns, default = 1;

Table 10-3034 VDIN1_CFMT_CTRL 0x13d1

Bit(s)	R/W	Default	Description
8	R/W	0	reg_chfmt_rpt_pix : uns, default = 0 ; // if true, horizontal formatter use repeating to generete pixel, otherwise use bilinear interpolation
7:4	R/W	0	reg_chfmt_ini_phase : uns, default = 0 ; // horizontal formatter initial phase
3	R/W	0	reg_chfmt_rpt_p0_en : uns, default = 0 ; // horizontal formatter repeat pixel 0 enable
2:1	R/W	1	reg_chfmt_yc_ratio : uns, default = 1 ; // horizontal Y/C ratio, 00: 1:1, 01: 2:1, 10: 4:1
0	R/W	1	reg_chfmt_en : uns, default = 1 ; // horizontal formatter enable

Table 10-3035 VDIN1_CFMT_W 0x13d2

Bit(s)	R/W	Default	Description
28:16	R/W	1920	reg_chfmt_w : uns, default = 1920 ;horizontal formatter width
12:0	R/W	960	reg_cvfmt_w : uns, default = 960 ;vertical formatter width

Table 10-3036 VDIN1_SCB_CTRL0 0x13d3

Bit(s)	R/W	Default	Description
11	R/W	1	reg_444c422_gofield_en : uns, default = 1;
10	R/W	1	reg_tunnel_en : uns, default = 1;
9:4	R/W	36	reg_tunnel_outswitch : uns, default = 36;//{2'h2,2'h1,2'h0}
3:2	R/W	0	reg_444c422_mode : uns, default = 0; //0:left 1:right 2,3:avg
1	R/W	0	reg_444c422_bypass : uns, default = 0; 1:bypass

Amlogic Proprietary and Confidential
Copyright © Amlogic. All rights reserved.

Table 10-3037 VDIN1_SCB_CTRL1 0x13d4

Bit(s)	R/W	Default	Description
28:16	R/W	1920	reg_444c422_hsize : uns, default = 1920 ;horizontal size
12:0	R/W	960	reg_444c422_vsize : uns, default = 960 ;vertical size

Table 10-3038 VDIN1_DSC_HSIZE 0x13d5

Bit(s)	R/W	Default	Description
28:16	R/W	1920	reg_detunnel_hsize : uns, default = 1920 ;
12:0	R/W	1920	reg_dither_hsize : uns, default = 1920 ;

Table 10-3039 VDIN1_DSC_DETUNNEL_SEL 0x13d6

Bit(s)	R/W	Default	Description
17:0	R/W	34658	reg_detunnel_sel : uns, default = 34658; //{3'h1,3'h0,3'h3 ,3'h5,3'h4,3'h2}

Table 10-3040 VDIN1_DSC_TUNNEL_SEL 0x13d7

Bit(s)	R/W	Default	Description
17:0	R/W	69868	reg_tunnel_sel : uns, default = 69868; //= {3'h2,3'h1 ,3'h0,3'h3 ,3'h5,3'h4};

Table 10-3041 VDIN1_HDR2_SIZE 0x13d8

Bit(s)	R/W	Default	Description
28-16	R/W	0x438	Vdin hdr2 vsize
12-0	R/W	0x780	Vdin hdr2 hsize

Table 10-3042 VDIN1_VSHRK_SIZE_M1 0x13d9

Bit(s)	R/W	Default	Description
28-16	R/W	0x10d	Vshrink input vsize m1
12-0	R/W	0x437	Vshrink input hsize m1

Table 10-3043 VDIN1_HSK_CTRL 0x13ef

Bit(s)	R/W	Default	Description
22:16	R/W	4	reg_hshrink_size, 2: 1/2 4: 1/4 hshrink, max=64: 1/64 hshrink
12:0	R/W	1920	reg_frm_hsize

Table 10-3044 VDIN1_HSK_COEF_0 0x13f0

Bit(s)	R/W	Default	Description
31:0	R/W	0	reg_hsk_coef00

Amlogic Proprietary and Confidential
Copyright © Amlogic. All rights reserved.

Table 10-3045 VDIN1_HSK_COEF_1 0x13f1

Bit(s)	R/W	Default	Description
31:0	R/W	0	reg_hsk_coef01

VDIN1_DITH_CTRL 0x13e0

Same as VPU_VENCL_DITH_CTRL

VDIN1_DITH_LUT_1 0x13e1

Same as VPU_VENCL_DITH_LUT_1

VDIN1_DITH_LUT_2 0x13e2

Same as VPU_VENCL_DITH_LUT_2

VDIN1_DITH_LUT_3 0x13e3

Same as VPU_VENCL_DITH_LUT_3

VDIN1_DITH_LUT_4 0x13e4

Same as VPU_VENCL_DITH_LUT_4

VDIN1_DITH_LUT_5 0x13e5

Same as VPU_VENCL_DITH_LUT_5

VDIN1_DITH_LUT_6 0x13e6

Same as VPU_VENCL_DITH_LUT_6

VDIN1_DITH_LUT_7 0x13e7

Same as VPU_VENCL_DITH_LUT_7

VDIN1_DITH_LUT_8 0x13e8

Same as VPU_VENCL_DITH_LUT_8

VDIN1_DITH_LUT_9 0x13e9

Same as VPU_VENCL_DITH_LUT_9

VDIN1_DITH_LUT_10 0x13ea

Same as VPU_VENCL_DITH_LUT_10

VDIN1_DITH_LUT_10 0x13eb

Same as VPU_VENCL_DITH_LUT_10

VDIN1_DITH_LUT_11 0x13ec

Same as VPU_VENCL_DITH_LUT_11

Table 10-3046 VDIN1_HSK_COEF_2 0x13f2

Bit(s)	R/W	Default	Description
31:0	R/W	0	reg_hsk_coef02

Amlogic Proprietary and Confidential
Copyright © Amlogic. All rights reserved.

Table 10-3047 VDIN1_HSK_COEF_3 0x13f3

Bit(s)	R/W	Default	Description
31:0	R/W	0	reg_hsk_coef03

Table 10-3048 VDIN1_HSK_COEF_4 0x13f4

Bit(s)	R/W	Default	Description
31:0	R/W	0	reg_hsk_coef04

Table 10-3049 VDIN1_HSK_COEF_5 0x13f5

Bit(s)	R/W	Default	Description
31:0	R/W	0	reg_hsk_coef05

Table 10-3050 VDIN1_HSK_COEF_6 0x13f6

Bit(s)	R/W	Default	Description
31:0	R/W	0	reg_hsk_coef06

Table 10-3051 VDIN1_HSK_COEF_7 0x13f7

Bit(s)	R/W	Default	Description
31:0	R/W	0	reg_hsk_coef07

Table 10-3052 VDIN1_HSK_COEF_8 0x13f8

Bit(s)	R/W	Default	Description
31:0	R/W	0	reg_hsk_coef08

Table 10-3053 VDIN1_HSK_COEF_9 0x13f9

Bit(s)	R/W	Default	Description
31:0	R/W	0	reg_hsk_coef09

Table 10-3054 VDIN1_HSK_COEF_10 0x13fa

Bit(s)	R/W	Default	Description
31:0	R/W	0	reg_hsk_coef10

Table 10-3055 VDIN1_HSK_COEF_11 0x13fb

Bit(s)	R/W	Default	Description
31:0	R/W	0	reg_hsk_coef11

Amlogic Proprietary and Confidential
Copyright © Amlogic. All rights reserved.

Table 10-3056 VDIN1_HSK_COEF_12 0x13fc

Bit(s)	R/W	Default	Description
31:0	R/W	0	reg_hsk_coef12

Table 10-3057 VDIN1_HSK_COEF_13 0x13fd

Bit(s)	R/W	Default	Description
31:0	R/W	0	reg_hsk_coef13

Table 10-3058 VDIN1_HSK_COEF_14 0x13fe

Bit(s)	R/W	Default	Description
31:0	R/W	0	reg_hsk_coef14

Table 10-3059 VDIN1_HSK_COEF_15 0x13ff

Bit(s)	R/W	Default	Description
31:0	R/W	0	reg_hsk_coef15

Table 10-3060 VI_HIST_H_START_END 0x2e01

Bit(s)	R/W	Default	Description
28-16	R/W	0	Hist_hstart, refer to VI_HIST_CTRL[1]
12-0	R/W	0	Hist_hend

Table 10-3061 VI_HIST_V_START_END 0x2e02

Bit(s)	R/W	Default	Description
28-16	R/W	0	Hist_vstart, refer to VI_HIST_CTRL[1]
12-0	R/W	0	Hist_vend

Table 10-3062 VI_HIST_MAX_MIN 0x2e03

Bit(s)	R/W	Default	Description
15-8	R	0	hist_max maximum value
7-0	R	0	hist_min minimum value

Table 10-3063 VI_HIST_SPL_VAL 0x2e04

Bit(s)	R/W	Default	Description
31-0	R	0	hist_spl_rd , counts for the total luma value

Amlogic Proprietary and Confidential
Copyright © Amlogic. All rights reserved.

Table 10-3064 VI_HIST_SPL_PIX_CNT 0x2e05

Bit(s)	R/W	Default	Description
21-0	R	0	hist_spl_pixel_count, counts for the total calculated pixels

Table 10-3065 VI_HIST_CHROMA_SUM 0x2e06

Bit(s)	R/W	Default	Description
31-0	R	0	hist_chroma_sum , counts for the total chroma value

Table 10-3066 VI_DNLP_HIST00 0x2e07

//0-255 are split to 64 bins evenly, and VDIN_DNLP_HISTXX //are the statistic number of pixels that within each bin.

Bit(s)	R/W	Default	Description
31-16	R	0	counts for the 2nd bin
15-0	R	0	counts for the 1st bin

Table 10-3067 VI_DNLP_HIST01 0x2e08

Bit(s)	R/W	Default	Description
31-16	R	0	counts for the 4th bin
15-0	R	0	counts for the 3rd bin

Table 10-3068 VI_DNLP_HIST02 0x2e09

Bit(s)	R/W	Default	Description
31-16	R	0	counts for the 6th bin
15-0	R	0	counts for the 5th bin

Table 10-3069 VI_DNLP_HIST03 0x2e0a

Bit(s)	R/W	Default	Description
31-16	R	0	counts for the 8th bin
15-0	R	0	counts for the 7th bin

Table 10-3070 VI_DNLP_HIST04 0x2e0b

Bit(s)	R/W	Default	Description
31-16	R	0	counts for the 10th bin
15-0	R	0	counts for the 9th bin

Amlogic Proprietary and Confidential
Copyright © Amlogic. All rights reserved.

Table 10-3071 VI_DNLP_HIST05 0x2e0c

Bit(s)	R/W	Default	Description
31-16	R	0	counts for the 12th bin
15-0	R	0	counts for the 11th bin

Table 10-3072 VI_DNLP_HIST06 0x2e0d

Bit(s)	R/W	Default	Description
31-16	R	0	counts for the 14th bin
15-0	R	0	counts for the 13th bin

Table 10-3073 VI_DNLP_HIST07 0x2e0e

Bit(s)	R/W	Default	Description
31-16	R	0	counts for the 16th bin
15-0	R	0	counts for the 15th bin

Table 10-3074 VI_DNLP_HIST08 0x2e0f

Bit(s)	R/W	Default	Description
31-16	R	0	counts for the 18th bin
15-0	R	0	counts for the 17th bin

Table 10-3075 VI_DNLP_HIST09 0x2e10

Bit(s)	R/W	Default	Description
31-16	R	0	counts for the 20th bin
15-0	R	0	counts for the 19th bin

Table 10-3076 VI_DNLP_HIST10 0x2e11

Bit(s)	R/W	Default	Description
31-16	R	0	counts for the 22nd bin
15-0	R	0	counts for the 21st bin

Table 10-3077 VI_DNLP_HIST11 0x2e12

Bit(s)	R/W	Default	Description
31-16	R	0	counts for the 24th bin
15-0	R	0	counts for the 23rd bin

Amlogic Proprietary and Confidential
Copyright © Amlogic. All rights reserved.

Table 10-3078 VI_DNLP_HIST12 0x2e13

Bit(s)	R/W	Default	Description
31-16	R	0	counts for the 26th bin
15-0	R	0	counts for the 25th bin

Table 10-3079 VI_DNLP_HIST13 0x2e14

Bit(s)	R/W	Default	Description
31-16	R	0	counts for the 28th bin
15-0	R	0	counts for the 27th bin

Table 10-3080 VI_DNLP_HIST14 0x2e15

Bit(s)	R/W	Default	Description
31-16	R	0	counts for the 30th bin
15-0	R	0	counts for the 29th bin

Table 10-3081 VI_DNLP_HIST15 0x2e16

Bit(s)	R/W	Default	Description
31-16	R	0	counts for the 32nd bin
15-0	R	0	counts for the 31st bin

Table 10-3082 VI_DNLP_HIST16 0x2e17

Bit(s)	R/W	Default	Description
31-16	R	0	counts for the 34th bin
15-0	R	0	counts for the 33rd bin

Table 10-3083 VI_DNLP_HIST17 0x2e18

Bit(s)	R/W	Default	Description
31-16	R	0	counts for the 36th bin
15-0	R	0	counts for the 35th bin

Table 10-3084 VI_DNLP_HIST18 0x2e19

Bit(s)	R/W	Default	Description
31-16	R	0	counts for the 38th bin
15-0	R	0	counts for the 37th bin

Amlogic Proprietary and Confidential
Copyright © Amlogic. All rights reserved.

Table 10-3085 VI_DNLP_HIST19 0x2e1a

Bit(s)	R/W	Default	Description
31-16	R	0	counts for the 40th bin
15-0	R	0	counts for the 39th bin

Table 10-3086 VI_DNLP_HIST20 0x2e1b

Bit(s)	R/W	Default	Description
31-16	R	0	counts for the 42nd bin
15-0	R	0	counts for the 41st bin

Table 10-3087 VI_DNLP_HIST21 0x2e1c

Bit(s)	R/W	Default	Description
31-16	R	0	counts for the 44th bin
15-0	R	0	counts for the 43rd bin

Table 10-3088 VI_DNLP_HIST22 0x2e1d

Bit(s)	R/W	Default	Description
31-16	R	0	counts for the 46th bin
15-0	R	0	counts for the 45th bin

Table 10-3089 VI_DNLP_HIST23 0x2e1e

Bit(s)	R/W	Default	Description
31-16	R	0	counts for the 48th bin
15-0	R	0	counts for the 47th bin

Table 10-3090 VI_DNLP_HIST24 0x2e1f

Bit(s)	R/W	Default	Description
31-16	R	0	counts for the 50th bin
15-0	R	0	counts for the 49th bin

Table 10-3091 VI_DNLP_HIST25 0x2e20

Bit(s)	R/W	Default	Description
31-16	R	0	counts for the 52nd bin
15-0	R	0	counts for the 51st bin

Amlogic Proprietary and Confidential
Copyright © Amlogic. All rights reserved.

Table 10-3092 VI_DNLP_HIST26 0x2e21

Bit(s)	R/W	Default	Description
31-16	R	0	counts for the 54th bin
15-0	R	0	counts for the 53rd bin

Table 10-3093 VI_DNLP_HIST27 0x2e22

Bit(s)	R/W	Default	Description
31-16	R	0	counts for the 56th bin
15-0	R	0	counts for the 55th bin

Table 10-3094 VI_DNLP_HIST28 0x2e23

Bit(s)	R/W	Default	Description
31-16	R	0	counts for the 58th bin
15-0	R	0	counts for the 57th bin

Table 10-3095 VI_DNLP_HIST29 0x2e24

Bit(s)	R/W	Default	Description
31-16	R	0	counts for the 60th bin
15-0	R	0	counts for the 59th bin

Table 10-3096 VI_DNLP_HIST30 0x2e25

Bit(s)	R/W	Default	Description
31-16	R	0	counts for the 62nd bin
15-0	R	0	counts for the 61st bin

Table 10-3097 VI_DNLP_HIST31 0x2e26

Bit(s)	R/W	Default	Description
31-16	R	0	counts for the 64th bin
15-0	R	0	counts for the 63rd bin

Table 10-3098 VI_DNLP_HIST31 0x2e27

Bit(s)	R/W	Default	Description
31-16	R	0	counts for the 66th bin, for white pix
15-0	R	0	counts for the 65th bin, for black pix

Amlogic Proprietary and Confidential
Copyright © Amlogic. All rights reserved.

Table 10-3099 VI_HIST_PIC_SIZE 0x2e28

Bit(s)	R/W	Default	Description
28-16	R/W	0	Hist_pic_height
12-0	R/W	0	Hist_pic_width

Table 10-3100 VI_HIST_GCLK_CTRL 0x2e2a

Bit(s)	R/W	Default	Description
5-4	R/W	0	Gated clock control of hist_clk
3-2	R/W	0	Gated clock control of clk0
1-0	R/W	0	Gated clock control of hist register clock

10.2.3.43 Osd_mali_afbcd Registers

Table 10-3101 VPU_MAFBC_BLOCK_ID 0x3a00

Bit(s)	R/W	Default	Description
31:16	R.O	0x0	PRODUCT_ID : // Contains a product-specific value
15:12	R.O	0x0	VERSION_MAJOR : // Major release number of the AFBC decoder. This is the R part of an RnPn release number.
11:4	R.O	0x0	VERSION_MINOR : // Minor release number of the AFBC decoder. This is the P part of an RnPn release number.
3:0	R.O	0x0	VERSION_STATUS : // The version status of the AFBC decoder release. Starts at 0 and increases by one for each release.

Table 10-3102 VPU_MAFBC_IRQ_RAW_STATUS 0x3a01

Bit(s)	R/W	Default	Description
5	R.O	0x0	SECURE_ID_ERROR : // Activated when an invalid TrustZone Media Protection (TZMP) transaction is detected on the TZMP1 or TZMP2 data fields.
4	R.O	0x0	AXI_ERROR : // Activated when an AXI error is detected.
3	R.O	0x0	DETILING_ERROR : // Activated when a detiling error occurs.
2	R.O	0x0	DECODE_ERROR : // Activated when decoder core indicates a decoder error.
1	R.O	0x0	CONFIGURATION_SWAPPED : // Activated when configuration has been swapped from shadow registers to configuration registers.
0	R.O	0x0	SURFACES_COMPLETED : // Activated when all enabled surfaces have completed and have been fully read out. In continuous mode, this interrupt is triggered each time all surfaces have been read out.

Amlogic Proprietary and Confidential
Copyright © Amlogic. All rights reserved.

Table 10-3103 VPU_MAFBC_IRQ_CLEAR 0x3a02

Bit(s)	R/W	Default	Description
5	R/W	0	SECURE_ID_ERROR : // unsigned , default = 0,Writing a 1 to this bit clears the corresponding bit in the IRQ_RAW_STATUS register.
4	R/W	0	AXI_ERROR : // unsigned , default = 0,Writing a 1 to this bit clears the corresponding bit in the IRQ_RAW_STATUS register.
3	R/W	0	DETILING_ERROR : // unsigned , default = 0,Writing a 1 to this bit clears the corresponding bit in the IRQ_RAW_STATUS register.
2	R/W	0	DECODE_ERROR : // unsigned , default = 0,Writing a 1 to this bit clears the corresponding bit in the IRQ_RAW_STATUS register.
1	R/W	0	CONFIGURATION_SWAPPED : // unsigned , default = 0,Writing a 1 to this bit clears the corresponding bit in the IRQ_RAW_STATUS register.
0	R/W	0	SURFACES_COMPLETED : // unsigned , default = 0,Writing a 1 to this bit clears the corresponding bit in the IRQ_RAW_STATUS register.

Table 10-3104 VPU_MAFBC_IRQ_MASK 0x3a03

Bit(s)	R/W	Default	Description
5	R/W	0	SECURE_ID_ERROR : // unsigned , default = 0,When this is set to 1, the corresponding IRQ_RAW_STATUS interrupt is enabled. When this is set to zero, the corresponding IRQ_RAW_STATUS interrupt is disabled.
4	R/W	0	AXI_ERROR : // unsigned , default = 0,When this is set to 1, the corresponding IRQ_RAW_STATUS interrupt is enabled. When this is set to zero, the corresponding IRQ_RAW_STATUS interrupt is disabled.
3	R/W	0	DETILING_ERROR : // unsigned , default = 0,When this is set to 1, the corresponding IRQ_RAW_STATUS interrupt is enabled. When this is set to zero, the corresponding IRQ_RAW_STATUS interrupt is disabled.
2	R/W	0	DECODE_ERROR : // unsigned , default = 0, When this is set to 1, the corresponding IRQ_RAW_STATUS interrupt is enabled. When this is set to zero, the corresponding IRQ_RAW_STATUS interrupt is disabled.
1	R/W	0	CONFIGURATION_SWAPPED : // unsigned , default = 0, When this is set to 1, the corresponding IRQ_RAW_STATUS interrupt is enabled. When this is set to zero, the corresponding IRQ_RAW_STATUS interrupt is disabled.
0	R/W	0	SURFACES_COMPLETED : // unsigned , default = 0, When this is set to 1, the corresponding IRQ_RAW_STATUS interrupt is enabled. When this is set to zero, the corresponding IRQ_RAW_STATUS interrupt is disabled.

Table 10-3105 VPU_MAFBC_IRQ_STATUS 0x3a04

Bit(s)	R/W	Default	Description
5	R.O	0x0	SECURE_ID_ERROR : //When this is set to 1, it asserts the corresponding external interrupt. This signals an interrupt request to the application processor.
4	R.O	0x0	AXI_ERROR : //When this is set to 1, it asserts the corresponding external interrupt. This signals an interrupt request to the application processor.
3	R.O	0x0	DETILING_ERROR : //When this is set to 1, it asserts the corresponding external interrupt. This signals an interrupt request to the application processor.
2	R.O	0x0	DECODE_ERROR : //When this is set to 1, it asserts the corresponding external interrupt. This signals an interrupt request to the application processor.

Amlogic Proprietary and Confidential
Copyright © Amlogic. All rights reserved.

Bit(s)	R/W	Default	Description
1	R.O	0x0	CONFIGURATION_SWAPPED : //When this is set to 1, it asserts the corresponding external interrupt. This signals an interrupt request to the application processor.
0	R.O	0x0	SURFACES_COMPLETED : //When this is set to 1, it asserts the corresponding external interrupt. This signals an interrupt request to the application processor.

Table 10-3106 VPU_MAFBC_COMMAND 0x3a05

Bit(s)	R/W	Default	Description
1	R/W	0x0	PENDING_SWAP : //Performs a swap of shadow registers when the current decode operations are completed. After a swap, decoding of the new surfaces starts.
0	R/W	0x0	DIRECT_SWAP : //Performs a swap of shadow registers immediately. Current decode operations are terminated before completion . After termination, decoding of the new surfaces is started

Table 10-3107 VPU_MAFBC_STATUS 0x3a06

Bit(s)	R/W	Default	Description
2	R.O	0x0	ERROR : //When this is 1, it indicates that the AFBC decoder is in an unrecoverable state and must be reset using RESETn to continue operation. This is flagged after a DETILING_ERROR.
1	R.O	0x0	SWAPPING : //When this is 1, the AFBC decoder is swapping surface configurations.
0	R.O	0x0	ACTIVE : //When this is 1, the AFBC decoder is decoding surfaces.

Table 10-3108 VPU_MAFBC_SURFACE_CFG 0x3a07

Bit(s)	R/W	Default	Description
16	R/W	0	CONTINUOUS_DECODING_ENABLE : //unsigned , default = 0,Enables continuous decoding of surfaces when it is set to 1. This bit describes what the decoder does when one set of surfaces has been completed. If this is 1, the decoder immediately begins decoding again. In this case, the configuration for the next surface depends on whether the software has performed a swap operation. If no swap is used, the same configuration is used. If this is 0, the decoder waits for a software input.
3	R/W	0	S3_ENABLE : //unsigned , default = 0,When this is 1, surface 3 enabled.
2	R/W	0	S2_ENABLE : //unsigned , default = 0,When this is 1, surface 2 enabled.
1	R/W	0	S1_ENABLE : //unsigned , default = 0,When this is 1, surface 1 enabled.
0	R/W	0	S0_ENABLE : //unsigned , default = 0,When this is 1, surface 0 enabled.

Table 10-3109 VPU_MAFBC_AXI_CFG 0x3a08

Bit(s)	R/W	Default	Description
7:4	R/W	0	CACHE : //unsigned , default = 0,This value is driven on the ARCACHEM signal.
3:0	R/W	0	QOS : //unsigned , default = 0,This value is driven on the ARQOSM signal.

Amlogic Proprietary and Confidential
Copyright © Amlogic. All rights reserved.

Table 10-3110 VPU_MAFBC_HEADER_BUF_ADDR_LOW_S0 0x3a10

Bit(s)	R/W	Default	Description
31:0	R/W	0	HEADER_BUF_ADDR : [31:0] //unsigned , default = 0,Contains bits [31:0] of the header buffer address,Bits [5:0] must be set to 0 for alignment requirements.

Table 10-3111 VPU_MAFBC_HEADER_BUF_ADDR_HIGH_S0 0x3a11

Bit(s)	R/W	Default	Description
15:0	R/W	0	HEADER_BUF_ADDR : [47:32] //unsigned , default = 0,Contains the upper 16 bits of the header buffer address

Table 10-3112 VPU_MAFBC_FORMAT_SPECIFIER_S0 0x3a12

Bit(s)	R/W	Default	Description
19	R/W	0	PAYLOAD_LIMIT_EN : // unsigned , default = 0,Enable payload read address check against the min and max payload address boundaries: 0 Disable 1 Enable. This means that out-of-bound reads output the color black.
18	R/W	0	TILED_HEADER_EN : // unsigned , default = 0,Enables tiled header mode:0 Disable tiled header 1 Enable tiled header
17:16	R/W	0	SUPER_BLOCK_ASPECT : // unsigned , default = 0,Selects superblock aspect ratio 00:16x16 pixels 01:32x8 pixels other:reserved
9	R/W	0	BLOCK_SPLIT : //unsigned , default = 0,Enables block split mode: 0 Block split mode off. 1 Block split mode on.
8	R/W	0	YUV_TRANSFORM : //unsigned , default = 0,Enables the internal YUV transform stage: 0 Internal YUV transform off. 1 Internal YUV transform on.
3:0	R/W	0	PIXEL_FORMAT : //unsigned , default = 0,Contains the pixel format configuration.

Table 10-3113 VPU_MAFBC_BUFFER_WIDTH_S0 0x3a13

Bit(s)	R/W	Default	Description
13:0	R/W	0	BUFFER_WIDTH : //unsigned , default = 0,AFBC buffer width in pixels

Table 10-3114 VPU_MAFBC_BUFFER_HEIGHT_S0 0x3a14

Bit(s)	R/W	Default	Description
13:0	R/W	0	BUFFER_HEIGHT : //unsigned , default = 0,AFBC buffer height in pixels

Table 10-3115 VPU_MAFBC_BOUNDING_BOX_X_START_S0 0x3a15

Bit(s)	R/W	Default	Description
12:0	R/W	0	BUFFER_X_START : //unsigned , default = 0,The AFBC buffer bounding box minimum x value. Given in pixels.

Amlogic Proprietary and Confidential
Copyright © Amlogic. All rights reserved.

Table 10-3116 VPU_MAFBC_BOUNDING_BOX_X_END_S0 0x3a16

Bit(s)	R/W	Default	Description
12:0	R/W	0	BUFFER_X_START : //unsigned , default = 0,The AFBC buffer bounding box maximum x value. Given in pixels.

Table 10-3117 VPU_MAFBC_BOUNDING_BOX_Y_START_S0 0x3a17

Bit(s)	R/W	Default	Description
12:0	R/W	0	BUFFER_Y_START : //unsigned , default = 0,The AFBC buffer bounding box minimum y value. Given in pixels.

Table 10-3118 VPU_MAFBC_BOUNDING_BOX_Y_END_S0 0x3a18

Bit(s)	R/W	Default	Description
12:0	R/W	0	BUFFER_Y_START : //unsigned , default = 0,The AFBC buffer bounding box maximum y value. Given in pixels.

Table 10-3119 VPU_MAFBC_OUTPUT_BUF_ADDR_LOW_S0 0x3a19

Bit(s)	R/W	Default	Description
31:0	R/W	0	OUTPUT_BUF_ADDR : [31:0] //unsigned , default = 0,Contains bits [31:0] of the output buffer address.Bits [6:0] must be set to 0 for alignment requirements. The address, frame size, and pixel format allocate area in the detiler SRAM for the current surface . You must ensure that the allocated area does not exceed the available SRAM, or overlap with other surfaces or planes that are defined in the output buffer.

Table 10-3120 VPU_MAFBC_OUTPUT_BUF_ADDR_HIGH_S0 0x3a1a

Bit(s)	R/W	Default	Description
15:0	R/W	0x0	OUTPUT_BUF_ADDR : [47:32] //Contains the upper 16 bits of the output buffer address

Table 10-3121 VPU_MAFBC_OUTPUT_BUF_STRIDE_S0 0x3a1b

Bit(s)	R/W	Default	Description
15:0	R/W	0	OUTPUT_BUF_STRIDE : [15:0] //unsigned , default = 0,Contains bits [15:0] of the output buffer stride.Bits [6:0] must be set to 0 for alignment requirements. The maximum permitted buffer stride is 8192 pixels wide. The byte size depends on the pixel format for the surface.

Table 10-3122 VPU_MAFBC_PREFETCH_CFG_S0 0x3a1c

Bit(s)	R/W	Default	Description
1	R/W	0	PREFETCH_READ_DIRECTION_Y : // unsigned , default = 0,Defines the pre-fetch read direction in Y: 0 Top to bottom 1 Bottom to top
0	R/W	0	PREFETCH_READ_DIRECTION_X : //unsigned , default = 0,Defines the pre-fetch read direction in X 0 Left to righ 1 Right to left

Amlogic Proprietary and Confidential
Copyright © Amlogic. All rights reserved.

Table 10-3123 VPU_MAFBC_PAYLOAD_MIN_LOW_S0 0x3a1d

Bit(s)	R/W	Default	Description
31:0	R/W	0	PAYLOAD_MIN_LOW : //unsigned , default = 0, Indicates the lower 32 bits of the AFBC payload buffer minimum address.

Table 10-3124 VPU_MAFBC_PAYLOAD_MIN_HIGH_S0 0x3a1e

Bit(s)	R/W	Default	Description
15:0	R/W	0	PAYLOAD_MIN_HIGH : //unsigned , default = 0, Indicates the higher 16 bits of the AFBC payload buffer minimum address.

Table 10-3125 VPU_MAFBC_PAYLOAD_MAX_LOW_S0 0x3a1f

Bit(s)	R/W	Default	Description
31:0	R/W	0x0	PAYLOAD_MIN_LOW : //unsigned , indicates the lower 32 bits of the AFBC payload buffer maximum address.

Table 10-3126 VPU_MAFBC_PAYLOAD_MAX_HIGH_S0 0x3a20

Bit(s)	R/W	Default	Description
15:0	R/W	0	PAYLOAD_MIN_HIGH : //unsigned , default = 0, Indicates the higher 16 bits of the AFBC payload buffer maximum address.

VPU_MAFBC_HEADER_BUF_ADDR_LOW_S1 0x3a30

See VPU_MAFBC_HEADER_BUF_ADDR_LOW_S0

VPU_MAFBC_HEADER_BUF_ADDR_HIGH_S1 0x3a31

See VPU_MAFBC_HEADER_BUF_ADDR_HIGH_S0

VPU_MAFBC_FORMAT_SPECIFIER_S1 0x3a32

See VPU_MAFBC_FORMAT_SPECIFIER_S0

VPU_MAFBC_BUFFER_WIDTH_S1 0x3a33

See VPU_MAFBC_BUFFER_WIDTH_S0

VPU_MAFBC_BUFFER_HEIGHT_S1 0x3a34

See VPU_MAFBC_BUFFER_HEIGHT_S0

VPU_MAFBC_BOUNDING_BOX_X_START_S1 0x3a35

See VPU_MAFBC_BOUNDING_BOX_X_START_S0

VPU_MAFBC_BOUNDING_BOX_X_END_S1 0x3a36

Amlogic Proprietary and Confidential
Copyright © Amlogic. All rights reserved.

See VPU_MAFBC_BOUNDING_BOX_X_END_S0

VPU_MAFBC_BOUNDING_BOX_Y_START_S1 0x3a37
See VPU_MAFBC_BOUNDING_BOX_Y_START_S0

VPU_MAFBC_BOUNDING_BOX_Y_END_S1 0x3a38
See VPU_MAFBC_BOUNDING_BOX_Y_END_S0

VPU_MAFBC_OUTPUT_BUF_ADDR_LOW_S1 0x3a39
See VPU_MAFBC_OUTPUT_BUF_ADDR_LOW_S0

VPU_MAFBC_OUTPUT_BUF_ADDR_HIGH_S1 0x3a3a
See VPU_MAFBC_OUTPUT_BUF_ADDR_HIGH_S0

VPU_MAFBC_OUTPUT_BUF_STRIDE_S1 0x3a3b
See VPU_MAFBC_OUTPUT_BUF_STRIDE_S0

VPU_MAFBC_PREFETCH_CFG_S1 0x3a3c
See VPU_MAFBC_PREFETCH_CFG_S0

VPU_MAFBC_PAYLOAD_MIN_LOW_S1 0x3a3d
See VPU_MAFBC_PAYLOAD_MIN_LOW_S0

VPU_MAFBC_PAYLOAD_MIN_HIGH_S1 0x3a3e
See VPU_MAFBC_PAYLOAD_MIN_HIGH_S0

VPU_MAFBC_PAYLOAD_MAX_LOW_S1 0x3a3f
See VPU_MAFBC_PAYLOAD_MAX_LOW_S0

VPU_MAFBC_PAYLOAD_MAX_HIGH_S1 0x3a40
See VPU_MAFBC_PAYLOAD_MAX_HIGH_S0

VPU_MAFBC_HEADER_BUF_ADDR_LOW_S2 0x3a50
See VPU_MAFBC_HEADER_BUF_ADDR_LOW_S0

VPU_MAFBC_HEADER_BUF_ADDR_HIGH_S2 0x3a51

Amlogic Proprietary and Confidential
Copyright © Amlogic. All rights reserved.

See VPU_MAFBC_HEADER_BUF_ADDR_HIGH_S0

VPU_MAFBC_FORMAT_SPECIFIER_S2 0x3a52
See VPU_MAFBC_FORMAT_SPECIFIER_S0

VPU_MAFBC_BUFFER_WIDTH_S2 0x3a53
See VPU_MAFBC_BUFFER_WIDTH_S0

VPU_MAFBC_BUFFER_HEIGHT_S2 0x3a54
See VPU_MAFBC_BUFFER_HEIGHT_S0

VPU_MAFBC_BOUNDING_BOX_X_START_S2 0x3a55
See VPU_MAFBC_BOUNDING_BOX_X_START_S0

VPU_MAFBC_BOUNDING_BOX_X_END_S2 0x3a56
See VPU_MAFBC_BOUNDING_BOX_X_END_S0

VPU_MAFBC_BOUNDING_BOX_Y_START_S2 0x3a57
See VPU_MAFBC_BOUNDING_BOX_Y_START_S0

VPU_MAFBC_BOUNDING_BOX_Y_END_S2 0x3a58
See VPU_MAFBC_BOUNDING_BOX_Y_END_S0

VPU_MAFBC_OUTPUT_BUF_ADDR_LOW_S2 0x3a59
See VPU_MAFBC_OUTPUT_BUF_ADDR_LOW_S0

VPU_MAFBC_OUTPUT_BUF_ADDR_HIGH_S2 0x3a5a
See VPU_MAFBC_OUTPUT_BUF_ADDR_HIGH_S0

VPU_MAFBC_OUTPUT_BUF_STRIDE_S2 0x3a5b
See VPU_MAFBC_OUTPUT_BUF_STRIDE_S0

VPU_MAFBC_PREFETCH_CFG_S2 0x3a5c
See VPU_MAFBC_PREFETCH_CFG_S0

VPU_MAFBC_PAYLOAD_MIN_LOW_S2 0x3a5d
See VPU_MAFBC_PAYLOAD_MIN_LOW_S0

Amlogic Proprietary and Confidential
Copyright © Amlogic. All rights reserved.

VPU_MAFBC_PAYLOAD_MIN_HIGH_S2 0x3a5e
See VPU_MAFBC_PAYLOAD_MIN_HIGH_S0

VPU_MAFBC_PAYLOAD_MAX_LOW_S2 0x3a5f
See VPU_MAFBC_PAYLOAD_MAX_LOW_S0

VPU_MAFBC_PAYLOAD_MAX_HIGH_S2 0x3a60
See VPU_MAFBC_PAYLOAD_MAX_HIGH_S0

VPU_MAFBC_HEADER_BUF_ADDR_LOW_S3 0x3a70
See VPU_MAFBC_HEADER_BUF_ADDR_LOW_S0

VPU_MAFBC_HEADER_BUF_ADDR_HIGH_S3 0x3a71
See VPU_MAFBC_HEADER_BUF_ADDR_HIGH_S0

VPU_MAFBC_FORMAT_SPECIFIER_S3 0x3a72
See VPU_MAFBC_FORMAT_SPECIFIER_S0

VPU_MAFBC_BUFFER_WIDTH_S3 0x3a73
See VPU_MAFBC_BUFFER_WIDTH_S0

VPU_MAFBC_BUFFER_HEIGHT_S3 0x3a74
See VPU_MAFBC_BUFFER_HEIGHT_S0

VPU_MAFBC_BOUNDING_BOX_X_START_S3 0x3a75
See VPU_MAFBC_BOUNDING_BOX_X_START_S0

VPU_MAFBC_BOUNDING_BOX_X_END_S3 0x3a76
See VPU_MAFBC_BOUNDING_BOX_X_END_S0

VPU_MAFBC_BOUNDING_BOX_Y_START_S3 0x3a77
See VPU_MAFBC_BOUNDING_BOX_Y_START_S0

Amlogic Proprietary and Confidential
Copyright © Amlogic. All rights reserved.

VPU_MAFBC_BOUNDING_BOX_Y_END_S3 0x3a78
See VPU_MAFBC_BOUNDING_BOX_Y_END_S0

VPU_MAFBC_OUTPUT_BUF_ADDR_LOW_S3 0x3a79
See VPU_MAFBC_OUTPUT_BUF_ADDR_LOW_S0

VPU_MAFBC_OUTPUT_BUF_ADDR_HIGH_S3 0x3a7a
See VPU_MAFBC_OUTPUT_BUF_ADDR_HIGH_S0

VPU_MAFBC_OUTPUT_BUF_STRIDE_S3 0x3a7b
See VPU_MAFBC_OUTPUT_BUF_STRIDE_S0

VPU_MAFBC_PREFETCH_CFG_S3 0x3a7c
See VPU_MAFBC_PREFETCH_CFG_S0

VPU_MAFBC_PAYLOAD_MIN_LOW_S3 0x3a7d
See VPU_MAFBC_PAYLOAD_MIN_LOW_S0

VPU_MAFBC_PAYLOAD_MIN_HIGH_S3 0x3a7e
See VPU_MAFBC_PAYLOAD_MIN_HIGH_S0

VPU_MAFBC_PAYLOAD_MAX_LOW_S3 0x3a7f
See VPU_MAFBC_PAYLOAD_MAX_LOW_S0

VPU_MAFBC_PAYLOAD_MAX_HIGH_S3 0x3a80
See VPU_MAFBC_PAYLOAD_MAX_HIGH_S0

10.2.3.44 Primesl Registers

Table 10-3127 PRIMESL_LUTC_ADDR_PORT 0x3980

Bit(s)	R/W	Default	Description
8: 0	R/W	0	lutc_addr : // unsigned , default = 0 = 'h0,

Table 10-3128 PRIMESL_LUTC_DATA_PORT 0x3981

Bit(s)	R/W	Default	Description
10: 0	R/W	0	lutc_data : // unsigned , default = 0 = 'h0,

Amlogic Proprietary and Confidential
Copyright © Amlogic. All rights reserved.

Table 10-3129 PRIMESL_LUTP_ADDR_PORT 0x3982

Bit(s)	R/W	Default	Description
8: 0	R/W	0	lutp_addr : // unsigned , default = 0 = 'h0,

Table 10-3130 PRIMESL_LUTP_DATA_PORT 0x3983

Bit(s)	R/W	Default	Description
13: 0	R/W	0	lutp_data : // unsigned , default = 0 = 'h0,

Table 10-3131 PRIMESL_LUTD_ADDR_PORT 0x3984

Bit(s)	R/W	Default	Description
8: 0	R/W	0	lutd_data : // unsigned , default = 0 = 'h0,

Table 10-3132 PRIMESL_LUTD_DATA_PORT 0x3985

Bit(s)	R/W	Default	Description
11: 0	R/W	0	lutd_data : // unsigned , default = 0 = 'h0,

Table 10-3133 PRIMESL_CTRL0 0x3990

Bit(s)	R/W	Default	Description
29	R/W	0	legacy_mode_en : // unsigned , default = 0 = 'h0
28	R/W	1	clip_en : // unsigned , default = 1 = 'h0
26:16	R/W	0	inv_chroma_ratio : // unsigned , default = 0 = 'h0,
14: 4	R/W	0	inv_y_ratio : // unsigned , default = 0 = 'h0,
3	R/W	0	reg_gclk_ctrl : // unsigned , default = 0 = 'h0,
2: 1	R/W	0	gclk_ctrl : // unsigned , default = 0 = 'h0,
0	R/W	1	primesl_en : // unsigned , default = 1 = 'h0,

Table 10-3134 PRIMESL_CTRL1 0x3991

Bit(s)	R/W	Default	Description
25:16	R/W	0	l_headroom : // unsigned , default = 0 = 'h0,
9: 0	R/W	0	footroom : // unsigned , default = 0 = 'h0,

Table 10-3135 PRIMESL_CTRL2 0x3992

Bit(s)	R/W	Default	Description
9: 0	R/W	0	c_headroom : // unsigned , default = 0 = 'h0,

Amlogic Proprietary and Confidential
Copyright © Amlogic. All rights reserved.

Table 10-3136 PRIMESL_CTRL3 0x3993

Bit(s)	R/W	Default	Description
29:16	R/W	0	mub : // unsigned , default = 0 = 'h0,
13: 0	R/W	0	mua : // unsigned , default = 0 = 'h0,

Table 10-3137 PRIMESL_CTRL4 0x3994

Bit(s)	R/W	Default	Description
25:16	R/W	0	oct_7_1 : // signed , default = 0 = 'h0,
9: 0	R/W	0	oct_7_0 : // signed , default = 0 = 'h0,

Table 10-3138 PRIMESL_CTRL5 0x3995

Bit(s)	R/W	Default	Description
25:16	R/W	0	oct_7_3 : // signed , default = 0 = 'h0,
9: 0	R/W	0	oct_7_2 : // signed , default = 0 = 'h0,

Table 10-3139 PRIMESL_CTRL6 0x3996

Bit(s)	R/W	Default	Description
25:16	R/W		oct_7_5 : // signed , default = 0 = 'h0,
9: 0	R/W		oct_7_4 : // signed , default = 0 = 'h0,

Table 10-3140 PRIMESL_CTRL7 0x3997

Bit(s)	R/W	Default	Description
9: 0	R/W	0	oct_7_6 : // signed , default = 0 = 'h0,

Table 10-3141 PRIMESL_CTRL8 0x3998

Bit(s)	R/W	Default	Description
28:16	R/W	0	d_lut_threshold_3_1 : // unsigned , default = 0 = 'h0,
12: 0	R/W	0	d_lut_threshold_3_0 : // unsigned , default = 0 = 'h0,

Table 10-3142 PRIMESL_CTRL9 0x3999

Bit(s)	R/W	Default	Description
12: 0	R/W	0	d_lut_threshold_3_2 : // unsigned , default = 0 = 'h0,

Amlogic Proprietary and Confidential
Copyright © Amlogic. All rights reserved.

Table 10-3143 PRIMESL_CTRL10 0x399a

Bit(s)	R/W	Default	Description
15:12	R/W	0	d_lut_step_4_3 : // unsigned , default = 0 = 'h0,
11: 8	R/W	0	d_lut_step_4_2 : // unsigned , default = 0 = 'h0,
7: 4	R/W	0	d_lut_step_4_1 : // unsigned , default = 0 = 'h0,
3: 0	R/W	0	d_lut_step_4_0 : // unsigned , default = 0 = 'h0,

Table 10-3144 PRIMESL_CTRL11 0x399b

Bit(s)	R/W	Default	Description
28:16	R/W	0	rgb2yuv_9_0 : // signed , default = 0 = 'h0,
12: 0	R/W	0	rgb2yuv_9_1 : // signed , default = 0 = 'h0,

Table 10-3145 PRIMESL_CTRL12 0x399c

Bit(s)	R/W	Default	Description
28:16	R/W	0	rgb2yuv_9_2 : // signed , default = 0 = 'h0,
12: 0	R/W	0	rgb2yuv_9_3 : // signed , default = 0 = 'h0,

Table 10-3146 PRIMESL_CTRL13 0x399d

Bit(s)	R/W	Default	Description
28:16	R/W	0	rgb2yuv_9_4 : // signed , default = 0 = 'h0,
12: 0	R/W	0	rgb2yuv_9_5 : // signed , default = 0 = 'h0,

Table 10-3147 PRIMESL_CTRL14 0x399e

Bit(s)	R/W	Default	Description
28:16	R/W	0	rgb2yuv_9_6 : // signed , default = 0 = 'h0,
12: 0	R/W	0	rgb2yuv_9_7 : // signed , default = 0 = 'h0,

Table 10-3148 PRIMESL_CTRL15 0x399f

Bit(s)	R/W	Default	Description
12: 0	R/W	0	rgb2yuv_9_8 : // signed , default = 0 = 'h0,

Table 10-3149 PRIMESL_CTRL16 0x39e0

Bit(s)	R/W	Default	Description
31	R/W	0	reserved
30	R/W	0	byp_s_lut://unsigned
29	R/W	0	byp_d_lut://unsigned

Amlogic Proprietary and Confidential
Copyright © Amlogic. All rights reserved.

Bit(s)	R/W	Default	Description
28	R/W	0	byp_mat://unsigned
27	R/W	0	rgb_swap://unsigned
26:24	R/W	0	uv_shift://unsigned
23:22	R/W	0	rgb_shift://unsigned
21:20	R/W	3	rgb_clip://unsigned
19:18	R/W	/	reserved
17:16	R/W	0	rgb_s://unsigned
15:14	R/W	/	reserved
13:0	R/W	1024	reg_s://signed

Table 10-3150 PRIMESL_OMAT_OFFSET0 0x39e1

Bit(s)	R/W	Default	Description
31:28	R/W	/	reserved
27:16	R/W	512	pre_offset0// unsigned , default = 0 = 512,
15:12	R/W	/	reserved
11: 0	R/W	512	pre_offset1: // unsigned , default = 0 = 512,

Table 10-3151 PRIMESL_OMAT_OFFSET1 0x39e2

Bit(s)	R/W	Default	Description
31:28	R/W	/	reserved
27:16	R/W	512	pre_offset2// unsigned , default = 0 = 512,
15:12	R/W	/	reserved
11: 0	R/W	256	Offset0: // unsigned , default = 0 = 512,

Table 10-3152 PRIMESL_OMAT_OFFSET2 0x39e3

Bit(s)	R/W	Default	Description
31:28	R/W	/	reserved
27:16	R/W	2048	offset1// unsigned , default = 0 = 512,
15:12	R/W	/	reserved
11: 0	R/W	2048	offset2: // unsigned , default = 0 = 512,

Amlogic Proprietary and Confidential
Copyright © Amlogic. All rights reserved.

10.2.3.45 VADJ1/RGB_CONBRI Registers

Table 10-3153 VPP_VADJ1_MISC 0x3280

Bit(s)	R/W	Default	Description
5:4	R/W	0	Gate clk ctrl for vadj1
3	/	/	/
2	R/W	0	Sync enable 1:vadj1 regs work when go_field come 1:vadj1 regs directly
1	R/W	0	minus black level enable for vadj1
0	R/W	0	Module enable

Table 10-3154 VPP_VADJ1_BLACK_VAL 0X3281

Bit(s)	R/W	Default	Description
26:16	R/W	13'h200	Black_luma
10:0	R/W	13'h40	Black_chroma

Table 10-3155 VPP_VADJ1_Y 0x3282

Bit(s)	R/W	Default	Description
18-8	R/W	0	brightness, signed value
7-0	R/W	0x1d0	contrast, unsigned value, contrast from 0 <= contrast <2

Table 10-3156 VPP_VADJ1_MA_MB 0x3283

cb' = cb*ma + cr*mb cr' = cb*mc + cr*md

Bit(s)	R/W	Default	Description
25-16	R/W	0x100	MA, signed value, -2 < MA < 2
9-0	R/W	0	MB, signed value ,-2 < MB < 2

Table 10-3157 VPP_VADJ1_MC_MD 0x3284

Bit(s)	R/W	Default	Description
25-16	R/W	0	MC, signed value, -2 < MC < 2
9-0	R/W	0x100	MD, signed value ,-2 < MD < 2

Table 10-3158 VPP_VADJ1_CURV_0 0x3285

Bit(s)	R/W	Default	Description
31:24	R/W	0	vadj1_softcon_curv0_ci, u8
23:12	R/W	0	vadj1_softcon_curv0_b, u12
11:0	R/W	0	vadj1_softcon_curv0_a, s12

Amlogic Proprietary and Confidential
Copyright © Amlogic. All rights reserved.

Table 10-3159 VPP_VADJ1_CURV_1 0x3286

Bit(s)	R/W	Default	Description
31:13			Reserved
12:4	R/W	0	vadj1_softcon_curv0_g, s9
3			Reserved
2:0	R/W	0	vadj1_softcon_curv0_cs, u3

Table 10-3160 VPP_VADJ1_CURV_2 0x3287

Bit(s)	R/W	Default	Description
31:24	R/W	0	vadj1_softcon_curv1_ci, u8
23:12	R/W	0	vadj1_softcon_curv1_b, u12
11:0	R/W	0	vadj1_softcon_curv1_a, s12

Table 10-3161 VPP_VADJ1_CURV_3 0x3288

Bit(s)	R/W	Default	Description
31:13			Reserved
12:4	R/W	0	vadj1_softcon_curv1_g, s9
3			Reserved
2:0	R/W	0	vadj1_softcon_curv1_cs, u3

Table 10-3162 VPP_VD1_RGB_CTRST 0x3289

Bit(s)	R/W	Default	Description
31:28			Reserved
27:16	R/W	1024	Vd1_rgb_ctrst: contrast for rgb, normalized 1024 as ‘1.0’
15			Reserved
14:2	R/W	64	Vd1_rgb_ctrst_blklvl: contrast black level to be subtract before and add back after the contrast gain operation
1	R/W	0	Vd1_rgbbst_en: 1 to enable the RGB_BST
0	R/W	1	Vd1_rgb_ctrst_prt: enable signal to protect saturation in rgb (no clipping) during contrast adjustment

Table 10-3163 VPP_VD1_RGB_BRGHT 0x328A

Bit(s)	R/W	Default	Description
31:14			Reserved
13:2	R/W	0	Vd1_rgb_brght: brightness level in rgb domain

Amlogic Proprietary and Confidential
Copyright © Amlogic. All rights reserved.

Bit(s)	R/W	Default	Description
1	R/W	1	Vd1_rgb_brght_prt: enable signal to protect saturation in rgb (no clipping) during brightness adjustment
0	R/W	0	Vd1_rgb_ctrst_dlut_x2: Enable signal to do x2 to the dlut cells before subtracting from the normalized gain_max; 0:x1 1:x2

Table 10-3164 VPP_VD1_RGB_DLUT_0_3 0x328B

Bit(s)	R/W	Default	Description
31:24	R/W	255	Vd1_rgbbst_dlut0: Differential gain to normalized gain_max to customized protection curve. e.g. [255 205 171 147 128 113 102 93 85 78 73 68] for protection of not boost for pixels larger than 240
23:16	R/W	205	Vd1_rgbbst_dlut1: same as Vd1_rgbbst_dlut0
15:8	R/W	171	Vd1_rgbbst_dlut2: same as Vd1_rgbbst_dlut0
7:0	R/W	147	Vd1_rgbbst_dlut3: same as Vd1_rgbbst_dlut0

Table 10-3165 VPP_VD1_RGB_DLUT_4_7 0x328c

Bit(s)	R/W	Default	Description
31:24	R/W	128	Vd1_rgbbst_dlut4: same as Vd1_rgbbst_dlut0
23:16	R/W	113	Vd1_rgbbst_dlut5: same as Vd1_rgbbst_dlut0
15:8	R/W	102	Vd1_rgbbst_dlut6: same as Vd1_rgbbst_dlut0
7:0	R/W	93	Vd1_rgbbst_dlut7: same as Vd1_rgbbst_dlut0

Table 10-3166 VPP_VD1_RGB_DLUT_8_11 0x328d

Bit(s)	R/W	Default	Description
31:24	R/W	85	Vd1_rgbbst_dlut8: same as Vd1_rgbbst_dlut0
23:16	R/W	78	Vd1_rgbbst_dlut9: same as Vd1_rgbbst_dlut0
15:8	R/W	73	Vd1_rgbbst_dlut10: same as Vd1_rgbbst_dlut0
7:0	R/W	68	Vd1_rgbbst_dlut11: same as Vd1_rgbbst_dlut0

Table 10-3167 VPP_VADJ2_MISC 0x32a0

Bit(s)	R/W	Default	Description
5:4	R/W	0	Gate clk ctrl for vadj2
3	/	/	/
2	R/W	0	Sync enable 1:vadj2 regs work when go_field come 1:vadj2 regs directly
1	R/W	0	minus black level enable for vadj2
0	R/W	0	Module enable

Amlogic Proprietary and Confidential
Copyright © Amlogic. All rights reserved.

Table 10-3168 VPP_VADJ2_BLACK_VAL 0X32a1

Bit(s)	R/W	Default	Description
26:16	R/W	13'h200	Black_luma
10:0	R/W	13'h40	Black_chroma

Table 10-3169 VPP_VADJ2_Y 0x32a2

Bit(s)	R/W	Default	Description
18-8	R/W	0	brightness, signed value
7-0	R/W	0x1d0	contrast, unsigned value, contrast from 0 <= contrast <2

Table 10-3170 VPP_VADJ2_MA_MB 0x32a3

cb' = cb*ma + cr*mb cr' = cb*mc + cr*md

Bit(s)	R/W	Default	Description
25-16	R/W	0x100	MA, signed value, -2 < MA < 2
9-0	R/W	0	MB, signed value ,-2 < MB < 2

Table 10-3171 VPP_VADJ2_MC_MD 0x32a4

Bit(s)	R/W	Default	Description
25-16	R/W	0	MC, signed value, -2 < MC < 2
9-0	R/W	0x100	MD, signed value ,-2 < MD < 2

Table 10-3172 VPP_VADJ2_CURV_0 0x32a5

Bit(s)	R/W	Default	Description
31:24	R/W	0	Vadj2_softcon_curv0_ci, u8
23:12	R/W	0	Vadj2_softcon_curv0_b, u12
11:0	R/W	0	Vadj2_softcon_curv0_a, s12

Table 10-3173 VPP_VADJ2_CURV_1 0x32a6

Bit(s)	R/W	Default	Description
31:13			Reserved
12:4	R/W	0	Vadj2_softcon_curv0_g, s9
3			Reserved
2:0	R/W	0	Vadj2_softcon_curv0_cs, u3

Amlogic Proprietary and Confidential
Copyright © Amlogic. All rights reserved.

Table 10-3174 VPP_VADJ2_CURV_2 0x32a7

Bit(s)	R/W	Default	Description
31:24	R/W	0	Vadj2_softcon_curv1_ci, u8
23:12	R/W	0	Vadj2_softcon_curv1_b, u12
11:0	R/W	0	Vadj2_softcon_curv1_a, s12

Table 10-3175 VPP_VADJ2_CURV_3 0x32a8

Bit(s)	R/W	Default	Description
31:13			Reserved
12:4	R/W	0	Vadj2_softcon_curv1_g, s9
3			Reserved
2:0	R/W	0	Vadj2_softcon_curv1_cs, u3

Table 10-3176 VPP_POST_RGB_CTRST 0x32a9

Bit(s)	R/W	Default	Description
31:28			Reserved
27:16	R/W	1024	Post_rgb_ctrst: contrast for rgb, normalized 1024 as ‘1.0’
15:12			Reserved
11:2	R/W	64	Post_rgb_ctrst_blklvl: contrast black level to be subtract before and add back after the contrast gain operation
1	R/W	0	Post_rgbbst_en: 1 to enable the RGB_BST
0	R/W	1	Post_rgb_ctrst_prt: enable signal to protect saturation in rgb (no clipping) during contrast adjustment

Table 10-3177 VPP_POST_RGB_BRGHT 0x32aa

Bit(s)	R/W	Default	Description
31:14			Reserved
13:2	R/W	0	Post_rgb_brght: brightness level in rgb domain
1	R/W	1	Post_rgb_brght_prt: enable signal to protect saturation in rgb (no clipping) during brightness adjustment
0	R/W	0	Post_rgb_ctrst_dlut_x2: Enable signal to do x2 to the dlut cells before subtracting from the normalized gain_max; 0:x1 1:x2

Table 10-3178 VPP_POST_RGB_DLUT_0_3 0x32ab

Bit(s)	R/W	Default	Description
31:24	R/W	255	Post_rgbbst_dlut0: Differential gain to normalized gain_max to customized protection curve. e.g. [255 205 171 147 128 113 102 93 85 78 73 68] for protection of not boost for pixels larger than 240
23:16	R/W	205	Post_rgbbst_dlut1: same as Post_rgbbst_dlut0

Amlogic Proprietary and Confidential
Copyright © Amlogic. All rights reserved.

Bit(s)	R/W	Default	Description
15:8	R/W	171	Post_rgbbst_dlut2: same as Post_rgbbst_dlut0
7:0	R/W	147	Post_rgbbst_dlut3: same as Post_rgbbst_dlut0

Table 10-3179 VPP_POST_RGB_DLUT_4_7 0x32ac

Bit(s)	R/W	Default	Description
31:24	R/W	128	Post _rgbbst_dlut4: same as Post_rgbbst_dlut0
23:16	R/W	113	Post _rgbbst_dlut5: same as Post_rgbbst_dlut0
15:8	R/W	102	Post _rgbbst_dlut6: same as Post_rgbbst_dlut0
7:0	R/W	93	Post _rgbbst_dlut7: same as Post_rgbbst_dlut0

Table 10-3180 VPP_POST_RGB_DLUT_8_11 0x32ad

Bit(s)	R/W	Default	Description
31:24	R/W	85	Post_rgbbst_dlut8: same as Post_rgbbst_dlut0
23:16	R/W	78	Post_rgbbst_dlut9: same as Post_rgbbst_dlut0
15:8	R/W	73	Post_rgbbst_dlut10: same as Post_rgbbst_dlut0
7:0	R/W	68	Post_rgbbst_dlut11: same as Post_rgbbst_dlut0

Table 10-3181 VPP_POST_MATRIX_SAT 0x32c1

Bit(s)	R/W	Default	Description
2	R/W	85	Sato_en
1	R/W	78	Sati_en
0	R/W	73	Misc_sat_en

10.2.3.46 3D LUT Registers

Table 10-3182 VPP_LUT3D_CTRL 0x39d0

Bit(s)	R/W	Default	Description
9:8	R/W	0	Gated clock control
7	R/W		reserved
6:4	R/W		reg_lut3d_extnd_en: enable to set LUT value of 1023 to value 1024.
3	R/W		reserved
2	R/W	0	1 to shaddow the “reg_lut3d_enable” by VSYNC
1	R/W		reserved
0	R/W	0	reg_lut3d_enable: 1 to enable 3D LUT

Amlogic Proprietary and Confidential
Copyright © Amlogic. All rights reserved.

Table 10-3183 VPP_LUT3D_CBUS2RAM_CTRL 0x39d1

Bit(s)	R/W	Default	Description
0	R/W	0	1 to enable CBUS to configure the LUT3D RAMs, 0 for in normal working status.

Table 10-3184 VPP_LUT3D_RAM_ADDR 0x39d2

Bit(s)	R/W	Default	Description
32	R/W	0	LUT3D RAMs Address port

Table 10-3185 VPP_LUT3D_RAM_DATA 0x39d3

Bit(s)	R/W	Default	Description
32	R/W	0	LUT3D RAMs data port

10.2.3.47 VPP GAMMA Registers

Table 10-3186 VPP_GAMMA_CTRL 0x39d4

Bit(s)	R/W	Default	Description
31:10	R/W	0	Reserved
9:7	R/W	0	Reg_soft_mode
6	R/W	0	Reg_enc_rst_mode
5	R/W	0	Reg_enc_en_mode
2:1	R/W	0	Reg_gclk_ctrl
0	R/W	0	Reg_gamma_en

VPP_GAMMA_BIN_ADDR 0x39d5

VPP_GAMMA_BIN_DATA 0x39d6

10.2.3.48 AFBCE Registers

Table 10-3187 AFBCE_ENABLE 0x41a0

Bit(s)	R/W	Default	Description
31:20	R/W	0	gclk_ctrl : unsigned , default = 0, gclk_ctrl of afbe submodule
19:16	R/W	0	afbce_sync_sel : unsigned , default = 0, shadow aome size/scope/mode registers in afnce
13	R/W	0	enc_rst_mode : unsigned , default = 0, 1: chose pulse rst mode ,need write a pule by
12	R/W	0	enc_en_mode : unsigned , default = 0, 1: chose pulse staert mode, need write a pule by AFBCE_ENABLE[0],0:automatic start
8	R/W	0	enc_enable : unsigned , default = 0, 1: open mode 0:close module
0	R/W	0	Afbce start encod pulse ,active when AFBCE_ENABLE[12] high

Amlogic Proprietary and Confidential
Copyright © Amlogic. All rights reserved.

Table 10-3188 AFBCE_MODE 0x41a1

Bit(s)	R/W	Default	Description
31:29	R/W	0	soft_rst : unsigned, default = 0 ,bit[0] async rst [1] sync rst [2] sync rst by vsync
27:26	R/W	0	rev_mode : unsigned, default = 0 , reverse mode
25:24	R/W	3	mif_urgent : unsigned, default = 3 , info mif and data mif urgent
22:16	R/W	4	hold_line_num : unsigned, default = 4, hold_line_num
15:14	R/W	1	burst_mode : unsigned, default = 1, 0: burst1 1:burst2 2:burst4
0	R/W	0	reg_fmt444_comb : unsigned, default = 0, 0: 444 8bit comb mode

Table 10-3189 AFBCE_SIZE_IN 0x41a2

Bit(s)	R/W	Default	Description
28:16	R/W	1920	hsize_in : unsigned, default = 1920 , pic size in unit: pixel
12:0	R/W	1080	vsize_in : unsigned, default = 1080 , pic size in unit: pixel

Table 10-3190 AFBCE_BLK_SIZE_IN 0x41a3

Bit(s)	R/W	Default	Description
28:16	R/W	60	hblk_size : unsigned, default = 60 , blk horz size out unit: 32*4 block
12:0	R/W	270	vblk_size : unsigned, default = 270, blk vert size out unit: 32*4 block

Table 10-3191 AFBCE_HEAD_BADDR 0x41a4

Bit(s)	R/W	Default	Description
31:0	R/W	0x00	head_baddr : unsigned, default = 32'h00,head_baddr

Table 10-3192 AFBCE_MIF_SIZE 0x41a5

Bit(s)	R/W	Default	Description
29:28	R/W	32	ddr_blk_size : unsigned, default = 32'd1,ddr_blk_size
26:24	R/W	32	cmd_blk_size : unsigned, default = 32'd3,cmd_blk_size
20:16	R/W	32	uncmp_size : unsigned, default = 32'd20 ,uncmp_size of a uncompressed 32*4 block
15:0	R/W	32	mmu_page_size : unsigned, default = 32'd4096,mmu_page_size 4096/8192

Amlogic Proprietary and Confidential
Copyright © Amlogic. All rights reserved.

Table 10-3193 AFBCE_PIXEL_IN_HOR_SCOPE 0x41a6

Bit(s)	R/W	Default	Description
28:16	R/W	1919	enc_win_end_h : unsigned, default = 1919 ,pic scope in end,should be a integer multipe of 32 //
12:0	R/W	0	enc_win_bgn_h : unsigned, default = 0 ,pic scope in bgn,should be a integer multipe of 32//

Table 10-3194 AFBCE_PIXEL_IN_VER_SCOPE 0x41a7

Bit(s)	R/W	Default	Description
28:16	R/W	1079	enc_win_end_v : unsigned, default = 1079 ,pic scope in end,should be a integer multipe of 4 //
12:0	R/W	0	enc_win_bgn_v : unsigned, default = 0 ,pic scope in bgn,should be a integer multipe of 4 //

Table 10-3195 AFBCE_CONV_CTRL 0x41a8

Bit(s)	R/W	Default	Description
28:16	R/W	2048	fmt_ybuf_depth : unsigned, default = 2048,fmt_ybuf_depth,fixed
11: 0	R/W	256	lbuf_depth : unsigned, default = 256, lbuf_depth,fixed

Table 10-3196 AFBCE_MIF_HOR_SCOPE 0x41a9

Bit(s)	R/W	Default	Description
25:16	R/W	0	blk_end_h : unsigned, default = 0 ,blk scope out end,should be a integer multipe of 4 //
9:0	R/W	59	blk_bgn_h : unsigned, default = 59 ,blk scope out bgn,should be a integer multipe of 4 //

Table 10-3197 AFBCE_MIF_VER_SCOPE 0x41aa

Bit(s)	R/W	Default	Description
27:16	R/W	0	blk_end_v : unsigned, default = 0 ,blk scope out end,should be a integer multipe of 4 //
11:0	R/W	269	blk_bgn_v : unsigned, default = 269 ,blk scope out bgn,should be a integer multipe of 4 //

Table 10-3198 AFBCE_STAT1 0x41ab

Bit(s)	R/W	Default	Description
31	R.O	0	ro_frm_end_pulse1 : unsigned, RO,default = 0 ;frame end status
30:0	R.O	0	ro_dbg_top_info1 : unsigned, RO,default = 0 ,ro_dbg_top_info1

Amlogic Proprietary and Confidential
Copyright © Amlogic. All rights reserved.

Table 10-3199 AFBCE_STAT2 0x410c

Bit(s)	R/W	Default	Description
30:0	R.O	0	ro_dbg_top_info2 : unsigned, RO,default = 0 ,ro_dbg_top_info2

Table 10-3200 AFBCE_FORMAT 0x41ad

Bit(s)	R/W	Default	Description
9: 8	R/W	2	reg_format_mode : // unsigned , RW, default = 2 data format;0 : YUV444, 1: YUV422, 2:YUV420, 3:RGB
7: 4	R/W	10	reg_compbits_c : // unsigned , RW, default = 10 chroma bitwidth 8 or 10
3: 0	R/W	10	reg_compbits_y : // unsigned , RW, default = 10 luma bitwidth 8 or 10

Table 10-3201 AFBCE_MODE_EN 0x41ae

Bit(s)	R/W	Default	Description
25	R/W	0	reg_adpt_interleave_ymode : // unsigned , RW, default = 0 force 0 to disable it: no HW implementation
24	R/W	0	reg_adpt_interleave_cmode : // unsigned , RW, default = 0 force 0 to disable it: not HW implementation
23	R/W	1	reg_adpt_yinterleave_luma_ride : // unsigned , RW, default = 1 vertical interleave piece luma reorder ride; 0: no reorder ride; 1: w/4 as ride
22	R/W	1	reg_adpt_yinterleave_chrm_ride : // unsigned , RW, default = 1 vertical interleave piece chroma reorder ride; 0: no reorder ride; 1: w/2 as ride
21	R/W	1	reg_adpt_xinterleave_luma_ride : // unsigned , RW, default = 1 vertical interleave piece luma reorder ride; 0: no reorder ride; 1: w/4 as ride
20	R/W	1	reg_adpt_xinterleave_chrm_ride : // unsigned , RW, default = 1 vertical interleave piece chroma reorder ride; 0: no reorder ride; 1: w/2 as ride
18	R/W	0	reg_disable_order_mode_i_6 : // unsigned , RW, default = 0 disable order mode0~6: each mode with one disable bit: 0: no disable, 1: disable
17	R/W	0	reg_disable_order_mode_i_5 : // unsigned , RW, default = 0 disable order mode0~6: each mode with one disable bit: 0: no disable, 1: disable
16	R/W	0	reg_disable_order_mode_i_4 : // unsigned , RW, default = 0 disable order mode0~6: each mode with one disable bit: 0: no disable, 1: disable
15	R/W	0	reg_disable_order_mode_i_3 : // unsigned , RW, default = 0 disable order mode0~6: each mode with one disable bit: 0: no disable, 1: disable
14	R/W	0	reg_disable_order_mode_i_2 : // unsigned , RW, default = 0 disable order mode0~6: each mode with one disable bit: 0: no disable, 1: disable
13	R/W	0	reg_disable_order_mode_i_1 : // unsigned , RW, default = 0 disable order mode0~6: each mode with one disable bit: 0: no disable, 1: disable
12	R/W	0	reg_disable_order_mode_i_0 : // unsigned , RW, default = 0 disable order mode0~6: each mode with one disable bit: 0: no disable, 1: disable
10	R/W	0	reg_minval_yenc_en : // unsigned , RW, default = 0 force disable, final decision to remove this ws 1% performance loss
9	R/W	0	reg_16x4block_enable : // unsigned , RW, default = 0 block as mission, but permit 16x4 block
8	R/W	0	reg_uncompress_split_mode : // unsigned , RW, default = 0 0: no split; 1: split

Amlogic Proprietary and Confidential
Copyright © Amlogic. All rights reserved.

Bit(s)	R/W	Default	Description
5	R/W	0	reg_input_padding_uv128 : // unsigned , RW, default = 0 input picture 32x4 block gap mode: 0: pad uv=0; 1: pad uv=128
4	R/W	0	reg_dwds_padding_uv128 : // unsigned , RW, default = 0 downsampled image for double write 32x gap mode: 0: pad uv=0; 1: pad uv=128
3: 1	R/W	0	reg_force_order_mode_value : // unsigned , RW, default = 0 force order mode 0~7
0	R/W	0	reg_force_order_mode_en : // unsigned , RW, default = 0 force order mode enable: 0: no force; 1: forced to force_value

Table 10-3202 AFBCE_DWSCALAR 0x41af

Bit(s)	R/W	Default	Description
7: 6	R/W	3	reg_dwscalar_w0 : // unsigned , RW, default = 3 horizontal 1st step scalar mode: 0: 1:1 no scalar; 1: 2:1 data drop (0,2,4, 6) pixel kept; 2: 2:1 data drop (1, 3, 5,7..) pixels kept; 3: avg
5: 4	R/W	0	reg_dwscalar_w1 : // unsigned , RW, default = 0 horizontal 2nd step scalar mode: 0: 1:1 no scalar; 1: 2:1 data drop (0,2,4, 6) pixel kept; 2: 2:1 data drop (1, 3, 5,7..) pixels kept; 3: avg
3: 2	R/W	2	reg_dwscalar_h0 : // unsigned , RW, default = 2 vertical 1st step scalar mode: 0: 1:1 no scalar; 1: 2:1 data drop (0,2,4, 6) pixel kept; 2: 2:1 data drop (1, 3, 5,7..) pixels kept; 3: avg
1: 0	R/W	3	reg_dwscalar_h1 : // unsigned , RW, default = 3 vertical 2nd step scalar mode: 0: 1:1 no scalar; 1: 2:1 data drop (0,2,4, 6) pixel kept; 2: 2:1 data drop (1, 3, 5,7..) pixels kept; 3: avg

Table 10-3203 AFBCE_DEFCOLOR_1 0x41b0

Bit(s)	R/W	Default	Description
23:12	R/W	4095	reg_enc_defalutcolor_3 : // unsigned , RW, default = 4095 Picture wise default color value in [Y Cb Cr]
11: 0	R/W	4095	reg_enc_defalutcolor_0 : // unsigned , RW, default = 4095 Picture wise default color value in [Y Cb Cr]

Table 10-3204 AFBCE_DEFCOLOR_2 0x41b1

Bit(s)	R/W	Default	Description
23:12	R/W	2048	reg_enc_defalutcolor_2 : // unsigned , RW, default = 2048 wise default color value in [Y Cb Cr]
11: 0	R/W	2048	reg_enc_defalutcolor_1 : // unsigned , RW, default = 2048 wise default color value in [Y Cb Cr]

Amlogic Proprietary and Confidential
Copyright © Amlogic. All rights reserved.

Table 10-3205 AFBCE_QUANT_ENABLE 0x41b2

Bit(s)	R/W	Default	Description
11	R/W	0	reg_quant_expand_en_1 : // unsigned , RW, default = 0 enable for quantization value expansion
10	R/W	0	reg_quant_expand_en_0 : // unsigned , RW, default = 0 enable for quantization value expansion
9: 8	R/W	0	reg_bcleav_ofst : // signed , RW, default = 0 bcleave ofset to get lower range, especially under lossy, for v1/v2, x=0 is equivalent, default = -1;
4	R/W	0	reg_quant_enable_1 : // unsigned , RW, default = 0 enable for quant to get some lossy
0	R/W	0	reg_quant_enable_0 : // unsigned , RW, default = 0 enable for quant to get some lossy

Table 10-3206 AFBCE_IQUANT_LUT_1 0x41b3

Bit(s)	R/W	Default	Description
30:28	R/W	0	reg_iquant_yclut_0_11 : // unsigned , RW, default = 0 quantization lut for mintree leavs, iquant=2^lut(bc_leav_q+1)
26:24	R/W	1	reg_iquant_yclut_0_10 : // unsigned , RW, default = 1 quantization lut for mintree leavs, iquant=2^lut(bc_leav_q+1)
22:20	R/W	2	reg_iquant_yclut_0_9 : // unsigned , RW, default = 2 quantization lut for mintree leavs, iquant=2^lut(bc_leav_q+1)
18:16	R/W	3	reg_iquant_yclut_0_8 : // unsigned , RW, default = 3 quantization lut for mintree leavs, iquant=2^lut(bc_leav_q+1)
14:12	R/W	4	reg_iquant_yclut_0_7 : // unsigned , RW, default = 4 quantization lut for mintree leavs, iquant=2^lut(bc_leav_q+1)
10: 8	R/W	5	reg_iquant_yclut_0_6 : // unsigned , RW, default = 5 quantization lut for mintree leavs, iquant=2^lut(bc_leav_q+1)
6: 4	R/W	5	reg_iquant_yclut_0_5 : // unsigned , RW, default = 5 quantization lut for mintree leavs, iquant=2^lut(bc_leav_q+1)
2: 0	R/W	4	reg_iquant_yclut_0_4 : // unsigned , RW, default = 4 quantization lut for mintree leavs, iquant=2^lut(bc_leav_q+1)

Table 10-3207 AFBCE_IQUANT_LUT_2 0x41b4

Bit(s)	R/W	Default	Description
14:12	R/W	3	reg_iquant_yclut_0_3 : // unsigned , RW, default = 3 quantization lut for mintree leavs, iquant=2^lut(bc_leav_q+1)
10: 8	R/W	2	reg_iquant_yclut_0_2 : // unsigned , RW, default = 2 quantization lut for mintree leavs, iquant=2^lut(bc_leav_q+1)
6: 4	R/W	1	reg_iquant_yclut_0_1 : // unsigned , RW, default = 1 quantization lut for mintree leavs, iquant=2^lut(bc_leav_q+1)
2: 0	R/W	0	reg_iquant_yclut_0_0 : // unsigned , RW, default = 0 quantization lut for mintree leavs, iquant=2^lut(bc_leav_q+1)

Amlogic Proprietary and Confidential
Copyright © Amlogic. All rights reserved.

Table 10-3208 AFBCE_IQUANT_LUT_3 0x41b5

Bit(s)	R/W	Default	Description
30:28	R/W	0	reg_iquant_yclut_1_11 : // unsigned , RW, default = 0 quantization lut for mintree leavs, iquant=2^lut(bc_leav_q+1)
26:24	R/W	1	reg_iquant_yclut_1_10 : // unsigned , RW, default = 1 quantization lut for mintree leavs, iquant=2^lut(bc_leav_q+1)
22:20	R/W	2	reg_iquant_yclut_1_9 : // unsigned , RW, default = 2 quantization lut for mintree leavs, iquant=2^lut(bc_leav_q+1)
18:16	R/W	3	reg_iquant_yclut_1_8 : // unsigned , RW, default = 3 quantization lut for mintree leavs, iquant=2^lut(bc_leav_q+1)
14:12	R/W	4	reg_iquant_yclut_1_7 : // unsigned , RW, default = 4 quantization lut for mintree leavs, iquant=2^lut(bc_leav_q+1)
10: 8	R/W	5	reg_iquant_yclut_1_6 : // unsigned , RW, default = 5 quantization lut for mintree leavs, iquant=2^lut(bc_leav_q+1)
6: 4	R/W	5	reg_iquant_yclut_1_5 : // unsigned , RW, default = 5 quantization lut for mintree leavs, iquant=2^lut(bc_leav_q+1)
2: 0	R/W	4	reg_iquant_yclut_1_4 : // unsigned , RW, default = 4 quantization lut for mintree leavs, iquant=2^lut(bc_leav_q+1)

Table 10-3209 AFBCE_IQUANT_LUT_4 0x41b6

Bit(s)	R/W	Default	Description
14:12	R/W	3	reg_iquant_yclut_1_3 : // unsigned , RW, default = 3 quantization lut for mintree leavs, iquant=2^lut(bc_leav_q+1)
10: 8	R/W	2	reg_iquant_yclut_1_2 : // unsigned , RW, default = 2 quantization lut for mintree leavs, iquant=2^lut(bc_leav_q+1)
6: 4	R/W	1	reg_iquant_yclut_1_1 : // unsigned , RW, default = 1 quantization lut for mintree leavs, iquant=2^lut(bc_leav_q+1)
2: 0	R/W	0	reg_iquant_yclut_1_0 : // unsigned , RW, default = 0 quantization lut for mintree leavs, iquant=2^lut(bc_leav_q+1)

Table 10-3210 AFBCE_RQUANT_LUT_1 0x41b7

Bit(s)	R/W	Default	Description
30:28	R/W	5	reg_rquant_yclut_0_11 : // unsigned , RW, default = 5 quantization lut for bctree leavs, quant=2^lut(bc_leav_r+1), can be calculated from iquant_yclut(fw_setting)
26:24	R/W	5	reg_rquant_yclut_0_10 : // unsigned , RW, default = 5
22:20	R/W	4	reg_rquant_yclut_0_9 : // unsigned , RW, default = 4
18:16	R/W	4	reg_rquant_yclut_0_8 : // unsigned , RW, default = 4
14:12	R/W	3	reg_rquant_yclut_0_7 : // unsigned , RW, default = 3
10: 8	R/W	3	reg_rquant_yclut_0_6 : // unsigned , RW, default = 3
6: 4	R/W	2	reg_rquant_yclut_0_5 : // unsigned , RW, default = 2
2: 0	R/W	2	reg_rquant_yclut_0_4 : // unsigned , RW, default = 2

Amlogic Proprietary and Confidential
Copyright © Amlogic. All rights reserved.

Table 10-3211 AFBCE_RQUANT_LUT_2 0x41b8

Bit(s)	R/W	Default	Description
14:12	R/W	1	reg_rquant_yclut_0_3 : // unsigned , RW, default = 1
10: 8	R/W	1	reg_rquant_yclut_0_2 : // unsigned , RW, default = 1
6: 4	R/W	0	reg_rquant_yclut_0_1 : // unsigned , RW, default = 0
2: 0	R/W	0	reg_rquant_yclut_0_0 : // unsigned , RW, default = 0

Table 10-3212 AFBCE_RQUANT_LUT_3 0x41b9

Bit(s)	R/W	Default	Description
30:28	R/W	5	reg_rquant_yclut_1_11 : // unsigned , RW, default = 5 quantization lut for bctree leavs, quant=2^lut(bc_leav_r+1), can be calculated from iquant_yclut(fw_setting)
26:24	R/W	5	reg_rquant_yclut_1_10 : // unsigned , RW, default = 5
22:20	R/W	4	reg_rquant_yclut_1_9 : // unsigned , RW, default = 4
18:16	R/W	4	reg_rquant_yclut_1_8 : // unsigned , RW, default = 4
14:12	R/W	3	reg_rquant_yclut_1_7 : // unsigned , RW, default = 3
10: 8	R/W	3	reg_rquant_yclut_1_6 : // unsigned , RW, default = 3
6: 4	R/W	2	reg_rquant_yclut_1_5 : // unsigned , RW, default = 2
2: 0	R/W	2	reg_rquant_yclut_1_4 : // unsigned , RW, default = 2

Table 10-3213 AFBCE_RQUANT_LUT_4 0x41ba

Bit(s)	R/W	Default	Description
14:12	R/W	1	reg_rquant_yclut_1_3 : // unsigned , RW, default = 1
10: 8	R/W	1	reg_rquant_yclut_1_2 : // unsigned , RW, default = 1
6: 4	R/W	0	reg_rquant_yclut_1_1 : // unsigned , RW, default = 0
2: 0	R/W	0	reg_rquant_yclut_1_0 : // unsigned , RW, default = 0

Table 10-3214 AFBCE_YUV_FORMAT_CONV_MODE 0x41bb

Bit(s)	R/W	Default	Description
6: 4	R/W	0	reg_444to422_mode : // unsigned , RW, default = 0
2: 0	R/W	0	reg_422to420_mode : // unsigned , RW, default = 0

Table 10-3215 AFBCE_DUMMY_DATA 0x41bc

Bit(s)	R/W	Default	Description
29: 0	R/W	0	reg_dummy_data : // unsigned , default = 0 ,bit[9:0] v bit[19:10] U bit[29:20] Y

Amlogic Proprietary and Confidential
Copyright © Amlogic. All rights reserved.

Table 10-3216 AFBCE_CLR_FLAG 0x41bd

Bit(s)	R/W	Default	Description
1	R/W	0	enc_error_clr : // unsigned, default = 0 ;
0	R/W	0	frm_end_clr : // unsigned, default = 0 ;

Table 10-3217 AFBCE_STA_FLAGT 0x41be

Bit(s)	R/W	Default	Description
31:26	R.O	0	reverse : // unsigned, RO,default = 0 ;
25:24	R.O	0	enc_st 0:idle 1:enc 2:hold 3:wait
23:21	R.O	0	emit_st 0:idle 1:tx_bcrot 2:tx_bc_lev 3:tx_zcd 4:tx_tree 5:tx_uncmp 6:tx_redu 7:tx_check
20:15	R.O	0	ro_cmd2bresp_cnt: // unsigned, RO,default = 0 ;
14:9	R.O	0	ro_enc2body_cnt: // unsigned, RO,default = 0 ;
8:4	R.O	0	ro_cmd2wd_cnt: // unsigned, RO,default = 0 ;
3:2	R.O	0	ro_wr_abort_flag: // unsigned, RO,default = 0 ;
1	R.O	0	ro_enc_error_flag: // unsigned, RO,default = 0 ;
0	R.O	0	ro_frm_end_flag: // unsigned, RO,default = 0 ;

Table 10-3218 AFBCE_MMU_NUM 0x41bf

Bit(s)	R/W	Default	Description
15: 0	R.O	0	ro_frm_mmu_num : // unsigned, RO,default = 0 ,mmu addr have been used in a frame

Table 10-3219 AFBCE_MMU_RMIF_CTRL1 0x41c0

Bit(s)	R/W	Default	Description
25:24	R/W	0	reg_sync_sel : // unsigned , default = 0, axi canvas id sync with frm rst
23:16	R/W	0	reg_canvas_id : // unsigned , default = 0, axi canvas id num
14:12	R/W	1	reg_cmd_intr_len : // unsigned , default = 1, interrupt send cmd when how many series axi cmd, 0 =12 1=16 2=24 3=32 4=40 5=48 6=56 7=64
11:10	R/W	1	reg_cmd_req_size : // unsigned , default = 1, how many room fifo have, then axi send series req, 0=16 1=32 2=24 3=64
9:8	R/W	2	reg_burst_len : // unsigned , default = 2, burst type: 0-single 1-bst2 2-bst4

Amlogic Proprietary and Confidential
Copyright © Amlogic. All rights reserved.

Bit(s)	R/W	Default	Description
7	R/W	0	reg_swap_64bit : // unsigned , default = 0, 64bits of 128bit swap enable
6	R/W	0	reg_little_endian : // unsigned , default = 0, big endian enable
5	R/W	0	reg_y_rev : // unsigned , default = 0, vertical reverse enable
4	R/W	0	reg_x_rev : // unsigned , default = 0, horizontal reverse enable
2:0	R/W	3	reg_pack_mode : // unsigned , default = 3, 0:4bit 1:8bit 2:16bit 3:32bit 4:64bit 5:128bit

Table 10-3220 AFBCE_MMU_RMIF_CTRL2 0x41c1

Bit(s)	R/W	Default	Description
31:30	R/W	0	reg_sw_rst : // unsigned , default = 0,
23:18	R/W	0x0	reg_gclk_ctrl :
16:0	R/W	0	reg_urgent_ctrl : // unsigned , default = 0, urgent control reg : 16 reg_ugt_init : urgent initial value 15 reg_ugt_en : urgent enable 14 reg_ugt_type : 1= wrmif 0= rdmif 7 :4 reg_ugt_top_th: urgent top threshold 3 :0 reg_ugt_bot_th: urgent bottom threshold

Table 10-3221 AFBCE_MMU_RMIF_CTRL3 0x41c2

Bit(s)	R/W	Default	Description
16	R/W	1	reg_acc_mode : // unsigned , default = 1,
12:0	R/W	4096	reg_stride : // unsigned , default = 4096,

Table 10-3222 AFBCE_MMU_RMIF_CTRL4 0x41c3

Bit(s)	R/W	Default	Description
31:0	R/W	0	reg_baddr : // unsigned , default = 0, reg_mmu_baddr

Table 10-3223 AFBCE_MMU_RMIF_SCOPE_X 0x41c4

Bit(s)	R/W	Default	Description
28:16	R/W	4095	reg_x_end : // unsigned , default = 4095, the canvas hor end pixel position
12: 0	R/W	0	reg_x_start : // unsigned , default = 0, the canvas hor start pixel position

Table 10-3224 AFBCE_MMU_RMIF_SCOPE_Y 0x41c5

Bit(s)	R/W	Default	Description
28:16	R/W	0	reg_y_end : // unsigned , default = 0, the canvas ver end pixel position
12: 0	R/W	0	reg_y_start : // unsigned , default = 0, the canvas ver start pixel position

Amlogic Proprietary and Confidential
Copyright © Amlogic. All rights reserved.

Table 10-3225 AFBCE_MMU_RMIF_RO_STAT 0x41c6

Bit(s)	R/W	Default	Description
15:0	R/W	0x0	reg_status : // unsigned , reg_status

10.2.3.49 VPP_PIP_ALPH Registers

Table 10-3226 VD1_PIP_ALPH_CTRL 0x5880

Bit(s)	R/W	Default	Description
28	R/W	0	reg_alph_gen_dbg: //unsigned default =0 ,dbg_mode: output pic with alph_256 to check function
27:12	R/W	0	reg_pic_en: //unsigned default=0, 16bits decide which pics are enabled
11:3	R/W	0	reg_alph0: //unsigned default=0, alph value of those points which are out of windows' ranges
2:1	R/W	0	reg_alph_gen_mode ://unsigned, default = 0, from out of window to border to inside :0:original ,1: alph change as 0/0.5/1 2: alph_change as 0/0.25/0.5/0.75/1
0	R/W	1	reg_alph_gen_byps: // unsigned, default = 1 bypass mode

Table 10-3227 VD1_PIP_ALPH_SCP_H_0 0x5881

Bit(s)	R/W	Default	Description
28:16	R/W	0	reg_scpxn_end_h0: //unsigned default=0, 13bits pic_0 window horizontal end
12:0	R/W	0	reg_scpxn_bgn_h0: //unsigned default=0, 13bits pic_0 window horizontal begin

Table 10-3228 VD1_PIP_ALPH_SCP_H_1 0x5882

Bit(s)	R/W	Default	Description
28:16	R/W	0	reg_scpxn_end_h1: //unsigned default=0, 13bits pic_1 window horizontal end
12:0	R/W	0	reg_scpxn_bgn_h1: //unsigned default=0, 13bits pic_1 window horizontal begin

Table 10-3229 VD1_PIP_ALPH_SCP_H_2 0x5883

Bit(s)	R/W	Default	Description
28:16	R/W	0	reg_scpxn_end_h2: //unsigned default=0, 13bits pic_2 window horizontal end
12:0	R/W	0	reg_scpxn_bgn_h2: //unsigned default=0, 13bits pic_2 window horizontal begin

Table 10-3230 VD1_PIP_ALPH_SCP_H_3 0x5884

Bit(s)	R/W	Default	Description
28:16	R/W	0	reg_scpxn_end_h3: //unsigned default=0, 13bits pic_3 window horizontal end
12:0	R/W	0	reg_scpxn_bgn_h3: //unsigned default=0, 13bits pic_3 window horizontal begin

Amlogic Proprietary and Confidential
Copyright © Amlogic. All rights reserved.

Table 10-3231 VD1_PIP_ALPH_SCP_H_4 0x5885

Bit(s)	R/W	Default	Description
28:16	R/W	0	reg_scpxn_end_h4: //unsigned default=0, 13bits pic_4 window horizontal end
12:0	R/W	0	reg_scpxn_bgn_h4: //unsigned default=0, 13bits pic_4 window horizontal begin

Table 10-3232 VD1_PIP_ALPH_SCP_H_5 0x5886

Bit(s)	R/W	Default	Description
28:16	R/W	0	reg_scpxn_end_h5: //unsigned default=0, 13bits pic_5 window horizontal end
12:0	R/W	0	reg_scpxn_bgn_h5: //unsigned default=0, 13bits pic_5 window horizontal begin

Table 10-3233 VD1_PIP_ALPH_SCP_H_6 0x5887

Bit(s)	R/W	Default	Description
28:16	R/W	0	reg_scpxn_end_h6: //unsigned default=0, 13bits pic_6 window horizontal end
12:0	R/W	0	reg_scpxn_bgn_h6: //unsigned default=0, 13bits pic_6 window horizontal begin

Table 10-3234 VD1_PIP_ALPH_SCP_H_7 0x5888

Bit(s)	R/W	Default	Description
28:16	R/W	0	reg_scpxn_end_h7: //unsigned default=0, 13bits pic_7 window horizontal end
12:0	R/W	0	reg_scpxn_bgn_h7: //unsigned default=0, 13bits pic_7 window horizontal begin

Table 10-3235 VD1_PIP_ALPH_SCP_H_8 0x5889

Bit(s)	R/W	Default	Description
28:16	R/W	0	reg_scpxn_end_h8: //unsigned default=0, 13bits pic_8 window horizontal end
12:0	R/W	0	reg_scpxn_bgn_h8: //unsigned default=0, 13bits pic_8 window horizontal begin

Table 10-3236 VD1_PIP_ALPH_SCP_H_9 0x588a

Bit(s)	R/W	Default	Description
28:16	R/W	0	reg_scpxn_end_h9: //unsigned default=0, 13bits pic_9 window horizontal end
12:0	R/W	0	reg_scpxn_bgn_h9: //unsigned default=0, 13bits pic_9 window horizontal begin

Table 10-3237 VD1_PIP_ALPH_SCP_H_10 0x588b

Bit(s)	R/W	Default	Description
28:16	R/W	0	reg_scpxn_end_h10: //unsigned default=0, 13bits pic_10 window horizontal end
12:0	R/W	0	reg_scpxn_bgn_h10: //unsigned default=0, 13bits pic_10 window horizontal begin

Amlogic Proprietary and Confidential
Copyright © Amlogic. All rights reserved.

Table 10-3238 VD1_PIP_ALPH_SCP_H_11 0x588c

Bit(s)	R/W	Default	Description
28:16	R/W	0	reg_scpxn_end_h11: //unsigned default=0, 13bits pic_11 window horizontal end
12:0	R/W	0	reg_scpxn_bgn_h11: //unsigned default=0, 13bits pic_11 window horizontal begin

Table 10-3239 VD1_PIP_ALPH_SCP_H_12 0x588d

Bit(s)	R/W	Default	Description
28:16	R/W	0	reg_scpxn_end_h12: //unsigned default=0, 13bits pic_12 window horizontal end
12:0	R/W	0	reg_scpxn_bgn_h12: //unsigned default=0, 13bits pic_12 window horizontal begin

Table 10-3240 VD1_PIP_ALPH_SCP_H_13 0x588e

Bit(s)	R/W	Default	Description
28:16	R/W	0	reg_scpxn_end_h13: //unsigned default=0, 13bits pic_13 window horizontal end
12:0	R/W	0	reg_scpxn_bgn_h13: //unsigned default=0, 13bits pic_13 window horizontal begin

Table 10-3241 VD1_PIP_ALPH_SCP_H_14 0x588f

Bit(s)	R/W	Default	Description
28:16	R/W	0	reg_scpxn_end_h14: //unsigned default=0, 13bits pic_14 window horizontal end
12:0	R/W	0	reg_scpxn_bgn_h14: //unsigned default=0, 13bits pic_14 window horizontal begin

Table 10-3242 VD1_PIP_ALPH_SCP_H_15 0x5890

Bit(s)	R/W	Default	Description
28:16	R/W	0	reg_scpxn_end_h15: //unsigned default=0, 13bits pic_15 window horizontal end
12:0	R/W	0	reg_scpxn_bgn_h15: //unsigned default=0, 13bits pic_15 window horizontal begin

Table 10-3243 VD1_PIP_ALPH_SCP_V_0 0x5891

Bit(s)	R/W	Default	Description
28:16	R/W	0	reg_scpxn_end_v0: //unsigned default=0, 13bits pic_0 window vertical end
12:0	R/W	0	reg_scpxn_bgn_v0: //unsigned default=0, 13bits pic_0 window vertical begin

Amlogic Proprietary and Confidential
Copyright © Amlogic. All rights reserved.

Table 10-3244 VD1_PIP_ALPH_SCP_V_1 0x5892

Bit(s)	R/W	Default	Description
28:16	R/W	0	reg_scpxn_end_v1: //unsigned default=0, 13bits pic_1 window vertical end
12:0	R/W	0	reg_scpxn_bgn_v1: //unsigned default=0, 13bits pic_1 window vertical begin

Table 10-3245 VD1_PIP_ALPH_SCP_V_2 0x5893

Bit(s)	R/W	Default	Description
28:16	R/W	0	reg_scpxn_end_v2: //unsigned default=0, 13bits pic_2 window vertical end
12:0	R/W	0	reg_scpxn_bgn_v2: //unsigned default=0, 13bits pic_2 window vertical begin

Table 10-3246 VD1_PIP_ALPH_SCP_V_3 0x5894

Bit(s)	R/W	Default	Description
28:16	R/W	0	reg_scpxn_end_v3: //unsigned default=0, 13bits pic_3 window vertical end
12:0	R/W	0	reg_scpxn_bgn_v3: //unsigned default=0, 13bits pic_3 window vertical begin

Table 10-3247 VD1_PIP_ALPH_SCP_V_4 0x5895

Bit(s)	R/W	Default	Description
28:16	R/W	0	reg_scpxn_end_v4: //unsigned default=0, 13bits pic_4 window vertical end
12:0	R/W	0	reg_scpxn_bgn_v4: //unsigned default=0, 13bits pic_4 window vertical begin

Table 10-3248 VD1_PIP_ALPH_SCP_V_5 0x5896

Bit(s)	R/W	Default	Description
28:16	R/W	0	reg_scpxn_end_v5: //unsigned default=0, 13bits pic_5 window vertical end
12:0	R/W	0	reg_scpxn_bgn_v5: //unsigned default=0, 13bits pic_5 window vertical begin

Table 10-3249 VD1_PIP_ALPH_SCP_V_6 0x5897

Bit(s)	R/W	Default	Description
28:16	R/W	0	reg_scpxn_end_v6: //unsigned default=0, 13bits pic_6 window vertical end
12:0	R/W	0	reg_scpxn_bgn_v6: //unsigned default=0, 13bits pic_6 window vertical begin

Table 10-3250 VD1_PIP_ALPH_SCP_V_7 0x5898

Bit(s)	R/W	Default	Description
28:16	R/W	0	reg_scpxn_end_v7: //unsigned default=0, 13bits pic_7 window vertical end
12:0	R/W	0	reg_scpxn_bgn_v7: //unsigned default=0, 13bits pic_7 window vertical begin

Amlogic Proprietary and Confidential
Copyright © Amlogic. All rights reserved.

Table 10-3251 VD1_PIP_ALPH_SCP_V_8 0x5899

Bit(s)	R/W	Default	Description
28:16	R/W	0	reg_scpxn_end_v8: //unsigned default=0, 13bits pic_8 window vertical end
12:0	R/W	0	reg_scpxn_bgn_v8: //unsigned default=0, 13bits pic_8 window vertical begin

Table 10-3252 VD1_PIP_ALPH_SCP_V_9 0x589a

Bit(s)	R/W	Default	Description
28:16	R/W	0	reg_scpxn_end_v9: //unsigned default=0, 13bits pic_9 window vertical end
12:0	R/W	0	reg_scpxn_bgn_v9: //unsigned default=0, 13bits pic_9 window vertical begin

Table 10-3253 VD1_PIP_ALPH_SCP_V_10 0x589b

Bit(s)	R/W	Default	Description
28:16	R/W	0	reg_scpxn_end_v10: //unsigned default=0, 13bits pic_10 window vertical end
12:0	R/W	0	reg_scpxn_bgn_v10: //unsigned default=0, 13bits pic_10 window vertical begin

Table 10-3254 VD1_PIP_ALPH_SCP_V_11 0x589c

Bit(s)	R/W	Default	Description
28:16	R/W	0	reg_scpxn_end_v11: //unsigned default=0, 13bits pic_11 window vertical end
12:0	R/W	0	reg_scpxn_bgn_v11: //unsigned default=0, 13bits pic_11 window vertical begin

Table 10-3255 VD1_PIP_ALPH_SCP_V_12 0x589d

Bit(s)	R/W	Default	Description
28:16	R/W	0	reg_scpxn_end_v12: //unsigned default=0, 13bits pic_12 window vertical end
12:0	R/W	0	reg_scpxn_bgn_v12: //unsigned default=0, 13bits pic_12 window vertical begin

Table 10-3256 VD1_PIP_ALPH_SCP_V_13 0x589e

Bit(s)	R/W	Default	Description
28:16	R/W	0	reg_scpxn_end_v13: //unsigned default=0, 13bits pic_13 window vertical end
12:0	R/W	0	reg_scpxn_bgn_v13: //unsigned default=0, 13bits pic_13 window vertical begin

Table 10-3257 VD1_PIP_ALPH_SCP_V_14 0x589f

Bit(s)	R/W	Default	Description
28:16	R/W	0	reg_scpxn_end_v14: //unsigned default=0, 13bits pic_14 window vertical end
12:0	R/W	0	reg_scpxn_bgn_v14: //unsigned default=0, 13bits pic_14 window vertical begin

Amlogic Proprietary and Confidential
Copyright © Amlogic. All rights reserved.

Table 10-3258 VD1_PIP_ALPH_SCP_V_15 0x58a0

Bit(s)	R/W	Default	Description
28:16	R/W	0	reg_scpxn_end_v15: //unsigned default=0, 13bits pic_15 window vertical end
12:0	R/W	0	reg_scpxn_bgn_v15: //unsigned default=0, 13bits pic_15 window vertical begin

Table 10-3259 VD2_PIP_ALPH_CTRL 0x58b0

Bit(s)	R/W	Default	Description
28	R/W	0	reg_alph_gen_dbg: //unsigned default =0 ,dbg_mode: output pic with alph_256 to check function
27:12	R/W	0	reg_pic_en: //unsigned default=0, 16bits decide which pics are enabled
11:3	R/W	0	reg_alph0: //unsigned default=0, alph value of those points which are out of windows' ranges
2:1	R/W	0	reg_alph_gen_mode ://unsigned, default = 0, from out of window to border to inside :0:original ,1: alph change as 0/0.5/1 2: alph_change as 0/0.25/0.5/0.75/1
0	R/W	1	reg_alph_gen_byps: // unsigned, default = 1 bypass mode

Table 10-3260 VD2_PIP_ALPH_SCP_H_0 0x58b1

Bit(s)	R/W	Default	Description
28:16	R/W	0	reg_scpxn_end_h0: //unsigned default=0, 13bits pic_0 window horizontal end
12:0	R/W	0	reg_scpxn_bgn_h0: //unsigned default=0, 13bits pic_0 window horizontal begin

Table 10-3261 VD2_PIP_ALPH_SCP_H_1 0x58b2

Bit(s)	R/W	Default	Description
28:16	R/W	0	reg_scpxn_end_h1: //unsigned default=0, 13bits pic_1 window horizontal end
12:0	R/W	0	reg_scpxn_bgn_h1: //unsigned default=0, 13bits pic_1 window horizontal begin

Table 10-3262 VD2_PIP_ALPH_SCP_H_2 0x58b3

Bit(s)	R/W	Default	Description
28:16	R/W	0	reg_scpxn_end_h2: //unsigned default=0, 13bits pic_2 window horizontal end
12:0	R/W	0	reg_scpxn_bgn_h2: //unsigned default=0, 13bits pic_2 window horizontal begin

Table 10-3263 VD2_PIP_ALPH_SCP_H_3 0x58b4

Bit(s)	R/W	Default	Description
28:16	R/W	0	reg_scpxn_end_h3: //unsigned default=0, 13bits pic_3 window horizontal end
12:0	R/W	0	reg_scpxn_bgn_h3: //unsigned default=0, 13bits pic_3 window horizontal begin

Amlogic Proprietary and Confidential
Copyright © Amlogic. All rights reserved.

Table 10-3264 VD2_PIP_ALPH_SCP_H_4 0x58b5

Bit(s)	R/W	Default	Description
28:16	R/W	0	reg_scpxn_end_h4: //unsigned default=0, 13bits pic_4 window horizontal end
12:0	R/W	0	reg_scpxn_bgn_h4: //unsigned default=0, 13bits pic_4 window horizontal begin

Table 10-3265 VD2_PIP_ALPH_SCP_H_5 0x58b6

Bit(s)	R/W	Default	Description
28:16	R/W	0	reg_scpxn_end_h5: //unsigned default=0, 13bits pic_5 window horizontal end
12:0	R/W	0	reg_scpxn_bgn_h5: //unsigned default=0, 13bits pic_5 window horizontal begin

Table 10-3266 VD2_PIP_ALPH_SCP_H_6 0x58b7

Bit(s)	R/W	Default	Description
28:16	R/W	0	reg_scpxn_end_h6: //unsigned default=0, 13bits pic_6 window horizontal end
12:0	R/W	0	reg_scpxn_bgn_h6: //unsigned default=0, 13bits pic_6 window horizontal begin

Table 10-3267 VD2_PIP_ALPH_SCP_H_7 0x58b8

Bit(s)	R/W	Default	Description
28:16	R/W	0	reg_scpxn_end_h7: //unsigned default=0, 13bits pic_7 window horizontal end
12:0	R/W	0	reg_scpxn_bgn_h7: //unsigned default=0, 13bits pic_7 window horizontal begin

Table 10-3268 VD2_PIP_ALPH_SCP_H_8 0x58b9

Bit(s)	R/W	Default	Description
28:16	R/W	0	reg_scpxn_end_h8: //unsigned default=0, 13bits pic_8 window horizontal end
12:0	R/W	0	reg_scpxn_bgn_h8: //unsigned default=0, 13bits pic_8 window horizontal begin

Table 10-3269 VD2_PIP_ALPH_SCP_H_9 0x58ba

Bit(s)	R/W	Default	Description
28:16	R/W	0	reg_scpxn_end_h9: //unsigned default=0, 13bits pic_9 window horizontal end
12:0	R/W	0	reg_scpxn_bgn_h9: //unsigned default=0, 13bits pic_9 window horizontal begin

Table 10-3270 VD2_PIP_ALPH_SCP_H_10 0x58bb

Bit(s)	R/W	Default	Description
28:16	R/W	0	reg_scpxn_end_h10: //unsigned default=0, 13bits pic_10 window horizontal end
12:0	R/W	0	reg_scpxn_bgn_h10: //unsigned default=0, 13bits pic_10 window horizontal begin

Amlogic Proprietary and Confidential
Copyright © Amlogic. All rights reserved.

Table 10-3271 VD2_PIP_ALPH_SCP_H_11 0x58bc

Bit(s)	R/W	Default	Description
28:16	R/W	0	reg_scpxn_end_h11: //unsigned default=0, 13bits pic_11 window horizontal end
12:0	R/W	0	reg_scpxn_bgn_h11: //unsigned default=0, 13bits pic_11 window horizontal begin

Table 10-3272 VD2_PIP_ALPH_SCP_H_12 0x58bd

Bit(s)	R/W	Default	Description
28:16	R/W	0	reg_scpxn_end_h12: //unsigned default=0, 13bits pic_12 window horizontal end
12:0	R/W	0	reg_scpxn_bgn_h12: //unsigned default=0, 13bits pic_12 window horizontal begin

Table 10-3273 VD2_PIP_ALPH_SCP_H_13 0x58be

Bit(s)	R/W	Default	Description
28:16	R/W	0	reg_scpxn_end_h13: //unsigned default=0, 13bits pic_13 window horizontal end
12:0	R/W	0	reg_scpxn_bgn_h13: //unsigned default=0, 13bits pic_13 window horizontal begin

Table 10-3274 VD2_PIP_ALPH_SCP_H_14 0x58bf

Bit(s)	R/W	Default	Description
28:16	R/W	0	reg_scpxn_end_h14: //unsigned default=0, 13bits pic_14 window horizontal end
12:0	R/W	0	reg_scpxn_bgn_h14: //unsigned default=0, 13bits pic_14 window horizontal begin

Table 10-3275 VD2_PIP_ALPH_SCP_H_15 0x58c0

Bit(s)	R/W	Default	Description
28:16	R/W	0	reg_scpxn_end_h15: //unsigned default=0, 13bits pic_15 window horizontal end
12:0	R/W	0	reg_scpxn_bgn_h15: //unsigned default=0, 13bits pic_15 window horizontal begin

Table 10-3276 VD2_PIP_ALPH_SCP_V_0 0x58c1

Bit(s)	R/W	Default	Description
28:16	R/W	0	reg_scpxn_end_v0: //unsigned default=0, 13bits pic_0 window vertical end
12:0	R/W	0	reg_scpxn_bgn_v0: //unsigned default=0, 13bits pic_0 window vertical begin

Amlogic Proprietary and Confidential
Copyright © Amlogic. All rights reserved.

Table 10-3277 VD2_PIP_ALPH_SCP_V_1 0x58c2

Bit(s)	R/W	Default	Description
28:16	R/W	0	reg_scpxn_end_v1: //unsigned default=0, 13bits pic_1 window vertical end
12:0	R/W	0	reg_scpxn_bgn_v1: //unsigned default=0, 13bits pic_1 window vertical begin

Table 10-3278 VD2_PIP_ALPH_SCP_V_2 0x58c3

Bit(s)	R/W	Default	Description
28:16	R/W	0	reg_scpxn_end_v2: //unsigned default=0, 13bits pic_2 window vertical end
12:0	R/W	0	reg_scpxn_bgn_v2: //unsigned default=0, 13bits pic_2 window vertical begin

Table 10-3279 VD2_PIP_ALPH_SCP_V_3 0x58c4

Bit(s)	R/W	Default	Description
28:16	R/W	0	reg_scpxn_end_v3: //unsigned default=0, 13bits pic_3 window vertical end
12:0	R/W	0	reg_scpxn_bgn_v3: //unsigned default=0, 13bits pic_3 window vertical begin

Table 10-3280 VD2_PIP_ALPH_SCP_V_4 0x58c5

Bit(s)	R/W	Default	Description
28:16	R/W	0	reg_scpxn_end_v4: //unsigned default=0, 13bits pic_4 window vertical end
12:0	R/W	0	reg_scpxn_bgn_v4: //unsigned default=0, 13bits pic_4 window vertical begin

Table 10-3281 VD2_PIP_ALPH_SCP_V_5 0x58c6

Bit(s)	R/W	Default	Description
28:16	R/W	0	reg_scpxn_end_v5: //unsigned default=0, 13bits pic_5 window vertical end
12:0	R/W	0	reg_scpxn_bgn_v5: //unsigned default=0, 13bits pic_5 window vertical begin

Table 10-3282 VD2_PIP_ALPH_SCP_V_6 0x58c7

Bit(s)	R/W	Default	Description
28:16	R/W	0	reg_scpxn_end_v6: //unsigned default=0, 13bits pic_6 window vertical end
12:0	R/W	0	reg_scpxn_bgn_v6: //unsigned default=0, 13bits pic_6 window vertical begin

Table 10-3283 VD2_PIP_ALPH_SCP_V_7 0x58c8

Bit(s)	R/W	Default	Description
28:16	R/W	0	reg_scpxn_end_v7: //unsigned default=0, 13bits pic_7 window vertical end
12:0	R/W	0	reg_scpxn_bgn_v7: //unsigned default=0, 13bits pic_7 window vertical begin

Amlogic Proprietary and Confidential
Copyright © Amlogic. All rights reserved.

Table 10-3284 VD2_PIP_ALPH_SCP_V_8 0x58c9

Bit(s)	R/W	Default	Description
28:16	R/W	0	reg_scpxn_end_v8: //unsigned default=0, 13bits pic_8 window vertical end
12:0	R/W	0	reg_scpxn_bgn_v8: //unsigned default=0, 13bits pic_8 window vertical begin

Table 10-3285 VD2_PIP_ALPH_SCP_V_9 0x58ca

Bit(s)	R/W	Default	Description
28:16	R/W	0	reg_scpxn_end_v9: //unsigned default=0, 13bits pic_9 window vertical end
12:0	R/W	0	reg_scpxn_bgn_v9: //unsigned default=0, 13bits pic_9 window vertical begin

Table 10-3286 VD2_PIP_ALPH_SCP_V_10 0x58cb

Bit(s)	R/W	Default	Description
28:16	R/W	0	reg_scpxn_end_v10: //unsigned default=0, 13bits pic_10 window vertical end
12:0	R/W	0	reg_scpxn_bgn_v10: //unsigned default=0, 13bits pic_10 window vertical begin

Table 10-3287 VD2_PIP_ALPH_SCP_V_11 0x58cc

Bit(s)	R/W	Default	Description
28:16	R/W	0	reg_scpxn_end_v11: //unsigned default=0, 13bits pic_11 window vertical end
12:0	R/W	0	reg_scpxn_bgn_v11: //unsigned default=0, 13bits pic_11 window vertical begin

Table 10-3288 VD2_PIP_ALPH_SCP_V_12 0x58cd

Bit(s)	R/W	Default	Description
28:16	R/W	0	reg_scpxn_end_v12: //unsigned default=0, 13bits pic_12 window vertical end
12:0	R/W	0	reg_scpxn_bgn_v12: //unsigned default=0, 13bits pic_12 window vertical begin

Table 10-3289 VD2_PIP_ALPH_SCP_V_13 0x58ce

Bit(s)	R/W	Default	Description
28:16	R/W	0	reg_scpxn_end_v13: //unsigned default=0, 13bits pic_13 window vertical end
12:0	R/W	0	reg_scpxn_bgn_v13: //unsigned default=0, 13bits pic_13 window vertical begin

Table 10-3290 VD2_PIP_ALPH_SCP_V_14 0x58cf

Bit(s)	R/W	Default	Description
28:16	R/W	0	reg_scpxn_end_v14: //unsigned default=0, 13bits pic_14 window vertical end
12:0	R/W	0	reg_scpxn_bgn_v14: //unsigned default=0, 13bits pic_14 window vertical begin

Amlogic Proprietary and Confidential
Copyright © Amlogic. All rights reserved.

Table 10-3291 VD2_PIP_ALPH_SCP_V_15 0x58d0

Bit(s)	R/W	Default	Description
28:16	R/W	0	reg_scpxn_end_v15: //unsigned default=0, 13bits pic_15 window vertical end
12:0	R/W	0	reg_scpxn_bgn_v15: //unsigned default=0, 13bits pic_15 window vertical begin

10.2.3.50 HDMITX Registers

10.2.3.50.1 Register Access

Accessing HDMITX Top-Level registers is by directly accessing memory addresses. The top-level registers are 4-byte wide, below list the correct ways to access Top-level registers.

Top-level Registers Access

```
#define HDMITX_TOP_OFFSET0xfe300000

void hdmitx_wr_only_TOP (uint8_t int_ext, uint32_t addr, uint32_t data)
{
    *(volatile uint32_t *)( HDMITX_TOP_OFFSET +addr) = (data);
} /* hdmitx_wr_only_TOP */

uint32_t hdmitx_rd_TOP (uint8_t int_ext, uint32_t addr)
{
    uint32_t    data;
    data = *(volatile uint32_t *)( HDMITX_TOP_OFFSET +addr);
    return (data);
} /* hdmitx_rd_TOP */
```

10.2.3.50.2 Top-Level Register Description

Register Address

For below registers the base address is 0xfe380000.

Each register final address = BASE + address * 4.

The following lists describe the mapping between each register and its address.

Address	Register	RW	Function
0x000<<2	HDMITX_TOP_SW_RESET	RW	Software reset sub-modules.
0x001<<2	HDMITX_TOP_CLK_CNTL	RW	Clock gating and inversion.
0x002<<2	HDMITX_TOP_HPD_FILTER	RW	HPD and RxSense input glitch filter.
0x003<<2	HDMITX_TOP_INTR_ MASKN	RW	Interrupt mask.
0x004<<2	HDMITX_TOP_INTR_STAT	RW	Interrupt status.
0x005<<2	HDMITX_TOP_INTR_STAT_ CLR	W	Interrupt clear.
0x006<<2	HDMITX_TOP_BIST_CNTL	RW	Build-In Self Test(BIST) control.
0x007<<2	HDMITX_TOP_SHIFT_ PTTN_012	RW	Shift pattern for BIST.
0x008<<2	HDMITX_TOP_SHIFT_ PTTN_345	RW	Shift pattern for BIST.

Amlogic Proprietary and Confidential
Copyright © Amlogic. All rights reserved.

Address	Register	RW	Function
0x009<<2	HDMITX_TOP_SHIFT_ PTTN_67	RW	Shift pattern for BIST.
0x00A<<2	HDMITX_TOP_TMDS_CLK_ PTTN_01	RW	TMDS clock pattern for generating /10 or /40 rate clock.
0x00B<<2	HDMITX_TOP_TMDS_CLK_ PTTN_23	RW	TMDS clock pattern for generating /10 or /40 rate clock.
0x00C<<2	HDMITX_TOP_TMDS_CLK_ PTTN_CNTL	RW	TMDS clock pattern for generating /10 or /40 rate clock.
0x00E<<2	HDMITX_TOP_STAT0	RW	Status.
0x01D<<2	HDMITX_TOP_INFILTER	RW	DDC input glitch filter control.
0x01E<<2	HDMITX_TOP_NSEC_ SCRATCH	RW	Scratch register for non-secure access.
0x01F<<2	HDMITX_TOP_SEC_ SCRATCH	RW	Scratch register for secure access.
0x021<<2	HDMITX_TOP_HS_INTR_ CNTL	RW	HS_INTR pulse control
0x022<<2	HDMITX_TOP_AUD_ID	RW	Audio input ID
0x023<<2	HDMITX_TOP_HV_ACTIVE	RW	Video size for secure video
0x028<<2	HDMITX_TOP_I2C_BUSY_ CNT_MAX	RW	Max I2C idle time after I2C Start.
0x029<<2	HDMITX_TOP_I2C_BUSY_ CNT_STAT	RW	I2C idle time status.
0x02B<<2	HDMITX_TOP_DDC_CNTL	RW	DDC pull down by SW.
0x02C<<2	HDMITX_TOP_FIX_DIS-ABLE_0	RW	Disable IP internal sync crossing bug fix.
0x02D<<2	HDMITX_TOP_FIX_DIS-ABLE_1	RW	Disable IP internal sync crossing bug fix.
0x033<<2	HDMITX_TOP_SEC_VID-EO_OVR	RW	Secure video protect.
0x034<<2	HDMITX_TOP_HDCP14_ MIN_SIZE	RW	Secure video protect.
0x035<<2	HDMITX_TOP_HDCP22_ MIN_SIZE	RW	Secure video protect.
0x040<<2	HDMITX_TOP_SECURE_ INDEX	RW	Secure core register bank start index.
0x041<<2	HDMITX_TOP_SECURE_ DATA	RW	Secure core register bank content.

Register Description

Table 10-3292 HDMITX_TOP_SW_RESET

Bit	R/W	Default	Description
31:8	R	0	Reserved
15:7	RW	0x1ff	Reserved

Amlogic Proprietary and Confidential
Copyright © Amlogic. All rights reserved.

Bit	R/W	Default	Description
6	RW	1	sw_reset_flt: to reset DDC&CEC input glitch filter. 0=Release from reset; 1=Apply reset.
4	RW	1	sw_reset_phyif: to reset PHY interface. 0=Release from reset; 1=Apply reset.
3	RW	1	sw_reset_intr: to reset interrupt block. 0=Release from reset; 1=Apply reset.
0	RW	1	sw_reset_core: To reset TX Controller IP. 0=Release from reset; 1=Apply reset.

Table 10-3293 HDMITX_TOP_CLK_CNTL

Bit	R/W	Default	Description
31	RW	0	free_clk_en: 0= Enable clock gating for power saving; 1= Disable clock gating, enable free-run clock.
30:14	RW	0	Reserved
13	RW	0	aud_mclk_sel: Select to use which clock for ACR measurement. 0= Use i2s_mclk; 1=Use spdif_clk.
12	RW	0	i2s_ws_inv: 1= Invert i2s_ws.
11	RW	0	i2s_clk_inv: 1= Invert i2s_clk.
9	RW	0	tmds_clk_inv: 1= Invert tmds_clk.
8	RW	0	pixel_clk_inv: 1= Invert pixel_clk.
4	RW	0	Reserved.
3	RW	0	i2s_clk_en: 1= Enable i2s_clk.
1	RW	0	tmds_clk_en: 1= Enable tmds_clk.
0	RW	0	pixel_clk_en: 1= Enable pixel_clk.

Table 10-3294 HDMITX_TOP_HPD_FILTER

Bit	R/W	Default	Description
31:16	R	0	Reserved
31:28	RW	0	rxsense_glitch_width: Filter out glitch <= rxsense_glitch_width.
27:16	RW	0	rxsense_valid_width: Filter out width <= rxsense_valid_width * 1024.

Amlogic Proprietary and Confidential
Copyright © Amlogic. All rights reserved.

Bit	R/W	Default	Description
15:12	RW	0	hpd_glitch_width: Filter out glitch <= hpd_glitch_width.
11:0	RW	0	hpd_valid_width: Filter out width <= hpd_valid_width * 1024.

Table 10-3295 HDMITX_TOP_INTR_MASKN

Interrupt MASKN, one bit per interrupt source.

0= Disable interrupt source;

1= Enable interrupt source.

Bit	R/W	Default	Description
31:9	R	0	Reserved
8	RW	0	hdcp_topology_err
7	RW	0	rxsense_fall
6	RW	0	rxsense_rise
5	RW	0	err_i2c_timeout
4	RW	0	HS_intr
3	RW	0	TX Controller aon_intr interrupt
2	RW	0	hpd_fall
1	RW	0	hpd_rise
0	RW	0	TX Controller pwd_intr interrupt.

Table 10-3296 HDMITX_TOP_INTR_STAT

Interrupt status. For each bit of bit[8:0], write 1 to manually set the interrupt bit, read back the interrupt status.

Bit	R/W	Default	Description
31	R	0	Shadowing TX Controller pwd_intr status flag.
30	R	0	Shadowing TX Controller aon_intr status flag.
29:9	R	0	Reserved
8	RW	0	hdcp_topology_err
7	RW	0	rxsense_fall
6	RW	0	rxsense_rise
5	RW	0	err_i2c_timeout
4	RW	0	HS_intr
3	RW	0	TX Controller aon_intr interrupt
2	RW	0	hpd_fall

Amlogic Proprietary and Confidential
Copyright © Amlogic. All rights reserved.

Bit	R/W	Default	Description
1	RW	0	hpd_rise
0	RW	0	TX Controller pwd_intr interrupt.

Table 10-3297 HDMITX_TOP_INTR_STAT_CLR

Interrupt status clear. For each bit, write 1 to clear the interrupt bit.

Bit	R/W	Default	Description
31:9	R	0	Reserved
8	W	0	hdcp_topology_err
7	W	0	rxsense_fall
6	W	0	rxsense_rise
5	W	0	err_i2c_timeout
4	W	0	HS_intr
3	W	0	TX Controller aon_intr interrupt
2	W	0	hpd_fall
1	W	0	hpd_rise
0	W	0	TX Controller pwd_intr interrupt.

Table 10-3298 HDMITX_TOP_BIST_CNTL

Bit	R/W	Default	Description
31:16	R	0	Reserved
15	RW	0	Reserved
14:12	RW	0	tmds_sel: 3'b000=Output zero; 3'b001=Output normal TMDS data; 3'b010=Output PRBS data; 3'b100=Output shift pattern.
11: 9	RW	0	shift_pttn_repeat: 0=New pattern every clk cycle; 1=New pattern every 2 clk cycles; ...; 7=New pattern every 8 clk cycles.
8	RW	0	shift_pttn_en: 1= Eanble shift pattern generator; 0=Disable.
7:5	RW	0	Reserved
4: 3	RW	0	prbs_pttn_mode: 0=PRBS11; 1=PRBS15; 2=PRBS7; 3=PRBS31.

Amlogic Proprietary and Confidential
Copyright © Amlogic. All rights reserved.

Bit	R/W	Default	Description
2:1	RW	0	prbs_pttn_width: 0=Idle; 1=Output 8-bit pattern; 2=Output 1-bit pattern; 3=Output 10-bit pattern.
0	RW	0	prbs_pttn_en: 1=Enable PRBS generator; 0=Disable.

Table 10-3299 HDMITX_TOP_SHIFT_PTTN_012

Bit	R/W	Default	Description
31:30	R	0	Reserved
29:20	RW	0	shift_pttn_data[59:50].
19:10	RW	0	shift_pttn_data[69:60].
9:0	RW	0	shift_pttn_data[79:70].

Table 10-3300 HDMITX_TOP_SHIFT_PTTN_345

Bit	R/W	Default	Description
31:30	R	0	Reserved
29:20	RW	0	shift_pttn_data[29:20].
19:10	RW	0	shift_pttn_data[39:30].
9:0	RW	0	shift_pttn_data[49:40].

Table 10-3301 HDMITX_TOP_SHIFT_PTTN_67

Bit	R/W	Default	Description
31:20	R	0	Reserved
19:10	RW	0	shift_pttn_data[9:0].
9:0	RW	0	shift_pttn_data[19:10].

Table 10-3302 HDMITX_TOP_TMDS_CLK_PTTN_01

Bit	R/W	Default	Description
31:26	R	0	Reserved
25:16	RW	0	tmds_clk_pttn[19:10].
15:10	R	0	Reserved
9:0	RW	0	tmds_clk_pttn[9:0].

Amlogic Proprietary and Confidential
Copyright © Amlogic. All rights reserved.

Table 10-3303 HDMITX_TOP_TMDS_CLK_PTTN_23

Bit	R/W	Default	Description
31:26	R	0	Reserved
25:16	RW	0	tmds_clk_pttn[39:30].
15:10	R	0	Reserved
9:0	RW	0	tmds_clk_pttn[29:20].

Table 10-3304 HDMITX_TOP_TMDS_CLK_PTTN_CNTL

Bit	R/W	Default	Description
31:2	R	0	Reserved
1	RW	0	shift_tmds_clk_pttn: 1=Enable shifting clk pattern, used when TMDS CLK rate = TMDS character rate /4.
0	W	0	load_tmds_clk_pttn: Write this bit to 1 to load tmds_clk_pttn to HW. Always read back 0.

Table 10-3305 HDMITX_TOP_STAT0

Bit	R/W	Default	Description
31:2	R	0	Reserved
1	R	0	filtered RxSense status: 0= RxSense low; 1= RxSense high.
0	R	0	filtered HPD status: 0= HPD low; 1= HPD high.

Table 10-3306 HDMITX_TOP_INFILTER

Bit	R/W	Default	Description
31:27	RW	0	Reserved
26:24	RW	0	For DDC infilter: filter internal clock divider. 0=No divide; 1=Divide by 2; 2=Divide by 3; … 7=Divide by 8.
23:16	RW	0	For DDC infilter: sampling clock divider. 0=No divide; 1=Divide the filter sampling clock by 2; 2=Divide the filter sampling clock by 3; … 255=Divide the filter sampling clock by 256;
15:0	RW	0	Reserved

Amlogic Proprietary and Confidential
Copyright © Amlogic. All rights reserved.

Table 10-3307 HDMITX_TOP_NSEC_SCRATCH

Bit	R/W	Default	Description
31:0	RW	0	Scratch register that can be used for either secure or non-secure reg access.

Table 10-3308 HDMITX_TOP_SEC_SCRATCH

Bit	R/W	Default	Description
31:1	RW	0	Scratch register that can be used for secure reg access only.
1	RW	0	cor_reg_access_en: 0=Cannot access Controller core registers; 1=Enable access Controller core register.

Table 10-3309 HDMITX_TOP_HS_INTR_CNTL

Bit	R/W	Default	Description
17	RW	0	HS_polarity. 0=Use HS rise edge as HS pulse; 1=Use HS fall edge as HS pulse.
16	RW	0	VS_polarity. 0=Use VS rise edge as VS pulse; 1=Use VS fall edge as VS pulse.
15:0	RW	0	HS_latency: assert an HS_INTR after seeing VS pulse, and after seeing HS_latency number of HS pulses.

Table 10-3310 HDMITX_TOP_AUD_ID

Bit	R/W	Default	Description
4:0	RW	0	Indicate to core of which audio source is being selected. 5'b00001 = SPDIF; 5'b00010 = I2S; 5'b01000 = HBR audio.

Table 10-3311 HDMITX_TOP_HV_ACTIVE

Bit	R/W	Default	Description
30:16	RW	0	Vactive: active video height..
14:0	RW	0	Hactive: active video width.

Table 10-3312 HDMITX_TOP_I2C_BUSY_CNT_MAX

Bit	R/W	Default	Description
31:0	RW	0xffffffff	i2c_busy_cnt_max. After I2C Start bit, if I2C bus is static for more than i2c_busy_cnt_max number of cycles, an error interrupt will happen.

Amlogic Proprietary and Confidential
Copyright © Amlogic. All rights reserved.

Table 10-3313 HDMITX_TOP_I2C_BUSY_CNT_STAT

Bit	R/W	Default	Description
31:0	R	0	i2c_busy_cnt. Reflect the number of idle cycles after the I2C Start bit, for the latest I2C transaction.

Table 10-3314 HDMITX_TOP_DDC_CNTL

Bit	R/W	Default	Description
31:2	R	0	Reserved.
1	RW	1	DSDA pull down. 0=Pull down DSDA. 1=No pull down.
0	RW	1	DSCL pull down. 0=Pull down DSCL. 1=No pull down.

Table 10-3315 HDMITX_TOP_FIX_DISABLE_0

Bit	R/W	Default	Description
31:0	RW	0	fix_disable[31:0]. Each bit to control whether to fix a internal time crossing bug. 0=Enable fix; 1=Go back to original behavior.

Table 10-3316 HDMITX_TOP_FIX_DISABLE_1

Bit	R/W	Default	Description
31:0	RW	0	fix_disable[63:32]. Each bit to control whether to fix a internal time crossing bug. 0=Enable fix; 1=Go back to original behavior.

Table 10-3317 HDMITX_TOP_SEC_VIDEO_OVR

There is a HW bit from VPU to indicate if the video content need secure protection, at the input of HDMITX.

When this bit=1, HDMITX_TOP_SEC_VIDEO_OVR, HDMITX_TOP_HDCP14_MIN_SIZE, HDMITX_TOP_HDCP22_MIN_SIZE will be used.

When this bit=0, then these three registers are don’t care.

When this bit=1, the rule for HW to judge if the override secure video with HDMITX_TOP_SEC_VIDEO_OVR is as follows:

If the video size < HDMITX_TOP_HDCP14_MIN_SIZE, then no need override, regardless of authentication status.

If the video size >= HDMITX_TOP_HDCP14_MIN_SIZE,

but < HDMITX_TOP_HDCP22_MIN_SIZE, then override until HDCP1.4 or HDCP2.2 is authenticated.

If the video size >= HDMITX_TOP_HDCP22_MIN_SIZE, then override until HDCP2.2 is authenticated.

Amlogic Proprietary and Confidential
Copyright © Amlogic. All rights reserved.

Bit	R/W	Default	Description
29:20	RW	0	Video data for tmds channel 2, when override.
19:10	RW	0	Video data for tmds channel 1, when override.
9:0	RW	0	Video data for tmds channel 0, when override.

Table 10-3318 HDMITX_TOP_HDCP14_MIN_SIZE

Bit	R/W	Default	Description
31	RW	0	hdcp14_min_size_v_en
30:16	RW	0	hdcp14_min_size_v[14:0]
15	RW	0	hdcp14_min_size_h_en
14:0	RW	0	hdcp14_min_size_h[14:0]

Table 10-3319 HDMITX_TOP_HDCP22_MIN_SIZE

Bit	R/W	Default	Description
31	RW	0	hdcp22_min_size_v_en
30:16	RW	0	hdcp22_min_size_v[14:0]
15	RW	0	hdcp22_min_size_h_en
14:0	RW	0	hdcp22_min_size_h[14:0]

Table 10-3320 HDMITX_TOP_SECURE_INDEX

Bit	R/W	Default	Description
15:0	RW	0	Start pointer of the 32-deep secure core register table

Table 10-3321 HDMITX_TOP_SECURE_DATA

Bit	R/W	Default	Description
15:0	RW	0	The core register address value to be programmed into the 32-deep table.

10.2.3.50.3 VPU_HDMI_IF Module

Function

VPU_HDMI_IF is a sub-module inside the VPU. It takes video data from either ENCI or ENCP, performs functions such as video component remapping, 444 to 422 or 420 conversion and dither. Below is the block diagram of the module.

Amlogic Proprietary and Confidential
Copyright © Amlogic. All rights reserved.

Figure 10-5 VPU_HDMI_IF Function

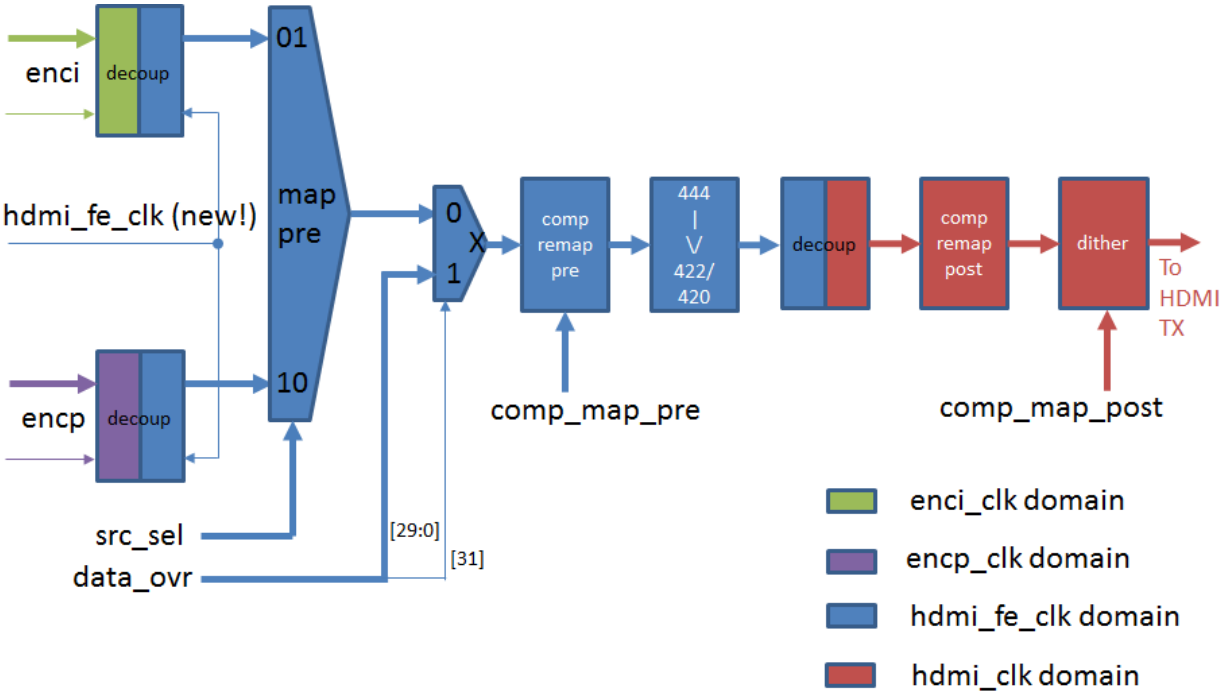

Register Description

Table 10-3322 vpu_hdmi_setting

Bit	R/W	Default	Description
27:24	RW	0	rd_data_post (New): Read rate to the async FIFO between HDMI_FE_CLK domain and HDMI_CLK domain. 0=One read every hdmi_clk; 1=One read every 2 hdmi_clk; 2=One read every 3 hdmi_clk; … 15=One read every 16 hdmi_clk.
23:20	RW	0	wr_data_post (New): Write rate to the async FIFO between HDMI_FE_CLK domain and HDMI_CLK domain. 0=One write every hdmi_fe_clk; 1=One write every 2 hdmi_fe_clk; 2=One write every 3 hdmi_fe_clk; … 15=One write every 16 hdmi_fe_clk.
18:16	RW	0	comp_map_pre (New): In case the input data is not CrYCb, map the data to CrYCb format, before 444->422/420 conversion. E.g, if input data format is {2, 1, 0} 0=Output {2, 1, 0}; 1=Output {1, 0, 2}; 2=Output {1, 2, 0}; 3=Output {0, 2, 1}; 4=Output {0, 1, 2}; 5=Output {2, 0, 1}; 6,7=Reserved.
15:12	RW	0	rd_data_pre (Original): Read rate to the async FIFO between VENC and HDMI_FE_CLK domain. 0=One read every hdmi_fe_clk;

Amlogic Proprietary and Confidential
Copyright © Amlogic. All rights reserved.

Bit	R/W	Default	Description
			1=One read every 2 hdmi_fe_clk; 2=One read every 3 hdmi_fe_clk; … 15=One read every 16 hdmi_fe_clk.
11:8	RW	0	wr_data_pre (Original): Write rate to the async FIFO between VENC and HDMI_FE_CLK domain. 0=One write every enc_clk; 1=One write every 2 enc_clk; 2=One write every 3 enc_clk; … 15=One write every 16 enc_clk.
7:5	RW	0	comp_map_post (Original): Input data is CrYCb(BRG), map the output data to desired format. 0=Output {Cr, Y, Cb} or {B, R, G}; 1=Output {Y, Cb, Cr} or {R, G, B}; 2=Output {Y, Cr, Cb} or {R, B, G}; 3=Output {Cb, Cr, Y} or {G, B, R}; 4=Output {Cb, Y, Cr} or {G, R, B}; 5=Output {Cr, Cb, Y} or {B, G, R}; 6,7=Reserved.
4	RW	0	inv_dvi_clk. If true, invert the polarity of clock output to external DVI interface. (NOT internal HDMI).
3	RW	0	inv_vsync: If true, invert the polarity of VSync input from VENC.
2	RW	0	inv_hsync: If true, invert the polarity of HSync input from VENC.
1:0	RW	0	src_sel: Select which HDMI source from between ENCI and ENCP. 2'b00: Disable HDMI source; 2'b01: Select ENCI data to HDMI; 2'b10: Select ENCP data to HDMI; 2'b11: Not allowed.

Table 10-3323 vpu_hdmi_data_ovr

Bit	R/W	Default	Description
31	RW	0	data_ovr_en: Control if override HDMI input data with data_ovr[29:0], for display e.g. black or blue screen. 0: No override; 1: Enable override.
29:20	RW	0	data_ovr[29:20]: Programmable pixel data value for override.
19:10	RW	0	data_ovr[19:10]: Programmable pixel data value for override.
9:0	RW	0	data_ovr[9:0]: Programmable pixel data value for override.

Table 10-3324 vpu_hdmi_fmt_ctrl

Bit	R/W	Default	Description
27:24	RW	0	pix_repeat. Need to program to be the same as HDMI IP internal pixel repeat rate. 0 = No repeat; 1 = Repeat once; ….
23:22	RW	0	chroma_dnsmp_v: Vertical chroma down sample mode when convert to 422 or 420. 0 = use line 0; 1 = use line 1;

Amlogic Proprietary and Confidential
Copyright © Amlogic. All rights reserved.

Bit	R/W	Default	Description
			2 = use average.
21:19	RW	0	Frame count offset for B.
18:16	RW	0	Frame count offset for G.
15	RW	0	hcnt hold when de valid.
14	RW	0	RGB frame count separate.
13	RW	0	dith4x4: frame random enable
12	RW	0	dith4x4 enable
11	RW	0	tunnel_en: tunnel enable for DOLBY.
10	RW	0	hdmi_round_en
9:6	RW	0	hdmi_dith10
5	RW	0	hdmi_dith_md
4	RW	0	hdmi_dith_en
3:2	RW	0	chroma_dnsmp_h: Horizontal chroma down sample mode when convert to 422 or 420. 0 = use pixel 0; 1 = use pixel 1; 2 = use average.
1:0	RW	0	hdmi_vide_fmt: Control whether to convert ENC's 444 data to 422 or 420. 0 = No conversion; 1 = Convert to 422; 2 = Convert to 420.

10.2.3.50.4 Operating Procedures

This section describes the procedure of protecting a selection of core registers to be secure mode access only.

- After reset, none of the IP registers are accessible, regardless secure mode or not.
- Via secure mode, program HDMITX_TOP_SECURE_INDEX to an appropriate value, e.g. = 0
- Repetitively use secure write to HDMITX_TOP_SECURE_DATA with the list of IP register addresses that you'd like to set to be secure-access only. Only up to 32 IP registers can be selected.

Amlogic Proprietary and Confidential
Copyright © Amlogic. All rights reserved.

11 Audio Path

The SoC integrates 3 input/ 3 output TDM interface, 2 SPDIF output interface, 5 TODDR (FIFO) for transfering input data to DDR, 5 FRDDR (FIFO) for transfering data from DDR to output, 1 TDM LB and 1 Loopback for AEC, 1 HW resample for clock synchronization, 1 HW resample for AEC, 1 VAD voice wake up, and 2 clock locker detect difference of two clock. Below is the diagram for audio path.

Figure 11-1 Audio Path

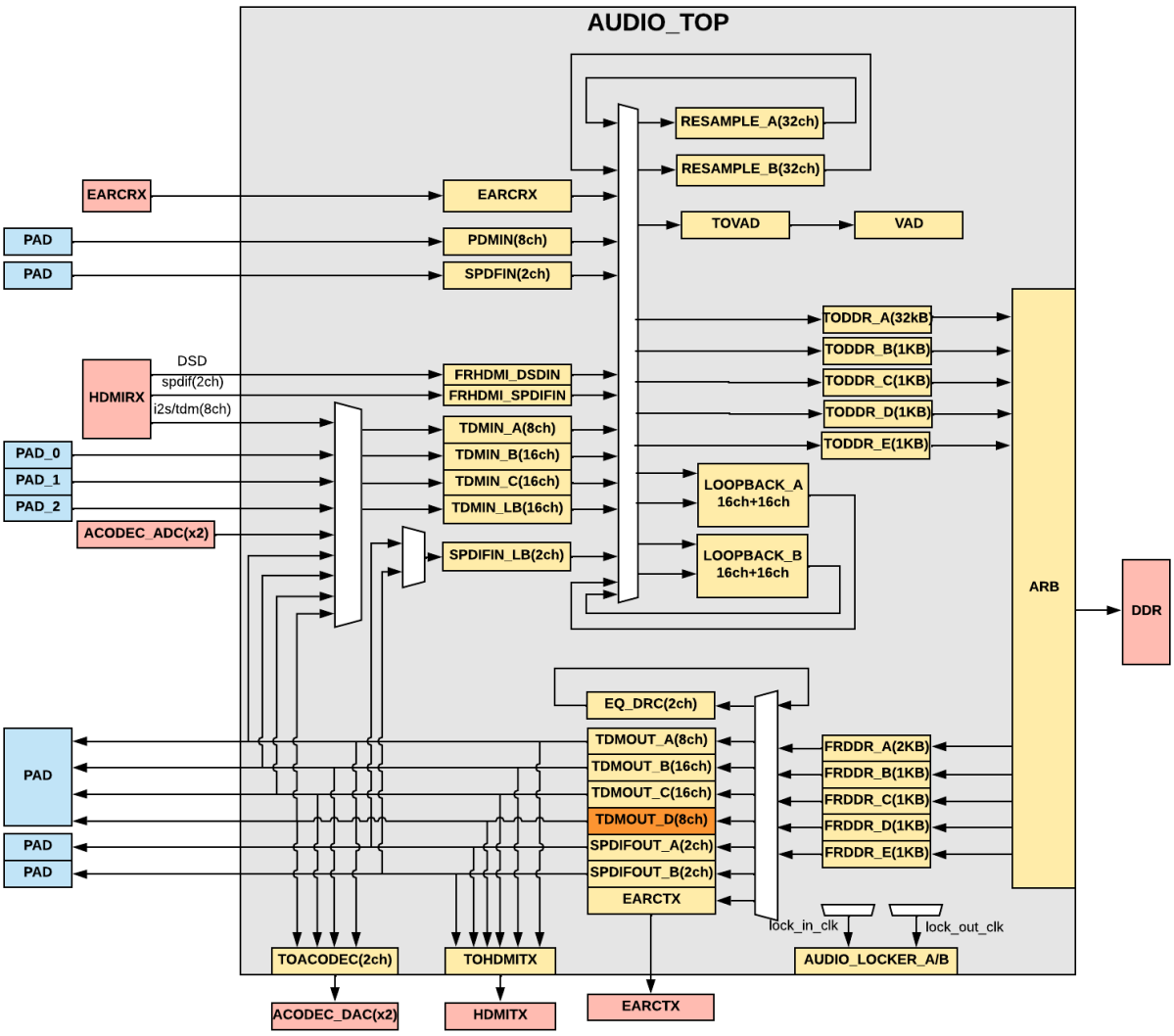

11.1 Audio Clock Tree

Audio clocks are described in the following table.

Clock Source	Diagram
6 master mclk	Figure 11-2
3 different phase sclk/lrclk generated by each mclk ● phase0 for pad (device); ● phase1 for tdmin; ● phase2 for tdmout;	

Amlogic Proprietary and Confidential
Copyright © Amlogic. All rights reserved.

Clock Source	Diagram
● generate master mclk to pad; ● generate mst_*_clk to pad by mst_*_ph0; ● generate tdmin_*_clk by mst_*_ph1 and slv_*_clk; ● generate tdmout_*_clk by mst_*_ph2 and slv_*_clk; ● generate tdmin_lb_clk by mst_*_ph2 and slv_*_clk;	Figure 11-3
other clocks	Figure 11-4
slv clocks are from PINMUX, which are defined as: ● slv_sclk_a = SLV_SCLK_0 ● slv_sclk_b = SLV_SCLK_1 ● slv_sclk_c = SLV_SCLK_2 ● slv_sclk_d = SLV_SCLK_3 ● slv_sclk_e = SLV_SCLK_4 ● slv_sclk_f = HDMIRX_I2S_SCLK ● slv_sclk_g = WORLD_SYNC ● others = 0 ● slv_lrclk_a = SLV_LRCLK_0 ● slv_lrclk_b = SLV_LRCLK_1 ● slv_lrclk_c = SLV_LRCLK_2 ● slv_lrclk_d = SLV_LRCLK_3 ● slv_lrclk_e = SLV_LRCLK_4 ● slv_lrclk_f = HDMIRX_I2S_LRCLK ● others = 0	-

Amlogic Proprietary and Confidential
Copyright © Amlogic. All rights reserved.

Figure 11-2 Audio Clock Tree (1)

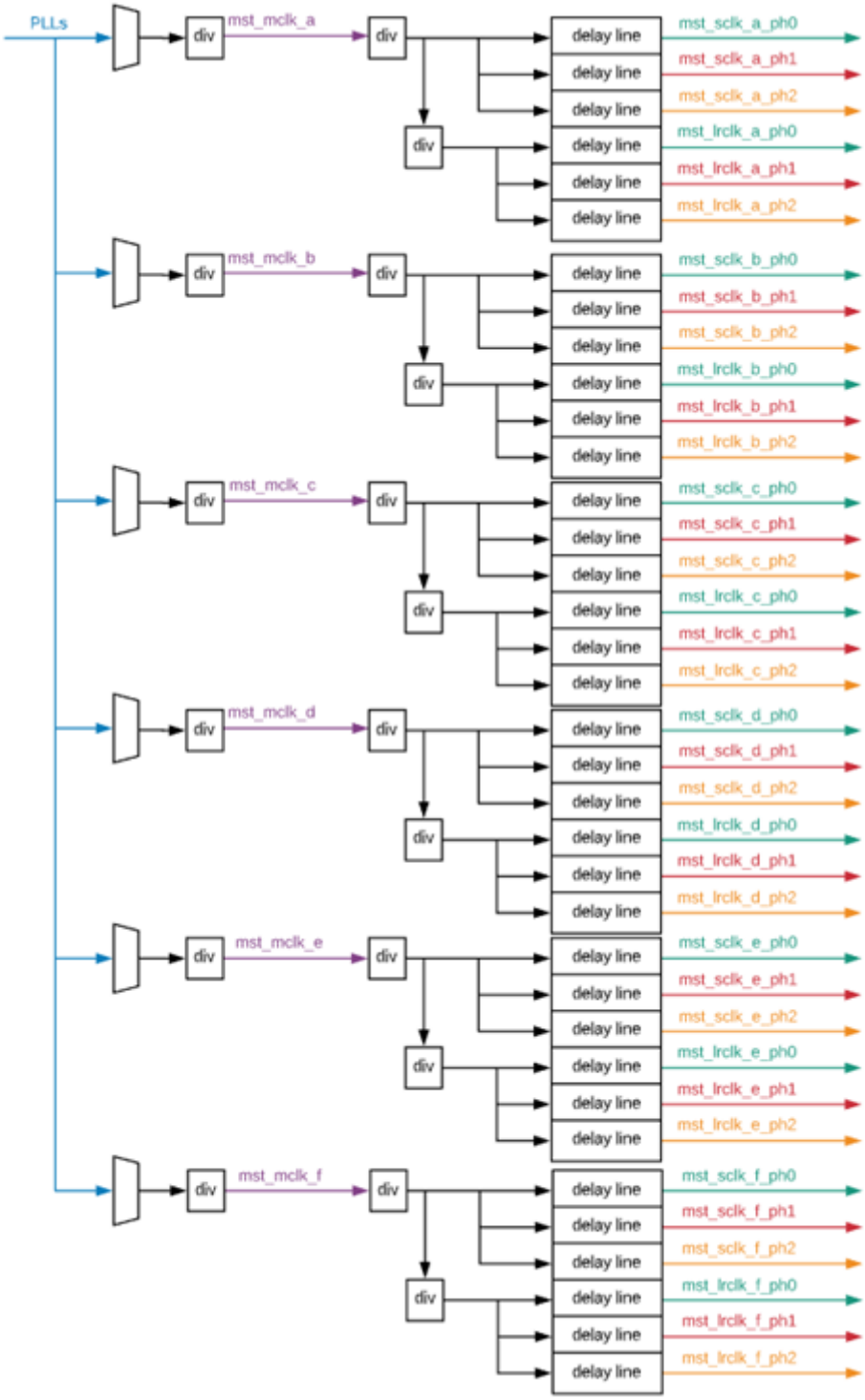

Amlogic Proprietary and Confidential
Copyright © Amlogic. All rights reserved.

Figure 11-3 Audio Clock Tree (2)

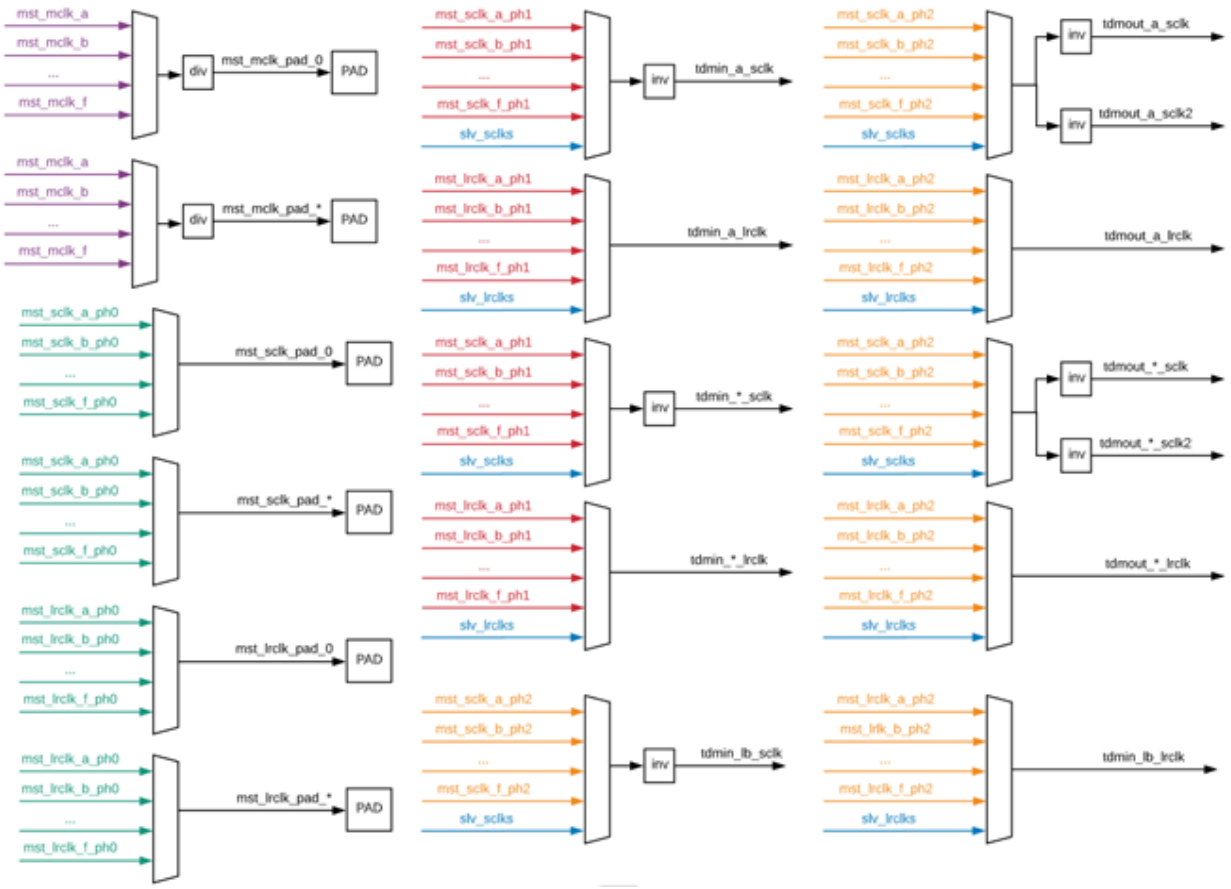

Figure 11-4 Audio Clock Tree (3)



11.2 Audio Input

Amlogic Proprietary and Confidential
Copyright © Amlogic. All rights reserved.

11.2.1 Overview

This section describes TDM input interface, SPDIF input interface and PDM input interface.

11.2.2 TDM Input Interface

TDM input interface works in the following way:

- All worked at tdm_sclk before AFIFO,
- Output is worked at sysclk;
- Add skew control between lrclk and data;
- Detect rise or fall edge of lrclk and clear bit_cnt/slot_cnt;
- Shift serial data in to 8 parallel register (max 32bits) ;
- Swap parallel register to sample data;
- Send sample data out in serials by mask/mute configure;

Below is the diagram of TDM input interface.

Figure 11-5 TDM Input

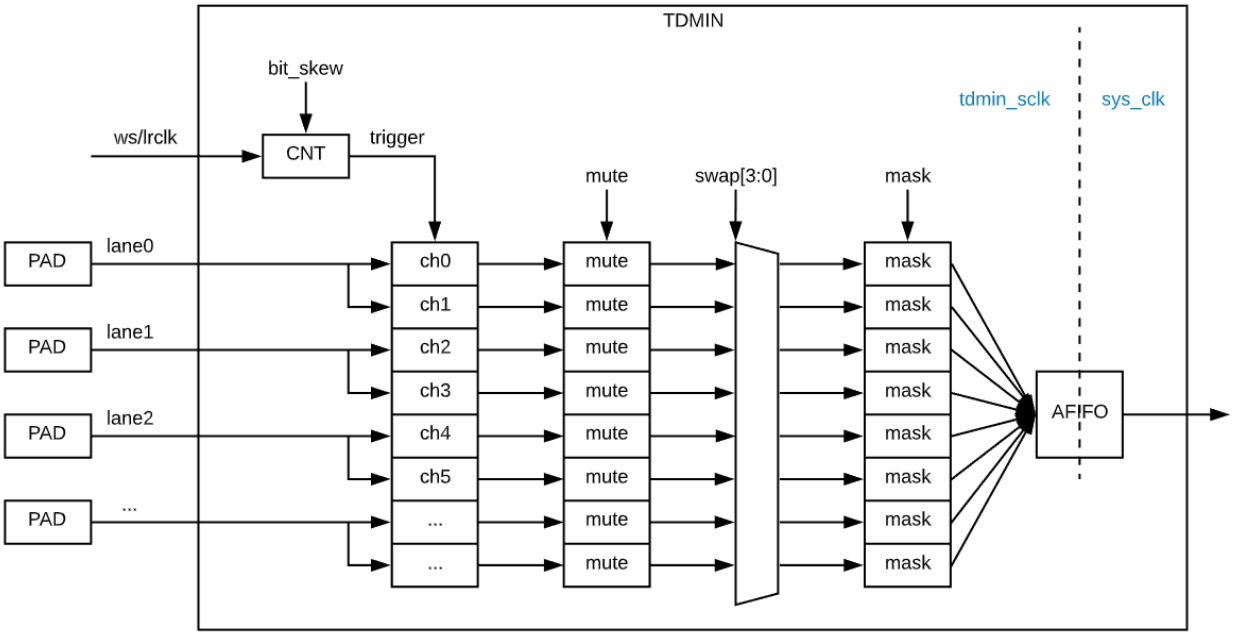

11.2.3 SPDIF Input Interface

SPDIF input interface works in the following way:

- All worked at spdifin_clk before AFIFO;
- After AFIFO worked at sysclk;
- Detect frequency by rise or fall edge;
- Capture data to shift reg;
- Store data to sample L channel or R channel;
- Detect PaPb if it's IEC60937;

Below is the diagram of SPDIF input interface.

Amlogic Proprietary and Confidential
Copyright © Amlogic. All rights reserved.

Figure 11-6 SPDIF Input

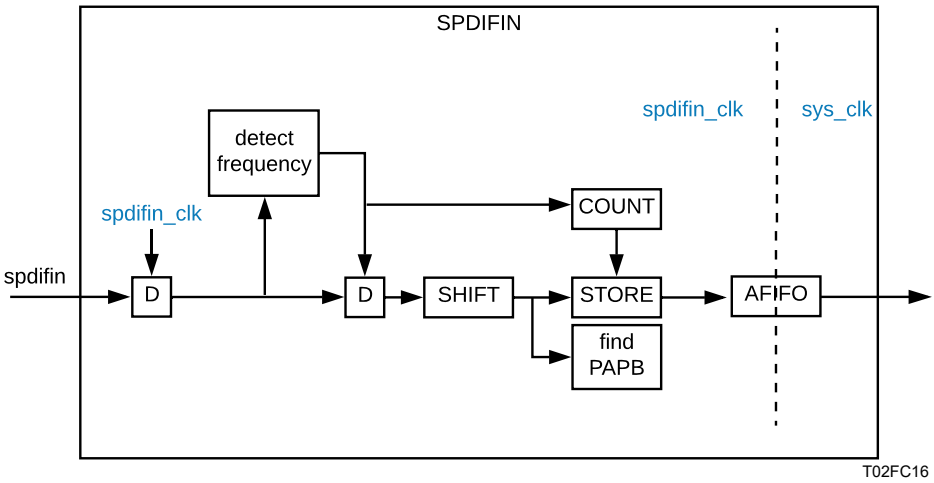

11.2.4 PDM

PDM input Decimation Filter is a highly programmable multistage decimation filter. It supports 4 inputs or 8 channel PDM digital microphone interface. Each channel contains one 9-stage CIC filter, 3 low power filters and a high pass filter. The PDM input bit rate is calculated with fs*OSR. OSR can be 64, 128, 192 or 256.

CIC filter may have 3 to 9 CIC stages and the down sample rate also can be programable. There is a multiplier and shifter to adjust the result to match the accuracy and CIC bit width.

There are 3 low pass filters which shared a 336x24 Coefficient memory and a 336x28 data memory. That means these 3 filters can be configured up to 336 taps together. The coefficient memory needs to be programmed through APB bus. For example, if filter 1 contains 140 taps, filter 2 contains 32 taps, filter 3 contain 146 steps, filter 1 coefficient will use 0~139 of the coefficient memory address; filter 2 coefficient will use 140~171 of coefficient memory address and filter 3 coefficient will use 172~317 of the coefficient memory address. The filter stage controller will based on the down sample rate, filter taps and the rounding mode of each filter to arrange the filter.

The final high pass filter is used to filter the DC current.

Figure 11-7 PDM Decimation Filter

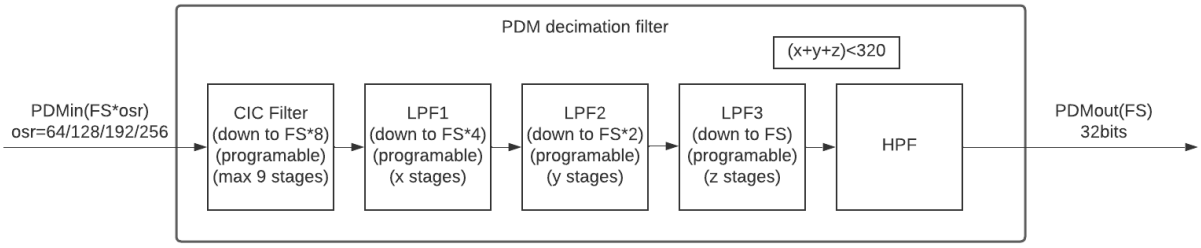

Amlogic Proprietary and Confidential
Copyright © Amlogic. All rights reserved.

Figure 11-8 PDM Structure

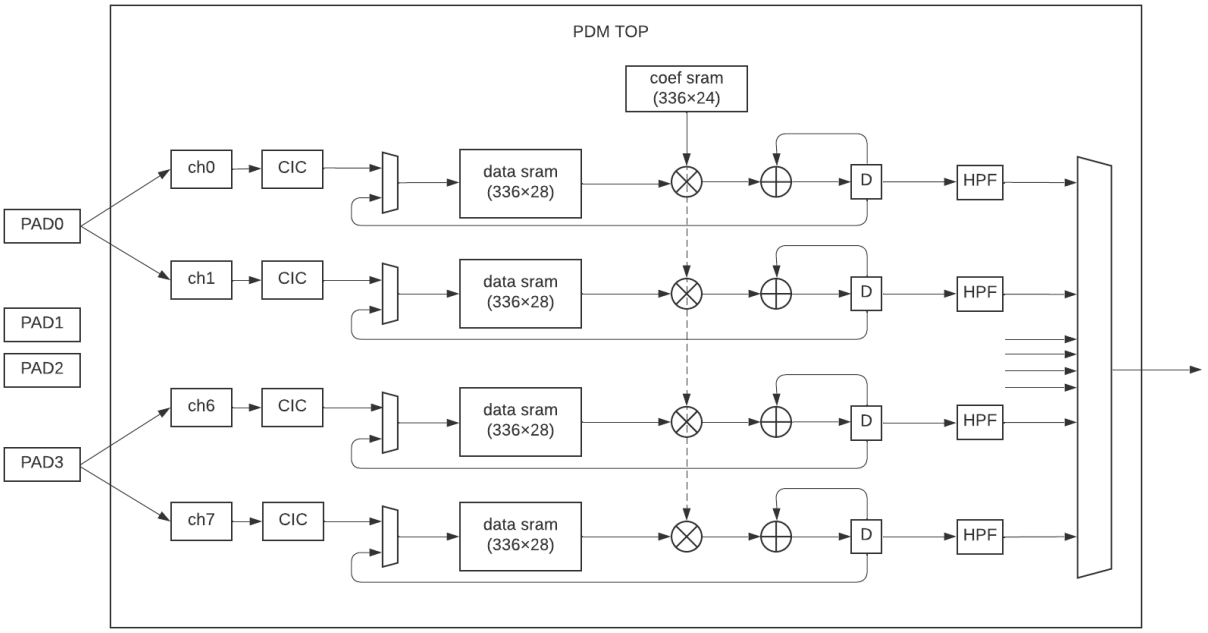

11.2.5 eARC RX

11.2.5.1 Overview

Structure

Figure 11-9 eARC RX Structure

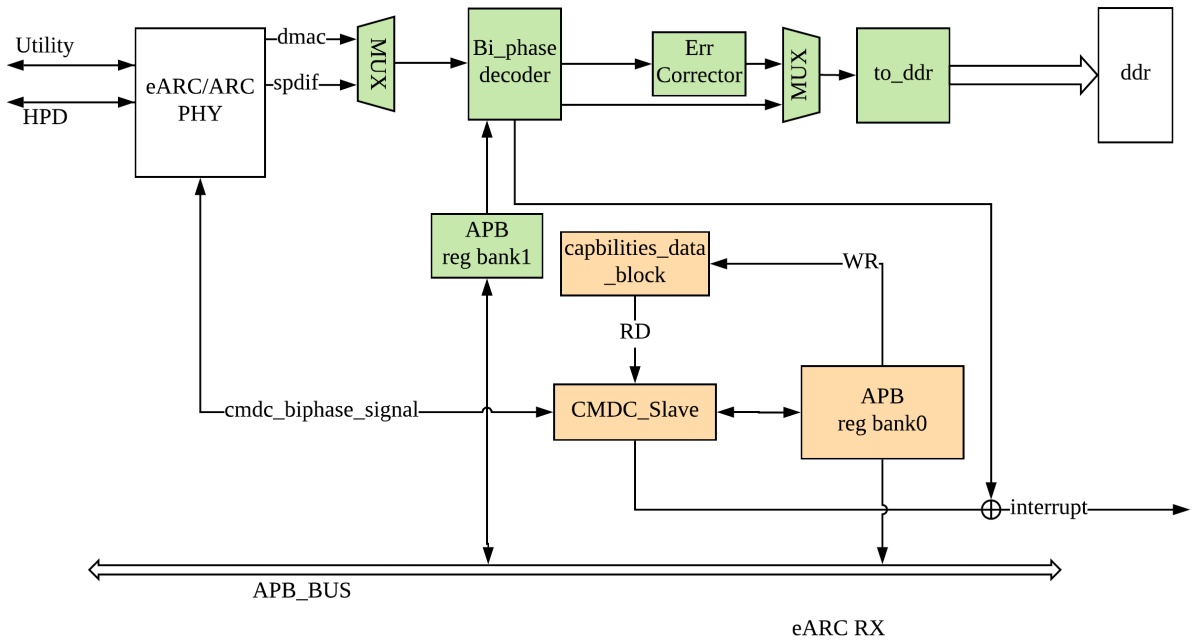

Amlogic Proprietary and Confidential
Copyright © Amlogic. All rights reserved.

eARC RX CMDC

The CMDC supports following features.

- Establish eARC mode, ARC mode, or mode switching between them.
- Status updates of eARC connection.
- Transmit audio channel delay information.
- Transmit eARC channel audio format compatibility information.

eARC RX DMAC

The DMAC supports both ARC and eARC functions. In eARC mode, the dmac path data is selected. In the ARC mode, the SPDIF path data is selected.

In eARC mode, dmac data and clock are from eARC RX analog phy. After bi_phase decoding, Error corrector processing is performed according to whether the audio is compressed or not, and data is written into DDR.

In ARC mode, spdif data comes from eARC RX analog phy, which is bi_phase decoded after down-sampling and data is written to DDR.

The user bit is supported to transmit data, and the received data can trigger the interrupt notification software to read.

11.2.5.2 Register Description

11.2.5.2.1 eARC RX CMDC Registers

Baseaddr : 0xfe333800 + offset*4

Table 11-1 EARC_RX_CMDC_TOP_CTRL0 0x0

Bit(s)	R/W	Default	Description
31	R/W	0	idle2_int 1: enable
30	R/W	0	idle1_int 1: enable
29	R/W	0	disc2_int 1: enable
28	R/W	0	disc1_int 1: enable
27	R/W	0	earc_int 1: enable
26	R/W	0	hb_status_int 1: enable
25	R/W	0	losthb_int 1: enable
24	R/W	0	timeout_int 1: enable
23	R/W	0	status_ch_int 1: enable
22	R/W	0	int_rec_invalid_id 1: enable
21	R/W	0	int_rec_invalid_offset 1: enable
20	R/W	0	int_rec_unexp 1: enable
19	R/W	0	int_rec_ecc_err 1: enable
18	R/W	0	int_rec_parity_err 1: enable
17	R/W	0	int_recv_packet 1: enable
16	R/W	0	int_rec_time_out 1: enable
15	R/W	0	cmdc_debug0 1: enable

Amlogic Proprietary and Confidential
Copyright © Amlogic. All rights reserved.

Bit(s)	R/W	Default	Description
14	R/W	0	cmdc_debug1 1: enable
13	R/W	0	cmdc_debug2 1: enable
12~7	R/W		reserved
6	R/W	0	mute_select 1: use bit5, 0: earc off
5	R/W	0	mute_contrl value of mannul mute control
4~0	R/W		reserved

Table 11-2 EARC_RX_CMDC_TOP_CTRL1 0x1

Bit(s)	R/W	Default	Description
31~13	R/W		reserved
12~8	R/W	RW, 0	reg_scan_reg
7~5	R/W		reserved
4~0	R/W	RW, 0	reg_top_soft_rst

Table 11-3 EARC_RX_CMDC_TOP_CTRL2 0x2

Bit(s)	R/W	Default	Description
31	R/W	0	reset_idle2_int
30	R/W	0	reset_idle1_int
29	R/W	0	reset_disc2_int
28	R/W	0	reset_disc1_int
27	R/W	0	reset_earc_int
26	R/W	0	reset_hb_status_int
25	R/W	0	reset_losthb_int
24	R/W	0	reset_timeout_int
23	R/W	0	reset_status_ch_int
22	R/W	0	reset_int_rec_invalid_id
21	R/W	0	reset_int_rec_invalid_offset
20	R/W	0	reset_int_rec_unexp
19	R/W	0	reset_int_rec_ecc_err
18	R/W	0	reset_int_rec_parity_err
17	R/W	0	reset_int_recv_packet
16	R/W	0	reset_int_rec_time_out
15~00	R/W		reserved

Amlogic Proprietary and Confidential
Copyright © Amlogic. All rights reserved.

Table 11-4 EARC_RX_CMDC_TIMER_CTRL0 0x3

Bit(s)	R/W	Default	Description
31~00	R	0	ro_cmdc_status0

Table 11-5 EARC_RX_CMDC_TIMER_CTRL1 0x4

Bit(s)	R/W	Default	Description
31~00	R	0	ro_cmdc_status0

Table 11-6 EARC_RX_CMDC_TIMER_CTRL2 0x5

Bit(s)	R/W	Default	Description
31~00	R	0	ro_cmdc_status0

Table 11-7 EARC_RX_CMDC_TIMER_CTRL3 0x6

Bit(s)	R/W	Default	Description
31~00	R	0	ro_cmdc_status0

Table 11-8 EARC_RX_CMDC_VSM_CTRL0 0x7

Bit(s)	R/W	Default	Description
31	R/W	0	sw_state_update
30~28	R/W	0	sw_state
27	R/W	0	arc_initiated
26	R/W	0	arc_terminated
25	R/W	0	arc_enable
24	R/W	0	man_hpd
23~22	R/W	0	hpd_sel
21~20	R/W	0	hpd_sel_earc
19	R/W	0	comma_cnt_rst
18	R/W	0	timeout_status_rst
17	R/W	0	losthb_status_rst
16	R/W	0	force_rst
15	R/W	0	auto_state
14	R/W	0	cmdc_state_en
13~00	R/W		reserved

Amlogic Proprietary and Confidential
Copyright © Amlogic. All rights reserved.

Table 11-9 EARC_RX_CMDC_VSM_CTRL1 0x8

Bit(s)	R/W	Default	Description
31~12	R/W	0	max_count_th idle done timing
11~8	R/W		reserved
7	R/W	0	reg_soft_rst idle done timing
6~4	R/W	0	time_sel idle done timing
3~2	R/W	0	soft_rst_sel idle done timing
1~0	R/W	0	enable_ctrl idle done timing

Table 11-10 EARC_RX_CMDC_VSM_CTRL2 0x9

Bit(s)	R/W	Default	Description
31~12	R/W	0	max_count_th comma off done timing
11~8	R/W		reserved
7	R/W	0	reg_soft_rst comma off done timing
6~4	R/W	0	time_sel comma off done timing
3~2	R/W	0	soft_rst_sel comma off done timing
1~0	R/W	0	enable_ctrl comma off done timing

Table 11-11 EARC_RX_CMDC_VSM_CTRL3 0xa

Bit(s)	R/W	Default	Description
31~12	R/W	0	max_count_th earc_time out timing
11~8	R/W		reserved
7	R/W	0	reg_soft_rst earc_time out timing
6~4	R/W	0	time_sel earc_time out timing
3~2	R/W	0	soft_rst_sel earc_time out timing
1~0	R/W	0	enable_ctrl earc_time out timing

Table 11-12 EARC_RX_CMDC_VSM_CTRL4 0xb

Bit(s)	R/W	Default	Description
31~12	R/W	0	max_count_th heartbeat lost timing
11~8	R/W		reserved
7	R/W	0	reg_soft_rst heartbeat lost timing
6~4	R/W	0	time_sel heartbeat lost timing
3~2	R/W	0	soft_rst_sel heartbeat lost timing
1~0	R/W	0	enable_ctrl heartbeat lost timing

Amlogic Proprietary and Confidential
Copyright © Amlogic. All rights reserved.

Table 11-13 EARC_RX_CMDC_VSM_CTRL5 0xc

Bit(s)	R/W	Default	Description
31~16	R/W		reserved
15~8	R/W	0	status_soft in earc heartbeat det timing
7	R/W	0	reg_soft_rst in earc heartbeat det timing
6	R/W	0	status_rst in earc heartbeat det timing
5~4	R/W		reserved
3~2	R/W	0	soft_rst_sel in earc heartbeat det timing
1~0	R/W	0	enable_ctrl in earc heartbeat det timing

Table 11-14 EARC_RX_CMDC_VSM_CTRL6 0xd

Bit(s)	R/W	Default	Description
31~17	R/W		reserved
16	R/W	0	cntl_hpd_sel in earc heartbeat det timing
15~4	R/W	0	cntl_hpd_valid_width in earc heartbeat det timing
3~0	R/W	0	cntl_hpd_glitch_width in earc heartbeat det timing

Table 11-15 EARC_RX_CMDC_VSM_CTRL7 0xe

Bit(s)	R/W	Default	Description
31~00	R/W	0	vsm_ctrl7

Table 11-16 EARC_RX_CMDC_VSM_CTRL8 0xf

Bit(s)	R/W	Default	Description
31~00	R/W	0	vsm_ctrl8

Table 11-17 EARC_RX_CMDC_VSM_CTRL9 0x10

Bit(s)	R/W	Default	Description
31~00	R/W	0	vsm_ctrl9

Table 11-18 EARC_RX_CMDC_SENDER_CTRL0 0x11

Bit(s)	R/W	Default	Description
31~02	R/W		reserved
1	R/W	0	hb_chg_conf_auto
0	R/W	1,	hb_chg_auto

Amlogic Proprietary and Confidential
Copyright © Amlogic. All rights reserved.

Table 11-19 EARC_RX_CMDC_PACKET_CTRL0 0x12

Bit(s)	R/W	Default	Description
31	R/W	0	packet_mode_enable packet control
30	R/W	0	free_enable packet control
29	R/W	0	soft_rst_man packet control
28~24	R/W	0	ready_th packet control
23~20	R/W		reserved
19~8	R/W	0	send_pre_th packet control
7~5	R/W		reserved
4	R/W	0	sw_state_update packet control
3~0	R/W	0	sw_state packet control

Table 11-20 EARC_RX_CMDC_PACKET_CTRL1 0x13

Bit(s)	R/W	Default	Description
31	R/W	0	ecc_endian send
30	R/W	0	pre_reg_st send
29~21	R/W		reserved
20~16	R/W	0	post_th send
15~14	R/W		reserved
13~8	R/W	0	pre_th
7~0	R/W	0	post_flag

Table 11-21 EARC_RX_CMDC_PACKET_CTRL2 0x14

Bit(s)	R/W	Default	Description
31~0	R/W		pre_flag unsigned,

Table 11-22 EARC_RX_CMDC_PACKET_CTRL3 0x15

Bit(s)	R/W	Default	Description
31	R/W	0	cmdc_en
30	R/W	0	cmdc_parity_mask
29	R/W	0	imeout_en w
28	R/W	0	ecc_check_en
27	R/W	0	rev_debug_en
26~16	R/W		reserved
15~0	R/W	0	timeout_th

Amlogic Proprietary and Confidential
Copyright © Amlogic. All rights reserved.

Table 11-23 EARC_RX_CMDC_PACKET_CTRL4 0x16

Bit(s)	R/W	Default	Name
31	R/W	0	ack_ignore
30	R/W	0	cmdc_tail_check_mask
29~20	R/W		reserved
19~0	R/W	0	cmdc_packet_head

Table 11-24 EARC_RX_CMDC_PACKET_CTRL5 0x17

Bit(s)	R/W	Default	Name
31~24	R/W	0	rev_debug_mask
23~20	R/W		reserved
19~0	R/W	0	cmdc_packet_head_mask

Table 11-25 EARC_RX_CMDC_PACKET_CTRL6 0x18

Bit(s)	R/W	Default	Name
31~20	R/W	0	recv_pre_threshold
19~9	R/W		reserved
8	R/W	0	rec_packet_d
7	R/W	0	rec_parity_err_cnt
6	R/W	0	rec_ecc_err_cnt
5	R/W	0	rec_unexp_cnt
4	R/W	0	rec_invalid_offset_cnt
3	R/W	0	rec_invalid_id_cnt
2	R/W	0	rec_timeout_cnt
1	R/W	0	rec_w_cnt
0	R/W	0	rec_r_cnt

Table 11-26 EARC_RX_CMDC_BIPHASE_CTRL0 0x19

Bit(s)	R/W	Default	Name
31~24	R/W	7, xx	reg_tns
23~16	R/W	0	delay_th
15~10	R/W		reserved
9	R/W	0	send_ack_en
8	R/W	0	sq_val_en
7	R/W	0	biphase_send_soft_rst
6	R/W	0	comma_soft_rst

Amlogic Proprietary and Confidential
Copyright © Amlogic. All rights reserved.

Bit(s)	R/W	Default	Name
5	R/W	0	fifo_rst
4	R/W	0	receiver_no_sender
3	R/W	0	sender_free
2	R/W	0	receiver_send
1	R/W	0	receiver_earc
0	R/W	0	receiver_free

Table 11-27 EARC_RX_CMDC_BIPHASE_CTRL1 0x1a

Bit(s)	R/W	Default	Name
31~16	R/W		reserved
15	R/W	send	ack_val_en
14~8	R/W		reserved
7~0	R/W	0	width send

Table 11-28 EARC_RX_CMDC_BIPHASE_CTRL2 0x1b

Bit(s)	R/W	Default	Description
31	R/W	0	ack_val_en send
30~20	R/W		reserved
19~16	R/W	0	ack_rate comma send
15~00	R/W	0	width comma sen

Table 11-29 EARC_RX_CMDC_BIPHASE_CTRL3 0x1c

Bit(s)	R/W	Default	Description
31~0	R/W	0	biphase_ctrl3

Table 11-30 EARC_RX_CMDC_DEVICE_ID_CTRL 0x1d

Bit(s)	R/W	Default	Description
31	R/W	0	apb_write apb bus wr/read
30	R/W	0	apb_read apb bus wr/read
29	R/W	0	apb_w_r_done apb bus wr/read
28	R/W	0	apb_w_r_reset apb bus wr/read
27~16	R/W		reserved
15~8	R/W	0	apb_w_r_id apb bus wr/read
7~0	R/W	0	apb_w_r_start_addr apb bus wr/read

Amlogic Proprietary and Confidential
Copyright © Amlogic. All rights reserved.

Table 11-31 EARC_RX_CMDC_DEVICE_WDATA 0x1e

Bit(s)	R/W	Default	Description
31~08	R/W		reserved
7~00	R/W	0	apb_write_data apb bus wr/rea

Table 11-32 EARC_RX_CMDC_DEVICE_RDATA 0x1f

Bit(s)	R/W	Default	Description
31~08	R/W		reserved
7~00	R/W	0	apb_read_data apb bus wr/rea

Table 11-33 EARC_RX_ANA_CTRL0 0x20

Bit(s)	R/W	Default	Description
31~00	R/W	0	ana_ctrl0

Table 11-34 EARC_RX_ANA_CTRL1 0x21

Bit(s)	R/W	Default	Description
31~00	R/W	0	ana_ctrl1

Table 11-35 EARC_RX_ANA_CTRL2 0x22

Bit(s)	R/W	Default	Description
31~00	R/W	0	ana_ctrl2

Table 11-36 EARC_RX_ANA_CTRL3 0x23

Bit(s)	R/W	Default	Description
31~00	R/W	0	ana_ctrl3

Table 11-37 EARC_RX_ANA_CTRL4 0x24

Bit(s)	R/W	Default	Description
31~00	R/W	0	ana_ctrl4

Table 11-38 EARC_RX_ANA_CTRL5 0x25

Bit(s)	R/W	Default	Description
31~00	R/W	0	ana_ctrl5

Amlogic Proprietary and Confidential
Copyright © Amlogic. All rights reserved.

Table 11-39 EARC_RX_ANA_STAT0 0x26

Bit(s)	R/W	Default	Description
31~00	R	0	ro_ANA_status0

Table 11-40 EARC_RX_CMDC_STATUS0 0x27

Bit(s)	R/W	Default	Description
31~00	R	0	ro_cmdc_status0

Table 11-41 EARC_RX_CMDC_STATUS1 0x28

Bit(s)	R/W	Default	Description
31~00	R	0	ro_cmdc_status1

Table 11-42 EARC_RX_CMDC_STATUS2 0x29

Bit(s)	R/W	Default	Description
31~00	R	0	ro_cmdc_status2

Table 11-43 EARC_RX_CMDC_STATUS3 0x2a

Bit(s)	R/W	Default	Description
31~00	R	0	ro_cmdc_status3

Table 11-44 EARC_RX_CMDC_STATUS4 0x2b

Bit(s)	R/W	Default	Description
31~00	R	0	ro_cmdc_status4

Table 11-45 EARC_RX_CMDC_STATUS5 0x2c

Bit(s)	R/W	Default	Description
31~00	R	0	ro_cmdc_status5

Table 11-46 EARC_RX_CMDC_STATUS6 0x2d

Bit(s)	R/W	Default	Description
31	R	0	ro_idle2_int
30	R	0	ro_idle1_int
29	R	0	ro_disc2_int
28	R	0	ro_disc1_int
27	R	0	ro_earc_int

Amlogic Proprietary and Confidential
Copyright © Amlogic. All rights reserved.

Bit(s)	R/W	Default	Description
26	R	0	ro_hb_status_int
25	R	0	ro_losthb_int
24	R	0	ro_timeout_int
23	R	0	ro_status_ch_int
22	R	0	ro_int_rec_invalid_id
21	R	0	ro_int_rec_invalid_offset
20	R	0	ro_int_rec_unexp
19	R	0	ro_int_rec_ecc_err
18	R	0	ro_int_rec_parity_err
17	R	0	ro_int_recv_packet
16	R	0	ro_int_rec_time_out
15~0	R		reserved

11.2.5.2.2 eARC RX DMAC Registers

Baseaddr : 0xfe333c00 + offset*4

Table 11-47 EARCRX_DMAC_TOP_CTRL0 0x00

Bit(s)	R/W	default	Description
31	RW	0	top work enable
30	RW	0	top soft reset
29:23	RW	0	reserved
22:20	RW	0	dmac debug select
19	RW	0	reserved
18:17	RW	0	Dmac_valid sel: 1x:i_earcrx_pll_dmac_valid_auto & i_earcrx_pll_dmac_valid 01:i_earcrx_pll_dmac_valid_auto 00:i_earcrx_pll_dmac_valid
16	RW	0	dmac sync without clk
15	RW	0	rst_n soft reset scan reg
14	RW	0	reserved
13	RW	0	rst_n sync clk_slow scan reg
12	RW	0	rst_n sync clk_analog scan reg
11	RW	0	clk_slow auto gate
10	RW	0	clk_analog auto gate
9:0	RW	0	reserved

Amlogic Proprietary and Confidential
Copyright © Amlogic. All rights reserved.

Table 11-48 EARCRX_DMAC_SYNC_CTRL0 0x01

Bit(s)	R/W	default	Description
31	RW	0	dmac sync module work enable
30	RW	0	afifo out reset
29	RW	0	afifo in reset
28:17	RW	0	reserved
16	RW	0	data from analog delay enable
15	RW	0	reserved
14:12	RW	0	delay cycles
11	RW	0	reserved
10:8	RW	0	valid last how many 0 will clear
7	RW	0	reserved
6:4	RW	0	valid last how may 1 will set
3:2	RW	0	dmac_valid_sel: 2'b1x:data_v_a &data_v_auto_a 2'b01:data_v_auto_a 2'b00:data_v_a
0	RW	0	dmac data invert

Table 11-49 EARCRX_DMAC_SYNC_CTRL1 0x23

Bit(s)	R/W	default	Description
31:19	RW	0	reserved
18	RW	0	i_earcrx_pll_dmac_valid_auto neg irq enable
17	RW	0	i_earcrx_pll_dmac_valid_auto stable state clear
16	RW	0	i_earcrx_pll_dmac_valid_auto stable check enable
15:0	RW	0	i_earcrx_pll_dmac_valid_auto stable set thread hold

Table 11-50 EARCRX_DMAC_SYNC_CTRL3 0x25

Bit(s)	R/W	default	Description
31	RW	0	unstable_t0_err_clr
19	RW	0	unstable_t0_check_en
18:16	RW	0	unstable_t0_tick_sel
15:0	RW	0	unstable_t0_thd

Table 11-51 EARCRX_DMAC_SYNC_CTRL4 0x26

Bit(s)	R/W	default	Description
31	RW	0	unstable_t1_err_clr
19	RW	0	unstable_t1_check_en

Amlogic Proprietary and Confidential
Copyright © Amlogic. All rights reserved.

Bit(s)	R/W	default	Description
18:16	RW	0	unstable_t1_tick_sel
15:0	RW	0	unstable_t1_thd

Table 11-52 EARCRX_DMAC_SYNC_CTRL5 0x27

Bit(s)	R/W	default	Description
31	RW	0	unstable_t2_err_clr
19	RW	0	unstable_t2_check_en
18:16	RW	0	unstable_t2_tick_sel
15:0	RW	0	unstable_t2_thd

Table 11-53 EARCRX_DMAC_SYNC_STAT1 0x28

Bit(s)	R/W	default	Description
31	RO	0	r_unstatble_t0_check
15:0	RO	0	r_unstatble_t0_cnt

Table 11-54 EARCRX_DMAC_SYNC_STAT2 0x29

Bit(s)	R/W	default	Description
31	RO	0	r_unstatble_t1_check
15:0	RO	0	r_unstatble_t1_cnt

Table 11-55 EARCRX_DMAC_SYNC_STAT3 0x28

Bit(s)	R/W	default	Description
18	RO	0	earc_data_v_slow
17	RO	0	earc_data_v_auto_slow
16	RO	0	earrx_dmacrx_sqout_slow
15:0	RO	0	r_unstatble_t2_cnt

Table 11-56 EARCRX_SPDIFIN_SAMPLE_CTRL0 0x03

Bit(s)	R/W	default	Description
31	RW	0	spdif in sample enable
30	RW	0	spdif in invert
29	RW	0	debug single enable
28	RW	0	0 detect by max_width 1 detect by min_width
27:23	RW	0	reserved

Amlogic Proprietary and Confidential
Copyright © Amlogic. All rights reserved.

Bit(s)	R/W	default	Description
22:20	RW	0	value
19:0	RW	0	base timer to detect sample mode change

Table 11-57 EARCRX_SPDIFIN_SAMPLE_CTRL1 0x04

Bit(s)	R/W	default	Description
31	RW	0	0 auto detect sample mode 1 force a fixed sample mode with reg_sample_mode
30	RW	0	reserved
29:20	RW	0	mode0 threathold time
19:10	RW	0	mode1 threathold time
9:0	RW	0	mode2 threathold time

Table 11-58 EARCRX_SPDIFIN_SAMPLE_CTRL2 0x05

Bit(s)	R/W	default	Description
31:30	RW	0	reserved
29:20	RW	0	mode3 threathold time
19:10	RW	0	mode4 threathold time
9:0	RW	0	mode5 threathold time

Table 11-59 EARCRX_SPDIFIN_SAMPLE_CTRL3 0x06

Bit(s)	R/W	default	Description
31:24	RW	0	mode0 sample time
23:16	RW	0	mode1 sample time
15:8	RW	0	mode2 sample time
7:0	RW	0	mode3 sample time

Table 11-60 EARCRX_SPDIFIN_SAMPLE_CTRL4 0x07

Bit(s)	R/W	default	Description
31:24	RW	0	mode4 sample time
23:16	RW	0	mode5 sample time
15:8	RW	0	mode6 sample time
7:0	RW	0	reserved

Amlogic Proprietary and Confidential
Copyright © Amlogic. All rights reserved.

Table 11-61 EARCRX_SPDIFIN_SAMPLE_CTRL5 0x08

Bit(s)	R/W	default	Description
31	RW	0	dmac_sqout filter enable
30	RW	0	dmac_sqout invert
29:27	RW	0	dmac_sqout filter tick select,0:sys_clk 1:1us 2:10us 3:100us 4:1ms
26:24	RW	0	dmac_sqout filter select
23:20	RW	0	reserved
19:0	RW	0	dmac_sqout filter tick

Table 11-62 EARCRX_SPDIFIN_SAMPLE_CTRL6 0x24

Bit(s)	R/W	default	Description
31:18	RW	0	reserved
17	RW	0	Hold_tri_sample:hold sample after 000 or 111
16	RW	0	Sample_mode_filter_en:use average value of min/max width
15:8	RW	0	Stable cycle min percent :N/256
7:0	RW	0	Stable cycle max percent :N/256

Table 11-63 EARCRX_SPDIFIN_SAMPLE_STAT0 0x09

Bit(s)	R/W	default	Description
31	RO	0	reserved
30:28	RO	0	sample mode
27:18	RO	0	min width timer
17: 8	RO	0	max width timer
7	RO	0	spdif_sqout buf 2
6	RO	0	spdif_sqout
5:0	RO	0	reserved

Table 11-64 EARCRX_SPDIFIN_SAMPLE_STAT1 0x0a

Bit(s)	R/W	default	Description
31:27	RO	0	reserved
26:16	RO	0	r_width_min when debug_en valid
15:9	RO	0	reserved
10:0	RO	0	r_width_max when debug_en valid

Table 11-65 EARCRX_SPDIFIN_MUTE_VAL 0x0b

Bit(s)	R/W	default	Description
31:0	RW	0	spdif in mute value

Amlogic Proprietary and Confidential
Copyright © Amlogic. All rights reserved.

Table 11-66 EARCRX_SPDIFIN_CTRL0 0x0c

Bit(s)	R/W	default	Description
31	RW	0	spdifin work enable
30	RW	0	0 ch_num = 0~383 1 ch_num = 0~1
29:28	RW	0	reserved
27	RW	0	debug enable
26	RW	0	star add ch_cnt to ch_num
25	RW	0	papb check enalbe
24	RW	0	nonpcm2pcm_th enable
23:12	RW	0	if long time didn't detect PaPb again, will generate irq
11:8	RW	0	for stat1/stat2 select
7	RW	0	mute channel l
6	RW	0	mute channel r
5:4	RW	0	reserved
3	RW	0	valid check enable
2	RW	0	parity check enable
1	RW	0	spdif data invert
0	RW	0	reserved

Table 11-67 EARCRX_SPDIFIN_CTRL1 0x0d

Bit(s)	R/W	default	Description
31:24	RW	0	reserved
31:24	RW	0	internal irq status clear
23:12	RW	0	mute block check time thd
11:9	RW	0	mute block check tick sel
8	RW	0	ext 0 sync check for papb
7:0	RW	0	sync 0 mask

Table 11-68 EARCRX_SPDIFIN_CTRL2 0x0e

Bit(s)	R/W	default	Description
31:24	RW	0	mute bit in channel st
23:19	RW	0	mute min block number to declare
18	RW	0	mute bit in channel st L or R
17	RW	0	mute block number check enable
16	RW	0	auto clear compress mode when channel status not compress
15	RW	0	auto clear compress mode when nonpcm2pcm

Amlogic Proprietary and Confidential
Copyright © Amlogic. All rights reserved.

Bit(s)	R/W	default	Description
14	RW	0	auto change earc/arc
13	RW	0	user l or r channel status to check papb
12	RW	0	0:data valid after 1 block;1: in 1st block if exit papb ,data valid after papb
11	RW	0	start write toddr 1:from papb check,0 from preamble Z, valid when reg_earcin_ check_papb set
10	RW	0	auto reset will detect format change
9	RW	0	compress B pcpd select : 1:next 4th subframe data 0:next sub frame data
8:4	RW	0	papb msb position in data
3	RW	0	when in arc mode,spdif on force enable
2	RW	0	force value
1	RW	0	earc mode force enable
0	RW	0	force value

Table 11-69 EARCRX_SPDIFIN_CTRL3 0x0f

Bit(s)	R/W	default	Description
31:16	RW	0	earc mode pa value
15:0	RW	0	earc mode pb value

Table 11-70 EARCRX_SPDIFIN_CTRL4 0x20

Bit(s)	R/W	default	Description
31	RW	0	Reserved
30	RW	0	Add_ch_r : add right channel when stop at left channel send out
29	RW	0	reg_bc_val0_en,when auto add last R channle data, flag in chnum
28:20	RW	0	Unstable mask enable: 8:xz_err :when find z,subframe!=191 or findx subfram ==191 7:subframe cnt err2,subframe>384 in one block 6:subframe cnt err1,subframe!=384 in one block 5:cycle time err2:cycle time <= min 4:cycle time err2:cycle time >= max 3:parity err 2:bit_cnt err2:bit cnt > 64 in one subframe 1:bit_cnt err1:bit cnt !=64 in one subframe 0:xyz err:frame structure error, xyz follow error
19:16	RW	0	Stable zcnt:stable after received N preamble Z
15:0	RW	0	Reserved

Amlogic Proprietary and Confidential
Copyright © Amlogic. All rights reserved.

Table 11-71 EARCRX_SPDIFIN_CTRL5 0x21

Bit(s)	R/W	default	Description
31	RW	0	Stable timeout status clr
27:16	RW	0	Stable timeout check thd
14:12	RW	0	Stable timeout thd tick sel
11	RW	0	Stable timeout check en
8:0	RW	0	Unstable int mask

Table 11-72 EARCRX_SPDIFIN_CTRL6 0x22

Bit(s)	R/W	default	Description
31:17	RW	0	reserved
16	RW	0	Check time enable:count the bit number in set check time, can read the count value in STAT2
15:0	RW	0	Check time thd

Table 11-73 EARCRX_SPDIFIN_STAT0 0x10

Bit(s)	R/W	default	Description
31	RO	0	r_valid_bit[0]
30	RO	0	r_spdifin_cps
29	RO	0	r_spdif_out_valid_mask
28:19	RO	0	reserved
18	RO	0	r_spdif_lr_flag
17	RO	0	r_spdifin_v
16	RO	0	r_chst_mute
15:13	RO	0	r_data_rdy[2:0]
12	RO	0	c_spdifin_sel
11	RO	0	c_spdifin_valid_sel
10	RO	0	c_sample_stable_sel
9	RO	0	c_earc_mode
8	RO	0	r_spdifin_en
7	RO	0	r_dmacrx_en
6	RO	0	c_find_papb
5	RO	0	c_valid_change
4	RO	0	c_find_nonpcm2pcm
3	RO	0	c_pcpd_change
2	RO	0	c_ch_status_change

Amlogic Proprietary and Confidential
Copyright © Amlogic. All rights reserved.

Bit(s)	R/W	default	Description
1	RO	0	i_sample_mode_change
0	RO	0	r_parity_err

Table 11-74 EARCRX_SPDIFIN_STAT1 0x11

Bit(s)	R/W	default	Description
31:0	RO	0	0: reg_spdifin_stat1 = r_ch_status_l[31:0] ; 1: reg_spdifin_stat1 = r_ch_status_l [63:32] ; 2: reg_spdifin_stat1 = r_ch_status_l[95:64] ; 3: reg_spdifin_stat1 = r_ ch_status_l[127:96] ; 4: reg_spdifin_stat1 = r_ch_status_l[159:128] ; 5: reg_spdi- fin_stat1 = r_ch_status_l[191:160] ; 6: reg_spdifin_stat1 = {r_pc_data,r_pd_da- ta}; 7: reg_spdifin_stat1 = 32'd0; 8: reg_spdifin_stat1 = r_ch_status_r[31:0] ; 9: reg_spdifin_stat1 = r_ch_status_r[63:32] ; 10: reg_spdifin_stat1 = r_ch_status_r [95:64] ; 11: reg_spdifin_stat1 = r_ch_status_r[127:96] ; 12: reg_spdifin_stat1 = r_ch_status_r[159:128] ; 13: reg_spdifin_stat1 = r_ch_status_r[191:160] ; 14: reg_spdifin_stat1 = {r_pc_data,r_pd_data} ; 15: reg_spdifin_stat1 = 32'd0;

Table 11-75 EARCRX_SPDIFIN_STAT2 0x12

Bit(s)	R/W	default	Description
31:0	RW	0	0 : r_z_width 1 : {16'd0,r_frame_cnt_min,r_frame_cnt_max} 2:bit number in set check time

Table 11-76 EARCRX_DMAC_UBIT_CTRL0 0x13

Bit(s)	R/W	default	Description
31	RW	0	dmac user bit decode enable
30:24	RW	0	iu sync value
23:16	RW	0	generate irq when fifo level pass some threthold
15	RW	0	max distance between IUs to set lost
14	RW	0	iu sync code enable 0 : all iu to fifo 1 only sync iu packet to fifo
13:12	RW	0	00 off 01 use l channel userbit 10 use r channel userbit 11 user lr channel userbit
11:8	RW	0	max distance bewteen IUs value
7	RW	0	fifo_thd irq enable
6	RW	0	when lost, initial fifo
5	RW	0	fifo initial
4:0	RW	0	user bit position in data

Table 11-77 EARCRX_IU_RDATA 0x14

Bit(s)	R/W	default	Description
31:8	RW	0	reserved
7:0	RW	0	iu data,read only

Amlogic Proprietary and Confidential
Copyright © Amlogic. All rights reserved.

Table 11-78 EARCRX_ERR_CORRECT_CTRL0 0x16

Bit(s)	R/W	default	Description
31	RW	0	err correct work enable
30	RW	0	reserved
29	RW	0	reset afifo out side
28	RW	0	reset afifo in side
27:7	RW	0	reserved
6	RW	0	bch output 16bit data msb is 27 or 19
5	RW	0	bch output data revers
4	RW	0	bch input ecc msb/lsb
3	RW	0	bch input ecc revers
2	RW	0	bch input data revers
1	RW	0	0 off 1 compress audio mode
0	RW	0	force work mode enable

Table 11-79 EARCRX_ANA_RST_CTRL0 0x18

Bit(s)	R/W	default	Description
31	RW	0	analog reset check work enable
30	RW	0	analog reset from register enable
29	RW	0	soft reset value
28	RW	0	analog reset work enable 0: from bit31 1: from bit31 & top_work_en
27	RW	0	reserved
26:23	RW	0	when new format data in, hold reset after N posedge
22:20	RW	0	earcrx_div2 hold thresthold tick select
19:0	RW	0	earcrx_div2 hold thresthold

Table 11-80 EARCRX_ANA_RST_CTRL1 0x19

Bit(s)	R/W	default	Description
31	RW	0	filter enable
30:28	RW	0	filter select
27:25	RW	0	filter tick sel,0:sys_clk 1:1us 2:10us 3:100us 4:1ms
24:16	RW	0	filter tick time
15	RW	0	filter enable
14:12	RW	0	filter select
11:9	RW	0	filter tick sel,0:sys_clk 1:1us 2:10us 3:100us 4:1ms
8:0	RW	0	filter tick time

Amlogic Proprietary and Confidential
Copyright © Amlogic. All rights reserved.

11.2.5.2.3 eARC RX Top Registers

Baseaddr : 0xfe333e00 + offset*4

Table 11-81 EARCRX_TOP_CTRL0 0x00

Bit(s)	R/W	default	Description
31:10	RW	0	reserved
9:8	RW	0	top debug select
7	RW	0	force spdif_rx_en to reg_spdif_rx_en_force_value
6	RW	0	value
5	RW	0	force spdif_rx_sqen to reg_spdif_rx_sqe
4	RW	0	value
3	RW	0	force dmacrx_en to reg_dmacrx_en_force_value
2	RW	0	value
1	RW	0	force dmacrx_sqen to reg_dmacrx_sqen_force_value
0	RW	0	value

Table 11-82 EARCRX_DMAC_INT_MASK 0x01

Bit(s)	R/W	default	Description
31:30	RW	0	reserved
29:0	RW	0	dmac int mask

Table 11-83 EARCRX_DMAC_INT_PENDING 0x02

Bit(s)	R/W	default	Description
31:30	RW	0	reserved
29:0	RW	0	dmac int pending, 29:biphase stable timeout int_set 28:dmac_pll_unstable 27:xz_err :when find z,subframe!=191 or findx subfram ==191 26:xyz err:frame structure error,xyz follow error 25:bit_cnt err1:bit cnt !=64 in one subframe 24:bit_cnt err2:bit cnt > 64 in one subframe 23:parity err 22:cycle time err2:cycle time >= max 21:cycle time err2:cycle time <= min 20:subframe cnt err1,subframe!=384 in one block 19:subframe cnt err2,subframe>384 in one block 18:err_corrt_lr_err 17 :earcrx_ana_rst c_new_format_set 16 :earcrx_ana_rst c_earcrx_div2_hold_set 15 :earcrx_err_correct c_bcherr_int_set 14 :earcrx_err_correct r_afifo_overflow_set 13 :earcrx_err_correct r_fifo_overflow_set 12 :earcrx_user_bit_check r_fifo_overflow 11 :earcrx_user_bit_check c_fifo_thd_pass 10 :earcrx_user_bit_check c_u_pk_lost_int_set 9 :earcrx_user_bit_check c_iu_pk_end 8 :earcrx_biphase_decode c_chst_mute_clr 7 :earcrx_biphase_decode c_find_papb 6 :earcrx_biphase_decode c_valid_change 5 :earcrx_biphase_decode c_find_nonpcm2pcm 4 :earcrx_biphase_decode c_pcpd_change 3 :earcrx_biphase_decode c_ch_status_change 2 :earcrx_biphase_decode i_sample_mode_change 1 :earcrx_biphase_decode r_parity_err 0 :earcrx_dmac_sync afifo_overflow

Amlogic Proprietary and Confidential
Copyright © Amlogic. All rights reserved.

Table 11-84 EARCRX_CMDC_INT_MASK 0x03

Bit(s)	R/W	default	Description
31:16	RW	0	reserved
15:0	RW	0	cmdc int mask

Table 11-85 EARCRX_CMDC_INT_PENDING 0x04

Bit(s)	R/W	default	Description
31:16	RW	0	reserved
15:0	RO	0	cmdc int pending,15 : idle2_int 14 : idle1_int 13 : disc2_int 12 : disc1_int 11 : earc_int 10 : hb_status_int 9 : losthb_int 8 : timeout_int 7 : status_ch_int 6 : int_rec_invalid_id 5 : int_rec_invalid_offset 4 : int_rec_unexp 3 : int_rec_ecc_err 2 : int_rec_parity_err 1 : int_recv_packet 0 : int_rec_time_out

Table 11-86 EARCRX_ANA_CTRL0 0x05

Bit(s)	R/W	default	Description
31	RW	0	earcrx_en_d2a
30:29	RW	0	reserved
28:24	RW	0	earcrx_cmdcrx_reftrim
23:20	RW	0	earcrx_idr_trim
19:15	RW	0	earcrx_rterm_trim
14:12	RW	0	earcrx_cmdctx_ack_hystrim
11:7	RW	0	earcrx_cmdctx_ack_reftrim
6	RW	0	earcrx_cmdcrx_vrefon_sel
5:4	RW	0	earcrx_cmdcrx_rcfilter_sel
2:0	RW	0	earcrx_cmdcrx_hystrim

Table 11-87 EARCRX_ANA_CTRL1 0x06

Bit(s)	R/W	default	Description
23:16	RW	0	earcrx_reserv
15:12	RW	0	reserved
11	RW	0	earcrx_rxcom_on_sel
10	RW	0	earcrx_idc_sel
9	RW	0	earcrx_cmdcrx_spdif_dat_invsel
8	RW	0	earcrx_dmac_out_invsel
7:4	RW	0	earcrx_cmdcrx_spdif_sqcon
3:0	RW	0	earcrx_dmacrx_sqcon

Amlogic Proprietary and Confidential
Copyright © Amlogic. All rights reserved.

Table 11-88 EARCRX_PLL_CTRL0 0x08

Bit(s)	R/W	default	Description
31:30	RW	0	reserved
29	RW	0	earcrx_pll_self_reset
28	RW	0	earcrx_pll_en
27:25	RW	0	reserved
24	RW	0	earcrx_pll_digital_rstn_sel
23	RW	0	earcrx_pll_dmacrx_sqout_rstn_sel
22:15	RW	0	reserved
14:10	RW	0	earcrx_pll_n
9:0	RW	0	reserved

Table 11-89 EARCRX_PLL_CTRL1 0x09

Bit(s)	R/W	default	Description
31	RW	0	earcrx_pll_afc_bypass
30:29	RW	0	reserved
28:24	RW	0	earcrx_pll_afc_in
23:22	RW	0	reserved
21:20	RW	0	earcrx_pll_adj_ldo
19	RW	0	reserved
18:16	RW	0	earcrx_pll_alpha
15:14	RW	0	reserved
13:12	RW	0	earcrx_pll_bb_mode
11	RW	0	reserved
10:8	RW	0	earcrx_pll_data_sel
7	RW	0	earcrx_pll_dco_clk_sel
6	RW	0	earcrx_pll_dco_m_en
5	RW	0	earcrx_pll_fast_lock
4	RW	0	earcrx_pll_filter_mode
3	RW	0	earcrx_pll_fix_en
2:0	RW	0	reserved

Table 11-90 EARCRX_PLL_CTRL2 0x0a

Bit(s)	R/W	default	Description
31:28	RW	0	earcrx_pll_filter_pvt1
27:24	RW	0	earcrx_pll_filter_pvt2
23	RW	0	reserved

Amlogic Proprietary and Confidential
Copyright © Amlogic. All rights reserved.

Bit(s)	R/W	default	Description
22:20	RW	0	earcrx_pll_lambda0
19	RW	0	reserved
18:16	RW	0	earcrx_pll_lambda1
15:14	RW	0	reserved
13:8	RW	0	earcrx_pll_lk_s
7:4	RW	0	earcrx_pll_lk_w
3:2	RW	0	reserved
1:0	RW	0	earcrx_pll_lkw_sel

Table 11-91 EARCRX_PLL_CTRL3 0x0b

Bit(s)	R/W	default	Description
31	RW	0	earcrx_pll_lock_f
30	RW	0	reserved
29:28	RW	0	earcrx_pll_lock_long
27:26	RW	0	reserved
25:24	RW	0	earcrx_pll_pfd_gain
23:22	RW	0	reserved
21:20	RW	0	earcrx_pll_bias_adj
19	RW	0	reserved
18:16	RW	0	earcrx_pll_rou
15	RW	0	earcrx_pll_tdc_mode
14	RW	0	earcrx_pll_acq_range
13	RW	0	earcrx_pll_dco_sdm_en
12:6	RW	0	reserved
5:0	RW	0	earcrx_pll_reve

Table 11-92 EARCRX_PLL_STAT0 0x0c

Bit(s)	R/W	default	Description
31	RO	0	earcrx_pll_dmac_valid
30	RO	0	earcrx_pll_dmac_valid_auto
29	RO	0	earcrx_pll_afc_done_a2d
28:10	RO	0	reserved
9:0	RO	0	earcrx_pll_reg_out

11.3 Audio Output

Amlogic Proprietary and Confidential
Copyright © Amlogic. All rights reserved.

11.3.1 Overview

This section describes TDM output interface, SPDIF output interface and audio REQ_FRDDR sub-module.

11.3.2 TDM Output Interface

TDM output interface works in the following way:

- All work at tdm_sclk;
- Detect sample valid by tdm_lrclk rise edge and clear bit_cnt/slot_cnt;
- Request data from FRDDR and store to sample register;
- Swap sample register;
- Shift send out data;

Below is the diagram of TDM output interface.

Figure 11-10 TDM Output

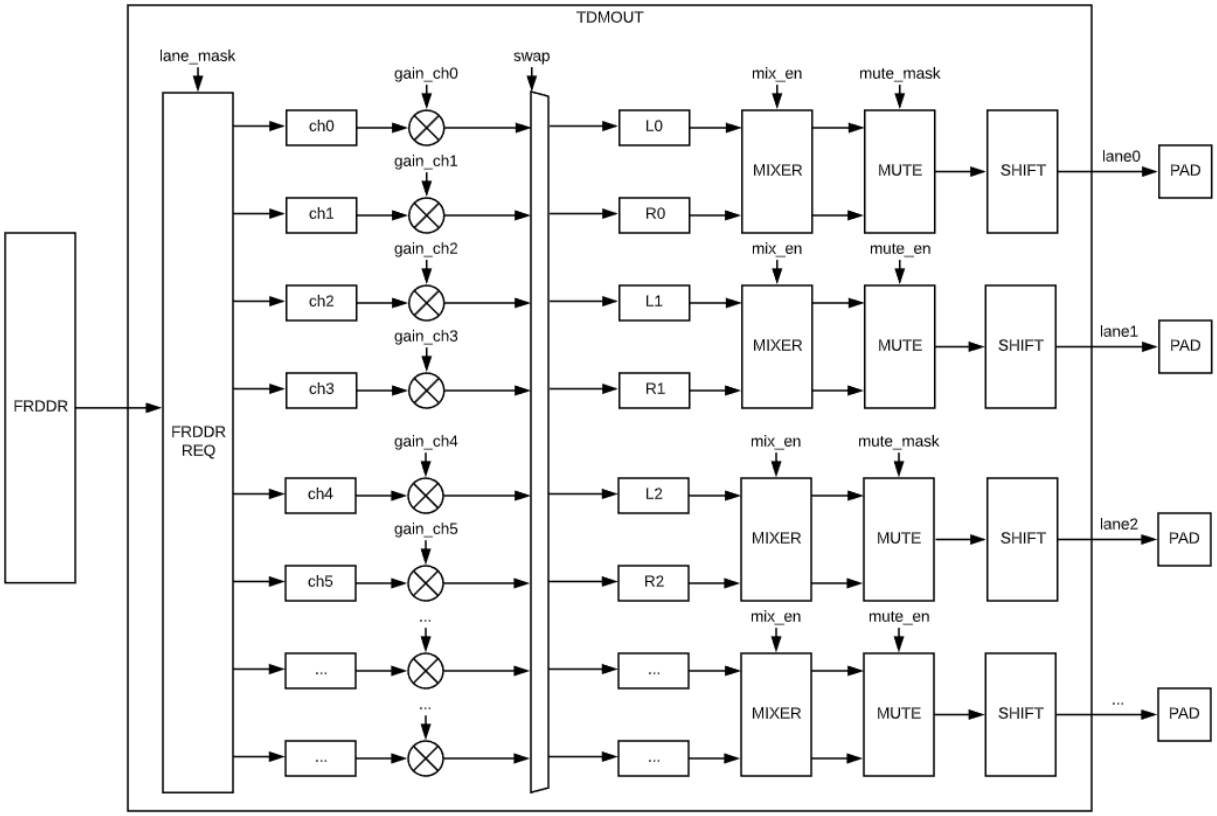

11.3.3 SPDIF Output Interface

The SPDIF output interface works in the following way:

- All work at spdifout clk;
- Request data from FRDDR and store to sample L0/R0
- Select data by bit_cnt/slot_cnt and send out;

Below is the diagram of SPDIF output interface.

Amlogic Proprietary and Confidential
Copyright © Amlogic. All rights reserved.

Figure 11-11 SPDIF Output Interface

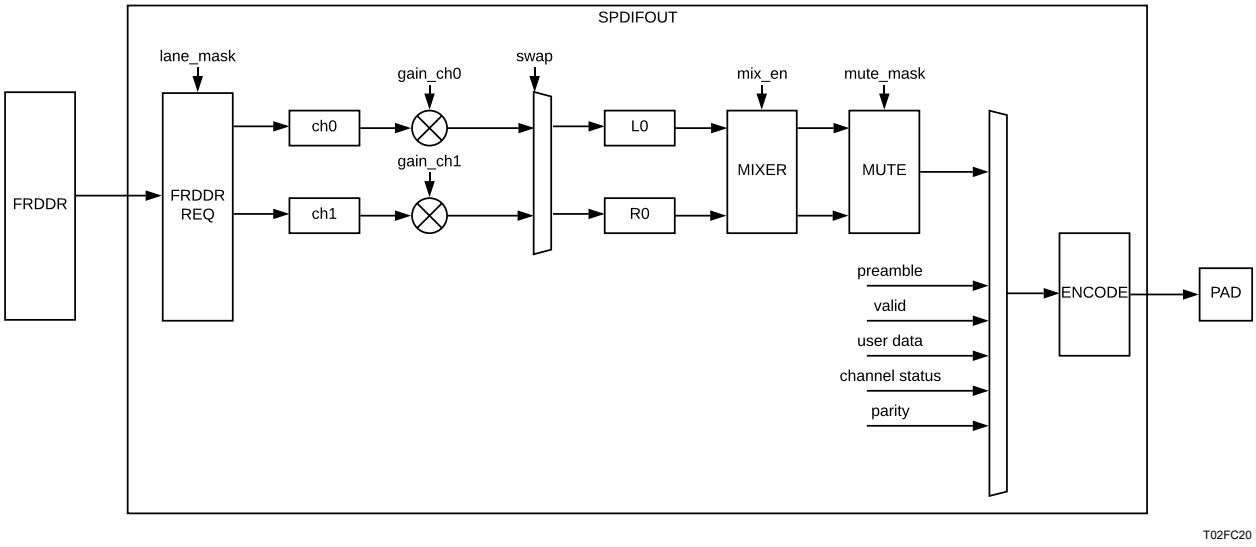

The SPDIF (encode) add same source select. The SPDIF out can be the same with i2s 0/1/2/..., and can select before or after eq/drc.

11.3.4 Audio REQ_FRDDR

Audio Req_Frddr transfers data from sys clock to out clock and change format in the following way;

- Wait for OUT enable and FRDDR initial done;
- Request first time and fill sample;
- When received update data, it will send request to FRDDR and update sample;

Below is a diagram of Audio REQ_FRDDR.

Amlogic Proprietary and Confidential
Copyright © Amlogic. All rights reserved.

Figure 11-12 Audio REQ_FRDDR

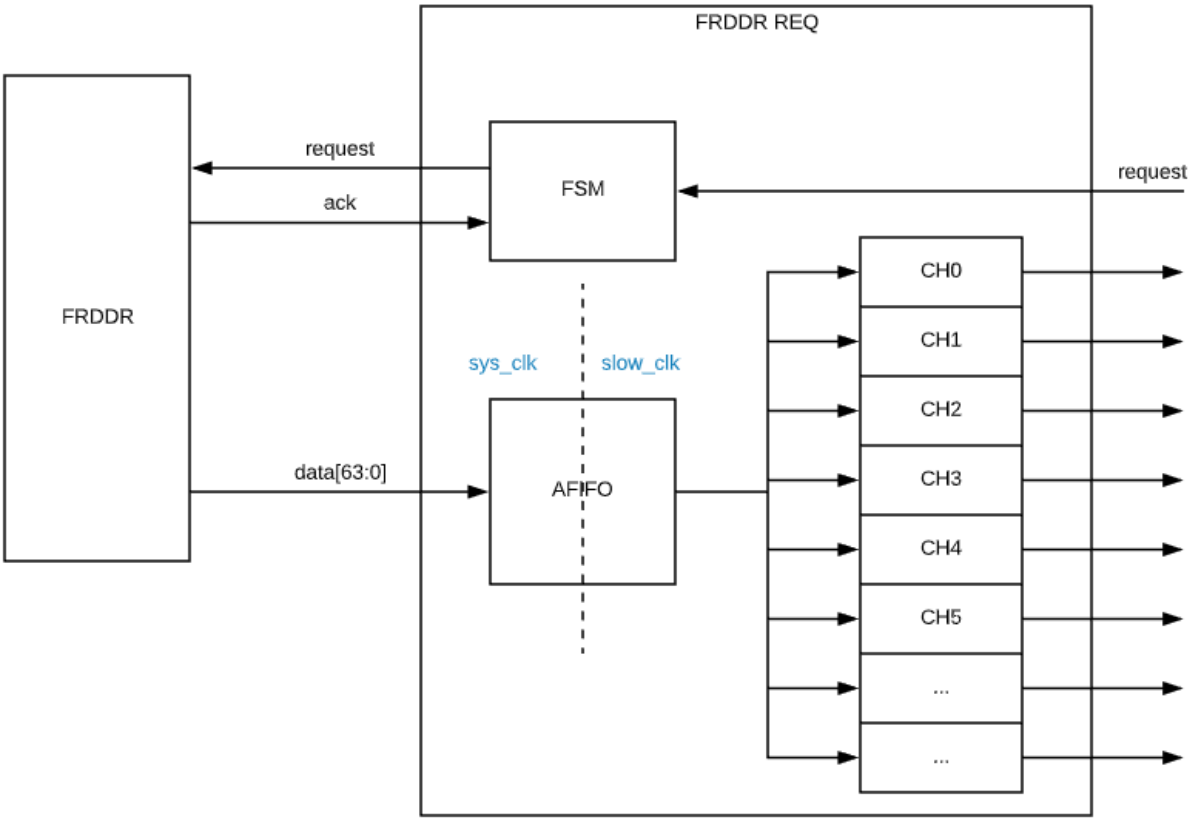

Amlogic Proprietary and Confidential
Copyright © Amlogic. All rights reserved.

11.3.5 eARC TX

11.3.5.1 Overview

Structure

Figure 11-13 eARC TX Structure

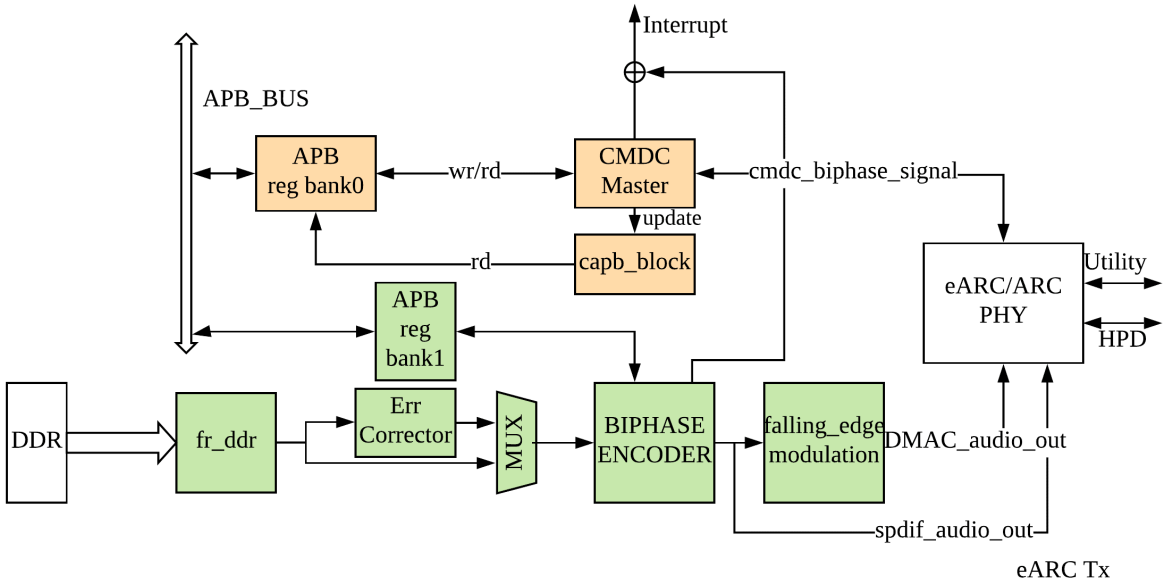

eARC TX CMDC

The CMDC supports following features.

- Establish eARC mode, ARC mode, or mode switching between them.
- Status updates of eARC connection.
- Transmit audio channel delay information.
- Transmit eARC channel audio format compatibility information.

eARC TX DMAC

The DMAC supports both ARC and eARC functions.

In ARC mode, normal SPDIF signals can be transmitted.

In the eARC mode, after the audio data is taken out from the DDR, the error correction processing can be performed according to the register configuration; after the bi_phase encoding, the falling_edge modulation is also required.

In eARC mode, data can be transmitted via user bit.

In the eARC mode, the mute function is supported. You can manually turn Mute on or off. You can also Mute N blocks and then reset them to resume transmission or hold bus to switch audio formats.

A piece of invalid 01 data will be output before the transmission starts, to reduce the noise caused by the sudden change of the analog voltage.

Amlogic Proprietary and Confidential
Copyright © Amlogic. All rights reserved.

11.3.5.2 Register Description

11.3.5.2.1 EARC TX CMDC Registers

Baseaddr : 0xfe333000 + offset*4

Table 11-93 EARC_TX_CMDC_TOP_CTRL0 0x30

Bit(s)	R/W	Default	Name
31	RW	0	idle2_int 1: enable
30	RW	0	idle1_int 1: enable
29	RW	0	disc2_int 1: enable
28	RW	0	disc1_int 1: enable
27	RW	0	earc_int 1: enable
26	RW	0	hb_status_int 1: enable
25	RW	0	losthb_int 1: enable
24	RW	0	timeout_int 1: enable
23	RW	0	status_ch_int 1: enable
22	RW	0	int_recv_finished 1: enable
21	RW	0	int_rdata 1: enable
20	RW	0	int_recv_nack 1: enable
19	RW	0	int_recv_norsp 1: enable
18	RW	0	int_recv_unexp 1: enable
17	RW	0	int_recv_data 1: enable
16	RW	0	int_recv_ack 1: enable
15	RW	0	int_recv_ecc_err 1: enable
14	RW	0	int_recv_packet 1: enable
13:0	RW		reserved 1: enable

Table 11-94 EARC_TX_CMDC_TOP_CTRL1 0x31

Bit(s)	R/W	Default	Name
31:0	RW		cmdc_top_ctrl1 0

Table 11-95 EARC_TX_CMDC_TOP_CTRL2 0x32

Bit(s)	R/W	Default	Name
31	RW	0	reset_idle2_int 1: enable
30	RW	0	reset_idle1_int 1: enable
29	RW	0	reset_disc2_int 1: enable
28	RW	0	reset_disc1_int 1: enable
27	RW	0	reset_earc_int 1: enable

Amlogic Proprietary and Confidential
Copyright © Amlogic. All rights reserved.

Bit(s)	R/W	Default	Name
26	RW	0	reset_hb_status_int 1: enable
25	RW	0	reset_losthb_int 1: enable
24	RW	0	reset_timeout_int 1: enable
23	RW	0	reset_status_ch_int 1: enable
22	RW	0	reset_int_recv_finished 1: enable
21	RW	0	reset_int_rdata 1: enable
20	RW	0	reset_int_recv_nack 1: enable
19	RW	0	reset_int_recv_norsp 1: enable
18	RW	0	reset_int_recv_unexp 1: enable
17	RW	0	reset_int_recv_data 1: enable
16	RW	0	reset_int_recv_ack 1: enable
15	RW	0	reset_int_recv_ecc_err 1: enable
14	RW	0	reset_int_recv_packet 1: enable
13:00	RW		reserved

Table 11-96 EARC_TX_CMDC_TIMER_CTRL0 0x33

Bit(s)	R/W	Default	Name
31:0	RW		cmdc_timer_ctrl0 0

Table 11-97 EARC_TX_CMDC_TIMER_CTRL1 0x34

Bit(s)	R/W	Default	Name
31:0	RW		cmdc_timer_ctrl1 0

Table 11-98 EARC_TX_CMDC_TIMER_CTRL2 0x35

Bit(s)	R/W	Default	Name
31:0	RW		cmdc_timer_ctrl2 0

Table 11-99 EARC_TX_CMDC_TIMER_CTRL3 0x36

Bit(s)	R/W	Default	Name
31:0	RW		cmdc_timer_ctrl3 0

Table 11-100 EARC_TX_CMDC_VSM_CTRL0 0x37

Bit(s)	R/W	Default	Name
31	RW	0	sw_state_update
30:28	RW	0	sw_state

Amlogic Proprietary and Confidential
Copyright © Amlogic. All rights reserved.

Bit(s)	R/W	Default	Name
27	RW	0	arc_initiated
26	RW	0	arc_terminated
25	RW	1	arc_enable
24	RW	0	man_hpd
23:22	RW	0	hpd_sel
21:20	RW	0	hpd_sel_earc
19	RW	0	comma_cnt_rst
18	RW	0	timeout_status_rst
17	RW	0	losthb_status_rst
16	RW	0	force_rst
15	RW	0	auto_state_en
14	RW	0	cmdc_state_en
13	RW	0	noack_repeat_en

Table 11-101 EARC_TX_CMDC_VSM_CTRL1 0x38

Bit(s)	R/W	Default	Name
8	RW	0	cntl_hpd_sel 0:sel hd_hpd,1:sel hdmirx_hpd
7:0	RW	0	comma_cnt_th should bigger than 3 and small than 10

Table 11-102 EARC_TX_CMDC_VSM_CTRL2 0x39

Bit(s)	R/W	Default	Name
11:8	RW		reserved disc1 hpd_val timing
7	RW	0	reg_soft_rst disc1 hpd_val timing
6:4	RW	0	time_sel disc1 hpd_val timing
3:2	RW	0	soft_rst_sel disc1 hpd_val timing
1:0	RW	0	enable_ctrl disc1 hpd_val timing

Table 11-103 EARC_TX_CMDC_VSM_CTRL3 0x3a

Bit(s)	R/W	Default	Name
11:8	RW		reserved disc2 heartbeat act timing
7	RW	0	reg_soft_rst

Amlogic Proprietary and Confidential
Copyright © Amlogic. All rights reserved.

Bit(s)	R/W	Default	Name
			disc2 heartbeat act timing
6:4	RW	0	time_sel disc2 heartbeat act timing
3:2	RW	0	soft_rst_sel disc2 heartbeat act timing
1:0	RW	0	enable_ctrl disc2 heartbeat act timing

Table 11-104 EARC_TX_CMDC_VSM_CTRL4 0x3b

Bit(s)	R/W	Default	Name
31:12	RW	0	max_count_th in disc2, no heartbeat ack timing
11:8	RW		reserved
7	RW	0	reg_soft_rst in disc2, no heartbeat ack timing
6:4	RW	0	time_sel in disc2, no heartbeat ack timing
3:2	RW	0	soft_rst_sel in disc2, no heartbeat ack timing
1:0	RW	0	enable_ctrl in disc2, no heartbeat ack timing

Table 11-105 EARC_TX_CMDC_VSM_CTRL5 0x3c

Bit(s)	R/W	Default	Name
31:12	RW	0	max_count_th in disc1 and disc2 timing out
11:8	RW		reserved
7	RW	0	reg_soft_rst in disc1 and disc2 timing out
6:4	RW	0	time_sel in disc1 and disc2 timing out
3:2	RW	0	soft_rst_sel in disc1 and disc2 timing out
1:0	RW	0	enable_ctrl in disc1 and disc2 timing out

Table 11-106 EARC_TX_CMDC_VSM_CTRL6 0x3d

Bit(s)	R/W	Default	Name
11:8	RW		reserved
7	RW	0	reg_soft_rst in earc heartbeat act timing

Amlogic Proprietary and Confidential
Copyright © Amlogic. All rights reserved.

Bit(s)	R/W	Default	Name
6:4	RW	0	time_sel in earc heartbeat act timing
3:2	RW	0	soft_rst_sel in earc heartbeat act timing
1:0	RW	0	enable_ctrl in earc heartbeat act timing

Table 11-107 EARC_TX_CMDC_VSM_CTRL7 0x3e

Bit(s)	R/W	Default	Name
15:8	RW	0	status_soft_val in earc heartbeat det timing
7	RW	0	reg_soft_rst in earc heartbeat det timing
6	RW	0	status_rst in earc heartbeat det timing
5:4	RW		reserved
3:2	RW	0	soft_rst_sel in earc heartbeat det timing
1:0	RW	0	enable_ctrl in earc heartbeat det timing

Table 11-108 EARC_TX_CMDC_VSM_CTRL8 0x3f

Bit(s)	R/W	Default	Name
31:0	RW	0	cmdc_vsm_ctrl8

Table 11-109 EARC_TX_CMDC_VSM_CTRL9 0x41

Bit(s)	R/W	Default	Name
31:0	RW	0	cmdc_vsm_ctrl9

Table 11-110 EARC_TX_CMDC_SENDER_CTRL0 0x42

Bit(s)	R/W	Default	Name
31:2		0	sender_ctrl0
1		1	hb_chg_conf_auto
0		0	hb_chg_auto

Amlogic Proprietary and Confidential
Copyright © Amlogic. All rights reserved.

Table 11-111 EARC_TX_CMDC_PACKET_CTRL0 0x43

Bit(s)	R/W	Default	Name
31	RW	0	packet_mode_enable packet control
30	RW	0	free_enable packet control
29	RW	0	soft_rst packet control
28:24	RW	0	tx_ready_threshold packet control
23:20	RW		reserved
19:8	RW	0	send_pre_threshold packet control
5	RW	0	state_auto_en packet control
4	RW	0	sw_state_update_en packet control

Table 11-112 EARC_TX_CMDC_PACKET_CTRL1 0x44

Bit(s)	R/W	Default	Name
31	RW	0	ecc_endian send
30	RW	0	pre_start_value send
29:21	RW		reserved
20:16	RW	0	post_threshold send
15:14	RW		reserved
13:8	RW	0	pre_threshold

Table 11-113 EARC_TX_CMDC_PACKET_CTRL2 0x45

Bit(s)	R/W	Default	Name
31:0	RW	0	pre_flag

Table 11-114 EARC_TX_CMDC_PACKET_CTRL3 0x46

Bit(s)	R/W	Default	Name
31	RW	0	recv_en
30	RW	0	recv_parity_mask
29	RW	0	recv_timeout_en
28	RW	0	bch_ecc_en

Amlogic Proprietary and Confidential
Copyright © Amlogic. All rights reserved.

Bit(s)	R/W	Default	Name
27:16	RW		reserved
15:0	RW	0	recv_timeout_threshold

Table 11-115 EARC_TX_CMDC_PACKET_CTRL4 0x47

Bit(s)	R/W	Default	Name
31:20	RW		reserved
19:0	RW	0	recv_packet_head

Table 11-116 EARC_TX_CMDC_PACKET_CTRL5 0x48

Bit(s)	R/W	Default	Name
31:20	RW		reserved
19:0	RW	0	recv_packet_head_mask

Table 11-117 EARC_TX_CMDC_PACKET_CTRL6 0x49

Bit(s)	R/W	Default	Name
31:20	RW	0	recv_pre_threshold packet control
19:7	RW		reserved
6	RW	0	recv_finished_int
5	RW	0	recv_ecc_err_int
4	RW	0	recv_ack_int
3	RW	0	recv_data_int
2	RW	0	recv_unexp_int
1	RW	0	recv_norsp_int
0	RW	0	recv_nack_int

Table 11-118 EARC_TX_CMDC_BIPHASE_CTRL0 0x4a

Bit(s)	R/W	Default	Name
31:24	RW		reserved
23:16	RW	0	ack delay threshold
15:10	RW		reserved
9	RW	0	send_ack_en
8	RW	0	sq_val_en
7	RW	0	biphase_send_soft_rst
6	RW	0	comma_soft_rst

Amlogic Proprietary and Confidential
Copyright © Amlogic. All rights reserved.

Bit(s)	R/W	Default	Name
5	RW	0	fifo_rst
4	RW	0	receiver_no_sender
3	RW	0	sender_free
2	RW	0	receiver_send
1	RW	0	receiver_earc
0	RW	0	receiver_free

Table 11-119 EARC_TX_CMDC_BIPHASE_CTRL1 0x4b

Bit(s)	R/W	Default	Name
31:16	RW		reserved
15	RW	0	ack_enable send
14:8	RW		reserved
7:0	RW	0	wait_threshold before ack send

Table 11-120 EARC_TX_CMDC_BIPHASE_CTRL2 0x4c

Bit(s)	R/W	Default	Name
31	RW	0	comma_detection_enable comma detection
30	RW	0	manual_reset_enable comma detection
29	RW	0	manual_reset_value comma detection
28:16	RW		reserved
15:0	RW	0	comma_detection_threshold

Table 11-121 EARC_TX_CMDC_BIPHASE_CTRL3 0x4d

Bit(s)	R/W	Default	Name
31:0	RW	0	cmdc_biphase_ctrl3

Table 11-122 EARC_TX_CMDC_DEVICE_ID_CTRL 0x4e

Bit(s)	R/W	Default	Name
31	RW	0	apb_write apb bus wr/read
30	RW	0	apb_read apb bus wr/read
29	RW	0	apb_rw_done apb bus wr/read

Amlogic Proprietary and Confidential
Copyright © Amlogic. All rights reserved.

Bit(s)	R/W	Default	Name
28	RW	0	apb_rw_reset apb bus wr/read
27:17	RW		reserved
16	RW	1	hpb_rst_enable hpd rst enable
15:8	RW	0	apb_rwid apb bus wr/read
7:0	RW	0	apbrw_start_addr apb bus wr/read

Table 11-123 EARC_TX_CMDC_DEVICE_WDATA 0x4f

Bit(s)	R/W	Default	Name
31:8	RW		reserved
7:0	RW	0	apb_write_data apb bus wr/read

Table 11-124 EARC_TX_CMDC_DEVICE_RDATA 0x50

Bit(s)	R/W	Default	Name
31:8	RW		reserved
7:0	RW	0	apb_read_data apb bus wr/read

Table 11-125 EARC_TX_CMDC_MASTER_CTRL 0x51

Bit(s)	R/W	Default	Name
31	RW	0	master_cmd_rw 1 write 0 read
30	RW	0	master_hb_ignore 0:wait hb issued before pkt cmd, 1: pkt cmd issued immediately
29	RW	0	master_idle master status
28	RW	0	master_cmd_soft_rst
27:24	RW	0	hb_cmd_cal_th
23:16	RW	0	master_cmd_count cmd count -1
15:8	RW	0	master_cmd_id

Table 11-126 EARC_TX_ANA_CTRL0 0x52

Bit(s)	R/W	Default	Name
31:0	RW		reg_earctx_ana_ctrl0

Amlogic Proprietary and Confidential
Copyright © Amlogic. All rights reserved.

Table 11-127 EARC_TX_ANA_CTRL1 0x53

Bit(s)	R/W	Default	Name
31:0	RW		reg_earctx_ana_ctrl1 0

Table 11-128 EARC_TX_ANA_CTRL2 0x54

Bit(s)	R/W	Default	Name
31:0	RW		reg_earctx_ana_ctrl2 0

Table 11-129 EARC_TX_ANA_CTRL3 0x55

Bit(s)	R/W	Default	Name
31:0	RW		reg_earctx_ana_ctrl3 0

Table 11-130 EARC_TX_ANA_CTRL4 0x56

Bit(s)	R/W	Default	Name
31:0	RW		reg_earctx_ana_ctrl4 0

Table 11-131 EARC_TX_ANA_CTRL5 0x57

Bit(s)	R/W	Default	Name
31:0	RW		reg_earctx_ana_ctrl5 0

Table 11-132 EARC_TX_ANA_STAT0 0x58

Bit(s)	R/W	Default	Name
31:0	RO		ro_ANA_status0 0

Table 11-133 EARC_TX_CMDC_STATUS0 0x59

Bit(s)	R/W	Default	Name
31:0	RO		ro_cmdc_status0 0

Table 11-134 EARC_TX_CMDC_STATUS1 0x5a

Bit(s)	R/W	Default	Name
31:0	RO		ro_cmdc_status1 0

Amlogic Proprietary and Confidential
Copyright © Amlogic. All rights reserved.

Table 11-135 EARC_TX_CMDC_STATUS2 0x5b

Bit(s)	R/W	Default	Name
31:0	RO		ro_cmdc_status2 0

Table 11-136 EARC_TX_CMDC_STATUS3 0x5c

Bit(s)	R/W	Default	Name
31:0	RO		ro_cmdc_status3 0

Table 11-137 EARC_TX_CMDC_STATUS4 0x5d

Bit(s)	R/W	Default	Name
31:0	RO		ro_cmdc_status4 0

Table 11-138 EARC_TX_CMDC_STATUS5 0x5e

Bit(s)	R/W	Default	Name
31:0	RO		ro_cmdc_status5 0

Table 11-139 EARC_TX_CMDC_STATUS6 0x5f

Bit(s)	R/W	Default	Name
31	RO		ro_idle2_int
30	RO		ro_idle1_int
29	RO		ro_disc2_int
28	RO		ro_disc1_int
27	RO		ro_earc_int
26	RO		ro_hb_status_int
25	RO		ro_losthb_int
24	RO		ro_timeout_int
23	RO		ro_status_ch_int
22	RO		ro_int_recv_finished
21	RO		ro_int_rdata
20	RO		ro_int_recv_nack
19	RO		ro_int_recv_norsp
18	RO		ro_int_recv_unexp
17	RO		ro_int_recv_data

Amlogic Proprietary and Confidential
Copyright © Amlogic. All rights reserved.

Bit(s)	R/W	Default	Name
16	RO		ro_int_recv_ack
15	RO		ro_int_recv_ecc_err
14	RO		ro_int_recv_packet
13:00			reserved

11.3.5.2.2 EARC TX DMAC Registers

Baseaddr : 0xfe333400 + offset*4

Table 11-140 EARCTX_DMAC_TOP_CTRL0 0x00

Bit(s)	R/W	default	Description
31	RW	0	reserved
30	RW	0	dmac top soft reset
29:26	RW	0	reserved
25:24	RW	0	dmac debug bus sel 3: fe_debug 2: err_debug
23:21	RW	0	reserved
20	RW	0	reg_slow_sync_scan_reg
19	RW	0	reg_fe_sf_scan_reg
18	RW	0	reg_fe_slow_sync_scan_reg
17	RW	0	reg_top_sf_scan_reg
16	RW	0	reg_top_slow_sync_scan_reg
15:4	RW	0	reserved
3	RW	0	spdif_tx_en force enable
2	RW	0	spdif_tx_en force value
1	RW	0	dmac_tx_en force enable
0	RW	0	dmac_tx_en force value

Table 11-141 EARCTX_MUTE_VAL 0x01

Bit(s)	R/W	default	Description
31:0	RW	0	when biahpase encode mute,the channel value,with reg_mute_l/reg_mute_r

Table 11-142 EARCTX_SPDIFOUT_GAIN0 0x02

Bit(s)	R/W	default	Description
31:24	RW	0	channel 3 gain
23:16	RW	0	channel 2 gain
15:8	RW	0	channel 1 gain
7:0	RW	0	channel 0 gain

Amlogic Proprietary and Confidential
Copyright © Amlogic. All rights reserved.

Table 11-143 EARCTX_SPDIFOUT_GAIN1 0x03

Bit(s)	R/W	default	Description
31:24	RW	0	channel 7 gain
23:16	RW	0	channel 6 gain
15:8	RW	0	channel 5 gain
7:0	RW	0	channel 4 gain

Table 11-144 EARCTX_SPDIFOUT_GAIN2 0x1e

Bit(s)	R/W	default	Description
31:24	RW	0	channel 11 gain
23:16	RW	0	channel 10 gain
15:8	RW	0	channel 9 gain
7:0	RW	0	channel 8 gain

Table 11-145 EARCTX_SPDIFOUT_GAIN3 0x1f

Bit(s)	R/W	default	Description
31:24	RW	0	channel 15 gain
23:16	RW	0	channel 14 gain
15:8	RW	0	channel 13 gain
7:0	RW	0	channel 12 gain

Table 11-146 EARCTX_SPDIFOUT_GAIN4 0x20

Bit(s)	R/W	default	Description
31:16	RW	0	reserved
15:0	RW	0	Reqfrddr :reg_gain_en

Table 11-147 EARCTX_SPDIFOUT_GAIN5 0x21

Bit(s)	R/W	default	Description
31	RW	0	Reqfrddr :reg_gain_step_chg
30:26	RW	0	reserved
25:24	RW	0	Reqfrddr :reg_gain_val_sel
23:16	RW	0	Reqfrddr :reg_gain_step
15:0	RW	0	Reqfrddr :reg_gain_updt_timer

Amlogic Proprietary and Confidential
Copyright © Amlogic. All rights reserved.

Table 11-148 EARCTX_SPDIFOUT_CTRL0 0x04

Bit(s)	R/W	default	Description
31	RW	0	biphase work start,pluse
30	RW	0	biphase work clear,pluse
29	RW	0	afifo out reset
28	RW	0	afifo in reset
27	RW	0	add delay to mathc TDM out when share buff
26	RW	0	user Bit select : 0 from reg_userdata_set 1 from data[29]
25	RW	0	value
24	RW	0	0 :from reg_chstst 1 : from data[30]
23	RW	0	reserved
22	RW	0	r channel mute ,with reg_mute_val
21	RW	0	l channel mute ,with reg_mute_val
20	RW	0	0 data from 31Bit 1 data from 27bit
19	RW	0	0 lsb first 1 msb first
18	RW	0	biphase encode valid Bit value sel : 0 from data 1 from reg_valid_set
17	RW	0	biphase encode valid Bit value
16	RW	0	when c_mute_hold_last_err_corrt valid,clear work enable, initial biphase encode
15	RW	0	Req_frddr_rst
14:12	RW	0	reserved
0	RW	0	Bit 0 is initial parity value

Table 11-149 EARCTX_SPDIFOUT_CTRL1 0x05

Bit(s)	R/W	default	Description
31	RW	0	set 1 select eq_drc data
30	RW	0	Keep_req_ddr_init
30:28	RW	0	reserved
26:24	RW	0	from ddr selet
23:16	RW	0	wait some time when enable set to 1
15:13	RW	0	reserved
12:8	RW	0	msb position of data
7	RW	0	set 1 no need ack from frddr to transmit channel status
6:4	RW	0	reg_frddr_type 0: 8bit 1:16bit 2:16bit with shift 3:32bit 4 32bit with shift
3	RW	0	reserved
2	RW	0	Stat_sel: 1 cur_gain_val 0 debug singles
1:0	RW	0	reserved

Amlogic Proprietary and Confidential
Copyright © Amlogic. All rights reserved.

Table 11-150 EARCTX_SPDIFOUT_CTRL2 0x1d

Bit(s)	R/W	default	Description
31:24	RW	0	reserved
23:16	RW	0	Req_frddr : reg_clr_by_init
15:0	RW	0	Reg_mask

Table 11-151 EARCTX_SPDIFOUT_PREAMB 0x06

Bit(s)	R/W	default	Description
31	RW	0	user 8'b11101000 1 user 7:0
30	RW	0	user 8'b11100100 1 user 15:8
29	RW	0	user 8'b11100010 1 user 23:16
28:24	RW	0	reserved
23:16	RW	0	value
15:8	RW	0	value
7:0	RW	0	value

Table 11-152 EARCTX_SPDIFOUT_SWAP 0x07

Bit(s)	R/W	default	Description
31:16	RW	0	hold start cnt ,valid when reg_hold_for_tdm set 1
15	RW	0	send 01 sequence some times after initial done from frddr set
14:0	RW	0	send 01 sequence time ,valid when reg_init_send_en set 1

Table 11-153 EARCTX_ERR_CORRT_CTRL0 0x08

Bit(s)	R/W	default	Description
31:24	RW	0	reserved
23	RW	0	bch input data generate in 24bit data reverse
22	RW	0	bch output ecc reverse
21	RW	0	bch output data reverse
20	RW	0	bch output ecc position
19:17	RW	0	reserved
16	RW	0	fifo initial
15	RW	0	r channel select[3]
14	RW	0	l channel select[3]
13:12	RW	0	gain x 1/2/4/8
11	RW	0	l/r mix
10:8	RW	0	r channel select[2:0]
7	RW	0	reserved

Amlogic Proprietary and Confidential
Copyright © Amlogic. All rights reserved.

Bit(s)	R/W	default	Description
6:4	RW	0	l channel select[2:0]
3:0	RW	0	iu transmit interval

Table 11-154 EARCTX_ERR_CORRT_CTRL1 0x09

Bit(s)	R/W	default	Description
31	RW	0	iu data write enable,pluse,auto clr in reg.v
30:8	RW	0	reserved
7:0	RW	0	iu transmite data

Table 11-155 EARCTX_ERR_CORRT_CTRL2 0x0a

Bit(s)	R/W	default	Description
31	RW	0	mute clear,pluse,auto clr in reg.v
30	RW	0	mute start,pluse,auto clr in reg.v
29:28	RW	0	reserved
27:16	RW	0	mute block number
15:8	RW	0	mute bit at channel statue which bit
7:3	RW	0	reserved
2	RW	0	mute data sel: 0 data 1 reg_mute_data_value
1:0	RW	0	0:always mute 1:mute block number and dis mute 2:mute bolck number and hold bus

Table 11-156 EARCTX_ERR_CORRT_CTRL3 0x0b

Bit(s)	R/W	default	Description
31:30	RW	0	reserved
29	RW	0	bch generate enable
28:24	RW	0	bch data msb position in audio data
23:0	RW	0	mute value,only for audio data part

Table 11-157 EARCTX_ERR_CORRT_CTRL4 0x0c

Bit(s)	R/W	default	Description
31	RW	0	user Bit lr swap
30	RW	0	l/r channel use same Bit user bit
29:25	RW	0	audio data msb position in input data
24	RW	0	audio data msb/lsb
23	RW	0	user Bit value
22	RW	0	valid Bit value

Amlogic Proprietary and Confidential
Copyright © Amlogic. All rights reserved.

Bit(s)	R/W	default	Description
21	RW	0	data sel: 0 data 1 reg_mute_data_value
20:19	RW	0	userBit sel: 0 data 1 reg_value 2 fifo data
18	RW	0	validBit sel: 0 data 1 reg_value
17	RW	0	chanel status sel: 0 data 1 reg_value
16	RW	0	fifo_less_thd irq enable
15:8	RW	0	start transmit iu after fifo level greater than this value
7:0	RW	0	generate irq, when fifo level less than this value

Table 11-158 EARCTX_SPDIFOUT_CHSTS0 0x0e

Bit(s)	R/W	default	Description
31:0	RW	0	channel A status[31:0]

Table 11-159 EARCTX_SPDIFOUT_CHSTS1 0x0f

Bit(s)	R/W	default	Description
31:0	RW	0	channel A status[63:32]

Table 11-160 EARCTX_SPDIFOUT_CHSTS2 0x10

Bit(s)	R/W	default	Description
31:0	RW	0	channel A status[95:64]

Table 11-161 EARCTX_SPDIFOUT_CHSTS3 0x11

Bit(s)	R/W	default	Description
31:0	RW	0	channel A status[127:96]

Table 11-162 EARCTX_SPDIFOUT_CHSTS4 0x12

Bit(s)	R/W	default	Description
31:0	RW	0	channel A status[159:128]

Table 11-163 EARCTX_SPDIFOUT_CHSTS5 0x13

Bit(s)	R/W	default	Description
31:0	RW	0	channel A status[191:160]

Amlogic Proprietary and Confidential
Copyright © Amlogic. All rights reserved.

Table 11-164 EARCTX_SPDIFOUT_CHSTS6 0x14

Bit(s)	R/W	default	Description
31:0	RW	0	channel B status[31:0]

Table 11-165 EARCTX_SPDIFOUT_CHSTS7 0x15

Bit(s)	R/W	default	Description
31:0	RW	0	channel B status[63:32]

Table 11-166 EARCTX_SPDIFOUT_CHSTS8 0x16

Bit(s)	R/W	default	Description
31:0	RW	0	channel B status[95:64]

Table 11-167 EARCTX_SPDIFOUT_CHSTS9 0x17

Bit(s)	R/W	default	Description
31:0	RW	0	channel B status[127:96]

Table 11-168 EARCTX_SPDIFOUT_CHSTSA 0x18

Bit(s)	R/W	default	Description
31:0	RW	0	channel B status[159:128]

Table 11-169 EARCTX_SPDIFOUT_CHSTSB 0x19

Bit(s)	R/W	default	Description
31:0	RW	0	channel B status[191:160]

Table 11-170 EARCTX_FE_CTRL0 0x1a

Bit(s)	R/W	default	Description
31	RW	0	reserved
30	RW	0	falling edge modulation work enable
29	RW	0	fe out invent
28	RW	0	hold min time enable
27	RW	0	0 auto clear hold at next valid 1 clear hold with reg_mute_hold_clr
26:24	RW	0	hold min time tick select
23:0	RW	0	hold min time

11.3.5.2.3 EARC TX Top Registers

Baseaddr : 0xfe333600 + offset*4

Amlogic Proprietary and Confidential
Copyright © Amlogic. All rights reserved.

Table 11-171 EARCTX_TOP_CTRL0 0x00

Bit(s)	R/W	default	Description
31:18	RW	0	reserved
17:16	RW	0	debug mux,3:analog debug 2:dmac debug 1:cmdc debug
15	RW	0	reg_slow_sync_scan_reg
14:12	RW	0	reserved
11	RW	0	hdmi_hpd invent
10	RW	0	hdmi_hpd mux = 3,register value
9:8	RW	0	hdmi_hpd mux ,3:register value 2:hdmi hdp2 1:hdmi hdp1 0:hdmi hdp0
7	RW	0	earctx_hd_hdp invent
6	RW	0	earctx_hd_hdp mux = 3,register value
5:4	RW	0	earctx_hd_hdp mux,3:register value 2:gpiow_5 1:gpiow_9 0:gpiow_1
3:2	RW	0	reserved
1	RW	0	force mode enale
0	RW	0	force mode value

Table 11-172 EARCTX_DMAC_INT_MASK 0x01

Bit(s)	R/W	default	Description
31:6	RW	0	reserved
5:0	RW	0	dmac int mask

Table 11-173 EARCTX_DMAC_INT_PENDING 0x02

Bit(s)	R/W	default	Description
31:5	RO	0	reserved
4:0	RO	0	dmac int pending,4 :earctx_fe_modulation c_hold_clr 3 :earctx_fe_modulation c_hold_start 2 :earctx_err_correct c_fifo_thd_less_pass 1 :earctx_err_correct r_fifo_overflow_set 0 :earctx_err_correct c_fifo_empty_set

Table 11-174 EARCTX_CMDC_INT_MASK 0x03

Bit(s)	R/W	default	Description
31:18	RW	0	reserved
17:0	RW	0	cmdc int mask

Amlogic Proprietary and Confidential
Copyright © Amlogic. All rights reserved.

Table 11-175 EARCTX_CMDC_INT_PENDING 0x04

Bit(s)	R/W	default	Description
31:18	RO	0	reserved
17:0	RO	0	cmdc int pending,17 :hpd_high_int 16 :hpd_low_int 15 :idle2_int 14 :idle1_int 13 : disc2_int 12 :disc1_int 11 :earc_int 10 :hb_status_int 9 :losthb_int 8 :timeout_int 7 :status_ch_int 6 :int_recv_finished 5 :int_recv_nack 4 :int_recv_norsp 3 :int_ recv_unexp 2 :int_recv_data 1 :int_recv_ack 0 :int_recv_ecc_err

Table 11-176 EARCTX_ANA_CTRL0 0x05

Bit(s)	R/W	default	Description
31	RW	0	earctx_en_d2a
30	RW	0	earctx_cmdcrx_vrefon_sel
29:28	RW	0	earctx_cmdcrx_rcfilter_sel
27	RW	0	reserved
26:24	RW	0	earctx_cmdcrx_hystrim
23:20	RW	0	earctx_idr_trim
19:15	RW	0	reserved
16:12	RW	0	earctx_rterm_trim
11	RW	0	reserved
10:8	RW	0	earctx_dmac_slew_con
7:5	RW	0	earctx_cmdctx_ack_hystrim
4:0	RW	0	earctx_cmdctx_ack_reftrim

Table 11-177 EARCTX_ANA_CTRL1 0x06

Bit(s)	R/W	default	Description
23:16	RW	0	earctx_reg
15:14	RW	0	reserved
13	RW	0	earctx_arctx_comsel
12	RW	0	earctx_idc_sel
11	RW	0	earctx_arctx_selc
10	RW	0	earctx_arctx_seli
9	RW	0	earctx_cmdcrx_dat_invsel
8:4	RW	0	earctx_cmdcrx_reftrim
3:0	RW	0	earctx_cmdcrx_sqcon

11.4 DSP

Amlogic Proprietary and Confidential
Copyright © Amlogic. All rights reserved.

11.4.1 DSP_TOP

- DSP_TOP contains a DSP_CORE_A and DSP_CORE_B.
- Each DSP_CORE contains 2 clocks, one SYSCLK and one DSP_CLK;
- Each DSP_CORE contains 2 resets, one for the debug part, and one for others;
- SYSCLK and reset for debug of the two DSP_COREs are shared; DSP_CLK and reset for others are two independent signals;
- Each DSP_CORE has a separate APB bus for controlling and observing the contents of the DSP;
- Each DSP_IP contains 21 external irqs, which are generated by IRQ_CTRL.
- Each DSP_IP has 2 faultERR outputs, which will be converted into irq and sent out;
- Each DSP_CORE contains a set of RDFIFOs and a set of WRFIFOs that can be used to transmit data, especially between two DSP_COREs;
- The AXI bus has three remap operations, corresponding to three kinds of step sizes;

Amlogic Proprietary and Confidential
Copyright © Amlogic. All rights reserved.

Figure 11-14 DSP Path

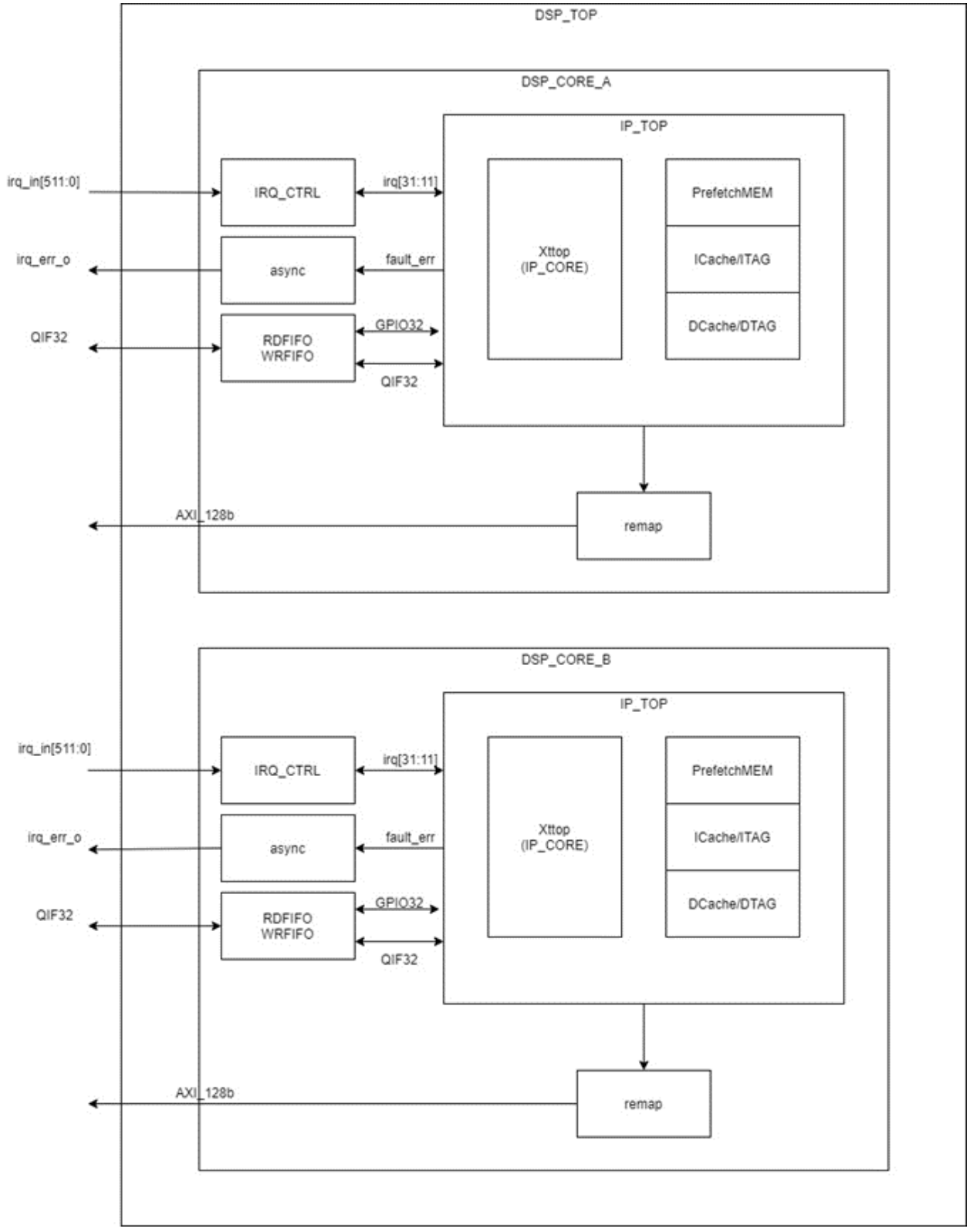

11.4.2 DSP IRQ CTRL

Each IP_TOP is configured with 32 irq sources, IRQ0~IRQ10 are IP's internal IRQ, and IRQ11~IRQ31 are from external.

Amlogic Proprietary and Confidential
Copyright © Amlogic. All rights reserved.

For the 21 external irq sources:

- Select one from the 512 system level interrupt.
- The IRQ31 can be switched to audio_irq. This audio IRQ has its own 20bit enable and statistic read only registers. And 20 bit clr_sts registers. (these audio IRQ are also in the 512 system level interrupt).

Figure 11-15 DSP IRQ CTRL Diagram

Table 11-178 DSP IRQ CTRL

Interrupt NO.	Type	Level	Description
0	sw	1	DSP IP Internal
1	sw	1	DSP IP Internal
2	sw	2	DSP IP Internal
3	sw	3	DSP IP Internal
4	sw	3	DSP IP Internal
5	sw	4	DSP IP Internal
6	writeerr	3	DSP IP Internal
7	timer.0	1	DSP IP Internal
8	timer.1	3	DSP IP Internal
9	timer.2	4	DSP IP Internal
10	Profiling	1	DSP IP Internal
11	edge	1	External src 0
12	edge	1	External src 1
13	edge	1	External src 2
14	edge	2	External src 3
15	edge	2	External src 4
16	edge	2	External src 5
17	edge	2	External src 6
18	edge	2	External src 7
19	edge	2	External src 8
20	edge	2	External src 9
21	edge	2	External src 10
22	edge	2	External src 11
23	edge	2	External src 12
24	edge	2	External src 13
25	edge	3	External src 14
26	edge	3	External src 15
27	edge	3	External src 16

Amlogic Proprietary and Confidential
Copyright © Amlogic. All rights reserved.

Interrupt NO.	Type	Level	Description
28	edge	3	External src 17
29	edge	4	External src 18
30	edge	2	External src 19
31	edge	3	External src 20 or External audio irq

There are also two irq outputs, which are the fault_error and fault_double_error interfaces of the IP_TOP output.

11.4.3 GPIO 32/QIF 32 Interface

The DSP comes in with GPIO32/QIF32 interface for transmitting data, you can use them to perform slow data transfer between 2 CPUs and 2 DSPs.

There're two kinds of solutions, as shown in the following figure.

- (A) Black connections, CPUs and DSPs use the APB register to read and write the register access FIFO, and the DSPs use the QIF32 interfaces to access the FIFO to complete the data transmission.
- (B) Red or green connections, the two DSPs complete the data transmission directly through the QIF32 interfaces.

Note

The sel of the mux is controlled by the reg, and it can also be controlled by GPIO32(via the TIE_EXPSTATE command), and the GPIO32 has a higher priority.

- TIE_EXPSTATE[7]: force_rdfifo_sel;
- TIE_EXPSTATE[5:4]: force_rdfifo_sel_val;
- TIE_EXPSTATE[3]: force_wrfifo_sel;
- TIE_EXPSTATE[1:0]: force_wrfifo_sel_val;

Figure 11-16 GPIO 32/QIF 32 Interface Transmission

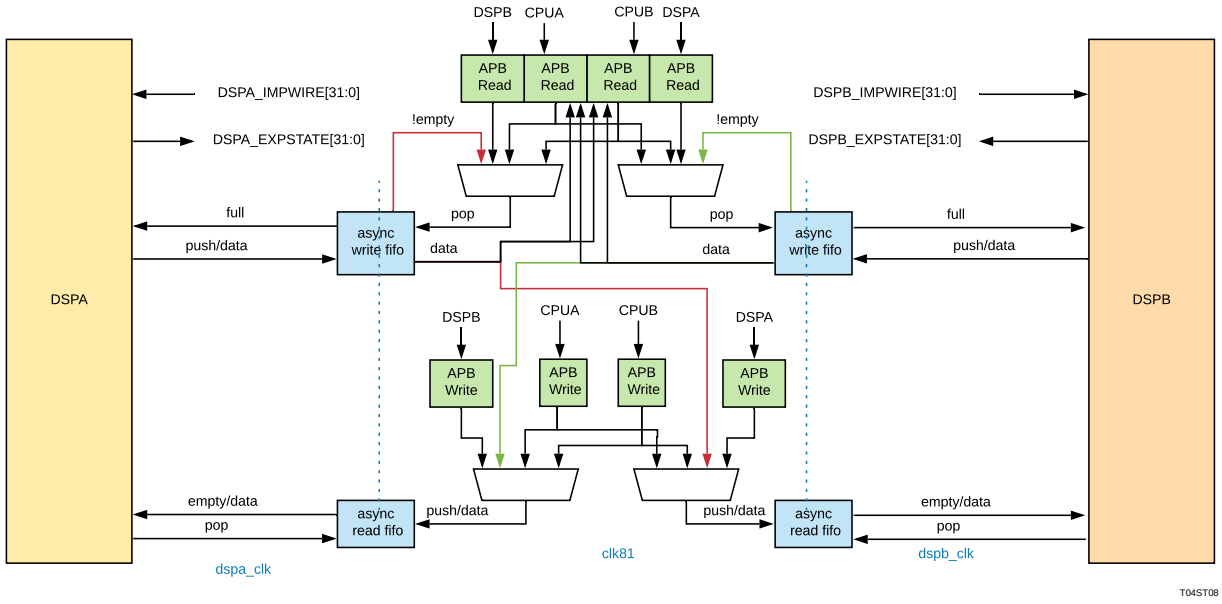

Amlogic Proprietary and Confidential
Copyright © Amlogic. All rights reserved.

11.4.4 DSP Registers

Base address for following registers: 0xfe340000

Table 11-179 DSP_CFG0 0x00

Bits	R/W	Default	Description
31	R/W	1	IP ports: DReset
30	R/W	1	IP ports: BReset
29	R/W	0	irq_clken
25:24	R/W	0	Dsp_irq_level_clr
23	R/W	0	clr_faultinfo
22	R/W	0	clr_double_irq_sts
15:0	R/W	0	IP ports: PRID

Table 11-180 DSP_IMPWIRE 0x03

Bits	R/W	Default	Description
31:0	R/W	0	IP ports: TIE_IMPWIRE

Table 11-181 DSP_IRQ_CTRL0 0x10

Bits	R/W	Default	Description
31	R/W	0	Irq20_sel: for DSP_IRQ31, select audio IRQ.
19:0	R/W	0	audio_irq_mask; for DSP_IRQ31, each bit set 1 will enable audio irq src

Table 11-182 DSP_IRQ_CTRL1 0x11

Bits	R/W	Default	Description
19:0	R/W	0	audio_irq_clr; for DSP_IRQ31, each bit set 1 will clr audio irq sts

Table 11-183 DSP_IRQ_CTRL2 0x12

Bits	R/W	Default	Description
28:20	R/W	0	irq_sel; for DSP_IRQ13, from 512 interrupt sources
18:10	R/W	0	irq_sel; for DSP_IRQ12, from 512 interrupt sources
8:0	R/W	0	irq_sel; for DSP_IRQ11, from 512 interrupt sources

Amlogic Proprietary and Confidential
Copyright © Amlogic. All rights reserved.

Table 11-184 DSP_IRQ_CTRL3 0x13

Bits	R/W	Default	Description
28:20	R/W	0	irq_sel; for DSP_IRQ16
18:10	R/W	0	irq_sel; for DSP_IRQ15
8:0	R/W	0	irq_sel; for DSP_IRQ14

Table 11-185 DSP_IRQ_CTRL4 0x14

Bits	R/W	Default	Description
28:20	R/W	0	irq_sel; for DSP_IRQ19
18:10	R/W	0	irq_sel; for DSP_IRQ18
8:0	R/W	0	irq_sel; for DSP_IRQ17

Table 11-186 DSP_IRQ_CTRL5 0x15

Bits	R/W	Default	Description
28:20	R/W	0	irq_sel; for DSP_IRQ22
18:10	R/W	0	irq_sel; for DSP_IRQ21
8:0	R/W	0	irq_sel; for DSP_IRQ20

Table 11-187 DSP_IRQ_CTRL6 0x16

Bits	R/W	Default	Description
28:20	R/W	0	irq_sel; for DSP_IRQ25
18:10	R/W	0	irq_sel; for DSP_IRQ24
8:0	R/W	0	irq_sel; for DSP_IRQ23

Table 11-188 DSP_IRQ_CTRL7 0x17

Bits	R/W	Default	Description
28:20	R/W	0	irq_sel; for DSP_IRQ28
18:10	R/W	0	irq_sel; for DSP_IRQ27
8:0	R/W	0	irq_sel; for DSP_IRQ26

Table 11-189 DSP_IRQ_CTRL8 0x18

Bits	R/W	Default	Description
28:20	R/W	0	Irq_sel: for DSP_IRQ31
18:10	R/W	0	irq_sel; for DSP_IRQ30
8:0	R/W	0	irq_sel; for DSP_IRQ29

Amlogic Proprietary and Confidential
Copyright © Amlogic. All rights reserved.

Table 11-190 DSP_IRQ_STS 0x1F

Bits	R/W	Default	Description
19:0	R	0	audio_irq_sts; for DSP_IRQ31;

Table 11-191 DSP_REMAP0 0x20

Bits	R/W	Default	Description
31:16	R/W	0	remap0_replace[31:16];
15:0	R/W	0	remap0_match[31:16]

Table 11-192 DSP_REMAP1 0x21

Bits	R/W	Default	Description
31:18	R/W	0	remap1_match[31:18]
15:2	R/W	0	remap1_replace[31:18]

Table 11-193 DSP_REMAP2 0x22

Bits	R/W	Default	Description
31:20	R/W	0	remap2_match[31:20]
15:4	R/W	0	remap2_replace[31:20]

Table 11-194 DSP_STS0 0x40

Bits	R/W	Default	Description
31:0	R/W	0	IP Ports: PFaultInfo[31:0]

Table 11-195 DSP_STS1 0x41

Bits	R/W	Default	Description
31:0	R/W	0	IP Ports: TIE_EXPSTATE

Table 11-196 DSP_STS2 0x42

Bits	R/W	Default	Description
31:0	R/W	0	reserved

Table 11-197 DSP_STS3 0x43

Bits	R/W	Default	Description
31	R/W	0	IP Ports: DoubleExceptionError
30	R/W	0	IP Ports: PFatalError
29	R/W	0	IP Ports: PFaultInfoValid

Amlogic Proprietary and Confidential
Copyright © Amlogic. All rights reserved.

Bits	R/W	Default	Description
28	R/W	0	IP Ports: XOCDMode
27	R/W	0	IP Ports: DebugMode
26	R/W	0	IP Ports: BreakInAck
25	R/W	0	IP Ports: BreakOut
24	R/W	0	IP Ports: PWaitMode

Table 11-198 DSP_STS4 0x44

Bits	R/W	Default	Description
31:0	R/W	0	PfaultInfo[63:32]

Table 11-199 DSP_STS5 0x45

Bits	R/W	Default	Description
31:0	R/W	0	reserved

Table 11-200 DSP_QIF_CTRL 0x80

Bits	R/W	Default	Description
31	R/W	0	dsp_qif_en
30	R/W	0	qif_clk_en
27	R/W	0	rdfifo_rstn_in
26	R/W	0	rdfifo_rstn_out
25	R/W	0	wrfifo_rstn_in
24	R/W	0	wrfifo_rstn_out
23	R/W	0	rdfifo_clr_ov
22	R/W	0	wrfifo_clr_ov
5:4	R/W	0	rdfifo_sel 0:reg_frcpua; 1:reg_frcpub; 2:reg_frdsp; 3:wrfifo_frdsp;
1:0	R/W	0	wrfifo_sel 0:reg_tocpua; 1:reg_tocpub; 2:reg_todsp; 3:rdfifo_todsp;

Table 11-201 DSP_QIF_STS 0x81

Bits	R/W	Default	Description
27	R	0	dsp_rdfifo_outvalid
26	R	0	dsp_rdfifo_inready

Amlogic Proprietary and Confidential
Copyright © Amlogic. All rights reserved.

Bits	R/W	Default	Description
25	R	0	dsp_rdfifo_overflow1
24	R	0	dsp_rdfifo_overflow2
20:16	R	0	dsp_rdfifo_cnt
10	R	0	dsp_wrfifo_outvalid
9	R	0	dsp_wrfifo_inready
8	R	0	dsp_wrfifo_overflow1
7	R	0	dsp_wrfifo_overflow2
4:0	R	0	dsp_wrfifo_cnt_sync

Table 11-202 DSP_WRFIFO_TOCPUA 0x82

Bits	R/W	Default	Description
31:0	R/W	0	pop one data from wrfifo when read

Table 11-203 DSP_WRFIFO_TOCPUB 0x83

Bits	R/W	Default	Description
31:0	R/W	0	pop one data from wrfifo when read

Table 11-204 DSP_WRFIFO_TODSP 0x84

Bits	R/W	Default	Description
31:0	R/W	0	pop one data from wrfifo when read

Table 11-205 DSP_RDFIFO_FRCPUA 0x88

Bits	R/W	Default	Description
31:0	R/W	0	push one data to rdfifo when write

Table 11-206 DSP_RDFIFO_FRCPUB 0x89

Bits	R/W	Default	Description
31:0	R/W	0	push one data to rdfifo when write

Table 11-207 DSP_RDFIFO_FRDSP 0x8A

Bits	R/W	Default	Description
31:0	R/W	0	push one data to rdfifo when write

Amlogic Proprietary and Confidential
Copyright © Amlogic. All rights reserved.

Table 11-208 DSP_PM_CTRL 0x90

Bits	R/W	Default	Description
1	R/W	0	Select 1T latch of Pdebugenable.
0	R/W	0	Pdebugenable. Performance counter

Table 11-209 DSP_PDEBUGDATA_STS 0x91

Bits	R/W	Default	Description
31:0	R/W	0	pdebugdata

Table 11-210 DSP_PDEBUGINST_STS 0x92

Bits	R/W	Default	Description
31:0	R/W	0	pdebuginst

Table 11-211 DSP_PDEBUGLS0STAT_STS 0x93

Bits	R/W	Default	Description
31:0	R/W	0	Pdebugls0stat

Table 11-212 DSP_PDEBUGLS1STAT_STS 0x94

Bits	R/W	Default	Description
31:0	R/W	0	Pdebugls1stat

Table 11-213 DSP_PDEBUGOUTPIF_STS 0x95

Bits	R/W	Default	Description
31:0	R/W	0	Pdebugoutpif

Table 11-214 DSP_PDEBUGPC_STS 0x96

Bits	R/W	Default	Description
31:0	R/W	0	Pdebugpc_sts

Table 11-215 DSP_PDEBUGPREFETCHL1FILL_STS 0x97

Bits	R/W	Default	Description
31:0	R/W	0	Pdebugprefetchl1fill

Amlogic Proprietary and Confidential
Copyright © Amlogic. All rights reserved.

Table 11-216 DSP_PDEBUGPREFETCHLOOKUP_STS 0x98

Bits	R/W	Default	Description
31:0	R/W	0	Pdebugprefetchlookup

Table 11-217 DSP_PDEBUGSTATUS_STS 0x99

Bits	R/W	Default	Description
31:0	R/W	0	Pdebugstatus

Table 11-218 CHIP TOP DSP related IRQ sources

IRQ NO.	IRQ source
351	reg_soft_irq[7]
350	reg_soft_irq[6]
349	reg_soft_irq[5]
348	reg_soft_irq[4]
347	reg_soft_irq[3]
346	reg_soft_irq[2]
345	reg_soft_irq[1]
344	reg_soft_irq[0]
343	1'b0
342	ddr1_phy_irq
341	ddr_phy_irq
340	eth_phy_irq_or
339	dmc1_sec_irq
338	dmc1_test_irq
337	dmc1_prot_irq
336	dmc1_mon_irq
335	dmc_sec_irq
334	dmc_test_irq
333	dmc_prot_irq
332	dmc_mon_irq
331	i2c_m_ao_b_irq
330	i2c_m_ao_a_irq
329	eth_qos_irq[9]
328	eth_qos_irq[8]
327	eth_qos_irq[7]
326	eth_qos_irq[6]

Amlogic Proprietary and Confidential
Copyright © Amlogic. All rights reserved.

IRQ NO.	IRQ source
325	eth_qos_irq[5]
324	eth_qos_irq[4]
323	eth_qos_irq[3]
322	eth_qos_irq[2]
321	eth_qos_irq[1]
320	eth_qos_irq[0]
319	mipi_isp_irq[31]
318	mipi_isp_irq[30]
317	mipi_isp_irq[29]
316	mipi_isp_irq[28]
315	mipi_isp_irq[27]
314	mipi_isp_irq[26]
313	mipi_isp_irq[25]
312	mipi_isp_irq[24]
311	mipi_isp_irq[23]
310	mipi_isp_irq[22]
309	mipi_isp_irq[21]
308	mipi_isp_irq[20]
307	mipi_isp_irq[19]
306	mipi_isp_irq[18]
305	mipi_isp_irq[17]
304	mipi_isp_irq[16]
303	mipi_isp_irq[15]
302	mipi_isp_irq[14]
301	mipi_isp_irq[13]
300	mipi_isp_irq[12]
299	mipi_isp_irq[11]
298	mipi_isp_irq[10]
297	mipi_isp_irq[9]
296	mipi_isp_irq[8]
295	mipi_isp_irq[7]
294	mipi_isp_irq[6]
293	mipi_isp_irq[5]
292	mipi_isp_irq[4]
291	mipi_isp_irq[3]

Amlogic Proprietary and Confidential
Copyright © Amlogic. All rights reserved.

IRQ NO.	IRQ source
290	mipi_isp_irq[2]
289	mipi_isp_irq[1]
288	mipi_isp_irq[0]
287	1'b0
286	1'b0
285	1'b0
284	ldim_done_int
283	venc1_vx1_int
282	venc0_vx1_int
281	usb_iddig_irq1
280	usb_vbusdig_irq1
279	a73_nIRQOUT[3]
278	a73_nIRQOUT[2]
277	a73_nIRQOUT[1]
276	a73_nIRQOUT[0]
275	a73_nFIQOUT[3]
274	a73_nFIQOUT[2]
273	a73_nFIQOUT[1]
272	a73_nFIQOUT[0]
271	1'b0
270	A73_STANDBYWFIL2
269	A73_L2FLUSHDONE
268	A73IRQ[8]
267	A73IRQ[7]
266	A73IRQ[6]
265	A73IRQ[5]
264	A73IRQ[4]
263	A73IRQ[3]
262	A73IRQ[2]
261	A73IRQ[1]
260	A73IRQ[0]
259	A73_STANDBYWFI[3]
258	A73_STANDBYWFI[2]
257	A73_STANDBYWFI[1]
256	A73_STANDBYWFI[0]
255	assist_mbox_irq_ee[3]

Amlogic Proprietary and Confidential
Copyright © Amlogic. All rights reserved.

IRQ NO.	IRQ source
254	assist_mbox_irq_ee[2]
253	assist_mbox_irq_ee[1]
252	assist_mbox_irq_ee[0]
251	mbox_irq[3]
250	mbox_irq[2]
249	mbox_irq[1]
248	mbox_irq[0]
247	nIRQOUT[3:0][3]
246	nIRQOUT[3:0][2]
245	nIRQOUT[3:0][1]
244	nIRQOUT[3:0][0]
243	nFIQOUT[3:0][3]
242	nFIQOUT[3:0][2]
241	nFIQOUT[3:0][1]
240	nFIQOUT[3:0][0]
239	mbox_irq[4]
238	STANDBYWFIL2
237	L2FLUSHDONE
236	A53IRQ[8]
235	A53IRQ[7]
234	A53IRQ[6]
233	A53IRQ[5]
232	A53IRQ[4]
231	A53IRQ[3]
230	A53IRQ[2]
229	A53IRQ[1]
228	A53IRQ[0]
227	STANDBYWFI[3]
226	STANDBYWFI[2]
225	STANDBYWFI[1]
224	STANDBYWFI[0]
223	gdc_irq
222	edptx_int_1
221	edptx_int_0
220	vpu_sec_int

Amlogic Proprietary and Confidential
Copyright © Amlogic. All rights reserved.

IRQ NO.	IRQ source
219	mute_irq
218	1'b0
217	ge2d_int
216	cusad_interrupt
215	rdma_done_int
214	vid1_wr_irq
213	vid0_wr_irq
212	vdin1_vsync_int
211	vdin1_hsync_int
210	vdin0_vsync_int
209	vdin0_hsync_int
208	viu1_mail_afbc_int[2]
207	lc_curve_int
206	vpu_crash_int
205	viu1_mail_afbc_int[1]
204	hdmitx_interrupt
203	deint_pre_irq
202	deint_post_irq
201	viff_empty_int_cpu
200	viu1_mail_afbc_int[0]
199	viu1_wm_int
198	viu1_dolby_int
197	viu1_vsync_int
196	viu1_hsync_int
195	viu1_line_n_int
194	viu2_vsync_int
193	viu2_hsync_int
192	viu2_line_n_int
191	spicc_5_int
190	spicc_4_int
189	spicc_3_int
188	anakin_irq[3]
187	anakin_irq[2]
186	anakin_irq[1]
185	anakin_irq[0]

Amlogic Proprietary and Confidential
Copyright © Amlogic. All rights reserved.

IRQ NO.	IRQ source
184	spicc_1_int
183	spicc_0_int
182	spi_int
181	sar_adc_irq
180	cecb_irq
179	ceca_irq
178	sd_emmc_C_irq
177	sd_emmc_B_irq
176	sd_emmc_A_irq
175	nand_irq
174	smartcard_irq
173	uart_f_irq
172	uart_e_irq
171	uart_d_irq
170	uart_c_irq
169	uart_b_irq
168	uart_a_irq
167	spicc_2_int
166	i2c_s_a_irq
165	i2c_m_f_irq
164	i2c_m_e_irq
163	i2c_m_d_irq
162	i2c_m_c_irq
161	i2c_m_b_irq
160	i2c_m_a_irq
159	dspb_error_irq[1]
158	dspb_error_irq[0]
157	dspa_error_irq[1]
156	dspa_error_irq[0]
155	ts_demux_irq
154	mali_irq_pp3
153	mali_irq_ppmmu2
152	mali_irq_pp2
151	mali_irq_ppmmu1
150	mali_irq_pp1

Amlogic Proprietary and Confidential
Copyright © Amlogic. All rights reserved.

IRQ NO.	IRQ source
149	mali_irq_ppmmu0
148	mali_irq_pp0
147	mali_irq_pmu
146	mali_irq_pp
145	mali_irq_gpmmu
144	mali_irq_gp
143	pcie_A_irq[7]
142	pcie_A_irq[6]
141	pcie_A_irq[5]
140	pcie_A_irq[4]
139	pcie_A_irq[3]
138	pcie_A_irq[2]
137	pcie_A_irq[1]
136	pcie_A_irq[0]
135	pcie_A_edma_int[1]
134	pcie_A_edma_int[0]
133	sectop_irq[1]
132	sectop_irq[0]
131	u2drd_interrupt
130	u3drd_interrupt
129	usb_iddig_irq0
128	usb_vbusdig_irq0
127	amrisc_int[31]
126	amrisc_int[30]
125	amrisc_int[29]
124	amrisc_int[28]
123	amrisc_int[27]
122	amrisc_int[26]
121	amrisc_int[25]
120	amrisc_int[24]
119	amrisc_int[23]
118	amrisc_int[22]
117	amrisc_int[21]
116	amrisc_int[20]
115	amrisc_int[19]

Amlogic Proprietary and Confidential
Copyright © Amlogic. All rights reserved.

IRQ NO.	IRQ source
114	amrisc_int[18]
113	amrisc_int[17]
112	amrisc_int[16]
111	amrisc_int[15]
110	amrisc_int[14]
109	amrisc_int[13]
108	amrisc_int[12]
107	amrisc_int[11]
106	amrisc_int[10]
105	amrisc_int[9]
104	amrisc_int[8]
103	amrisc_int[7]
102	amrisc_int[6]
101	amrisc_int[5]
100	amrisc_int[4]
99	amrisc_int[3]
98	amrisc_int[2]
97	amrisc_int[1]
96	amrisc_int[0]
95	wave521_vpu_idle_irq
94	wave521_irq
93	dos_mbox_slow_irq[2]
92	dos_mbox_slow_irq[1]
91	dos_mbox_slow_irq[0]
90	demod_irq
89	sp_mbox_irq[1]
88	sp_mbox_irq[0]
87	mipi_dsi1_phy_irq
86	ts_irq_hevc
85	ts_irq_vpu
84	ts_irq_nna
83	ts_irq_gpu
82	viu3_vsync_int
81	viu3_hsync_int
80	viu3_line_n_int

Amlogic Proprietary and Confidential
Copyright © Amlogic. All rights reserved.

IRQ NO.	IRQ source
79	cci_event_irq
78	cci_irq
77	aucpu_irq
76	eth_pmt_intr_o
75	mipi_dsi0_phy_irq
74	eth_gmac_int
73	eth_lpi_intr_o
72	eth_phy_irq[8]
71	eth_phy_irq[7]
70	eth_phy_irq[6]
69	eth_phy_irq[5]
68	eth_phy_irq[4]
67	eth_phy_irq[3]
66	eth_phy_irq[2]
65	eth_phy_irq[1]
64	eth_phy_irq[0]
63	sec_watchdog_irq
62	1'b0
61	1'b0
60	vdin2_vsync_int
59	dwap_irq
58	hdmirx_audmeas_int
57	hdmirx_interrupt
56	mipi_dsi_a_err_intr
55	mipi_dsi_a_intr
54	mipi_dsi_b_err_intr
53	mipi_dsi_b_intr
52	c_pwr_ctrl_irq
51	audio_irq[19]
50	audio_irq[18]
49	audio_irq[17]
48	audio_irq[16]
47	audio_irq[15]
46	audio_irq[14]
45	audio_irq[13]

Amlogic Proprietary and Confidential
Copyright © Amlogic. All rights reserved.

IRQ NO.	IRQ source
44	audio_irq[12]
43	audio_irq[11]
42	audio_irq[10]
41	audio_irq[9]
40	audio_irq[8]
39	audio_irq[7]
38	audio_irq[6]
37	audio_irq[5]
36	audio_irq[4]
35	audio_irq[3]
34	audio_irq[2]
33	audio_irq[1]
32	audio_irq[0]
31	ts_irq_a73
30	ts_irq_a53
29	dma_irq[5]
28	dma_irq[4]
27	dma_irq[3]
26	dma_irq[2]
25	dma_irq[1]
24	dma_irq[0]
23	ir_tx_irq
22	ir_rx_irq
21	gpio_irq[11]
20	gpio_irq[10]
19	gpio_irq[9]
18	gpio_irq[8]
17	gpio_irq[7]
16	gpio_irq[6]
15	gpio_irq[5]
14	gpio_irq[4]
13	gpio_irq[3]
12	gpio_irq[2]
11	gpio_irq[1]
10	gpio_irq[0]

Amlogic Proprietary and Confidential
Copyright © Amlogic. All rights reserved.

IRQ NO.	IRQ source
9	watchdog_irq
8	sec_timerA_irq
7	timerJ_irq
6	timerI_irq
5	timerH_irq
4	timerG_irq
3	timerD_irq
2	timerC_irq
1	timerB_irq
0	timerA_irq

TOP DSP related reset registers.

- each reset includes 3 control register: reg_reset, reg_reset_level, reg_reset_mask;
- when write “1” to reg_reset, it will generate a signal: reset_pulse;
- most of module’s reset is negative, so reset_pulse will invert to reset_pulse_n;
- the usage of reg_reset_level is hold reset_pulse_n to “0”;
- the usage of reg_reset_mask is hold reset_pulse_n to “1”;

Figure 11-17 TOP DSP Reset

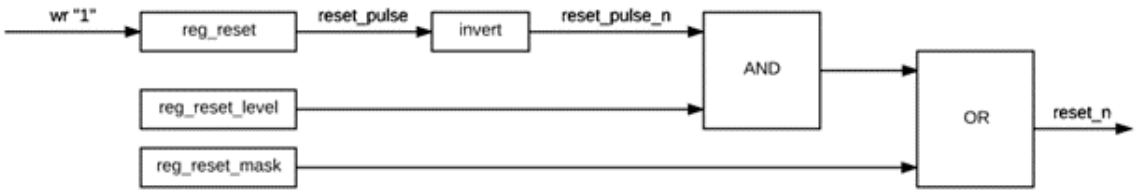

dspa normal reset bit11

dpsb normal reset bit10

RESETCTRL_RESET1 0xfe002004

RESETCTRL_RESET1_LEVEL 0xfe002044

RESETCTRL_RESET1_MASK 0xfe002084

CHIP TOP DSP related GPIOs

Table 11-219

GPIOC_0	JTAG_B_TDO(oe)
GPIOC_1	JTAG_B_TDI(in)
GPIOC_4	JTAG_B_CLK(in)

Amlogic Proprietary and Confidential
Copyright © Amlogic. All rights reserved.

GPIOC_5	JTAG_B_TMS(in)
GPIOD_6	JTAG_A_CLK(in)
GPIOD_7	JTAG_A_TMS(in)
GPIOD_8	JTAG_A_TDI(in)
GPIOD_9	JTAG_A_TDO(oe)

11.5 DDR Datapath

11.5.1 Overview

This part describes the datapath between audio module and DDR.

11.5.2 Audio TODDR

The SoC has 5 TODDR(FIFO), TODDR_A's FIFO depth is 4096 x 64; B/C/D/E are 128 x 64. TODDR module works in the following way:

- All TODDR work at sysclk;
- Resample if need;
- Change format and package to 64 bits data by configuration;
- Write to fifo;
- Read data from fifo and send to DDR automatically by configuration;

Below is the diagram of Audio TODDR.

Figure 11-18 Audio TODDR

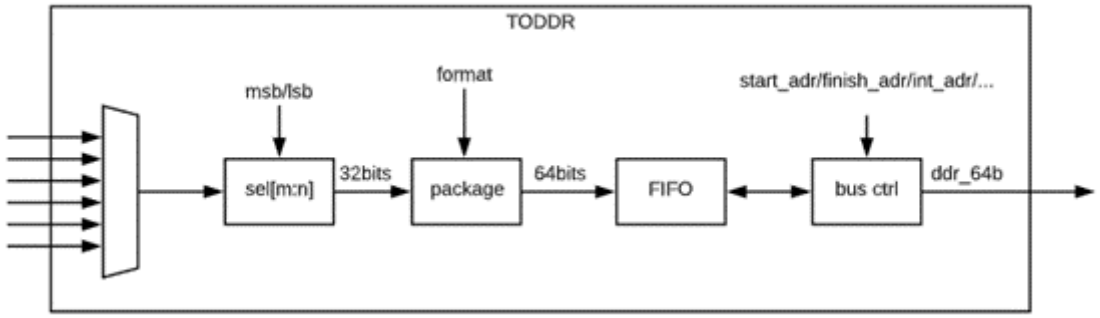

11.5.3 Audio FRDDR

The SoC has 5 FRDDR(FIFO), FRDDR_A's FIFO depth is 256 x 64, B/C/D/E are 128 x 64;

- All FRDDR work at sysclk;
- When enable FRDDR, it will fill FIFO from DDR first;
- When FRDDR receive request, it will read data from fifo and send out;
- FRDDR will fill FIFO automatically by configuration;

Amlogic Proprietary and Confidential
Copyright © Amlogic. All rights reserved.

Below is the Diagram of Audio FRDDR.

Figure 11-19 Audio FRDDR

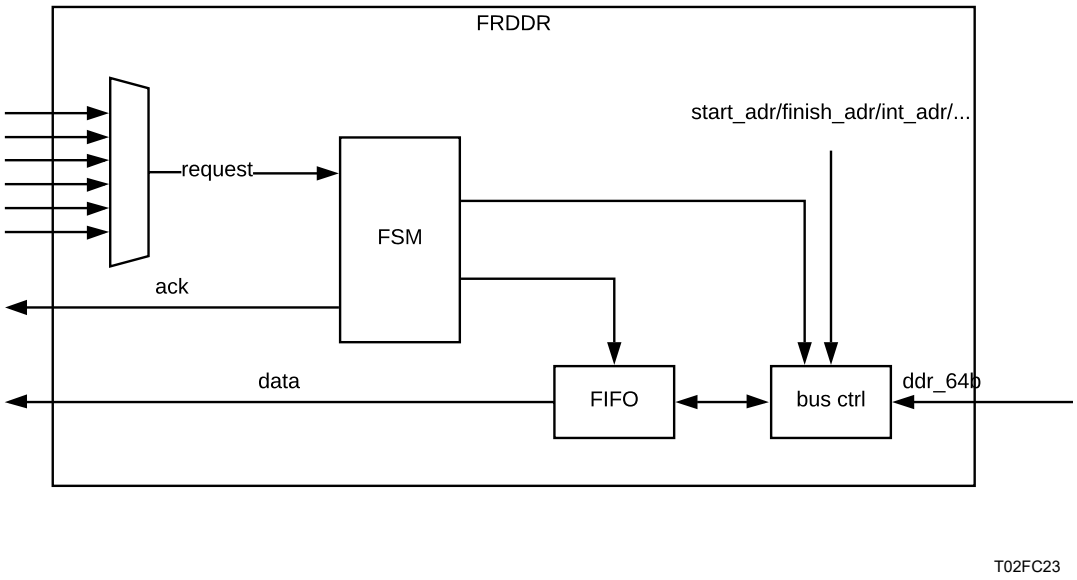

11.6 Audio Loopback

TDMIN_LB can receive one TDMOUT, it can merge two sources in the following way:

- Store one source to temp register;
- When another source arrived, send it out directly;
- When finished, send out temp register;

Below is the diagram of audio loopback datapath.

Amlogic Proprietary and Confidential
Copyright © Amlogic. All rights reserved.

Figure 11-20 Audio Loopback Datapath

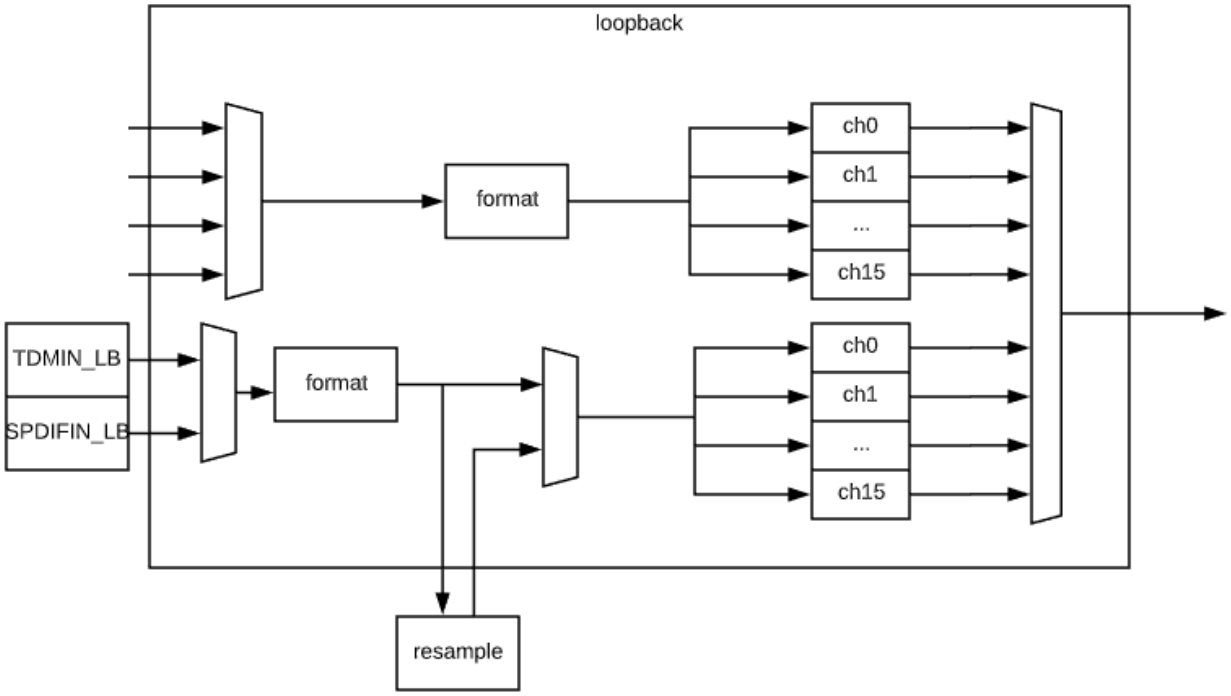

Audio loopback wave form is shown in the figure below.

Figure 11-21 Audio Loopback Wave Form

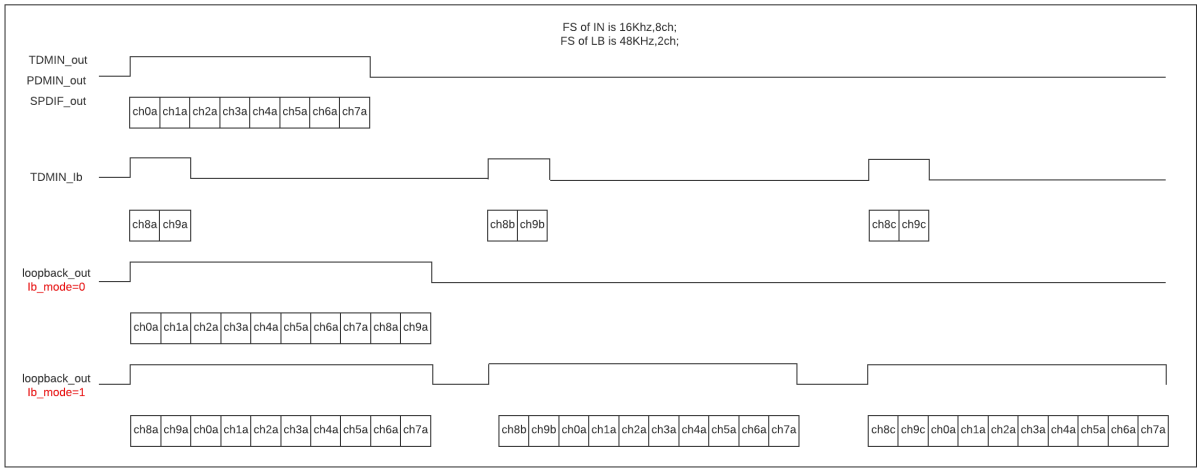

11.7 Audio Resample A/B

Audio resample changes data from one symbol rate to another symbol rate in the following steps:

1. Max 8 audio sources is supported, should be muxed from 1 source to audio_resample core;
2. MSB/LSB selection is supported after source mux;
3. resample core performs the symbol rate convert, max 8/32 channel is supported.;

Amlogic Proprietary and Confidential
Copyright © Amlogic. All rights reserved.

a. If down sample is needed, aa filter should be on, max 64 tap is supported. 1/2 and 1/4 down sample is supported;
b. Audio re-sample use sinc filter, max 64tap, 1/2^28 phase precision interpolation;
c. IIR compensation filter is used for compensate high-frequency damping;

4. Phase lock module is used for input-clock and output-clock symbol rate synchronization.

Figure 11-22 Audio Resample

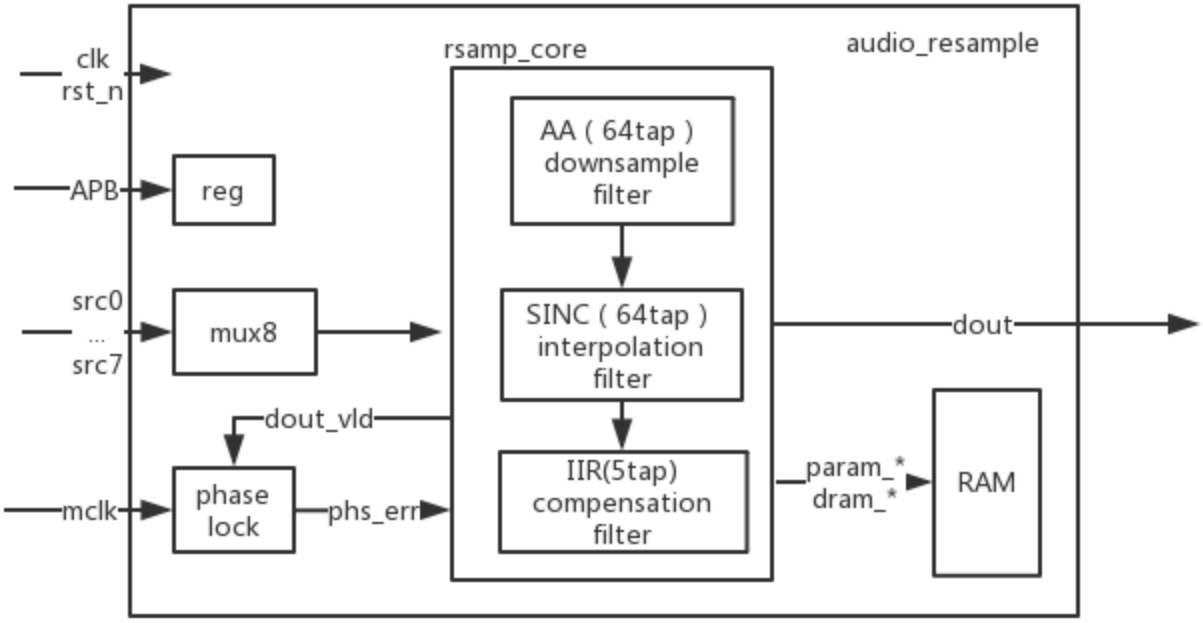

11.8 Audio VAD

VAD will wake up DSP when it determines if voice is present in a particular audio signal. It supports 2 channels audio streams searching which combined from PDM filter output audio stream. The audio stream will be down-sampled to 8K/s rate and de-noised before detection processing. VAD can provide power detection, cepstral detection and spectral entropy detection. It will do the detection per 10ms. It contains one 256p FFT function for cepstral and spectral entropy calculation.

Amlogic Proprietary and Confidential
Copyright © Amlogic. All rights reserved.

Figure 11-23 Audio VAD

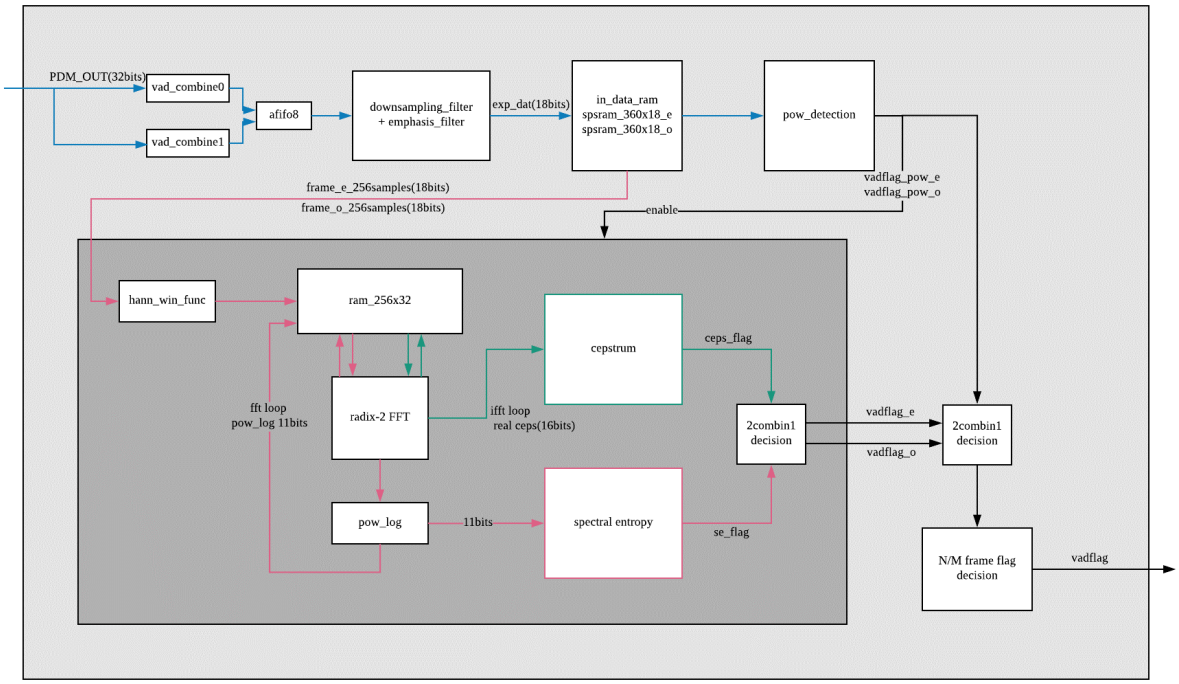

11.9 Audio EQDRC

Audio EQDRC supports 4 channels audio streams. Two channels do eq and drc, the others only do eq.

The basic structure diagram is shown below.

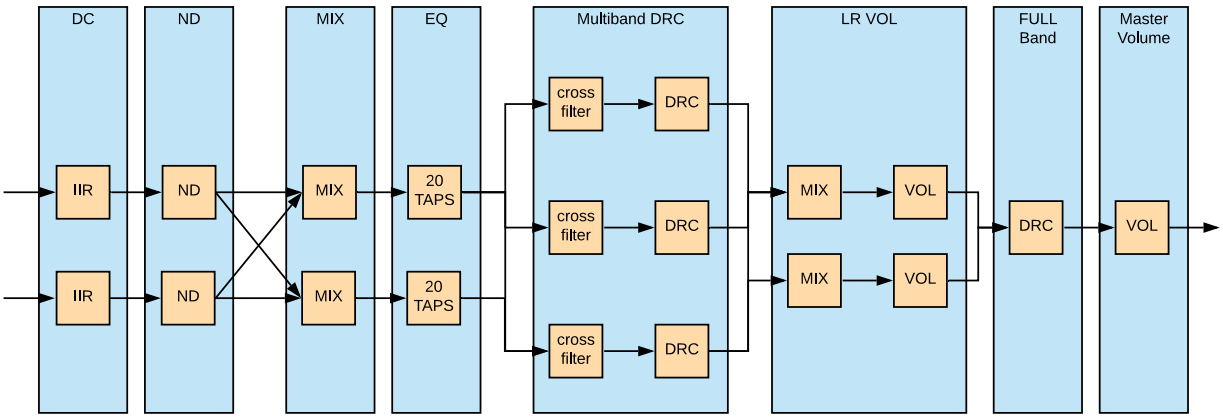

Amlogic Proprietary and Confidential
Copyright © Amlogic. All rights reserved.

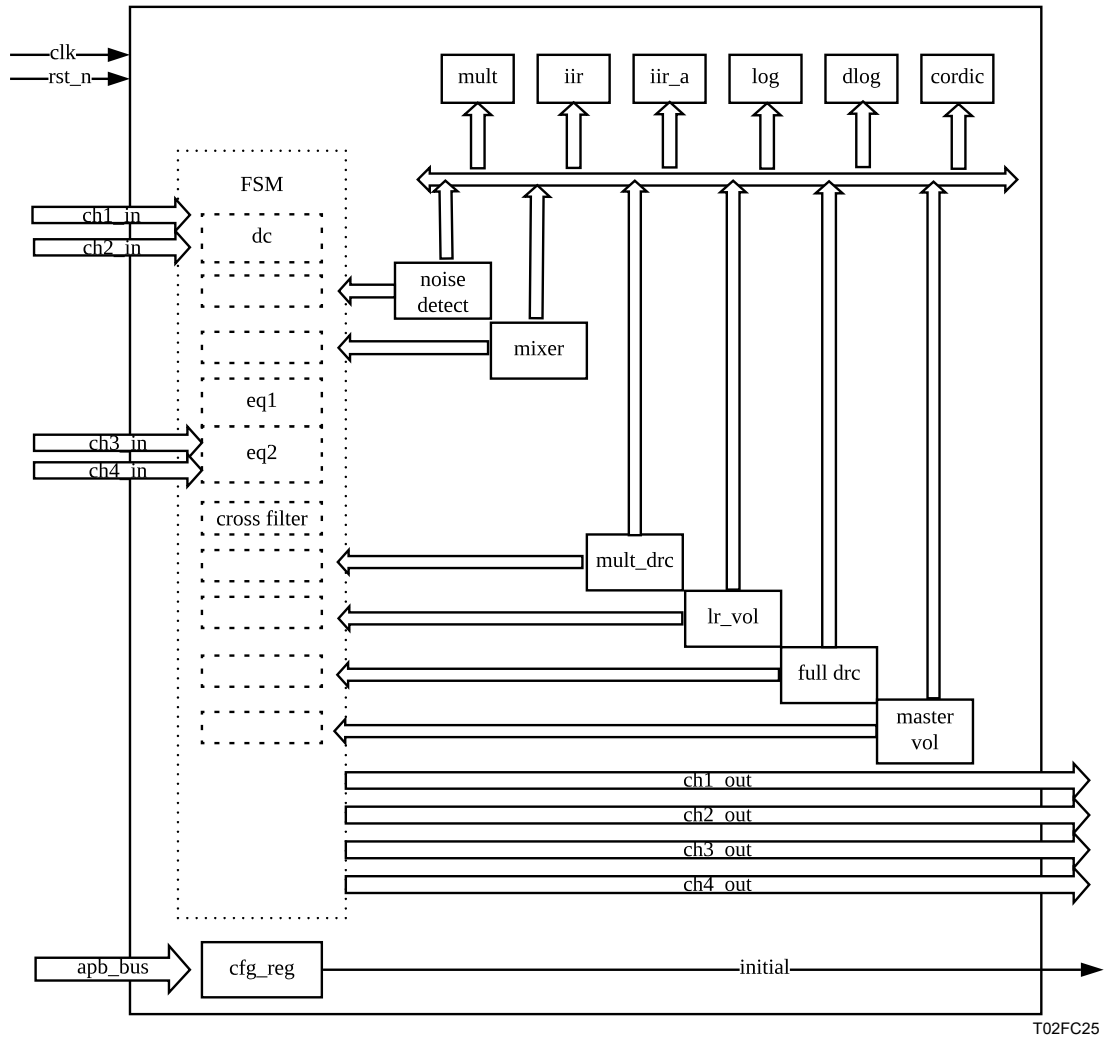

11.10 Audio Locker

The audio input clock and output clock are in different power domain and may have little difference, the difference leads to FIFO problem, the SoC uses Audio Locker module to fix this problem, the basic method is to measure the difference between different clocks and adjust (software dynamically) the clock frequency to make them match.

The diagram of Audio Locker module is shown below.

Amlogic Proprietary and Confidential
Copyright © Amlogic. All rights reserved.

Figure 11-24 Audio Locker

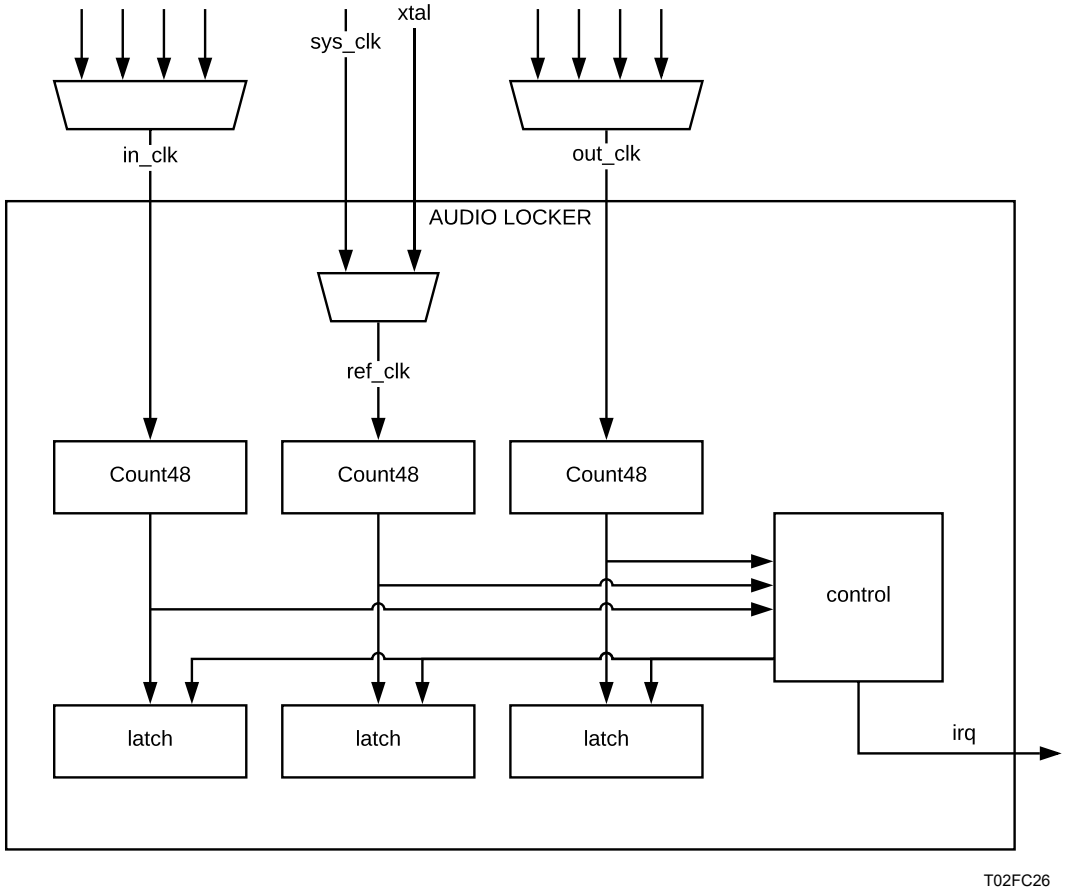

For example: when the difference of two freq creator than threshold is detected, change frequency of clock_out by SW, will keep clock_out close to clock_in.

Amlogic Proprietary and Confidential
Copyright © Amlogic. All rights reserved.

Figure 11-25 Audio Locker Example

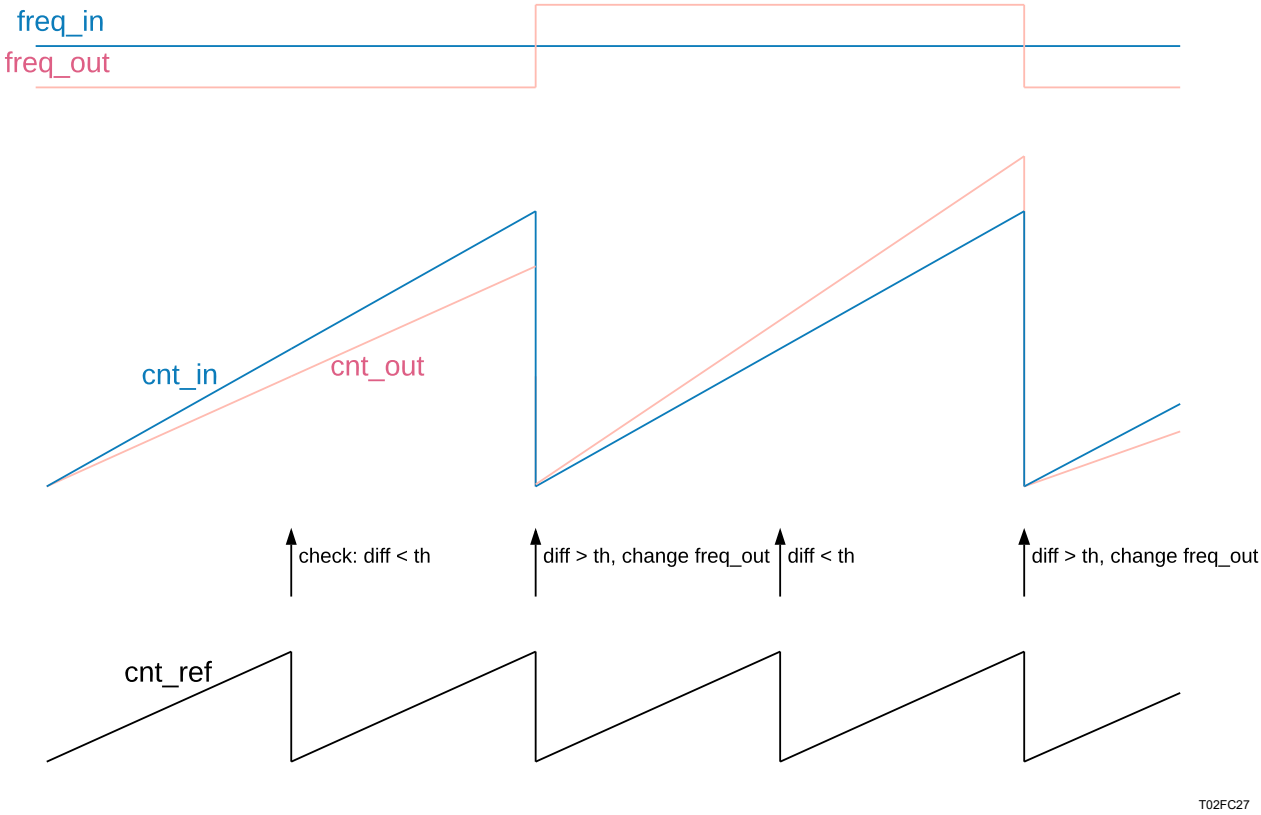

11.11 Register Description

11.11.1 CLK/RESET Registers

For below registers the base address is 0xfe330000.

Each register final address = BASE + address * 4.

Table 11-220 EE_AUDIO_CLK_GATE_EN0 0x00

Bits	R/W	Default	Description
31	R/W	0x0000-0000	frhdmirx, 0:disable; 1: enable;
30	R/W		fratv, 0:disable; 1: enable;
29	R/W		Spdifin_lb, 0:disable; 1: enable;
28	R/W		Audio locker, 0:disable; 1: enable;
27	R/W		tovad, 0:disable; 1: enable;
26	R/W		resampleB, 0:disable; 1: enable;
25	R/W		reserved
24	R/W		reserved
23	R/W		reserved
22	R/W		eqdrc, 0:disable; 1: enable;

Amlogic Proprietary and Confidential
Copyright © Amlogic. All rights reserved.

Bits	R/W	Default	Description
21	R/W		spdifoutB, 0:disable; 1: enable;
20	R/W		reserved
19	R/W		reserved
18	R/W		resampleA, 0:disable; 1: enable;
17	R/W		spdifout, 0:disable; 1: enable;
16	R/W		spdifin, 0:disable; 1: enable;
15	R/W		loopbackA, 0:disable; 1: enable;
14	R/W		toddrc, 0:disable; 1: enable;
13	R/W		toddrb, 0:disable; 1: enable;
12	R/W		toddra, 0:disable; 1: enable;
11	R/W		frddrc, 0:disable; 1: enable;
10	R/W		frddrb, 0:disable; 1: enable;
9	R/W		frddra, 0:disable; 1: enable;
8	R/W		tdmoutc, 0:disable; 1: enable;
7	R/W		tdmoutb, 0:disable; 1: enable;
6	R/W		tmdouta, 0:disable; 1: enable;
5	R/W		tdminlb, 0:disable; 1: enable;
4	R/W		tdminc, 0:disable; 1: enable;
3	R/W		tdminb, 0:disable; 1: enable;
2	R/W		tdmina, 0:disable; 1: enable;
1	R/W		pdm, 0:disable; 1: enable;
0	R/W		ddr_arb, 0:disable; 1: enable;

Table 11-221 EE_AUDIO_CLK_GATE_EN1 0x01

Bits	R/W	Default	Description
31:3	R/W	0x0000-0000	reserved
8	R/W		locker_b
7	R/W		resampleb_old
6	R/W		earcrx
5	R/W		earctx
4	R/W		toddrE
3	R/W		frddrE
2	R/W		loopbackB, 0:disable; 1: enable;
1	R/W		toddrd, 0:disable; 1: enable;
0	R/W		frddrd, 0:disable; 1: enable;

Amlogic Proprietary and Confidential
Copyright © Amlogic. All rights reserved.

Table 11-222 EE_AUDIO_MCLK_A_CTRL 0x02

Bits	R/W	Default	Description
31	R/W	0x0000-0000	clk_en, 0:disable; 1: enable;
30	R/W		Force_oscin, 0:disable; 1: force clock source as oscin(24M);
26:24	R/W		clk_sel, 0:mp0_pll; 1:mp1_pll; 2:mp2_pll; 3:mp3_pll; 4:hifi_pll; 5:fclk_div3(666M); 6:fclk_div4(500M); 7:cts_oscin(24M);
15:0	R/W		clk_div, the frequency of mclk = pll/(clk_div+1);

EE_AUDIO_MCLK_B_CTRL 0x03

Same as EE_AUDIO_MCLK_A_CTRL.

EE_AUDIO_MCLK_C_CTRL 0x04

Same as EE_AUDIO_MCLK_A_CTRL.

EE_AUDIO_MCLK_D_CTRL 0x05

Same as EE_AUDIO_MCLK_A_CTRL.

EE_AUDIO_MCLK_E_CTRL 0x06

Same as EE_AUDIO_MCLK_A_CTRL.

EE_AUDIO_MCLK_F_CTRL 0x07

Same as EE_AUDIO_MCLK_A_CTRL.

Table 11-223 EE_AUDIO_SW_RESET0 0x0A

Bits	R/W	Default	Description
31	R/W	0	Frhdmirx
30	R/W	0	Fratv
29	R/W	0	Spdifin_lb
28	R/W	0	Locker
27	R/W	0	Tovad
26	R/W	0	resampleB
25	R/W	0	clk tree
24	R/W	0	tohdmitx
23	R/W	0	toacodec
20	R/W	0	ddrarb
19	R/W	0	resample
18	R/W	0	eqdrc
17	R/W	0	spdifin

Amlogic Proprietary and Confidential
Copyright © Amlogic. All rights reserved.

Bits	R/W	Default	Description
16	R/W	0	spdifoutB
15	R/W	0	spdifout
14	R/W	0	tdmoutc
13	R/W	0	tdmoutb
12	R/W	0	tdmouta
11	R/W	0	frddrc
10	R/W	0	frddrb
9	R/W	0	frddra
8	R/W	0	toddrc
7	R/W	0	toddrb
6	R/W	0	toddra
5	R/W	0	loopback
4	R/W	0	tdmin_lb
3	R/W	0	tdminc
2	R/W	0	tdminb
1	R/W	0	tdmina
0	R/W	0	pdm

Table 11-224 EE_AUDIO_SW_RESET1 0x0B

Bits	R/W	Default	Description
8	R/W	0	lockerB
7	R/W	0	resampleB_old
6	R/W	0	earcRX
5	R/W	0	earcTX
4	R/W	0	frddrE
3	R/W	0	toddrE
2	R/W	0	loopbackB
1	R/W	0	toddrd
0	R/W	0	frddrd

Table 11-225 EE_AUDIO_MST_A_SCLK_CTRL0 0x10

Bits	R/W	Default	Description
31	R/W	0x0000-0000	clk_in_en, 0:disable; 1: enable;
30	R/W		clk_out_en, 0:disable; 1: enable;
29:20	R/W		sclk_divN, the frequency of sclk = mclk/(sclk_divN+1);

Amlogic Proprietary and Confidential
Copyright © Amlogic. All rights reserved.

Bits	R/W	Default	Description
19:10	R/W		lrclk_hi, duty cycle of LRCLK, less than lrclk_div; example 0: lrclk_hi = 1, LRCLK will only keep one cycle; example 1: lrclk_hi = lrclk_div/2, LRCLK will be 50/50 duty cycle;
9:0	R/W		lrclk_divN, the frequency of lrclk = sclk/(lrclk_divN+1);

Table 11-226 EE_AUDIO_MST_A_SCLK_CTRL1 0x11

Bits	R/W	Default	Description
31:28	R/W	0x0000-0000	sclk_ph0_sel, select from sclk_delay_line(depth is 16)
27:24	R/W		lrclk_ph0_sel, select from lrclk_delay_line(depth is 16)
23:20	R/W		sclk_ph1_sel, select from sclk_delay_line(depth is 16)
19:16	R/W		lrclk_ph1_sel, select from lrclk_delay_line(depth is 16)
15:12	R/W		sclk_ph2_sel, select from sclk_delay_line(depth is 16)
11:8	R/W		lrclk_ph2_sel, select from lrclk_delay_line(depth is 16)
5:0	R/W		clk_inv, invert clk; [5]: lrclk_ph2; [4]: sclk_ph2; [3]: lrclk_ph1; [2]: sclk_ph1; [1]: lrclk_ph0; [0]: sclk_ph0;

EE_AUDIO_MST_B_SCLK_CTRL0 0x12

Same as EE_AUDIO_MST_A_SCLK_CTRL0

EE_AUDIO_MST_B_SCLK_CTRL1 0x13

Same as EE_AUDIO_MST_A_SCLK_CTRL1

EE_AUDIO_MST_C_SCLK_CTRL0 0x14

Same as EE_AUDIO_MST_A_SCLK_CTRL0

EE_AUDIO_MST_C_SCLK_CTRL1 0x15

Same as EE_AUDIO_MST_A_SCLK_CTRL1

EE_AUDIO_MST_D_SCLK_CTRL0 0x16

Same as EE_AUDIO_MST_A_SCLK_CTRL0

EE_AUDIO_MST_D_SCLK_CTRL1 0x17

Same as EE_AUDIO_MST_A_SCLK_CTRL1

EE_AUDIO_MST_E_SCLK_CTRL0 0x18

Same as EE_AUDIO_MST_A_SCLK_CTRL0

EE_AUDIO_MST_E_SCLK_CTRL1 0x19

Same as EE_AUDIO_MST_A_SCLK_CTRL1

EE_AUDIO_MST_F_SCLK_CTRL0 0x1a

Same as EE_AUDIO_MST_A_SCLK_CTRL0

Amlogic Proprietary and Confidential
Copyright © Amlogic. All rights reserved.

EE_AUDIO_MST_F_SCLK_CTRL1 0x1b

Same as EE_AUDIO_MST_A_SCLK_CTRL1

Table 11-227 EE_AUDIO_MST_DLY_CTRL0 0x1c

Bits	R/W	Default	Description
31:24	R/W	0x0000-0000	reserved
23:20	R/W		mst_sclk_f_ph1_dly_sel;
19:16	R/W		mst_sclk_e_ph1_dly_sel;
15:12	R/W		mst_sclk_d_ph1_dly_sel;
11:8	R/W		mst_sclk_c_ph1_dly_sel;
7:4	R/W		mst_sclk_b_ph1_dly_sel;
3:0	R/W		mst_sclk_a_ph1_dly_sel;

Table 11-228 EE_AUDIO_MST_DLY_CTRL1 0x1d

Bits	R/W	Default	Description
31:24	R/W	0x0000-0000	reserved
23:20	R/W		mst_lrclk_f_ph1_dly_sel;
19:16	R/W		mst_lrclk_e_ph1_dly_sel;
15:12	R/W		mst_lrclk_d_ph1_dly_sel;
11:8	R/W		mst_lrclk_c_ph1_dly_sel;
7:4	R/W		mst_lrclk_b_ph1_dly_sel;
3:0	R/W		mst_lrclk_a_ph1_dly_sel;

Table 11-229 EE_AUDIO_CLK_TDMIN_A_CTRL 0x20

Bits	R/W	Default	Description
31	R/W	0x0000-0000	clk_in_en, 0:disable; 1: enable;
30	R/W		clk_out_en, 0:disable; 1: enable;
29	R/W		sclk_inv, 0:not revert; 1: revert clock;

Amlogic Proprietary and Confidential
Copyright © Amlogic. All rights reserved.

Bits	R/W	Default	Description
27:24	R/W		sclk_sel, 0:mst_a_sclk_ph1; 1:mst_b_sclk_ph1; 2:mst_c_sclk_ph1; 3:mst_d_sclk_ph1; 4:mst_e_sclk_ph1; 5:mst_f_sclk_ph1; 6:i_slv_sclk_a ; 7:i_slv_sclk_b ; 8:i_slv_sclk_c ; 9::i_slv_sclk_d ; 10:i_slv_sclk_e ; 11:i_slv_sclk_f ; 12:i_slv_sclk_g ; 13:i_slv_sclk_h ; 14:i_slv_sclk_i ; 15:i_slv_sclk_j ;
23:20	R/W		lrclk_sel, 0: mst_a_lrclk_ph1; 1:mst_b_lrclk_ph1; 2:mst_c_lrclk_ph1; 3:mst_d_lrclk_ph1; 4:mst_e_lrclk_ph1; 5:mst_f_lrclk_ph1; 6:i_slv_lrclk_a ; 7:i_slv_lrclk_b ; 8:i_slv_lrclk_c ; 9::i_slv_lrclk_d ; 10:i_slv_lrclk_e ; 11:i_slv_lrclk_f ; 12:i_slv_lrclk_g ; 13:i_slv_lrclk_h ; 14:i_slv_lrclk_i ; 15:i_slv_lrclk_j ;

EE_AUDIO_CLK_TDMIN_B_CTRL 0x21

Same as EE_AUDIO_CLK_TDMIN_A_CTRL

EE_AUDIO_CLK_TDMIN_C_CTRL 0x22

Same as EE_AUDIO_CLK_TDMIN_A_CTRL

EE_AUDIO_CLK_TDMIN_LB_CTRL 0x23

Same as EE_AUDIO_CLK_TDMIN_A_CTRL

Table 11-230 EE_AUDIO_CLK_TDMOUT_A_CTRL 0x24

Bits	R/W	Default	Description
31	R/W	0x0000-0000	clk_in_en, 0:disable; 1: enable;
30	R/W		clk_out_en, 0:disable; 1: enable;
29	R/W		sclk_inv, 0:not revert; 1: revert clock;
28	R/W		Sclk_ws_inv, for the capture ws sclk; 0: not revert; 1: revert clock;

Amlogic Proprietary and Confidential
Copyright © Amlogic. All rights reserved.

Bits	R/W	Default	Description
27:24	R/W		sclk_sel, 0:mst_a_sclk_ph2; 1:mst_b_sclk_ph2; 2:mst_c_sclk_ph2; 3:mst_d_sclk_ph2; 4:mst_e_sclk_ph2; 5:mst_f_sclk_ph2; 6:i_slv_sclk_a ; 7:i_slv_sclk_b ; 8:i_slv_sclk_c ; 9::i_slv_sclk_d ; 10:i_slv_sclk_e ; 11:i_slv_sclk_f ; 12:i_slv_sclk_g ; 13:i_slv_sclk_h ; 14:i_slv_sclk_i ; 15:i_slv_sclk_j ;
23:20	R/W		lrclk_sel, 0:mst_a_lrclk_ph2; 1:mst_b_lrclk_ph2; 2:mst_c_lrclk_ph2; 3:mst_d_lrclk_ph2; 4:mst_e_lrclk_ph2; 5:mst_f_lrclk_ph2; 6:i_slv_lrclk_a ; 7:i_slv_lrclk_b ; 8:i_slv_lrclk_c ; 9::i_slv_lrclk_d ; 10:i_slv_lrclk_e ; 11:i_slv_lrclk_f ; 12:i_slv_lrclk_g ; 13:i_slv_lrclk_h ; 14:i_slv_lrclk_i ; 15:i_slv_lrclk_j ;

EE_AUDIO_CLK_TDMOUT_B_CTRL 0x25

Same as EE_AUDIO_CLK_TDMOUT_A_CTRL

EE_AUDIO_CLK_TDMOUT_C_CTRL 0x26

Same as EE_AUDIO_CLK_TDMOUT_A_CTRL

Table 11-231 EE_AUDIO_CLK_SPDIFIN_CTRL 0x27

Bits	R/W	Default	Description
31	R/W	0x0000-0000	clk_en, 0:disable; 1: enable;
30	R/W		Force_oscin, 0:disable; 1: force clock source as oscin(24M);

Amlogic Proprietary and Confidential
Copyright © Amlogic. All rights reserved.

Bits	R/W	Default	Description
27:24	R/W		clk_sel, 0:mp0_pll; 1:mp1_pll; 2:mp2_pll; 3:mp3_pll; 4:hifi_pll; 5:fclk_div3(666M); 6:fclk_div4(500M); 7:fclk_div5(400M); 8:mst_a_sclk_ph1; 9:mst_b_sclk_ph1; 10:mst_c_sclk_ph1; 11:mst_d_sclk_ph1; 12:mst_e_sclk_ph1; 13:mst_f_sclk_ph1;
7:0	R/W		clk_div, set 7 if need div 8

Table 11-232 EE_AUDIO_CLK_SPDIFOUT_CTRL 0x28

Bits	R/W	Default	Description
31	R/W	0x0000-0000	clk_en, 0:disable; 1: enable;
30	R/W		Force_oscin, 0:disable; 1: force clock source as oscin(24M);
27:24	R/W		clk_sel, 0:mp0_pll; 1:mp1_pll; 2:mp2_pll; 3:mp3_pll; 4:hifi_pll; 5:fclk_div3(666M); 6:fclk_div4(500M); 7:cts_oscin(24M) 8:mst_a_sclk_ph2; 9:mst_b_sclk_ph2; 10:mst_c_sclk_ph2; 11:mst_d_sclk_ph2; 12:mst_e_sclk_ph2; 13:mst_f_sclk_ph2;
9:0	R/W		clk_div, set 7 if need div 8

Table 11-233 EE_AUDIO_CLK_RESAMPLEA_CTRL 0x29

Bits	R/W	Default	Description
31	R/W	0x0000-0000	clk_ en, 0:disable; 1: enable;
30	R/W		Force_oscin, 0:disable; 1: force clock source as oscin(24M);

Amlogic Proprietary and Confidential
Copyright © Amlogic. All rights reserved.

Bits	R/W	Default	Description
27:24	R/W		sclk_sel, 0:mst_a_mclk; 1:mst_b_mclk; 2:mst_c_mclk; 3:mst_d_mclk; 4:mst_e_mclk; 5:mst_f_mclk; 6:i_slv_sclk_a ; 7:i_slv_sclk_b ; 8:i_slv_sclk_c ; 9:i_slv_sclk_d ; 10:i_slv_sclk_e ; 11:i_slv_sclk_f ; 12:i_slv_sclk_g ; 13:i_slv_sclk_h ; 14:i_slv_sclk_i ; 15:i_slv_sclk_j ;
7:0	R/W		clk_div, set 7 if need div 8

Table 11-234 EE_AUDIO_CLK_LOCKER_CTRL 0x2a

Bits	R/W	Default	Description
31	R/W	0x0000-0000	lock_out_clk; 0:disable; 1:enable;
30	R/W		Force_oscin for lock_out_clk, 0:disable; 1: force clock source as oscin(24M);
27:24	R/W		sclk_sel, 0:mst_a_mclk; 1:mst_b_mclk; 2:mst_c_mclk; 3:hdmirx_i2s_sclk; 4:world_sync; 5:hdmirx_find_z; 6:i_slv_sclk_a ; 7:i_slv_sclk_b ; 8:i_slv_sclk_c ; 9:i_slv_sclk_d ; 10:i_slv_sclk_e ; 11:earcrx_pll_dmac_ck ; 12:resample_b_vld; 13:resample_a_vld ; 14:earcrx find x/y/z ; 15:spdifin find x/y/z ;
23:16	R/W		clk_div, lock_out_clk, set 7 if need div 8
15	R/W		clk_en, lock_in_clk; 0:disable; 1:enable;
14	R/W		Force_oscin for lock_in_clk, 0:disable; 1: force clock source as oscin(24M);

Amlogic Proprietary and Confidential
Copyright © Amlogic. All rights reserved.

Bits	R/W	Default	Description
11:8	R/W		clk_sel, lock_in_clk; 0:mst_a_mclk; 1:mst_b_mclk; 2:mst_c_mclk; 3:mst_d_mclk; 4:mst_e_mclk; 5:mst_f_mclk; 6:i_slv_sclk_a ; 7:i_slv_sclk_b ; 8:i_slv_sclk_c ; 9::i_slv_sclk_d ; 10:i_slv_sclk_e ; 11:earcrx_pll_dmac_ck ; 12:resample_b_vld; 13:resample_a_vld ; 14:earcrx find x/y/z ; 15:spdifin find x/y/z ;
7:0	R/W		clk_div, lock_in_clk, set 7 if need div 8

Table 11-235 EE_AUDIO_CLK_PDMIN_CTRL0 0x2b

Bits	R/W	Default	Description
31	R/W	0x0000-0000	clk_en, 0:disable; 1: enable;
30	R/W		Force_oscin, 0:disable; 1: force clock source as oscin(24M);
26:24	R/W		clk_sel, 0:mp0_pll; 1:mp1_pll; 2:mp2_pll; 3:mp3_pll; 4:hifi_pll; 5:fclk_div3(666M); 6:fclk_div4(500M); 7:cts_oscin(24M);
15:0	R/W		clk_div, set 7 if need div 8

Table 11-236 EE_AUDIO_CLK_PDMIN_CTRL1 0x2c

Bits	R/W	Default	Description
31	R/W	0x0000-0000	clk_en, 0:disable; 1: enable;
30	R/W		Force_oscin, 0:disable; 1: force clock source as oscin(24M);
26:24	R/W		clk_sel, 0:cts_oscin(24M); 1:mp1_pll; 2:mp2_pll; 3:mp3_pll; 4:hifi_pll; 5:fclk_div3(666M); 6:fclk_div4(500M); 7:fclk_div5(400M);
15:0	R/W		clk_div, set 7 if need div 8

Amlogic Proprietary and Confidential
Copyright © Amlogic. All rights reserved.

Table 11-237 EE_AUDIO_CLK_SPDIFOUT_B_CTRL 0x2d

Bits	R/W	Default	Description
31	R/W	0x0000-0000	clk_en, 0:disable; 1: enable;
30	R/W		Force_oscin, 0:disable; 1: force clock source as oscin(24M);
27:24	R/W		clk_sel, 0:mp0_pll; 1:mp1_pll; 2:mp2_pll; 3:mp3_pll; 4:hifi_pll; 5:fclk_div3(666M); 6:fclk_div4(500M); 7:cts_oscin(24M); 8:mst_a_sclk_ph1; 9:mst_b_sclk_ph1; 10:mst_c_sclk_ph1; 11:mst_d_sclk_ph1; 12:mst_e_sclk_ph1; 13:mst_f_sclk_ph1;
9:0	R/W		clk_div, set 7 if need div 8

Table 11-238 EE_AUDIO_CLK_RESAMPLEB_CTRL 0x2E

Bits	R/W	Default	Description
31	R/W	0x0000-0000	clk_ en, 0:disable; 1: enable;
30	R/W		sclk_sel,
27:24	R/W		0:mst_a_mclk; 1:mst_b_mclk; 2:mst_c_mclk; 3:mst_d_mclk; 4:mst_e_mclk; 5:mst_f_mclk; 6:i_slv_sclk_a ; 7:i_slv_sclk_b ; 8:i_slv_sclk_c ; 9::i_slv_sclk_d ; 10:i_slv_sclk_e ; 11:i_slv_sclk_f ; 12:i_slv_sclk_g ; 13:i_slv_sclk_h ; 14:i_slv_sclk_i ; 15:i_slv_sclk_j ;
7:0	R/W		clk_div, set 7 if need div 8

Table 11-239 EE_AUDIO_CLK_SPDIFIN_LB_CTRL 0x2F

Bits	R/W	Default	Description
31	R/W	0x0000-0000	clk_ en, 0:disable; 1: enable;
30	R/W		Clk_sel: 0: spdif_out_a clk; 1: spdif_out_b clk;
29	R/W		Clk_inv

Amlogic Proprietary and Confidential
Copyright © Amlogic. All rights reserved.

Table 11-240 EE_AUDIO_CLK_EQDRC_CTRL 0x30

Bits	R/W	Default	Description
31	R/W	0x0000-0000	clk_ en, 0:disable; 1: enable;
30	R/W		Force_oscin, 0:disable; 1: force clock source as oscin(24M);
26:24	R/W		0:cts_oscin(24M); 1:mp1_pll; 2:mp2_pll; 3:mp3_pll; 4:hifi_pll; 5:fclk_div3(666M); 6:fclk_div4(500M); 7:fclk_div5(400M)
15:0	R/W		clk_div, set 7 if need div 8

Table 11-241 EE_AUDIO_CLK_VAD_CTRL 0x31

Bits	R/W	Default	Description
31	R/W	0x0000-0000	clk_ en, 0:disable; 1: enable;
30	R/W		Force_oscin, 0:disable; 1: force clock source as oscin(24M);
26:24	R/W		0:cts_oscin(24M); 1:mp1_pll; 2:mp2_pll; 3:mp3_pll; 4:hifi_pll; 5:fclk_div3(666M); 6:fclk_div4(500M); 7:fclk_div5(400M)
15:0	R/W		clk_div, set 7 if need div 8

Table 11-242 EE_AUDIO_EARCTX_CMDC_CLK_CTRL 0x32

Bits	R/W	Default	Description
31	R/W	0x0000-0000	clk_ en, 0:disable; 1: enable;
30	R/W		Force_oscin, 0:disable; 1: force clock source as oscin(24M);
26:24	R/W		0:cts_oscin(24M); 1:mp1_pll; 2:mp2_pll; 3:mp3_pll; 4:hifi_pll; 5:fclk_div3(666M); 6:fclk_div4(500M); 7:fclk_div5(400M)
15:0	R/W		clk_div, set 7 if need div 8

Amlogic Proprietary and Confidential
Copyright © Amlogic. All rights reserved.

Table 11-243 EE_AUDIO_EARCTX_DMAC_CLK_CTRL 0x33

Bits	R/W	Default	Description
31	R/W	0x0000-0000	clk_ en, 0:disable; 1: enable;
30	R/W		Force_oscin, 0:disable; 1: force clock source as oscin(24M);
26:24	R/W		0:cts_oscin(24M); 1:mp1_pll; 2:mp2_pll; 3:mp3_pll; 4:hifi_pll; 5:fclk_div3(666M); 6:fclk_div4(500M); 7:fclk_div5(400M)
15:0	R/W		clk_div, set 7 if need div 8

Table 11-244 EE_AUDIO_EARCRX_CMDC_CLK_CTRL 0x34

Bits	R/W	Default	Description
31	R/W	0x0000-0000	clk_ en, 0:disable; 1: enable;
30	R/W		Force_oscin, 0:disable; 1: force clock source as oscin(24M);
26:24	R/W		0:cts_oscin(24M); 1:mp1_pll; 2:mp2_pll; 3:mp3_pll; 4:hifi_pll; 5:fclk_div3(666M); 6:fclk_div4(500M); 7:fclk_div5(400M)
15:0	R/W		clk_div, set 7 if need div 8

Table 11-245 EE_AUDIO_EARCRX_DMAC_CLK_CTRL 0x35

Bits	R/W	Default	Description
31	R/W	0x0000-0000	clk_ en, 0:disable; 1: enable;
30	R/W		Force_oscin, 0:disable; 1: force clock source as oscin(24M);
26:24	R/W		0:cts_oscin(24M); 1:mp1_pll; 2:mp2_pll; 3:mp3_pll; 4:hifi_pll; 5:fclk_div3(666M); 6:fclk_div4(500M); 7:fclk_div5(400M)
15:0	R/W		clk_div, set 7 if need div 8

Amlogic Proprietary and Confidential
Copyright © Amlogic. All rights reserved.

Table 11-246 EE_AUDIO_CLK_LOCKERB_CTRL 0x36

Bits	R/W	Default	Description
Bits	From	Descrip-tion	
31	R/W	0x0000-0000	lockb_out_clk; 0:disable; 1:enable;
30	R/W		Force_oscin for lock_out_clk, 0:disable; 1: force clock source as oscin(24M);
27:24	R/W		sclk_sel, 0:mst_a_mclk; 1:mst_b_mclk; 2:mst_c_mclk; 3:hdmirx_i2s_sclk; 4:world_sync; 5:hdmirx_find_z; 6:i_slv_sclk_a ; 7:i_slv_sclk_b ; 8:i_slv_sclk_c ; 9::i_slv_sclk_d ; 10:i_slv_sclk_e ; 11:earcrx_pll_dmac_ck ; 12:resample_b_vld; 13:resample_a_vld ; 14:earcrx find x/y/z ; 15:spdifin find x/y/z ;
23:16	R/W		clk_div, lock_out_clk, set 7 if need div 8
15	R/W		clk_en, lock_in_clk; 0:disable; 1:enable;
14	R/W		Force_oscin for lock_in_clk, 0:disable; 1: force clock source as oscin(24M);
11:8	R/W		clk_sel, lock_inb_clk; 0:mst_a_mclk; 1:mst_b_mclk; 2:mst_c_mclk; 3:mst_d_mclk; 4:mst_e_mclk; 5:mst_f_mclk; 6:i_slv_sclk_a ; 7:i_slv_sclk_b ; 8:i_slv_sclk_c ; 9::i_slv_sclk_d ; 10:i_slv_sclk_e ; 11:earcrx_pll_dmac_ck ; 12:resample_b_vld; 13:resample_a_vld ; 14:earcrx find x/y/z ; 15:spdifin find x/y/z ;
7:0	R/W		clk_div, lock_in_clk, set 7 if need div 8

11.11.2 OTHER Registers

The audio module includes 64 exception irqs, see the following table.

Table 11-247 Audio IRQs

Bits	From	Description
63	TODDR_A	CHNUM_SYNC_ERR1: detect write new ch when pop buffer;
62	TODDR_A	CHNUM_SYNC_ERR0: miss CH (cur_chnum_id != reg_chnum_id)

Amlogic Proprietary and Confidential
Copyright © Amlogic. All rights reserved.

Bits	From	Description
61	TODDR_B	CHNUM_SYNC_ERR1: detect write new ch when pop buffer;
60	TODDR_B	CHNUM_SYNC_ERR0: miss CH (cur_chnum_id != reg_chnum_id)
59	TODDR_C	CHNUM_SYNC_ERR1: detect write new ch when pop buffer;
58	TODDR_C	CHNUM_SYNC_ERR0: miss CH (cur_chnum_id != reg_chnum_id)
57	TODDR_D	CHNUM_SYNC_ERR1: detect write new ch when pop buffer;
56	TODDR_D	CHNUM_SYNC_ERR0: miss CH (cur_chnum_id != reg_chnum_id)
55	TODDR_E	CHNUM_SYNC_ERR1: detect write new ch when pop buffer;
54	TODDR_E	CHNUM_SYNC_ERR0: miss CH (cur_chnum_id != reg_chnum_id)
53		
52		
51		
50		
49	PDMIN	HPF NOT FINISH
48	PDMIN	HCIC NOT FINISH
47		
46	TDMIN_A	AFIFO OVERFLOW
45	TDMIN_A	SLOT_CNT_ERR, SLOT CNT between two WS_RISE didn’t equal to REG_SLOT_NUM
44	TDMIN_A	BIT_CNT_ERR, BIT CNT between two SLOT didn’t equal to REG_BIT_NUM
43		
42	TDMIN_B	AFIFO OVERFLOW
41	TDMIN_B	SLOT_CNT_ERR, SLOT CNT between two WS_RISE didn’t equal to REG_SLOT_NUM
40	TDMIN_B	BIT_CNT_ERR, BIT CNT between two SLOT didn’t equal to REG_BIT_NUM
39		
38	TDMIN_C	AFIFO OVERFLOW
37	TDMIN_C	SLOT_CNT_ERR, SLOT CNT between two WS_RISE didn’t equal to REG_SLOT_NUM
36	TDMIN_C	BIT_CNT_ERR, BIT CNT between two SLOT didn’t equal to REG_BIT_NUM
35	DDR_ARB	locked for one request for long time (> time_out_cnt)
34	TDMIN_LB	AFIFO OVERFLOW
33	TDMIN_LB	SLOT_CNT_ERR, SLOT CNT between two WS_RISE didn’t equal to REG_SLOT_NUM
32	TDMIN_LB	BIT_CNT_ERR, BIT CNT between two SLOT didn’t equal to REG_BIT_NUM
31	LOOPBACK_A	ORIG DATA,CHNUM_SYNC_ERR1: detect write new ch when pop buffer;
30	LOOPBACK_A	ORIG DATA,CHNUM_SYNC_ERR0: miss CH (cur_chnum_id != reg_chnum_id)
29	LOOPBACK_A	INSERT DATA,CHNUM_SYNC_ERR1: detect write new ch when pop buffer;
28	LOOPBACK_A	INSERT DATA,CHNUM_SYNC_ERR0: miss CH (cur_chnum_id != reg_chnum_id)

Amlogic Proprietary and Confidential
Copyright © Amlogic. All rights reserved.

Bits	From	Description
27	LOOPBACK_B	ORIG DATA,CHNUM_SYNC_ERR1: detect write new ch when pop buffer;
26	LOOPBACK_B	ORIG DATA,CHNUM_SYNC_ERR0: miss CH (cur_chnum_id != reg_chnum_id)
25	LOOPBACK_B	INSERT DATA,CHNUM_SYNC_ERR1: detect write new ch when pop buffer;
24	LOOPBACK_B	INSERT DATA,CHNUM_SYNC_ERR0: miss CH (cur_chnum_id != reg_chnum_id)
23	RESAMPLE_A	CHNUM_SYNC_ERR1: detect write new ch when pop buffer;
22	RESAMPLE_A	CHNUM_SYNC_ERR0: miss CH (cur_chnum_id != reg_chnum_id)
21	RESAMPLE_B	CHNUM_SYNC_ERR1: detect write new ch when pop buffer;
20	RESAMPLE_B	CHNUM_SYNC_ERR0: miss CH (cur_chnum_id != reg_chnum_id)
19		
18		
17	SPDIFIN	Reserved
16	SPDIFIN	afifo overflow
15	SPDIFIN	cyc_cnt err, < min
14	SPDIFIN	cyc_cnt err, > max
13	SPDIFIN	parity_err
12	SPDIFIN	bit_cnt err, > 64
11	SPDIFIN	bit_cnt err, !=64
10	SPDIFIN	xyz_err
9	VAD	CHNUM_SYNC_ERR1: detect write new ch when pop buffer;
8	VAD	CHNUM_SYNC_ERR0: miss CH (cur_chnum_id != reg_chnum_id)
7		
6		
5		
4		
3		
2		
1		
0		

Table 11-248 EE_AUDIO_EXCEPTION_IRQ_STS0 0x380

Bits	R/W	Default	Description
31	R	0x0000-0000	change to high by irq; change to low by clr;

Amlogic Proprietary and Confidential
Copyright © Amlogic. All rights reserved.

Table 11-249 EE_AUDIO_EXCEPTION_IRQ_STS1 0x381

Bits	R/W	Default	Description
31	R	0x0000-0000	change to high by irq; change to low by clr;

Table 11-250 EE_AUDIO_EXCEPTION_IRQ_MASK0 0x382

Bits	R/W	Default	Description
31	R/W	0x0000-0000	

Table 11-251 EE_AUDIO_EXCEPTION_IRQ_MASK1 0x383

Bits	R/W	Default	Description
31	R/W	0x0000-0000	

Table 11-252 EE_AUDIO_EXCEPTION_IRQ_MODE0 0x384

Bits	R/W	Default	Description
31	R/W	0x0000-0000	each bit: 0: pulse irq; 1: level irq;

Table 11-253 EE_AUDIO_EXCEPTION_IRQ_MODE1 0x385

Bits	R/W	Default	Description
31	R/W	0x0000-0000	each bit: 0: pulse irq; 1: level irq;

Table 11-254 EE_AUDIO_EXCEPTION_IRQ_CLR0 0x386

Bits	R/W	Default	Description
31	R/W	0x0000-0000	each bit can clear each sts bit

Table 11-255 EE_AUDIO_EXCEPTION_IRQ_CLR1 0x387

Bits	R/W	Default	Description
31	R/W	0x0000-0000	each bit can clear each sts bit

Table 11-256 EE_AUDIO_EXCEPTION_IRQ_INV0 0x388

Bits	R/W	Default	Description
31	R/W	0x0000-0000	each bit can invert irq

Amlogic Proprietary and Confidential
Copyright © Amlogic. All rights reserved.

Table 11-257 EE_AUDIO_EXCEPTION_IRQ_INV1 0x389

Bits	R/W	Default	Description
31	R/W	0x0000-0000	each bit can invert irq

Table 11-258 EE_AUDIO_RSAMP_A_CHNUM_ID0 0x350

Bits	R/W	Default	Description
31:24	R/W	0x0000-0000	ID of ch3
23:16	R/W		ID of ch2
15:8	R/W		ID of ch1
7:0	R/W		ID of ch0

Table 11-259 EE_AUDIO_RSAMP_A_CHNUM_ID1 0x351

Bits	R/W	Default	Description
31:24	R/W	0x0000-0000	ID of ch7
23:16	R/W		ID of ch6
15:8	R/W		ID of ch5
7:0	R/W		ID of ch4

Table 11-260 EE_AUDIO_RSAMP_A_CHNUM_ID2 0x352

Bits	R/W	Default	Description
31:24	R/W	0x0000-0000	ID of ch11
23:16	R/W		ID of ch10
15:8	R/W		ID of ch9
7:0	R/W		ID of ch8

Table 11-261 EE_AUDIO_RSAMP_A_CHNUM_ID3 0x353

Bits	R/W	Default	Description
31:24	R/W	0x0000-0000	ID of ch15
23:16	R/W		ID of ch14
15:8	R/W		ID of ch13
7:0	R/W		ID of ch12

Amlogic Proprietary and Confidential
Copyright © Amlogic. All rights reserved.

Table 11-262 EE_AUDIO_RSAMP_A_CHNUM_ID4 0x354

Bits	R/W	Default	Description
31:24	R/W	0x0000-0000	ID of ch19
23:16	R/W		ID of ch18
15:8	R/W		ID of ch17
7:0	R/W		ID of ch16

Table 11-263 EE_AUDIO_RSAMP_A_CHNUM_ID5 0x355

Bits	R/W	Default	Description
31:24	R/W	0x0000-0000	ID of ch23
23:16	R/W		ID of ch22
15:8	R/W		ID of ch21
7:0	R/W		ID of ch20

Table 11-264 EE_AUDIO_RSAMP_A_CHNUM_ID6 0x356

Bits	R/W	Default	Description
31:24	R/W	0x0000-0000	ID of ch27
23:16	R/W		ID of ch26
15:8	R/W		ID of ch25
7:0	R/W		ID of ch24

Table 11-265 EE_AUDIO_RSAMP_A_CHNUM_ID7 0x357

Bits	R/W	Default	Description
31:24	R/W	0x0000-0000	ID of ch31
23:16	R/W		ID of ch30
15:8	R/W		ID of ch29
7:0	R/W		ID of ch28

Amlogic Proprietary and Confidential
Copyright © Amlogic. All rights reserved.

Table 11-266 EE_AUDIO_RSAMP_A_CHNUM_MASK 0x35E

Bits	R/W	Default	Description

23:16	R/W	0x0000-0000	for resample_C(B_old) stable mask, if set 1, will pull stable signal to low by different conditions
			bit3: resample_out_en changed(from 1 to 0 or from 0 to 1);
			bit2: reg_soft_reset = 1;
			bit1: resample_en_r changed(from 1 to 0 or from 0 to 1);
			bit0: resample_en changed(from 1 to 0 or from 0 to 1);

15:8	R/W		for resample_B stable mask, if set 1, will pull stable signal to low by different conditions
			bit3: reg_rsampl_en = 0;
			bit2: reg_rsamp_rst = 1;
			bit1: reg_output_en = 0;
			bit0:reg_module_bypass changed(from 0 to 1 or from 1 to 0)

7:0	R/W		for resample_A stable mask, if set 1, will pull stable signal to low by different conditions
			bit3: reg_rsampl_en = 0;
			bit2: reg_rsamp_rst = 1;
			bit1: reg_output_en = 0;
			bit0:reg_module_bypass changed(from 0 to 1 or from 1 to 0)

Table 11-267 EE_AUDIO_RSAMP_A_CHSYNC_CTRL 0x35F

Bits	R/W	Default	Description
31	R/W	0x0000-0000	bypass_n; 0: out=in; 1: sync data by chnum info;
30	R/W		sw_reset; 1: reset chnum_sync module
29	R/W		mode; 0: work as BUFF_MODE; 1: work as DROP_MODE;
28	R/W		id_se; 0: ID = input valid count; 1: ID= reg_id_***
27	R/W		fix_stable; 1: ignore stable info of input; 0: compensate dat by stable info;
26	R/W		debug_en0, for BUF_MODE only; 1: send chnum info from input; 0: generate new chnum info;
7:0	R/W		chnum_max; if input is 8ch, set this to 7;

EE_AUDIO_RSAMP_B_CHNUM_ID0 0x360

EE_AUDIO_RSAMP_B_CHNUM_ID1 0x361

EE_AUDIO_RSAMP_B_CHNUM_ID2 0x362

EE_AUDIO_RSAMP_B_CHNUM_ID3 0x363

EE_AUDIO_RSAMP_B_CHNUM_ID4 0x364

EE_AUDIO_RSAMP_B_CHNUM_ID5 0x365

EE_AUDIO_RSAMP_B_CHNUM_ID6 0x366

EE_AUDIO_RSAMP_B_CHNUM_ID7 0x367

EE_AUDIO_RSAMP_B_CHSYNC_CTRL 0x36F

Amlogic Proprietary and Confidential
Copyright © Amlogic. All rights reserved.

11.11.3 TODDR Registers

Table 11-268 EE_AUDIO_TODDR_A_CTRL0 0x40

Bits	R/W	Default	Description
31	R/W	0x0000-0000	reg_toddr_en, 0: disable; 1: enable;
29	R/W		reg_ext_signed, 0: select write to only one buff (start_addr,finish_addr); 1: select write to two buff (start_addr,finish_addr) (start_addrb, finish_addrb);
28	R/W		reg_toddr_endian
27	R/W		Enable_sync_chnum; 1: start store data when first ch ;
26:24	R/W		reg_toddr_int_en
23:16	R/W		[23] : reserved; [22] : reserved; [21] : fifo overflow, write when fifocnt = depth; [20] : fifo overflow, read when fifocnt = 0; [19] : when write to ddr "int_addr" data (only once); [18] : when write to ddr "int_addr" data (repeat); [17] : when write to ddr address match "int_addr"; [16]: when write to ddr address match "finish_addr";
15:13	R/W		reg_toddr_sel, 0: combined data[m:n] without gap; like S0[m:n],S1[m:n],S2[m:n], … 1: combined data[m:n] as 16bits; like {S0[11:0],4'd0},{S1[11:0],4'd0}… 2: combined data[m:n] as 16bits; like {4'd0,S0[11:0]},{4'd0,{S1[11:0]}… 3: combined data[m:n] as 32bits; like {S0[27:4],8'd0},{S1[27:4],8'd0}… 4: combined data[m:n] as 32bits; like {8'd0,S0[27:4]},{8'd0,{S1[27:4]}…
12:8	R/W		reg_toddr_m_sel, the msb positioin in data
7:3	R/W		reg_toddr_n_sel, the lsb position in data
2	R/W		Clear adr/cnt value which captured by vad frame sync
1	R/W		Clear adr/cnt value which captured by vadflag
0	R/W		Ddr bus ugt bit

Amlogic Proprietary and Confidential
Copyright © Amlogic. All rights reserved.

Table 11-269 EE_AUDIO_TODDR_A_CTRL1 0x41

Bits	R/W	Default	Description
30:26	R/W	0x0000-0000	Src select: 0: tdmin_a; 1: tdmin_b; 2: tdmin_c; 3: spdifin; 4: pdmin; 5: fratv; 6: tdmin_lb; 7: loopback_a; 8: frhdmirx_spdif; 9: loopback_b; 10: spdifin_lb; 11:earc_rx_dmac 12:frhdmirx_dsd 13:resample_a 14:resample_b 15: vad; 16~31:reserved
25	R/W		force_finish; the value from 0-> 1: force finish by current address and jump to start_address;
23:12	R/W		reg_fifo_start_rd_th, each time, when fifo_cnt greater than this register, control will start read data from fifo and write to DDR; write length is "reg_fifo_start_rd_th + 1" * 8bytes;
11:8	R/W		reg_status_sel, control status2 source;
7:0	R/W		reg_int_status_clr,clear each bits of int_status register

Table 11-270 EE_AUDIO_TODDR_A_START_ADDR 0x42

Bits	R/W	Default	Description
31:0	R/W	0x0000-0000	start_addr, buff_A start address, ignore [2:0]

Table 11-271 EE_AUDIO_TODDR_A_FINISH_ADDR 0x43

Bits	R/W	Default	Description
31:0	R/W	0x0000-0000	finish_addr, buff_A finish address, ignore [2:0]

Table 11-272 EE_AUDIO_TODDR_A_INT_ADDR 0x44

Bits	R/W	Default	Description
31:0	R/W	0x0000-0000	int_addr, usage A : as an address of interrupt; usage B : as a count of interrupt;

Table 11-273 EE_AUDIO_TODDR_A_STATUS1 0x45

Bits	R/W	Default	Description
25:23	R	0x0000-0000	stop_ddr_status
22	R		stop_ddr_done

Amlogic Proprietary and Confidential
Copyright © Amlogic. All rights reserved.

Bits	R/W	Default	Description
21	R		sel_b_true
20	R/W		sel_b
19:8	R/W		fifo count, the num in fifo
7:0	R/W		int_status, when irq generate, related bit will changed to 1 and can only clear by reg_int_status_clr

Table 11-274 EE_AUDIO_TODDR_A_STATUS2 0x46

Bits	R/W	Default	Description
31:0	R/W	0x0000-0000	status2, by reg_status_sel: 0: current ddr write address; 1: next finish address; 2: count by ddr reply, current ddr write address; 3: count by ddr reply, next finish address; 4: ddr address captured by vad flag; 5: ddr address captured by vad frame sync; 6: [31:16]: fifo_cnt captured by vad frame sync; [15:0]: fifo_cnt captured by vad flag; 8: ddr address captured by first vad flag; 9: ddr address captured by first vad frame sync;

Table 11-275 EE_AUDIO_TODDR_A_START_ADDRB 0x47

Bits	R/W	Default	Description
31:0	R/W	0x0000-0000	istart_addrb, buff_B start address, ignore [2:0]

Table 11-276 EE_AUDIO_TODDR_A_FINISH_ADDRB 0x48

Bits	R/W	Default	Description
31:0	R/W	0x0000-0000	finish_addrb, buff_B finish address, ignore [2:0]

Table 11-277 EE_AUDIO_TODDR_A_INIT_ADDR 0x49

Bits	R/W	Default	Description
31:0	R/W	0x0000-0000	initial address, the first ddr address after enable

Table 11-278 EE_AUDIO_TODDR_A_CTRL2 0x4a

Bits	R/W	Default	Description
31	R/W	0x0000-0000	Reserved for hold read. need set 1 before toddr_en =1, then TODDR will hold all data in FIFO. after sometime (etc. VAD detect), set it to 0, TODDR will start flush all data in FIFO to ddr.
30	R/W		reg_stop_ddr; if set from 0 to 1, will: step1: stop write data to FIFO; step2: stop sending request to DDR; step3: keep receiving data from DDR;

Amlogic Proprietary and Confidential
Copyright © Amlogic. All rights reserved.

Bits	R/W	Default	Description
			step4: compare request count and receive count; step5: done if two count matched;
29:28	R/W		Insert_chnum; 3: replace data[9:0] to chnum[9:0]; 2: replace data[3:0] to chnum[3:0]; 1: replace data[0] to chnum[0]; 0: not replace;
23:16	R/W		each bits will set to one interrupt, 0: pulse mode; 1: level mode;
11:0	R/W		Reserved for hold read start offset. when release hold read (bit31), the read point of fifo will equal to current write point + this reg +1. fifo width is 8 Bytes. so if input is 8ch*32bits, this register need set to 3/7/11/… if input is 32ch*32bits, this register need set to 15/31/47/…

Table 11-279 EE_AUDIO_TODDR_A_CHNUM_ID0 0x300

Bits	R/W	Default	Description
31:24	R/W	0x0000-0000	ID of ch3
23:16	R/W		ID of ch2
15:8	R/W		ID of ch1
7:0	R/W		ID of ch0

Table 11-280 EE_AUDIO_TODDR_A_CHNUM_ID1 0x301

Bits	R/W	Default	Description
31:24	R/W	0x0000-0000	ID of ch7
23:16	R/W		ID of ch6
15:8	R/W		ID of ch5
7:0	R/W		ID of ch4

Table 11-281 EE_AUDIO_TODDR_A_CHNUM_ID2 0x302

Bits	R/W	Default	Description
31:24	R/W	0x0000-0000	ID of ch11
23:16	R/W		ID of ch10
15:8	R/W		ID of ch9
7:0	R/W		ID of ch8

Amlogic Proprietary and Confidential
Copyright © Amlogic. All rights reserved.

Table 11-282 EE_AUDIO_TODDR_A_CHNUM_ID3 0x303

Bits	R/W	Default	Description
31:24	R/W	0x0000-0000	ID of ch15
23:16	R/W		ID of ch14
15:8	R/W		ID of ch13
7:0	R/W		ID of ch12

Table 11-283 EE_AUDIO_TODDR_A_CHNUM_ID4 0x304

Bits	R/W	Default	Description
31:24	R/W	0x0000-0000	ID of ch19
23:16	R/W		ID of ch18
15:8	R/W		ID of ch17
7:0	R/W		ID of ch16

Table 11-284 EE_AUDIO_TODDR_A_CHNUM_ID5 0x305

Bits	R/W	Default	Description
31:24	R/W	0x0000-0000	ID of ch23
23:16	R/W		ID of ch22
15:8	R/W		ID of ch21
7:0	R/W		ID of ch20

Table 11-285 EE_AUDIO_TODDR_A_CHNUM_ID6 0x306

Bits	R/W	Default	Description
31:24	R/W	0x0000-0000	ID of ch27
23:16	R/W		ID of ch26
15:8	R/W		ID of ch25
7:0	R/W		ID of ch24

Table 11-286 EE_AUDIO_TODDR_A_CHNUM_ID7 0x307

Bits	R/W	Default	Description
31:24	R/W	0x0000-0000	ID of ch31
23:16	R/W		ID of ch30
15:8	R/W		ID of ch29
7:0	R/W		ID of ch28

Amlogic Proprietary and Confidential
Copyright © Amlogic. All rights reserved.

Table 11-287 EE_AUDIO_TODDR_A_CHSYNC_CTRL 0x30F

Bits	R/W	Default	Description
31	R/W	0x0000-0000	bypass_n; 0: out=in; 1: sync data by chnum info;
30	R/W		sw_reset; 1: reset chnum_sync module
29	R/W		mode; 0: work as BUFF_MODE; 1: work as DROP_MODE;
28	R/W		id_se; 0: ID = input valid count; 1: ID= reg_id_***
27	R/W		fix_stable; 1: ignore stable info of input; 0: compensate dat by stable info;
26	R/W		debug_en0, for BUF_MODE only; 1: send chnum info from input; 0: generate new chnum info;
7:0	R/W		chnum_max; if input is 8ch, set this to 7;

EE_AUDIO_TODDR_B_CTRL0 0x50

EE_AUDIO_TODDR_B_CTRL1 0x51

EE_AUDIO_TODDR_B_START_ADDR 0x52

EE_AUDIO_TODDR_B_FINISH_ADDR 0x53

EE_AUDIO_TODDR_B_INT_ADDR 0x54

EE_AUDIO_TODDR_B_STATUS1 0x55

EE_AUDIO_TODDR_B_STATUS2 0x56

EE_AUDIO_TODDR_B_START_ADDRB 0x57

EE_AUDIO_TODDR_B_FINISH_ADDR 0x58

EE_AUDIO_TODDR_B_INIT_ADDR 0x59

EE_AUDIO_TODDR_B_CTRL2 0x5a

EE_AUDIO_TODDR_B_CHNUM_ID0 0x310

EE_AUDIO_TODDR_B_CHNUM_ID1 0x311

EE_AUDIO_TODDR_B_CHNUM_ID2 0x312

EE_AUDIO_TODDR_B_CHNUM_ID3 0x313

EE_AUDIO_TODDR_B_CHNUM_ID4 0x314

EE_AUDIO_TODDR_B_CHNUM_ID5 0x315

EE_AUDIO_TODDR_B_CHNUM_ID6 0x316

EE_AUDIO_TODDR_B_CHNUM_ID7 0x317

EE_AUDIO_TODDR_B_CHSYNC_CTRL 0x31F

EE_AUDIO_TODDR_C_CTRL0 0x60

EE_AUDIO_TODDR_C_CTRL1 0x61

EE_AUDIO_TODDR_C_START_ADDR 0x62

EE_AUDIO_TODDR_C_FINISH_ADDR 0x63

Amlogic Proprietary and Confidential
Copyright © Amlogic. All rights reserved.

EE_AUDIO_TODDR_C_INT_ADDR 0x64
EE_AUDIO_TODDR_C_STATUS1 0x65
EE_AUDIO_TODDR_C_STATUS2 0x66
EE_AUDIO_TODDR_C_START_ADDRB 0x67
EE_AUDIO_TODDR_C_FINISH_ADDR 0x68
EE_AUDIO_TODDR_C_INIT_ADDR 0x69
EE_AUDIO_TODDR_C_CTRL2 0x6a
EE_AUDIO_TODDR_C_CHNUM_ID0 0x320
EE_AUDIO_TODDR_C_CHNUM_ID1 0x321
EE_AUDIO_TODDR_C_CHNUM_ID2 0x322
EE_AUDIO_TODDR_C_CHNUM_ID3 0x323
EE_AUDIO_TODDR_C_CHNUM_ID4 0x324
EE_AUDIO_TODDR_C_CHNUM_ID5 0x325
EE_AUDIO_TODDR_C_CHNUM_ID6 0x326
EE_AUDIO_TODDR_C_CHNUM_ID7 0x327
EE_AUDIO_TODDR_C_CHSYNC_CTRL 0x32F

EE_AUDIO_TODDR_D_CTRL0 0x210
EE_AUDIO_TODDR_D_CTRL1 0x211
EE_AUDIO_TODDR_D_START_ADDR 0x212
EE_AUDIO_TODDR_D_FINISH_ADDR 0x213
EE_AUDIO_TODDR_D_INT_ADDR 0x214
EE_AUDIO_TODDR_D_STATUS1 0x215
EE_AUDIO_TODDR_D_STATUS2 0x216
EE_AUDIO_TODDR_D_START_ADDRB 0x217
EE_AUDIO_TODDR_D_FINISH_ADDR 0x218
EE_AUDIO_TODDR_D_INIT_ADDR 0x219
EE_AUDIO_TODDR_D_CTRL2 0x21a
EE_AUDIO_TODDR_D_CHNUM_ID0 0x330
EE_AUDIO_TODDR_D_CHNUM_ID1 0x331
EE_AUDIO_TODDR_D_CHNUM_ID2 0x332
EE_AUDIO_TODDR_D_CHNUM_ID3 0x333
EE_AUDIO_TODDR_D_CHNUM_ID4 0x334
EE_AUDIO_TODDR_D_CHNUM_ID5 0x335
EE_AUDIO_TODDR_D_CHNUM_ID6 0x336
EE_AUDIO_TODDR_D_CHNUM_ID7 0x337
EE_AUDIO_TODDR_D_CHSYNC_CTRL 0x33F

Amlogic Proprietary and Confidential
Copyright © Amlogic. All rights reserved.

11.11.4 FRDDR Registers

Table 11-288 EE_AUDIO_FRDDR_A_CTRL0 0x70

Bits	R/W	Default	Description
31	R/W	0x0000-0000	reg_frddr_en, 0: disable; 1: enable;
30	R/W		reg_frddr_pp_mode, 0: select write to only one buff (start_addr,finish_addr); 1: select write to two buff (start_addr,finish_addr) (start_addrb, finish_addrb);
26:24	R/W		reg_frdd_endian
23:16	R/W		reg_frddr_int_en, [23] : reserved; [22] : reserved; [21] : fifo overflow, write when fifocnt = depth; [20] : fifo overflow, read when fifocnt = 0; [19] : first time when read from ddr "int_addr" data(only once); [18] : once time when read from ddr "int_addr" data(repeat); [17] : when read from ddr address match "int_addr"; [16]: when read from ddr address match "finish_addr";
15:12	R/W		reg_frddr_ack_dly, add delay to frddr ack
0	R/W		Ddr bus ugt setting.

Table 11-289 EE_AUDIO_FRDDR_A_CTRL1 0x71

Bits	R/W	Default	Description
31:24	R/W	0x0000-0000	reg_fifo_depth, the max depth of fifo; for high bit rates like 384k*32bits*8ch, set this register higher; for low bit rates like 48k*32bits*2ch, set this register lower;
23:16			reg_fifo_start_wr_th, when the fifo cnt less than "reg_fifo_depth - reg_fifo_start_wr_th", start reqeuest and read data from DDR; each time "reg_fifo_start_wr_th" * 8 bytes data;
12			force finish; when the value changed from 0 to 1; will finished by current address and jump to start address;
11:8			reg_status_sel, control status2 source;
7:0			reg_int_status_clr, clear each bits of int_status register

Table 11-290 EE_AUDIO_FRDDR_A_START_ADDR 0x72

Bits	R/W	Default	Description
31:0	R/W	0x0000-0000	start_addr,buff_B start address

Table 11-291 EE_AUDIO_FRDDR_A_FINISH_ADDR 0x73

Bits	R/W	Default	Description
31:0	R/W	0x0000-0000	finish_addr,buff_B finish address

Amlogic Proprietary and Confidential
Copyright © Amlogic. All rights reserved.

Table 11-292 EE_AUDIO_FRDDR_A_INT_ADDR 0x74

Bits	R/W	Default	Description
31:0	R/W	0x0000-0000	int_addr,usage A : as an address of interrupt; usage B : as a count of interrupt;

Table 11-293 EE_AUDIO_FRDDR_A_STATUS1 0x75

Bits	R/W	Default	Description
22:20	R	0x0000-0000	stop_ddr status
19	R		r_selb_true
18	R		r_selb
17	R		stop_ddr_done
16:8	R/W		fifo count, the num in fifo
7:0	R/W		int_status, when irq generate, related bit will changed to 1 and can only clear by reg_int_status_clr

Table 11-294 EE_AUDIO_FRDDR_A_STATUS2 0x76

Bits	R/W	Default	Description
31:0	R/W	0x0000-0000	status2, by reg_status_sel: 0: current ddr write address; 1: next finish address; 2: count by ddr reply, current ddr write address; 3: count by ddr reply, next finish address;

The same design as TODDR:

We can generate 8 irq and add them together to CPU.

Then can read int_status to know which irq it is.

EE_AUDIO_FRDDR_A_START_ADDRB 0x77

EE_AUDIO_FRDDR_A_FINISH_ADDRB 0x78

The same design as TODDR:

We have an internal register to store reg_start_adr and reg_finish_adr.

We call them as r_start_adr and r_finish_adr;

Each time, when curr_adr match r_finish_adr, curr_adr will jump to r_start_adr , then update r_start_adr and r_finish_adr;

That means SW can write new start adr and finish adr before curr_adr match old finish adr .

EE_AUDIO_FRDDR_A_INIT_ADDR 0x79

Amlogic Proprietary and Confidential
Copyright © Amlogic. All rights reserved.

Table 11-295 EE_AUDIO_FRDDR_A_CTRL2 0x7a

Bits	R/W	Default	Description
31:24	R/W	0x0000-0000	ch num for share buffer feature; if needn't share buffer, set it as 0; if need share buffer , set it as TDMOUT/SPDIFOUT ch number;
21	R/W		reg_stop_ddr; if set from 0 to 1, will: step1: stop write data to FIFO; step2: stop sending to DDR; step3: keep receiving data from DDR; step4: compare count and receive count; step5: done if two count matched;
20	R/W		Src_sel2_en
19	R/W		Src_sel2_eq; 1: select from EQDRC; 0: select from TDMOUT/SPDIFOUT;
18:16	R/W		Src_sel2; 0: tdmout_a; 1: tdmout_b; 2: tdmout_c; 3: spdifout; 4: spdifout_b; 5: reserved; 6: reserved; 7: reserved;
12	R/W		Src_sel1_en
11	R/W		Src_sel1_eq; 1: select from EQDRC; 0: select from TDMOUT/SPDIFOUT;
10:8	R/W		Src_sel1; 0: tdmout_a; 1: tdmout_b; 2: tdmout_c; 3: spdifout; 4: spdifout_b; 5: reserved; 6: reserved; 7: reserved;
4	R/W		Src_sel0_en
3	R/W		Src_sel0_eq; 1: select from EQDRC; 0: select from TDMOUT/SPDIFOUT;
2:0	R/W		Src_sel0; 0: tdmout_a; 1: tdmout_b; 2: tdmout_c; 3: spdifout; 4: spdifout_b; 5: reserved; 6: reserved; 7: reserved;

EE_AUDIO_FRDDR_B_CTRL0 0x80

EE_AUDIO_FRDDR_B_CTRL1 0x81

EE_AUDIO_FRDDR_B_START_ADDR 0x82

EE_AUDIO_FRDDR_B_FINISH_ADDR 0x83

EE_AUDIO_FRDDR_B_INT_ADDR 0x84

EE_AUDIO_FRDDR_B_STATUS1 0x85

EE_AUDIO_FRDDR_B_STATUS2 0x86

Amlogic Proprietary and Confidential
Copyright © Amlogic. All rights reserved.

EE_AUDIO_FRDDR_B_START_ADDRB 0x87
EE_AUDIO_FRDDR_B_FINISH_ADDR 0x88
EE_AUDIO_FRDDR_B_INIT_ADDR 0x89
EE_AUDIO_FRDDR_B_CTRL2 0x8a

EE_AUDIO_FRDDR_C_CTRL0 0x90
EE_AUDIO_FRDDR_C_CTRL1 0x91
EE_AUDIO_FRDDR_C_START_ADDR 0x92
EE_AUDIO_FRDDR_C_FINISH_ADDR 0x93
EE_AUDIO_FRDDR_C_INT_ADDR 0x94
EE_AUDIO_FRDDR_C_STATUS1 0x95
EE_AUDIO_FRDDR_C_STATUS2 0x96
EE_AUDIO_FRDDR_C_START_ADDRB 0x97
EE_AUDIO_FRDDR_C_FINISH_ADDR 0x98
EE_AUDIO_FRDDR_C_INIT_ADDR 0x99
EE_AUDIO_FRDDR_C_CTRL2 0x9a

EE_AUDIO_FRDDR_D_CTRL0 0x220
EE_AUDIO_FRDDR_D_CTRL1 0x221
EE_AUDIO_FRDDR_D_START_ADDR 0x222
EE_AUDIO_FRDDR_D_FINISH_ADDR 0x223
EE_AUDIO_FRDDR_D_INT_ADDR 0x224
EE_AUDIO_FRDDR_D_STATUS1 0x225
EE_AUDIO_FRDDR_D_STATUS2 0x226
EE_AUDIO_FRDDR_D_START_ADDRB 0x227
EE_AUDIO_FRDDR_D_FINISH_ADDR 0x228
EE_AUDIO_FRDDR_D_INIT_ADDR 0x229
EE_AUDIO_FRDDR_D_CTRL2 0x22a

11.11.5 DDR ARB Registers

Table 11-296 EE_AUDIO_ARB_CTRL0 0xa0

Bits	R/W	Default	Description
31	R/W	0x0000-0000	reg_arb_en, 0:disable; 1: enable;
30	R/W		reg_clr_lock_clk_cnt, 1: clear clk_cnt of lock status;
29	R/W		reg_unlock; 1: will reset the status of DDR arbiter to IDLE;

Amlogic Proprietary and Confidential
Copyright © Amlogic. All rights reserved.

Bits	R/W	Default	Description
28	R/W		reg_unlock_no_async; 0: will clear status of DDR ASYNC when set reg_unlock to 1;
27	R/W		reg_reset_async; 1: will reset DDR_ASYNC module;
22:20	R/W		reg_sts_sel, refer to ARB_STS;
15:0	R/W		reg_arb_mask, [9]: frddr_e; [8]: toddr_e; [7]: frddr_d; [6]: frddr_c; [5]: frddr_b; [4]: frddr_a; [3]: toddr_d; [2]: toddr_c; [1]: toddr_b; [0]: toddr_a;

Table 11-297 EE_AUDIO_ARB_CTRL1 0xa1

Bits	R/W	Default	Description
15:0	R/W	0x0000-0000	reg_lock_timeout_cnt; will generate exception irq if clk_cnt of locked sts greater than this register;

Table 11-298 EE_AUDIO_ARB_STS 0xa8

Bits	R/W	Default	Description
31:0	R	0x0000-0000	reg_sts_sel = 0: bit31: r_locked; mean arbiter is locked; bit30: c_usr_dc_rdy; mean DDR ASYNC is ready; bit27:22: rd_cnt; mean DDR ASYNC stored read command count; bit21:16: wr_cnt; mean DDR ASYNC stored write command count; bit15:0: r_req_sel; mean arbiter grant to which request; reg_sts_sel = 1: bit31:16: c_req_sel; mean request status; bit15:0 : r_lock_clk_cnt; mean how long locked this time; reg_sts_sel = 2: bit31:16: lock_clk_cnt_max; bit15:0: lock_clk_cnt_min; reg_sts_sel = 3: bit31:28: cnt_id0; bit27:24: cnt_id1; bit23:20: cnt_id2; bit19:16: cnt_id3; bit15:12: cnt_id4; bit11:8: cnt_id5; bit7:4: cnt_id6; bit3:0: cnt_id7; reg_sts_sel = 4: bit31:28: cnt_id8; bit27:24: cnt_id9; bit23:20: cnt_id10; bit19:16: cnt_id11; bit15:12: cnt_id12; bit11:8: cnt_id13; bit7:4: cnt_id14; bit3:0: cnt_id15;

Amlogic Proprietary and Confidential
Copyright © Amlogic. All rights reserved.

11.11.6 LoopBack Registers

Table 11-299 EE_AUDIO_LB_A_CTRL0 0xb0

Bits	R/W	Default	Description
31	R/W	0x0000-0000	reg_lb_en, 0:disable; 1: enable;
30	R/W		reg_lb_mode, 0: out rate = in data rate; 1: out rate = loopback data rate;
29	R/W		reg_ext_signed, 0: extend bits as "0"; 1: extend bits as "msb";
28	R/W		Enable_sync_chnum; 1: start store data when ch_num can match ID;
27	R/W		chnum_sel; 0: chnum[4:0] is fixed value: 0-1-2-…31; 1: chnum[4:0] is valid_cnt; the different is bace mask set;
17:16	R/W		Reg_sts_sel, refer to REG_LB_STATUS.
15:13	R/W		reg_dat_sel, shift [m:n] to [31:0]; 0: right justified, out = { ext,[m:n]}; 1: left justified, out = {[m:n],all0}; 2: right justified, out = { ext,[m:n]}; 3: left justified, out = {[m:n],all0}; 4: right justified, out = { ext,[m:n]};
12:8	R/W		reg_dat_m_sel, the msb position in data
7:3	R/W		reg_dat_n_sel, the lsb position in data

Table 11-300 EE_AUDIO_LB_A_CTRL1 0xb1

Bits	R/W	Default	Description
29	R/W		reg_lb_ext_signed, 0: extend bits as "0"; 1: extend bits as "msb";
28	R/W		Enable_sync_chnum; 1: start store data when ch_num can match ID;
27	R/W		hold_insertion 1: hold insert data store(update) and insert 0 after original data;
26	R/W		mute_insertern 1: set insert data to mute_insert_val;
24:16			the error condition which can pull stable signal down; 24: orig_sotre_cnt_err; start store with cnt!=0; 23: insert_store_cnt_err; start store with cnt!=0; 22: orig_store_err1; start store but not first ch 21: orig_store_err2; storing but receive first ch 20: insert_store_err1; start store but not first ch 19: insert_store_err2; storing but receive first ch 18: output_en_err; start send when output is not finish; 17: pipe_cnt_err1; cnt> 3; 16: pipe_cnt_err2; cnt< 0;
15:13			reg_lb_sel, shift [m:n] to [31:0]; 0: right justified, out = {ext,[m:n]}; 1: left justified, out = {[m:n],all0}; 2: right justified, out = { ext,[m:n]}; 3: left justified, out = {[m:n],all0};

Amlogic Proprietary and Confidential
Copyright © Amlogic. All rights reserved.

Bits	R/W	Default	Description
			4: right justified, out = { ext,[m:n]};
12:8			reg_lb_m_sel, the msb position loopback data
7:3			reg_lb_n_sel, the lsb position loopback data

Table 11-301 EE_AUDIO_LB_A_CTRL2 0xb2

Bits	R/W	Default	Description
31:28	R/W		insert_fifo_thd insert fifo start work thd
27	R/W		insert_fifo_mode 1.enable insert path fifo mode
26	R/W		insert_fifo_init 1.initial insert fifo
25	R/W		fifo_noclk_gate
24:20	R/W	0x0000-0000	data Src select: 0: tdmin_a; 1: tdmin_b; 2: tdmin_c; 3: spdifin; 4: pdmin; 5: fratv; 6: tdmin_lb; 7: loopback_a; 8: frhdmirx_spdif; 9: loopback_b; 10: spdifin_lb; 11:earc_rx_dmac 12:frhdmirx_dsd 13:resample_a 14:resample_b 15: vad; 16~31:reserved
19:16	R/W		Dat_ch_num, max channel number of data source; max is 15 (equal 16 ch)
15:0	R/W		Dat_ch_mask, 16bits match 16 ch, set 1 will sending out, set0 will drop off this ch;

Amlogic Proprietary and Confidential
Copyright © Amlogic. All rights reserved.

Table 11-302 EE_AUDIO_LB_A_CTRL3 0xb3

Bits	R/W	Default	Description
24:20	R/W	0x0000-0000	LB Src select: 0: tdmin_a; 1: tdmin_b; 2: tdmin_c; 3: spdifin; 4: pdmin; 5: fratv; 6: tdmin_lb; 7: loopback_a; 8: frhdmirx_spdif; 9: loopback_b; 10: spdifin_lb; 11:earc_rx_dmac 12:frhdmirx_dsd 13:resample_a 14:resample_b 15: vad; 16~31:reserved
19:16	R/W		Lb_ch_num, max channel number of data source; max is 15 (equal 16 ch)
15:0	R/W		Lb_ch_mask, 16bits match 16 ch, set 1 will sending out, set0 will drop off this ch;

Table 11-303 EE_AUDIO_ LB_A_DAT_ID0 0xb4

Bits	R/W	Default	Description
31:24	R/W	0x0000-0000	data_ch7_id
23:16	R/W		data_ch6_id
15:8	R/W		data_ch5_id
7:0	R/W		data_ch4_id

Table 11-304 EE_AUDIO_LB_A_DAT_ID1 0xb5

Bits	R/W	Default	Description
31:24	R/W	0x0000-0000	data_ch3_id
23:16	R/W		data_ch2_id
15:8	R/W		data_ch1_id
7:0	R/W		data_ch0_id

Table 11-305 EE_AUDIO_LB_A_DAT_ID2 0xb6

Bits	R/W	Default	Description
31:24	R/W	0x0000-0000	data_ch11_id
23:16	R/W		data_ch10_id
15:8	R/W		data_ch9_id
7:0	R/W		data_ch8_id

Amlogic Proprietary and Confidential
Copyright © Amlogic. All rights reserved.

Table 11-306 EE_AUDIO_LB_A_DAT_ID3 0xb7

Bits	R/W	Default	Description
31:24	R/W	0x0000-0000	data_ch15_id
23:16	R/W		data_ch14_id
15:8	R/W		data_ch13_id
7:0	R/W		data_ch12_id

Table 11-307 EE_AUDIO_LB_A_ID0 0xb8

Bits	R/W	Default	Description
31:24	R/W	0x0000-0000	lb_data_ch7_id
23:16	R/W		lb_data_ch6_id
15:8	R/W		lb_data_ch5_id
7:0	R/W		lb_data_ch4_id

Table 11-308 EE_AUDIO_LB_A _ID1 0xb9

Bits	R/W	Default	Description
31:24	R/W	0x0000-0000	lb_data_ch3_id
23:16	R/W		lb_data_ch2_id
15:8	R/W		lb_data_ch1_id
7:0	R/W		lb_data_ch0_id

Table 11-309 EE_AUDIO_LB_A _ID2 0xba

Bits	R/W	Default	Description
31:24	R/W	0x0000-0000	lb_data_ch11_id
23:16	R/W		lb_data_ch10_id
15:8	R/W		lb_data_ch9_id
7:0	R/W		lb_data_ch8_id

Table 11-310 EE_AUDIO_LB_A _ID3 0xbb

Bits	R/W	Default	Description
31:24	R/W	0x0000-0000	lb_data_ch15_id
23:16	R/W		lb_data_ch14_id

Amlogic Proprietary and Confidential
Copyright © Amlogic. All rights reserved.

Bits	R/W	Default	Description
15:8	R/W		lb_data_ch13_id
7:0	R/W		lb_data_ch12_id

Table 11-311 EE_AUDIO_LB_A _STS 0xbc

Bits	R/W	Default	Description
31:0	R	0x0000-0000	reg_sts_sel = 0: [31:0] = 0; reg_sts_sel = 1: [31]:pipe_cnt_err2; mean pipe cnt decr when it's 0; [30]:pipe_cnt_err1; mean pipe cnt incr when it's 3; [29:28]:pipe_cnt; current pipe cnt value; [27]:output_en_err; when output, received a new start; [26]:insert_storing_err2; it it's receiving, but received first ch; [25]:insert_storing_err1, if it's not receiving, but received data [24]:orig_storing_err2; it it's receiving, but received first ch; [23]:orig_storing_err1, if it's not receiving, but received data [22]:1st_send_done, mean finished first time send insert data; [21]:insert_storing, mean it's receiving insert data now; [20]:orig_storing, mean it's receiving insert data now; [19]:insert_store_cnt_err, when first_ch, if store_cnt is not 0, mean error, missed ch or another reason; [9]:orig_store_cnt_err, when first_ch, if store_cnt is not 0, mean error, missed ch or another reason; reg_sts_sel = 2: [31:0]:insert_store_cnt_debug, when start sending data, stored insert dat ch number; reg_sts_sel = 3: [31:0]:orig_store_cnt_debug, when start sending data, stored orig dat ch number;

Table 11-312 EE_AUDIO_LB_A_CHSYNC_CTRL_INSERT 0xbd

Bits	R/W	Default	Description
31	R/W	0x0000-0000	bypass_n; 0: out=in; 1: enable sync mode;
30	R/W		sw_reset; 1: reset status;
29	R/W		mode_sel; 0: buf sync mode; 1: drop sync mode;
28	R/W		id_sel; 0: by int_cnt; 1: by reg_chnum_id;
27	R/W		fix_stable; 1: will not pull stable low if detect any error;
26	R/W		debug_en0; for buf sync mode only; 0: send new chnum which generated by chnum_sync; 1: send old chnum from buff;
7:0	R/W		chnum_max; if receive 8 ch data, set it to 7;

Amlogic Proprietary and Confidential
Copyright © Amlogic. All rights reserved.

Table 11-313 EE_AUDIO_LB_A_CHSYNC_CTRL_ORIG 0xbe

Bits	R/W	Default	Description
31	R/W	0x0000-0000	bypass_n; 0: out=in; 1: enable sync mode;
30	R/W		sw_reset; 1: reset status;
29	R/W		mode_sel; 0: buf sync mode; 1: drop sync mode;
28	R/W		id_sel; 0: by int_cnt; 1: by reg_chnum_id;
27	R/W		fix_stable; 1: will not pull stable low if detect any error;
26	R/W		debug_en0; for buf sync mode only; 0: send new chnum which generated by chnum_sync; 1: send old chnum from buff;
7:0	R/W		chnum_max; if receive 8 ch data, set it to 7;

Table 11-314 EE_AUDIO_LB_A_CTRL4 0xbf

Bits	R/W	Default	Description
24:20	R/W	0x0000-0000	mute_insert_val

EE_AUDIO_LB_B_CTRL0 0x230

EE_AUDIO_LB_B_CTRL1 0x231

EE_AUDIO_LB_B_CTRL2 0x232

EE_AUDIO_LB_B_CTRL3 0x233

EE_AUDIO_ LB_B_DAT_ID0 0x234

EE_AUDIO_LB_B_DAT_ID1 0x235

EE_AUDIO_LB_B_DAT_ID2 0x236

EE_AUDIO_LB_B_DAT_ID3 0x237

EE_AUDIO_LB_B_ID0 0x238

EE_AUDIO_LB_B_ID1 0x239

EE_AUDIO_LB_B_ID2 0x23a

EE_AUDIO_LB_B_ID3 0x23b

EE_AUDIO_LB_B_STS 0x23c

EE_AUDIO_LB_B_CHSYNC_CTRL_INSERT 0x23d

EE_AUDIO_LB_B_CHSYNC_CTRL_ORIG 0x23e

EE_AUDIO_LB_B_CTRL4 0x2bf

Amlogic Proprietary and Confidential
Copyright © Amlogic. All rights reserved.

11.11.7 TDM Registers

TDMin_B/C are the same as TDMin_A.

TDMout_B/C are the same as TDMout_A.

TDMin_LB is the same as TDMin_A.

TDM IN & OUT are independent , so need select MCLK/SCLK/LRCLK/DATIN/DATOUT in audio after set CHIP_PIN_MUX.

These pins are from/to CHIP_PIN_MUX module.

MCLK	2	output
SCLK_MST/SLV	3	input/output
LRCLK_MST/SLV	3	input/output
DAT	32	input/output

Sources of pad_aud_dat_out are:

bit	src	bit	src	bit	src	bit	src
31	0	23	TDMOUT_C bit7	15	TDMOUT_B bit7	7	TDMOUT_A bit7
30	0	22	TDMOUT_C bit6	14	TDMOUT_B bit6	6	TDMOUT_A bit6
29	0	21	TDMOUT_C bit5	13	TDMOUT_B bit5	5	TDMOUT_A bit5
28	0	20	TDMOUT_C bit4	12	TDMOUT_B bit4	4	TDMOUT_A bit4
27	0	19	TDMOUT_C bit3	11	TDMOUT_B bit3	3	TDMOUT_A bit3
26	0	18	TDMOUT_C bit2	10	TDMOUT_B bit2	2	TDMOUT_A bit2
25	0	17	TDMOUT_C bit1	9	TDMOUT_B bit1	1	TDMOUT_A bit1
24	0	16	TDMOUT_C bit0	8	TDMOUT_B bit0	0	TDMOUT_A bit0

Table 11-315 EE_AUDIO_MCLK_PAD_CTRL0 0x3A0

Bits	R/W	Default	Description
31	R/W	0	mclk_pad_1_en;
30	R/W	0	mclk_pad_1, force to xtal;
26:24	R/W	0	mclk _pad_1_sel: 0: mclk_a; 1: mclk_b; 2: mclk_c; 3: mclk_d; 4: mclk_e; 5: mclk_f;

Amlogic Proprietary and Confidential
Copyright © Amlogic. All rights reserved.

Bits	R/W	Default	Description
23:16	R/W	0	Mclk_pad_1_div: the mclk_pad will div by mclk source; set 7 if need div8
15	R/W	0	mclk_pad_0_en
14	R/W	0	mclk_pad_0, force to xtal;
10:8	R/W	0	mclk _pad_0_sel: 0: mclk_a; 1: mclk_b; 2: mclk_c; 3: mclk_d; 4: mclk_e; 5: mclk_f;
7:0	R/W	0	Mclk_pad_0_div: the mclk_pad will div by mclk source; set 7 if need div8

Table 11-316 EE_AUDIO_MCLK_PAD_CTRL1 0x3A1

Bits	R/W	Default	Description
15	R/W	0	mclk_pad_2_en
14	R/W	0	mclk_pad_2, force to xtal;
10:8	R/W	0	mclk _pad_2_sel: 0: mclk_a; 1: mclk_b; 2: mclk_c; 3: mclk_d; 4: mclk_e; 5: mclk_f;
7:0	R/W	0	Mclk_pad_2_div: the mclk_pad will div by mclk source; set 7 if need div8

Table 11-317 EE_AUDIO_SCLK_PAD_CTRL0 0x3A2

Bits	R/W	Default	Description
23	R/W	0	sclk_pad_4_oen: 0: pad work as output; 1: pad work as input;
22:20	R/W	0	sclk_pad_4_sel(when it's output): 0: mst_sclk_a; 1: mst_sclk_b; 2: mst_sclk_c; 3: mst_sclk_d; 4: mst_sclk_e; 5: mst_sclk_f;
19	R/W	0	sclk_pad_3_oen: 0: pad work as output; 1: pad work as input;
18:16	R/W	0	sclk_pad_3_sel(when it's output): 0: mst_sclk_a; 1: mst_sclk_b; 2: mst_sclk_c; 3: mst_sclk_d;

Amlogic Proprietary and Confidential
Copyright © Amlogic. All rights reserved.

Bits	R/W	Default	Description
			4: mst_sclk_e; 5: mst_sclk_f;
11	R/W	0	sclk_pad_2_oen: 0: pad work as output; 1: pad work as input;
10:8	R/W	0	sclk_pad_2_sel(when it's output): 0: mst_sclk_a; 1: mst_sclk_b; 2: mst_sclk_c; 3: mst_sclk_d; 4: mst_sclk_e; 5: mst_sclk_f;
7	R/W	0	sclk_pad_1_oen: 0: pad work as output; 1: pad work as input;
6:4	R/W	0	sclk_pad_1_sel(when it's output): 0: mst_sclk_a; 1: mst_sclk_b; 2: mst_sclk_c; 3: mst_sclk_d; 4: mst_sclk_e; 5: mst_sclk_f;
3	R/W	0	sclk_pad_0_oen: 0: pad work as output; 1: pad work as input;
2:0	R/W	0	sclk_pad_0_sel(when it's output): 0: mst_sclk_a; 1: mst_sclk_b; 2: mst_sclk_c; 3: mst_sclk_d; 4: mst_sclk_e; 5: mst_sclk_f;

Table 11-318 EE_AUDIO_SCLK_PAD_CTRL1 0x3A3

Bits	R/W	Default	Description
23	R/W	0	lrclk_pad_4_oen: 0: pad work as output; 1: pad work as input;
22:20	R/W	0	lrclk_pad_4_sel(when it's output): 0: mst_lrclk_a; 1: mst_lrclk_b; 2: mst_lrclk_c; 3: mst_lrclk_d; 4: mst_lrclk_e; 5: mst_lrclk_f;
19	R/W	0	lrclk_pad_3_oen: 0: pad work as output; 1: pad work as input;
18:16	R/W	0	lrclk_pad_3_sel(when it's output): 0: mst_lrclk_a; 1: mst_lrclk_b; 2: mst_lrclk_c; 3: mst_lrclk_d; 4: mst_lrclk_e; 5: mst_lrclk_f;

Amlogic Proprietary and Confidential
Copyright © Amlogic. All rights reserved.

Bits	R/W	Default	Description
11	R/W	0	lrclk_pad_2_oen: 0: pad work as output; 1: pad work as input;
10:8	R/W	0	lrclk_pad_2_sel(when it's output): 0: mst_lrclk_a; 1: mst_lrclk_b; 2: mst_lrclk_c; 3: mst_lrclk_d; 4: mst_lrclk_e; 5: mst_lrclk_f;
7	R/W	0	lrclk_pad_1_oen: 0: pad work as output; 1: pad work as input;
6:4	R/W	0	lrclk_pad_1_sel(when it's output): 0: mst_lrclk_a; 1: mst_lrclk_b; 2: mst_lrclk_c; 3: mst_lrclk_d; 4: mst_lrclk_e; 5: mst_lrclk_f;
3	R/W	0	lrclk_pad_0_oen: 0: pad work as output; 1: pad work as input;
2:0	R/W	0	lrclk_pad_0_sel(when it's output): 0: mst_lrclk_a; 1: mst_lrclk_b; 2: mst_lrclk_c; 3: mst_lrclk_d; 4: mst_lrclk_e; 5: mst_lrclk_f;

Table 11-319 EE_AUDIO_DAT_PAD_CTRL0 0x390

Bits	R/W	Default	Description
28:24	R/W	0	tdmin_a dat_in bit3 sel
20:16	R/W	0	tdmin_a dat_in bit2 sel
12:8	R/W	0	tdmin_a dat_in bit1 sel
4:0	R/W	0	tdmin_a dat_in bit0 sel 0: sel TDM_D0; 1: sel TDM_D1; 2: sel TDM_D2; ... 31: sel TDM_D31;

Table 11-320 EE_AUDIO_DAT_PAD_CTRL1 0x391

Bits	R/W	Default	Description
28:24	R/W	0	tdmin_a dat_in bit7 sel
20:16	R/W	0	tdmin_a dat_in bit6 sel
12:8	R/W	0	tdmin_a dat_in bit5 sel
4:0	R/W	0	tdmin_a dat_in bit4 sel

Amlogic Proprietary and Confidential
Copyright © Amlogic. All rights reserved.

Table 11-321 EE_AUDIO_DAT_PAD_CTRL2 0x392

Bits	R/W	Default	Description
28:24	R/W	0	tdmin_b dat_in bit3 sel
20:16	R/W	0	tdmin_b dat_in bit2 sel
12:8	R/W	0	tdmin_b dat_in bit1 sel
4:0	R/W	0	tdmin_b dat_in bit0 sel

Table 11-322 EE_AUDIO_DAT_PAD_CTRL3 0x393

Bits	R/W	Default	Description
28:24	R/W	0	tdmin_b dat_in bit7 sel
20:16	R/W	0	tdmin_b dat_in bit6 sel
12:8	R/W	0	tdmin_b dat_in bit5 sel
4:0	R/W	0	tdmin_b dat_in bit4 sel

Table 11-323 EE_AUDIO_DAT_PAD_CTRL4 0x394

Bits	R/W	Default	Description
28:24	R/W	0	tdmin_c dat_in bit3 sel
20:16	R/W	0	tdmin_c dat_in bit2 sel
12:8	R/W	0	tdmin_c dat_in bit1 sel
4:0	R/W	0	tdmin_c dat_in bit0 sel

Table 11-324 EE_AUDIO_DAT_PAD_CTRL5 0x395

Bits	R/W	Default	Description
28:24	R/W	0	tdmin_c dat_in bit7 sel
20:16	R/W	0	tdmin_c dat_in bit6 sel
12:8	R/W	0	tdmin_c dat_in bit5 sel
4:0	R/W	0	tdmin_c dat_in bit4 sel

Table 11-325 EE_AUDIO_DAT_PAD_CTRL6 0x396

Bits	R/W	Default	Description
28:24	R/W	0	TDM_D3 out src sel:
20:16	R/W	0	TDM_D2 out src sel:

Amlogic Proprietary and Confidential
Copyright © Amlogic. All rights reserved.

Bits	R/W	Default	Description
12:8	R/W	0	TDM_D1 out src sel:
4:0	R/W	0	TDM_D0 out src sel: 0: tdmout_a lane0; 1: tdmout_a lane1; ... 7: tdmout_b lane7; 8: tdmout_b lane0; 9: tdmout_b lane1; ... 15: tdmout_b lane7; 16: tdmout_c lane0; 17: tdmout_c lane1; ... 23: tdmout_c lane7;

Table 11-326 EE_AUDIO_DAT_PAD_CTRL7 0x397

Bits	R/W	Default	Description
28:24	R/W	0	TDM_D7 out src sel:
20:16	R/W	0	TDM_D6 out src sel:
12:8	R/W	0	TDM_D5 out src sel:
4:0	R/W	0	TDM_D4 out src sel:

Table 11-327 EE_AUDIO_DAT_PAD_CTRL8 0x398

Bits	R/W	Default	Description
28:24	R/W	0	TDM_D11 out src sel:
20:16	R/W	0	TDM_D10 out src sel:
12:8	R/W	0	TDM_D9 out src sel:
4:0	R/W	0	TDM_D8 out src sel:

Table 11-328 EE_AUDIO_DAT_PAD_CTRL9 0x399

Bits	R/W	Default	Description
28:24	R/W	0	TDM_D15 out src sel:
20:16	R/W	0	TDM_D14 out src sel:
12:8	R/W	0	TDM_D13 out src sel:
4:0	R/W	0	TDM_D12 out src sel:

Table 11-329 EE_AUDIO_DAT_PAD_CTRLA 0x39a

Bits	R/W	Default	Description
28:24	R/W	0	TDM_D19 out src sel:
20:16	R/W	0	TDM_D18 out src sel:

Amlogic Proprietary and Confidential
Copyright © Amlogic. All rights reserved.

Bits	R/W	Default	Description
12:8	R/W	0	TDM_D17 out src sel:
4:0	R/W	0	TDM_D16 out src sel:

Table 11-330 EE_AUDIO_DAT_PAD_CTRLB 0x39b

Bits	R/W	Default	Description
28:24	R/W	0	TDM_D23 out src sel:
20:16	R/W	0	TDM_D22 out src sel:
12:8	R/W	0	TDM_D21 out src sel:
4:0	R/W	0	TDM_D20 out src sel:

Table 11-331 EE_AUDIO_DAT_PAD_CTRLC 0x39c

Bits	R/W	Default	Description
28:24	R/W	0	TDM_D27 out src sel:
20:16	R/W	0	TDM_D26 out src sel:
12:8	R/W	0	TDM_D25 out src sel:
4:0	R/W	0	TDM_D24 out src sel:

Table 11-332 EE_AUDIO_DAT_PAD_CTRLD 0x39d

Bits	R/W	Default	Description
28:24	R/W	0	TDM_D31 out src sel:
20:16	R/W	0	TDM_D30 out src sel:
12:8	R/W	0	TDM_D29 out src sel:
4:0	R/W	0	TDM_D28 out src sel:

Table 11-333 EE_AUDIO_DAT_PAD_CTRLE 0x39e

Bits	R/W	Default	Description
31	R/W	0	TDM_D31 oen sel: 0: reg_oen_val bit31; 1: from TDMOUT;
30	R/W	0	TDM_D30 oen sel: 0: reg_oen_val bit30; 1: from TDMOUT;
...	...	...	...
0	R/W	0	TDM_D0 oen sel: 0: reg_oen_val bit0; 1: from TDMOUT;

Amlogic Proprietary and Confidential
Copyright © Amlogic. All rights reserved.

Table 11-334 EE_AUDIO_DAT_PAD_CTRLF 0x39f

Bits	R/W	Default	Description
31:0	R/W	0	reg_oen_val; 0: output; 1: input; bit31: TDM_D31 bit30: TDM_D30 ... bit1: TDM_D1 bit0: TDM_D0

Table 11-335 EE_AUDIO_TDMIN_A_CTRL 0xc0

Bits	R/W	Default	Description
31	R/W	0x0000-0000	reg_work_enable 0:disable; 1:enable;
30	R/W		reg_i2s_mode,0:tdm mode; 1: i2s mode;
29	R/W		reg_rst_afifo_out_n, reset afifo out side; need set to 1 before reg_rst_afifo_in_n;
28	R/W		reg_rst_afifo_in_n, reset afifo in side; need set 1 after set reg_rst_afifo_out_n to 1;
26	R/W		reg_tdmin_in_resync; force TDMIN stable signal to low, then TDMIN need resync to stable; the condition of stable to high is : detected rise edge of WS
25	R/W		reg_tdmin_in_rev_ws, revert ws(lrclk); 0 :disable; 1: enable;
24	R/W		reg_tdmin_in_rev_dat, revert data; 0:disable; 1:enable;
23:20	R/W		select tdmin src; 0 tdmin_a dat_in 1 tdmin_b dat_in 2 tdmin_c dat_in 3 0 4 hdmirx 5 acodec_adc 6 0 7 0 8 0 9 0 10 0 11 0 12 tdmout_a dat_out 13 tdmout_b dat_out 14 tdmout_c dat_out 15 0
18:16	R/W		reg_tdmin_in_bit_skew, add delay to ws or data for skew modification;
15:13	R/W		reg_stable_mask, each bit can enable one condition to pull stable signal to low. bit15: if afifo overflow, will pull stable to low; bit14: if the slot_cnt != reg_tdmin_slot_num, will pull stable to low; bit13: if the bit_cnt != reg_tdmin_bit_num, will pull stable to low;
12:8	R/W		reg_tdmin_slot_num for I2S, it's fixed 0x1. for TDM, the max is 31 which mean 32 slots
7:6	R/W		reg_tdmin_chnum_mode; 0:chnum[7:0] = valid_cnt[7:0] 1:chnum[7:0] = cyc_cnt[3:0] 2:chnum[7:0] = slot_cnt[4:1],cyc_cnt[0] 3:chnum[7:0] = slot_cnt[4:1],cyc_cnt[3:0]

Amlogic Proprietary and Confidential
Copyright © Amlogic. All rights reserved.

Bits	R/W	Default	Description
5	R/W		reg_lsb_first, 0: store first bit received to data_store[0]; 1: store first bit received to data_store[31];
4:0	R/W		reg_tdmin_bit_num, bitwidth of each slot, if slot is 16bits, set this register to 15;

Table 11-336 EE_AUDIO_TDMIN_A_SWAP0 0xc1

Bits	R/W	Default	Description
31:28	R/W	0x0000-0000	ch7_sel 0: lane0 left channel; 1: lane0 right channel; 2: lane1 left channel; 3: lane1 right channel; 4: lane2 left channel; 5: lane2 right channel; 6: lane3 left channel; 7: lane3 right channel; 8: lane4 left channel; 9: lane4 right channel; 10: lane5 left channel; 11: lane5 right channel; 12: lane6 left channel; 13: lane6 right channel; 14: lane7 left channel; 15: lane7 right channel;
27:24	R/W		ch6_sel
23:20	R/W		ch5_sel
19:16	R/W		ch4_sel
15:12	R/W		ch3_sel
11:8	R/W		ch2_sel
7:4	R/W		ch1_sel
3:0	R/W		ch0_sel

Table 11-337 EE_AUDIO_TDMIN_A_SWAP1 0x260

Bits	R/W	Default	Description
31:28	R/W	0x0000-0000	ch15_sel
27:24	R/W		ch14_sel
23:20	R/W		ch13_sel
19:16	R/W		ch12_sel
15:12	R/W		ch11_sel
11:8	R/W		ch10_sel
7:4	R/W		ch9_sel
3:0	R/W		ch8_sel

Amlogic Proprietary and Confidential
Copyright © Amlogic. All rights reserved.

Table 11-338 EE_AUDIO_TDMIN_A_MASK0 0xc2

Bits	R/W	Default	Description
31:0	R/W	0x0000-0000	reg_lane0_mask, mask each channel in lane0, max is 32 ch;

Table 11-339 EE_AUDIO_TDMIN_A_MASK1 0xc3

Bits	R/W	Default	Description
31:0	R/W	0x0000-0000	reg_lane1_mask, mask each channel in lane1, max is 32 ch;

Table 11-340 EE_AUDIO_TDMIN_A_MASK2 0xc4

Bits	R/W	Default	Description
31:0	R/W	0x0000-0000	reg_lane2_mask, mask each channel in lane2, max is 32 ch;

Table 11-341 EE_AUDIO_TDMIN_A_MASK3 0xc5

Bits	R/W	Default	Description
31:0	R/W	0x0000-0000	reg_lane3_mask, mask each channel in lane3, max is 32 ch;

Table 11-342 EE_AUDIO_TDMIN_A_MASK4 0x261

Bits	R/W	Default	Description
31:0	R/W	0x0000-0000	reg_lane4_mask, mask each channel in lane4, max is 32 ch;

Table 11-343 EE_AUDIO_TDMIN_A_MASK5 0x262

Bits	R/W	Default	Description
31:0	R/W	0x0000-0000	reg_lane5_mask, mask each channel in lane5, max is 32 ch;

Table 11-344 EE_AUDIO_TDMIN_A_MASK6 0x263

Bits	R/W	Default	Description
31:0	R/W	0x0000-0000	reg_lane6_mask, mask each channel in lane6, max is 32 ch;

Table 11-345 EE_AUDIO_TDMIN_A_MASK7 0x264

Bits	R/W	Default	Description
31:0	R/W	0x0000-0000	reg_lane7_mask, mask each channel in lane7, max is 32 ch;

Amlogic Proprietary and Confidential
Copyright © Amlogic. All rights reserved.

Table 11-346 EE_AUDIO_TDMIN_A_STAT 0xc6

Bits	R/W	Default	Description
31:29	R	0x0000-0000	afifo_cnt[2:0]
28:24	R		r_input_slot_cnt_max, the maxnum of slot_cnt
23:16	R		r_input_slot_cnt_min, the minnum of slot_cnt
14	R		overflow_flag, overflow flag of afifo
13:10	R		max_fifo_cnt, the maxnum of afifo_cnt
9:5	R		r_input_bit_cnt_max, the maxnum of bit_cnt
4:0	R		r_input_bit_cnt_min, the minnum of bit_cnt

Table 11-347 EE_AUDIO_TDMIN_A_MUTE_VAL 0xc7

Bits	R/W	Default	Description
31:0	R/W	0x0000-0000	reg_tmdin_a_mute_val, will replace received data if set mute = 1 , the channel value

Table 11-348 EE_AUDIO_TDMIN_A_MUTE0 0xc8

Bits	R/W	Default	Description
31:0	R/W	0x0000-0000	reg_lane0_mute, mute each channel in lane0, max is 32 ch;

Table 11-349 EE_AUDIO_TDMIN_A_MUTE1 0xc9

Bits	R/W	Default	Description
31:0	R/W	0x0000-0000	reg_lane1_mute, mute each channel in lane1, max is 32 ch;

Table 11-350 EE_AUDIO_TDMIN_A_MUTE2 0xca

Bits	R/W	Default	Description
31:0	R/W	0x0000-0000	reg_lane2_mute, mute each channel in lane2, max is 32 ch;

Table 11-351 EE_AUDIO_TDMIN_A_MUTE3 0xcb

Bits	R/W	Default	Description
31:0	R/W	0x0000-0000	reg_lane3_mute, mute each channel in lane3, max is 32 ch;

Table 11-352 EE_AUDIO_TDMIN_A_MUTE4 0x265

Bits	R/W	Default	Description
31:0	R/W	0x0000-0000	reg_lane4_mute, mute each channel in lane4, max is 32 ch;

Amlogic Proprietary and Confidential
Copyright © Amlogic. All rights reserved.

Table 11-353 EE_AUDIO_TDMIN_A_MUTE5 0x266

Bits	R/W	Default	Description
31:0	R/W	0x0000-0000	reg_lane5_mute, mute each channel in lane5, max is 32 ch;

Table 11-354 EE_AUDIO_TDMIN_A_MUTE6 0x267

Bits	R/W	Default	Description
31:0	R/W	0x0000-0000	reg_lane6_mute, mute each channel in lane6, max is 32 ch;

Table 11-355 EE_AUDIO_TDMIN_A_MUTE7 0x268

Bits	R/W	Default	Description
31:0	R/W	0x0000-0000	reg_lane7_mute, mute each channel in lane7, max is 32 ch;

EE_AUDIO_TDMIN_B_CTRL 0xd0
EE_AUDIO_TDMIN_B_SWAP0 0xd1
EE_AUDIO_TDMIN_B_SWAP1 0x270
EE_AUDIO_TDMIN_B_MASK0 0xd2
EE_AUDIO_TDMIN_B_MASK1 0xd3
EE_AUDIO_TDMIN_B_MASK2 0xd4
EE_AUDIO_TDMIN_B_MASK3 0xd5
EE_AUDIO_TDMIN_B_MASK4 0x271
EE_AUDIO_TDMIN_B_MASK5 0x272
EE_AUDIO_TDMIN_B_MASK6 0x273
EE_AUDIO_TDMIN_B_MASK7 0x274
EE_AUDIO_TDMIN_B_STAT 0xd6
EE_AUDIO_TDMIN_B_MUTE_VAL 0xd7
EE_AUDIO_TDMIN_B_MUTE0 0xd8
EE_AUDIO_TDMIN_B_MUTE1 0xd9
EE_AUDIO_TDMIN_B_MUTE2 0xda
EE_AUDIO_TDMIN_B_MUTE3 0xdb
EE_AUDIO_TDMIN_B_MUTE4 0x275
EE_AUDIO_TDMIN_B_MUTE5 0x276
EE_AUDIO_TDMIN_B_MUTE6 0x277
EE_AUDIO_TDMIN_B_MUTE7 0x278

Amlogic Proprietary and Confidential
Copyright © Amlogic. All rights reserved.

EE_AUDIO_TDMIN_C_CTRL 0xe0
EE_AUDIO_TDMIN_C_SWAP0 0xe1
EE_AUDIO_TDMIN_C_SWAP1 0x280
EE_AUDIO_TDMIN_C_MASK0 0xe2
EE_AUDIO_TDMIN_C_MASK1 0xe3
EE_AUDIO_TDMIN_C_MASK2 0xe4
EE_AUDIO_TDMIN_C_MASK3 0xe5
EE_AUDIO_TDMIN_C_MASK4 0x281
EE_AUDIO_TDMIN_C_MASK5 0x282
EE_AUDIO_TDMIN_C_MASK6 0x283
EE_AUDIO_TDMIN_C_MASK7 0x284
EE_AUDIO_TDMIN_C_STAT 0xe6
EE_AUDIO_TDMIN_C_MUTE_VAL 0xe7
EE_AUDIO_TDMIN_C_MUTE0 0xe8
EE_AUDIO_TDMIN_C_MUTE1 0xe9
EE_AUDIO_TDMIN_C_MUTE2 0xea
EE_AUDIO_TDMIN_C_MUTE3 0xeb
EE_AUDIO_TDMIN_C_MUTE4 0x285
EE_AUDIO_TDMIN_C_MUTE5 0x286
EE_AUDIO_TDMIN_C_MUTE6 0x287
EE_AUDIO_TDMIN_C_MUTE7 0x288

EE_AUDIO_TDMIN_LB_CTRL 0xf0
EE_AUDIO_TDMIN_LB_SWAP0 0xf1
EE_AUDIO_TDMIN_LB_SWAP1 0x290
EE_AUDIO_TDMIN_LB_MASK0 0xf2
EE_AUDIO_TDMIN_LB_MASK1 0xf3
EE_AUDIO_TDMIN_LB_MASK2 0xf4
EE_AUDIO_TDMIN_LB_MASK3 0xf5
EE_AUDIO_TDMIN_LB_MASK4 0x291
EE_AUDIO_TDMIN_LB_MASK5 0x292
EE_AUDIO_TDMIN_LB_MASK6 0x293
EE_AUDIO_TDMIN_LB_MASK7 0x294
EE_AUDIO_TDMIN_LB_STAT 0xf6
EE_AUDIO_TDMIN_LB_MUTE_VAL 0xf7
EE_AUDIO_TDMIN_LB_MUTE0 0xf8
EE_AUDIO_TDMIN_LB_MUTE1 0xf9
EE_AUDIO_TDMIN_LB_MUTE2 0xfa

Amlogic Proprietary and Confidential
Copyright © Amlogic. All rights reserved.

EE_AUDIO_TDMIN_LB_MUTE3 0xfb

EE_AUDIO_TDMIN_LB_MUTE4 0x295

EE_AUDIO_TDMIN_LB_MUTE5 0x296

EE_AUDIO_TDMIN_LB_MUTE6 0x297

EE_AUDIO_TDMIN_LB_MUTE7 0x298

Table 11-356 EE_AUDIO_TDMOUT_A_CTRL0 0x140

Bits	R/W	Default	Description
31	R/W	0x0000-0000	reg_work_enable, 0:disable; 1:enable;
30	R/W		reg_rst_req_frddr, reset ref_frddr in TDMOUT;
29	R/W		reg_rst_afifo_out_n, reset afifo out side;
28	R/W		reg_rst_afifo_in_n, reset afifo in side; need set 1 after set reg_rst_afifo_out_n to 1;
19:15	R/W		reg_tdm_init_bitnum, initial count value of bitcnt
14:10	R/W		reg_tdm_init_slotnum, initial count value of slotcnt
9:5	R/W		reg_tdmout_slot_num , max value of slotcnt; if each frame has 8 slots, set it to 7;
4:0	R/W		reg_tdmout_bit_num ,max value of bitcnt; if each slot has 16bits, set it to 15;

Table 11-357 EE_AUDIO_TDMOUT_A_CTRL1 0x141

Bits	R/W	Default	Description
31	R/W	0x0000-0000	eq_drc_sel; 1: select eq_drc output;
30	R/W		reg_debug_en,0:disable debug feature; 1: enable;
29	R/W		reg_out_lsb_first, 0: msb first; 1: lsb first;
28	R/W		reg_rev_ws_in, revert ws; 0: disable; 1: enable;
27	R/W		reg_rev_dat, revert data; 0: disable; 1: enable;
26:24	R/W		reg_frddr_sel, 0:frddr_A;1:frddr_B;2:frddr_C; 3:frddr_D;4:frddr_E
23:16	R/W		reg_wait_cnt, wait some time when enable set to 1;then start request data from frddr;
15:14	R/W		reg_gain_shift; 0: data * 1; 1: data * 2; 2: data * 4; 3: data * 8;
12:8	R/W		reg_frddr_msb, msb position of data
6:4	R/W		reg_frddr_type, 0: split 64bits ddr data to 8 sample, each sample need 8 bits; if bitwidth < 8, left-justified; 1: split 64bits ddr data to 4 sample, each sample need 16 bits; if bitwidth < 16, left-justified ; 2: split 64bits ddr data to 4 sample, each sample need 16 bits; if bitwidth < 16, right-justified ; 3: split 64bits ddr data to 2 sample, each sample need 32 bits; if bitwidth < 32, left-justified; 4: split 64bits ddr data to 2 sample, each sample need 32 bits; if bitwidth < 32, right-justified;

Amlogic Proprietary and Confidential
Copyright © Amlogic. All rights reserved.

Bits	R/W	Default	Description
3	R/W		reg_keep_req_ddr_init; set 0 will stop sending data if req_ddr stopped by init_done signal pull down.(refer to reg_clr_by_init)
2	R/W		reg_sts_sel;

For position of sample in DDR:

	ddr_data [7:0] (byte)							
type	byte7	byte6	byte5	byte4	byte3	byte2	byte1	byte0
0	s7	s6	s5	s4	s3	s2	s1	s0
	s15	s14	s13	s12	s11	s10	s9	s8
1/2	s3		s2		s1		s0	
	s7		s6		s5		s4	
3/4	s1				s0			
	s3				s2			

For encoder, it will start output[31] first, then output[30], finished at output[32-bit_num];

If lsb_first, will start s[0], then s[1], finished at s[bit_num+1];

	output [31:0] (bit)																														
type	31	30	29	28	27	26	25	24	23	22	21	20	19	18	17	16	15	14	13	12	11	10	9	8	7	6	5	4	3	2	1	0
0	s[7]	s[6]	s[5]	s[4]	s[3]	s[2]	s[1]	s[0]	0																							
1	s[15]	s[14]	s[13]	s[12]	s[11]	s[10]	s[9]	s[8]	s[7]	s[6]	s[5]	s[4]	s[3]	s[2]	s[1]	s[0]	0															
2	s[msb]	s[msb-1]	--			s[1]	s[0]	0																								
3	s[31]	s[30]	s[29]	s[28]	s[27]	s[26]	s[25]	s[24]	s[23]	s[22]	s[21]	s[20]	s[19]	s[18]	s[17]	s[16]	s[15]	s[14]	s[13]	s[12]	s[11]	s[10]	s[9]	s[8]	s[7]	s[6]	s[5]	s[4]	s[3]	s[2]	s[1]	s[0]
4	s[msb]	s[msb-1]	--																			s[1]	s[0]	0								

Table 11-358 EE_AUDIO_TDMOUT_A_CTRL2 0x2a0

Bits	R/W	Default	Description
31:24	R/W	0x0000-0000	reg_clr_by_init; when FRDDR is disable, its init_done will pull down, then need clear the status of REQ_FRDDR. 31: clear init_finish; 30:clear data_buff; 29:clear gain related; 28:clear DDR_REQ; 27:clear ack_masked(mean received first init_done); 26:clear afifo in; 25:clear afifo out ; 24:clear bit_cnt/slot_cnt/fit_num/wait_cnt;
7:0	R/W		reg_tdm_lr_mix, [7]: mix l7 and r7; [6]: mix l6 and r6; [5]: mix l5 and r5; [4]: mix l4 and r4; [3]: mix l3 and r3; [2]: mix l2 and r2; [1]: mix l1 and r1; [0]: mix l0 and r0;

Amlogic Proprietary and Confidential
Copyright © Amlogic. All rights reserved.

Table 11-359 EE_AUDIO_TDMOUT_A_SWAP0 0x142

Bits	R/W	Default	Description
31:28	R/W	0x0000-0000	ch7_sel 0: lane0 left channel; 1: lane0 right channel; 2: lane1 left channel; 3: lane1 right channel; 4: lane2 left channel; 5: lane2 right channel; 6: lane3 left channel; 7: lane3 right channel; 8: lane4 left channel; 9: lane4 right channel; 10: lane5 left channel; 11: lane5 right channel; 12: lane6 left channel; 13: lane6 right channel; 14: lane7 left channel; 15: lane7 right channel;
27:24	R/W		ch6_sel
23:20	R/W		ch5_sel
19:16	R/W		ch4_sel
15:12	R/W		ch3_sel
11:8	R/W		ch2_sel
7:4	R/W		ch1_sel
3:0	R/W		ch0_sel

Table 11-360 EE_AUDIO_TDMOUT_A_SWAP1 0x2a1

Bits	R/W	Default	Description
31:28	R/W	0x0000-0000	ch15_sel
27:24	R/W		ch14_sel
23:20	R/W		ch13_sel
19:16	R/W		ch12_sel
15:12	R/W		ch11_sel
11:8	R/W		ch10_sel
7:4	R/W		ch9_sel
3:0	R/W		ch8_sel

Table 11-361 EE_AUDIO_TDMOUT_A_MASK0 0x143

Bits	R/W	Default	Description
31:0	R/W	0x0000-0000	reg_lane0_mask, mask each channel in lane0, max is 32 ch;

Amlogic Proprietary and Confidential
Copyright © Amlogic. All rights reserved.

Table 11-362 EE_AUDIO_TDMOUT_A_MASK1 0x144

Bits	R/W	Default	Description
31:0	R/W	0x0000-0000	reg_lane1_mask, mask each channel in lane1, max is 32 ch;

Table 11-363 EE_AUDIO_TDMOUT_A_MASK2 0x145

Bits	R/W	Default	Description
31:0	R/W	0x0000-0000	reg_lane2_mask, mask each channel in lane2, max is 32 ch;

Table 11-364 EE_AUDIO_TDMOUT_A_MASK3 0x146

Bits	R/W	Default	Description
31:0	R/W	0x0000-0000	reg_lane3_mask, mask each channel in lane3, max is 32 ch;

Table 11-365 EE_AUDIO_TDMOUT_A_MASK4 0x2a4

Bits	R/W	Default	Description
31:0	R/W	0x0000-0000	reg_lane4_mask, mask each channel in lane4, max is 32 ch;

Table 11-366 EE_AUDIO_TDMOUT_A_MASK5 0x2a5

Bits	R/W	Default	Description
31:0	R/W	0x0000-0000	reg_lane5_mask, mask each channel in lane5, max is 32 ch;

Table 11-367 EE_AUDIO_TDMOUT_A_MASK6 0x2a6

Bits	R/W	Default	Description
31:0	R/W	0x0000-0000	reg_lane6_mask, mask each channel in lane6, max is 32 ch;

Table 11-368 EE_AUDIO_TDMOUT_A_MASK7 0x2a7

Bits	R/W	Default	Description
31:0	R/W	0x0000-0000	reg_lane7_mask, mask each channel in lane7, max is 32 ch;

Table 11-369 EE_AUDIO_TDMOUT_A_MASK_VAL 0x14f

Bits	R/W	Default	Description
31:0	R/W	0x0000-0000	reg_tdmout_mask_val, when masked, the channel value

Amlogic Proprietary and Confidential
Copyright © Amlogic. All rights reserved.

Table 11-370 EE_AUDIO_TDMOUT_A_STAT 0x147

Bits	R/W	Default	Description

31:0	R	0x0000-0000	if reg_sts_sel = 1, it's reg_cur_gain_val;
			if reg_sts_sel = 0, it's another sts as blow:
			bit31:29 : fifo_cnt, afifo cnt
			bit28 : up_error, change to 1 if overflow
			bit27:24 : req_frdd_fsm_stat
			bit21 : r_slot_cnt_err
			bit20 : r_bit_cnt_err
			bit16:12 : r_max_slot_cnt
			bit8:4 : r_max_bit_cnt
			bit3 : r_out_en
			bit2 : r_out_en_pre
			bit1 : r_first_fs
			bit0 : c_frdd_init_finish

Table 11-371 EE_AUDIO_TDMOUT_A_GAIN0 0x148

Bits	R/W	Default	Description
31:24	R/W	0xFF	gain_ch3
23:16	R/W	0xFF	gain_ch2
15:8	R/W	0xFF	gain_ch1
7:0	R/W	0xFF	gain_ch0

Table 11-372 EE_AUDIO_TDMOUT_A_GAIN1 0x149

Bits	R/W	Default	Description
31:24	R/W	0xFF	gain_ch7
23:16	R/W	0xFF	gain_ch6
15:8	R/W	0xFF	gain_ch5
7:0	R/W	0xFF	gain_ch4

Table 11-373 EE_AUDIO_TDMOUT_A_GAIN2 0x2a2

Bits	R/W	Default	Description
31:24	R/W	0xFF	gain_ch11
23:16	R/W	0xFF	gain_ch10
15:8	R/W	0xFF	gain_ch9
7:0	R/W	0xFF	gain_ch8

Table 11-374 EE_AUDIO_TDMOUT_A_GAIN3 0x2a3

Bits	R/W	Default	Description
31:24	R/W	0xFF	gain_ch15
23:16	R/W	0xFF	gain_ch14

Amlogic Proprietary and Confidential
Copyright © Amlogic. All rights reserved.

Bits	R/W	Default	Description
15:8	R/W	0xFF	gain_ch13
7:0	R/W	0xFF	gain_ch12

Table 11-375 EE_AUDIO_TDMOUT_A_MUTE_VAL 0x14a

Bits	R/W	Default	Description
31:0	R/W	0x0000-0000	reg_tmdin_a_mute_val, when mute , the channel value

Table 11-376 EE_AUDIO_TDMOUT_A_MUTE0 0x14b

Bits	R/W	Default	Description
31:0	R/W	0x0000-0000	reg_lane0_mute, mute each channel in lane0, max is 32 ch;

Table 11-377 EE_AUDIO_TDMOUT_A_MUTE1 0x14c

Bits	R/W	Default	Description
31:0	R/W	0x0000-0000	reg_lane1_mute, mute each channel in lane1, max is 32 ch;

Table 11-378 EE_AUDIO_TDMOUT_A_MUTE2 0x14d

Bits	R/W	Default	Description
31:0	R/W	0x0000-0000	reg_lane2_mute, mute each channel in lane2 max is 32 ch;

Table 11-379 EE_AUDIO_TDMOUT_A_MUTE3 0x14e

Bits	R/W	Default	Description
31:0	R/W	0x0000-0000	reg_lane3_mute, mute each channel in lane3, max is 32 ch;

Table 11-380 EE_AUDIO_TDMOUT_A_MUTE4 0x2a8

Bits	R/W	Default	Description
31:0	R/W	0x0000-0000	reg_lane4_mute, mute each channel in lane4, max is 32 ch;

Table 11-381 EE_AUDIO_TDMOUT_A_MUTE5 0x2a9

Bits	R/W	Default	Description
31:0	R/W	0x0000-0000	reg_lane5_mute, mute each channel in lane5, max is 32 ch;

Amlogic Proprietary and Confidential
Copyright © Amlogic. All rights reserved.

Table 11-382 EE_AUDIO_TDMOUT_A_MUTE6 0x2aa

Bits	R/W	Default	Description
31:0	R/W	0x0000-0000	reg_lane6_mute, mute each channel in lane6 max is 32 ch;

Table 11-383 EE_AUDIO_TDMOUT_A_MUTE7 0x2ab

Bits	R/W	Default	Description
31:0	R/W	0x0000-0000	reg_lane7_mute, mute each channel in lane7, max is 32 ch;

Table 11-384 EE_AUDIO_TDMOUT_A_GAIN_EN 0x2ac

Bits	R/W	Default	Description
31:16	R/W	0x0000-0000	
15	R/W	0x0000-0000	ch15 gain_en; 1: out = in * gain_ch15; 0: out = in;
14	R/W	0x0000-0000	ch14 gain_en; 1: out = in * gain_ch14; 0: out = in;
13	R/W	0x0000-0000	ch13 gain_en; 1: out = in * gain_ch13; 0: out = in;
12	R/W	0x0000-0000	ch12 gain_en; 1: out = in * gain_ch12; 0: out = in;
11	R/W	0x0000-0000	ch11 gain_en; 1: out = in * gain_ch11; 0: out = in;
10	R/W	0x0000-0000	ch10 gain_en; 1: out = in * gain_ch10; 0: out = in;
9	R/W	0x0000-0000	ch9 gain_en; 1: out = in * gain_ch9; 0: out = in;
8	R/W	0x0000-0000	ch8 gain_en; 1: out = in * gain_ch8; 0: out = in;
7	R/W	0x0000-0000	ch7 gain_en; 1: out = in * gain_ch7; 0: out = in;
6	R/W	0x0000-0000	ch6 gain_en; 1: out = in * gain_ch6; 0: out = in;
5	R/W	0x0000-0000	ch5 gain_en; 1: out = in * gain_ch5; 0: out = in;
4	R/W	0x0000-0000	ch4 gain_en; 1: out = in * gain_ch4; 0: out = in;
3	R/W	0x0000-0000	ch3 gain_en; 1: out = in * gain_ch3; 0: out = in;
2	R/W	0x0000-0000	ch2 gain_en; 1: out = in * gain_ch2; 0: out = in;
1	R/W	0x0000-0000	ch1 gain_en; 1: out = in * gain_ch1; 0: out = in;
0	R/W	0x0000-0000	ch0 gain_en; 1: out = in * gain_ch0; 0: out = in;

Amlogic Proprietary and Confidential
Copyright © Amlogic. All rights reserved.

Table 11-385 EE_AUDIO_TDMOUT_A_GAIN_CTRL 0x2ad

Bits	R/W	Default	Description
31	R/W	0x0000-0000	reg_gain_step_chg; 0: the current_gain will follow direct to reg_gain change; 1: the current_gain will follow step by step to reg_gain change; etc: change reg_gain from 40 to 50, and gain_step = 3; the currenct_gain will change as: 40-> 43-> 46-> 49-> 50;
25:24	R/W		reg_cur_gain_sel; 0: cur_gain_sts = ch3,ch2,ch1,ch0; 1: cur_gain_sts = ch7,ch6,ch5,ch4; 2: cur_gain_sts = ch11,ch10,ch9,ch8; 3: cur_gain_sts = ch15,ch14,ch13,ch12;
23:16	R/W		reg_gain_step; modified gain value each time;
15:0	R/W		reg_gain_updt_timer; the period of each change, unit is FS;

11.11.8 SPDIF Registers

Table 11-386 EE_AUDIO_SPDIFIN_CTRL0 0x100

Bits	R/W	Default	Description
31	R/W	0x0000-0000	reg_work_enable, 0: disable; 1:enable;
30	R/W		reg_chnum_sel, 0: ch_num = 0~383(include frame cnt); 1: ch_num = 0~1(only L/R);
29	R/W		reg_rst_afifo_out_n, reset afifo out side;
28	R/W		reg_rst_afifo_in_n, reset afifo in side; need set 1 after set reg_rst_afifo_out_n to 1;
27	R/W		reg_debug_en, 0:disable debug; 1: enable;
26	R/W		reg_exception_sts_clr;
25	R/W		reg_findpapb_en, 0: disable NonPCM mode; 1: enable;
24	R/W		reg_width_sel, 0: detect sample mode by max_width;1: detect sample mode by min_width;
23:12	R/W		reg_nonpcm2pcm_th, when detected NonPcm mode;if long time (z_cnt > = th) didn't detect PaPb again, will generate interrupt to SW: now changed to PCM mode;
11:8	R/W		reg_ch_status_sel, For EE_AUDIO_SPDIFIN_STAT1
7	R/W		reg_mute_l, 0: disable ; 1: mute channel L;
6	R/W		reg_mute_r, 0: disable ; 1: mute channel R;
5:4	R/W		reg_spdifin_src_sel, 0: PAD of spdifin;1: spdifout;
3	R/W		reg_check_valid, 0: disable valid check ; 1: enable;
2	R/W		reg_check_parity, 0: disable parity check ; 1: enable;

Amlogic Proprietary and Confidential
Copyright © Amlogic. All rights reserved.

Bits	R/W	Default	Description
1	R/W		reg_invert_data, 0: disable; 1: invert [27:4] to [4:27];
0	R/W		reg_spdifin_phase, 0: disable invert; 1: enable;

Table 11-387 EE_AUDIO_SPDIFIN_CTRL1 0x101

Bits	R/W	Default	Description
31	R/W	0x0000-0000	reg_force_sample_mode, 0: auto detect sample mode; 1: force a fixed sample mode;
30:28	R/W		reg_sample_mode
27:20	R/W		reg_interrupt_mask, mask each interrupt;
19:0	R/W		reg_base_timer, define a base timer to detect sample mode changed; need *256;

Table 11-388 EE_AUDIO_SPDIFIN_CTRL2 0x102

Bits	R/W	Default	Description
29:20	R/W	0x0000-0000	reg_sample_mode0_timer_th
19:10	R/W		reg_sample_mode1_timer_th
9:0	R/W		reg_sample_mode2_timer_th

Table 11-389 EE_AUDIO_SPDIFIN_CTRL3 0x103

Bits	R/W	Default	Description
29:20	R/W	0x0000-0000	reg_sample_mode3_timer_th
19:10	R/W		reg_sample_mode4_timer_th
9:0	R/W		reg_sample_mode5_timer_th

Table 11-390 EE_AUDIO_SPDIFIN_CTRL4 0x104

Bits	R/W	Default	Description
31:24	R/W	0x0000-0000	reg_sample_mode0_timer
23:16	R/W		reg_sample_mode1_timer
15:8	R/W		reg_sample_mode2_timer
7:0	R/W		reg_sample_mode3_timer

Amlogic Proprietary and Confidential
Copyright © Amlogic. All rights reserved.

Table 11-391 EE_AUDIO_SPDIFIN_CTRL5 0x105

Bits	R/W	Default	Description
31:24	R/W	0x0000-0000	reg_sample_mode4_timer
23:16	R/W		reg_sample_mode5_timer
15:8	R/W		reg_sample_mode6_timer

Table 11-392 EE_AUDIO_SPDIFIN_CTRL6 0x106

Bits	R/W	Default	Description
31:24	R/W	0x0000-0000	Reg_clr_internal_sts[7:0]; 7: clear valid bit status; 6: clear parity bit status; 5: clear ch status; 4: clear z_cnt status; 3: clear find_nonpcm status; 2: clear pd_data status; 1: clear pc_data status; 0: clear find_papb status;
23:16	R/W		Reg_clr_interrupt[7:0] for each bit of irq_status[7:0];
14	R/W		enable send out find_z
13	R/W		irq_mode; 0: pulse; 1: level;
12	R/W		update_sample_mode_filter_en 0: by 1 width; 1: by average of 4 width;
8	R/W		reg_papb_ext_sync, 1: add ext "0" sync check for papb; 0: disable;
7:0	R/W		reg_papb_ext_mask, mask 8 channel "0" sync

Table 11-393 EE_AUDIO_SPDIFIN_STAT0 0x107

Bits	R/W	Default	Description
31	R/W	0x0000-0000	Valid bit
30:28	R/W		r_sample_mode, current sample mode;
27:18	R/W		r_width_min, the min width of two edge;
17:8	R/W		r_width_max, the max width of two edge;
7:0	R/W		r_interrupt_status, interrupt status, need clear by reg_clk_interrupt; [7]: find PaPb; [6]: valid changed; [5]: find nonpcm to pcm (reg_nonpcm2pcm_th) ; [4]: find Pc or Pd changed; [3]: find CH status changed; [2]: find sample mode changed; [1]: find parity error; [0]: find overflow;

Amlogic Proprietary and Confidential
Copyright © Amlogic. All rights reserved.

Table 11-394 EE_AUDIO_SPDIFIN_STAT1 0x108

Bits	R/W	Default	Description
31:0	R/W	0x0000-0000	channel status, by reg_ch_status_sel; reg_ch_status_sel[3]: 0: channel A; 1: channel B; reg_ch_status_sel[2:0]: 0: ch_status[31:0]; 1: ch_status[63:32]; 2: ch_status[95:64]; 3: ch_status[127:96]; 4: ch_status[159:128]; 5: ch_status[191:160]; 6: pc[15:0],pd[15:0];

Table 11-395 EE_AUDIO_SPDIFIN_STAT2 0x109

Bits	R/W	Default	Description
31:0	R/W	0x0000-0000	debug status, by reg_ch_status_sel; 0: r_z_width, the width of two preamble Z; 1: {16'd0, frame_cnt_min[7:0], frame_cnt_max[7:0]}; 2: {6'd0,width_min[9:0],2'd0,afifo_cnt[3:0], width_max[9:0]};

Table 11-396 EE_AUDIO_SPDIFIN_MUTE_VAL 0x10a

Bits	R/W	Default	Description
31:0	R/W	0x0000-0000	reg_spdifin_mute_val, when muted, the channel value

Table 11-397 EE_AUDIO_SPDIFIN_CTRL7 0x10b

Bits	R/W	Default	Description
31	R/W	0x0000-0000	hold_tri_sample 0: stop capture if received triple 0 or 1;
30	R/W		add_ch_r; when unstable, spdifin will stop send data; set this register to 1 will check current status, if missed ch_r, will add one more ch_r which value is 0;
27:20	R/W		stable_mask; condition of pull stable low; 27: xz_err; 26: afifo overflow; 25: cyc_err2; sample width < reg_stable_cyc_min 24: cyc_err1; sample width > reg_stable_cyc_max; 23: parity_err; 22: bit_cnt_err2; > 64 21: bit_cnt_err1; != 64 20: xyz_err
19:16	R/W		stable_zcnt; the condition to pull stable high
15:8	R/W		stable_cyc_min
7:0	R/W		stable_cyc_max

Amlogic Proprietary and Confidential
Copyright © Amlogic. All rights reserved.

Table 11-398 EE_AUDIO_SPDIFOUT_STAT 0x120

Bits	R/W	Default	Description
31:0	R	0x0000-0000	reg_sts_sel = 0: bit7:5: fifo_cnt, afifo cnt; bit4: up_error, change to 1 if overflow bit3:0: req_frdd_fsm_stat reg_sts_sel = 1: cur_gain_val from REQ_FRDDR;

Table 11-399 EE_AUDIO_SPDIFOUT_GAIN0 0x121

Bits	R/W	Default	Description
31:24	R/W	0xFF	gain_ch3
23:16	R/W	0xFF	gain_ch2
15:8	R/W	0xFF	gain_ch1
7:0	R/W	0xFF	gain_ch0

Table 11-400 EE_AUDIO_SPDIFOUT_GAIN1 0x122

Bits	R/W	Default	Description
31:24	R/W	0xFF	gain_ch7
23:16	R/W	0xFF	gain_ch6
15:8	R/W	0xFF	gain_ch5
7:0	R/W	0xFF	gain_ch4

Table 11-401 EE_AUDIO_SPDIFOUT_CTRL0 0x123

Bits	R/W	Default	Description
31	R/W	0x0000-0000	reg_work_enable, 0: disable ; 1: enable;
30	R/W		reg_req_frddr_rst; 1: reset REQ_FRDDR in SPDIFOUT;
29	R/W		reg_rst_afifo_out_n, reset afifo out side;
28	R/W		reg_rst_afifo_in_n, reset afifo in side; need set 1 after set reg_rst_afifo_out_n to 1;
27	R/W		reg_hold_start_en; 1: add delay to match TDM out when share buff;
26	R/W		reg_userdata_sel, 0: "user data" = reg_userdata_set; 1: "user data " = data [29];
25	R/W		reg_userdata_set
24	R/W		reg_chdata_sel, 0: "ch status" = reg_chsts0~B ;1: "ch status" = data [30];
23	R/W		reg_mix_lr, 0: disable; 1: L = (L+R)/2; R = (L+R)/2;
22	R/W		reg_mute_l, 0: disable; 1: ch_l_data = reg_mute_val;
21	R/W		reg_mute_r, 0: disable; 1: ch_r_data = reg_mute_val;
20	R/W		reg_data_sel, 0: insert data from 31bits;1: insert data from 27bits;
19	R/W		reg_out_msb_first, 0: lsb first; 1: msb first;

Amlogic Proprietary and Confidential
Copyright © Amlogic. All rights reserved.

Bits	R/W	Default	Description
18	R/W		reg_valid_sel, 0: "valid flag" = reg_valid_set; 1: "valid flag" = data [28];
16	R/W		reg_parity_mask; initial parity value
15:0	R/W		reg_mask, [15:14]: mask lane7 L/R; [13:12]: mask lane6 L/R; [11:10]: mask lane5 L/R; [9:8]: mask lane4 L/R; [7:6]: mask lane3 L/R; [5:4]: mask lane2 L/R; [3:2]: mask lane1 L/R; [1:0]: mask lane0 L/R;

Table 11-402 EE_AUDIO_SPDIFOUT_CTRL1 0x124

Bits	R/W	Default	Description
21	R/W	0x0000-0000	eq_drc_sel; 1: select eq_drc data;
26:24	R/W		reg_frddr_sel, 0:frddr_A; 1:frddr_B; 2:frddr_C; 3:frddr_D; 4:frddr_E;
23:16	R/W		reg_wait_cnt, wait some time when enable set to 1; then start request data from frddr;
15:14	R/W		reg_gain_shift; 0: data * 1; 1: data * 2; 2: data * 4; 3: data * 8;
12:8	R/W		reg_frddr_msb, msb position of data
7	R/W		Reg_force_start; 1: needn’t ack from FRDDR; for only transmit “ch status” usage.
6:4	R/W		reg_frddr_type, 0: split 64bits ddr data to 8 sample, each sample need 8 bits; if bitwidth < 8, left-justified; 1: split 64bits ddr data to 4 sample, each sample need 16 bits; if bitwidth < 16, left-justified ; 2: split 64bits ddr data to 4 sample, each sample need 16 bits; if bitwidth < 16, right-justified ; 3: split 64bits ddr data to 2 sample, each sample need 32 bits; if bitwidth < 32, left-justified; 4: split 64bits ddr data to 2 sample, each sample need 32 bits; if bitwidth < 32, right-justified;
3	R/W		reg_keep_req_ddr_init; set 0 will stop sending data if req_ddr stopped by init_done signal pull down.(refer to reg_clr_by_init)
2	R/W		reg_sts_sel;

Amlogic Proprietary and Confidential
Copyright © Amlogic. All rights reserved.

Table 11-403 EE_AUDIO_SPDIFOUT_PREAMB 0x125

Bits	R/W	Default	Description
31	R/W	0x0000-0000	set preamble Z, 0: preamble Z = 8'b11101000; 1: reg[7:0];
20	R/W		set preamble Y, 0: preamble Z = 8'b11100100; 1: reg[15:8];
29	R/W		set preamble X, 0: preamble Z = 8'b11100010; 1: reg[23:16];
23:16	R/W		preamble X
15:8	R/W		preamble Y
7:0	R/W		preamble Z

Table 11-404 EE_AUDIO_SPDIFOUT_SWAP 0x126

Bits	R/W	Default	Description
31:16	R/W	0x0000-0000	hold start cnt, work when CTRL0[27] = 1;
15:8	R/W		reg_clr_by_init; when FRDDR is disable, its init_done will pull down, then need clear the status of REQ_FRDDR. 15: clear init_finish; 14:clear data_buff; 13:clear gain related; 12:clear DDR_REQ; 11:clear ack_masked(mean received first init_done); 10:clear afifo in; 9:clear afifo out ; 8:clear bit_cnt/slot_cnt/fit_num/wait_cnt;
7:4	R/W		lane0 right ch sel,
3:0	R/W		lane0 left ch sel,

Table 11-405 EE_AUDIO_SPDIFOUT_CHSTS0 0x127

Bits	R/W	Default	Description
31:0	R/W	0x0000-0000	channel A status[31:0]

Table 11-406 EE_AUDIO_SPDIFOUT_CHSTS1 0x128

Bits	R/W	Default	Description
31:0	R/W	0x0000-0000	channel A status[63:32]

Table 11-407 EE_AUDIO_SPDIFOUT_CHSTS2 0x129

Bits	R/W	Default	Description
31:0	R/W	0x0000-0000	channel A status[95:64]

Amlogic Proprietary and Confidential
Copyright © Amlogic. All rights reserved.

Table 11-408 EE_AUDIO_SPDIFOUT_CHSTS3 0x12a

Bits	R/W	Default	Description
31:0	R/W	0x0000-0000	channel A status[127:96]

Table 11-409 EE_AUDIO_SPDIFOUT_CHSTS4 0x12b

Bits	R/W	Default	Description
31:0	R/W	0x0000-0000	channel A status[159:128]

Table 11-410 EE_AUDIO_SPDIFOUT_CHSTS5 0x12cv

Bits	R/W	Default	Description
31:0	R/W	0x0000-0000	channel A status[191:160]

Table 11-411 EE_AUDIO_SPDIFOUT_CHSTS6 0x12d

Bits	R/W	Default	Description
31:0	R/W	0x0000-0000	channel B status[31:0]

Table 11-412 EE_AUDIO_SPDIFOUT_CHSTS7 0x12e

Bits	R/W	Default	Description
31:0	R/W	0x0000-0000	channel B status[63:32]

Table 11-413 EE_AUDIO_SPDIFOUT_CHSTS8 0x12f

Bits	R/W	Default	Description
31:0	R/W	0x0000-0000	channel B status[95:64]

Table 11-414 EE_AUDIO_SPDIFOUT_CHSTS9 0x130

Bits	R/W	Default	Description
31:0	R/W	0x0000-0000	channel B status[127:96]

Table 11-415 EE_AUDIO_SPDIFOUT_CHSTSA 0x131

Bits	R/W	Default	Description
31:0	R/W	0x0000-0000	channel B status[159:128]

Amlogic Proprietary and Confidential
Copyright © Amlogic. All rights reserved.

Table 11-416 EE_AUDIO_SPDIFOUT_CHSTSB 0x132

Bits	R/W	Default	Description
31:0	R/W	0x0000-0000	channel B status[191:160]

EE_AUDIO_SPDIFOUT_MUTE_VAL 0x133

Table 11-417 EE_AUDIO_SPDIFOUT_GAIN2 0x134

Bits	R/W	Default	Description
31:24	R/W	0xFF	gain_ch11
23:16	R/W	0xFF	gain_ch10
15:8	R/W	0xFF	gain_ch9
7:0	R/W	0xFF	gain_ch8

Table 11-418 EE_AUDIO_SPDIFOUT_GAIN3 0x135

Bits	R/W	Default	Description
31:24	R/W	0xFF	gain_ch15
23:16	R/W	0xFF	gain_ch14
15:8	R/W	0xFF	gain_ch13
7:0	R/W	0xFF	gain_ch12

Table 11-419 EE_AUDIO_SPDIFOUT_GAIN_EN 0x136

Bits	R/W	Default	Description
31:16	R/W	0x0000-0000	
15	R/W	0x0000-0000	ch15 gain_en; 1: out = in * gain_ch15; 0: out = in;
14	R/W	0x0000-0000	ch14 gain_en; 1: out = in * gain_ch14; 0: out = in;
13	R/W	0x0000-0000	ch13 gain_en; 1: out = in * gain_ch13; 0: out = in;
12	R/W	0x0000-0000	ch12 gain_en; 1: out = in * gain_ch12; 0: out = in;
11	R/W	0x0000-0000	ch11 gain_en; 1: out = in * gain_ch11; 0: out = in;
10	R/W	0x0000-0000	ch10 gain_en; 1: out = in * gain_ch10; 0: out = in;
9	R/W	0x0000-0000	ch9 gain_en; 1: out = in * gain_ch9; 0: out = in;
8	R/W	0x0000-0000	ch8 gain_en; 1: out = in * gain_ch8; 0: out = in;
7	R/W	0x0000-0000	ch7 gain_en; 1: out = in * gain_ch7; 0: out = in;

Amlogic Proprietary and Confidential
Copyright © Amlogic. All rights reserved.

Bits	R/W	Default	Description
6	R/W	0x0000-0000	ch6 gain_en; 1: out = in * gain_ch6; 0: out = in;
5	R/W	0x0000-0000	ch5 gain_en; 1: out = in * gain_ch5; 0: out = in;
4	R/W	0x0000-0000	ch4 gain_en; 1: out = in * gain_ch4; 0: out = in;
3	R/W	0x0000-0000	ch3 gain_en; 1: out = in * gain_ch3; 0: out = in;
2	R/W	0x0000-0000	ch2 gain_en; 1: out = in * gain_ch2; 0: out = in;
1	R/W	0x0000-0000	ch1 gain_en; 1: out = in * gain_ch1; 0: out = in;
0	R/W	0x0000-0000	ch0 gain_en; 1: out = in * gain_ch0; 0: out = in;

Table 11-420 EE_AUDIO_SPDIFOUT_GAIN_CTRL 0x137

Bits	R/W	Default	Description
31	R/W	0x0000-0000	reg_gain_step_chg; 0: the current_gain will follow direct to reg_gain change; 1: the current_gain will follow step by step to reg_gain change; etc: change reg_gain from 40 to 50, and gain_step = 3; the currenct_gain will change as: 40-> 43-> 46-> 49-> 50;
25:24	R/W		reg_cur_gain_sel; 0: cur_gain_sts = ch3,ch2,ch1,ch0; 1: cur_gain_sts = ch7,ch6,ch5,ch4; 2: cur_gain_sts = ch11,ch10,ch9,ch8; 3: cur_gain_sts = ch15,ch14,ch13,ch12;
23:16	R/W		reg_gain_step; modified gain value each time;
15:0	R/W		reg_gain_updt_timer; the period of each change, unit is FS;

EE_AUDIO_SPDIFOUT_B_STAT 0x1a0

EE_AUDIO_SPDIFOUT_B _GAIN0 0x1a1

EE_AUDIO_SPDIFOUT_B _GAIN1 0x1a2

EE_AUDIO_SPDIFOUT_B _CTRL0 0x1a3

EE_AUDIO_SPDIFOUT_B _CTRL1 0x1a4

EE_AUDIO_SPDIFOUT_B _PREAMB 0x1a5

EE_AUDIO_SPDIFOUT_B _SWAP 0x1a6

EE_AUDIO_SPDIFOUT_B _CHSTS0 0x1a7

EE_AUDIO_SPDIFOUT_B _CHSTS1 0x1a8

EE_AUDIO_SPDIFOUT_B _CHSTS2 0x1a9

EE_AUDIO_SPDIFOUT_B _CHSTS3 0x1aa

EE_AUDIO_SPDIFOUT_B _CHSTS4 0x1ab

Amlogic Proprietary and Confidential
Copyright © Amlogic. All rights reserved.

EE_AUDIO_SPDIFOUT_B _CHSTS5 0x1ac
EE_AUDIO_SPDIFOUT_B _CHSTS6 0x1ad
EE_AUDIO_SPDIFOUT_B _CHSTS7 0x1ae
EE_AUDIO_SPDIFOUT_B _CHSTS8 0x1af
EE_AUDIO_SPDIFOUT_B _CHSTS9 0x1b0
EE_AUDIO_SPDIFOUT_B _CHSTSA 0x1b1
EE_AUDIO_SPDIFOUT_B _CHSTSB 0x1b2
EE_AUDIO_SPDIFOUT_B _MUTE_VAL 0x1b3
EE_AUDIO_SPDIFOUT_GAIN2 0x1b4
EE_AUDIO_SPDIFOUT_GAIN3 0x1b5
EE_AUDIO_SPDIFOUT_GAIN_EN 0x1b6
EE_AUDIO_SPDIFOUT_GAIN_CTRL 0x1b7

Table 11-421 EE_AUDIO_SPDIFIN_ LB_CTRL0 0x1f0

Bits	R/W	Default	Description
31	R/W	0x0000-0000	reg_work_enable, 0: disable; 1:enable;
30	R/W		reg_chnum_sel, 0: ch_num = 0~383(include frame cnt); 1: ch_num = 0~1(only L/R);
29	R/W		reg_rst_afifo_out_n, reset afifo out side;
28	R/W		reg_rst_afifo_in_n, reset afifo in side; need set 1 after set reg_rst_afifo_out_n to 1;
26	R/W		reg_chunm_en; 1: start add ch_cnt to ch_num;
25	R/W		reg_findpapb_en, 0: disable NonPCM mode; 1: enable;
24	R/W		reg_clk_inv; 0: sample spdif by posedge; 1: sample spdif by negedge;
23:12	R/W		reg_nonpcm2pcm_th, when detected NonPcm mode;if long time (z_cnt > = th) didn't detect PaPb again, will generate interrupt to SW: now changed to PCM mode;
11:8	R/W		reg_ch_status_sel, For EE_AUDIO_SPDIFIN_STAT1
7	R/W		reg_mute_l, 0: disable ; 1: mute channel L;
6	R/W		reg_mute_r, 0: disable ; 1: mute channel R;
5:4	R/W		reg_spdifin_src_sel, 0: PAD of spdifin;1: spdifout;
3	R/W		reg_check_valid, 0: disable valid check ; 1: enable;
2	R/W		reg_check_parity, 0: disable parity check ; 1: enable;
1	R/W		reg_invert_data, 0: disable; 1: invert [27:4] to [4:27];
0	R/W		reg_spdifin_phase, 0: disable invert; 1: enable;

Table 11-422 EE_AUDIO_SPDIFIN_ LB_CTRL1 0x1f1

Bits	R/W	Default	Description
27:20	R/W		reg_interrupt_mask, mask each interrupt;

Amlogic Proprietary and Confidential
Copyright © Amlogic. All rights reserved.

Table 11-423 EE_AUDIO_SPDIFIN_ LB_CTRL6 0x1f6

Bits	R/W	Default	Description
31:24	R/W	0x0000-0000	Reg_clr_internal_sts[7:0]; 7: clear valid bit status; 6: clear parity bit status; 5: clear ch status; 4: clear z_cnt status; 3: clear find_nonpcm status; 2: clear pd_data status; 1: clear pc_data status; 0: clear find_papb status;
23:16	R/W		Reg_clr_interrupt[7:0] for each bit of irq_status[7:0];
13	R/W		reg_irq_mode; 1: level mode; 0: pulse mode;
8	R/W		reg_papb_ext_sync, 1: add ext "0" sync check for papb; 0: disable;
7:0	R/W		reg_papb_ext_mask, mask 8 channel "0" sync

Table 11-424 EE_AUDIO_SPDIFIN_ LB_STAT0 0x1f7

Bits	R/W	Default	Description
31	R/W	0x0000-0000	Valid bit
11:8	R/W		afifo_cnt[3:0]
7:0	R/W		r_interrupt_status, interrupt status, need clear by reg_clk_interrupt; [7]: find PaPb; [6]: valid changed; [5]: find nonpcm to pcm (reg_nonpcm2pcm_th) ; [4]: find Pc or Pd changed; [3]: find CH status changed; [2]: find sample mode changed; [1]: find parity error; [0]: find overflow;

Table 11-425 EE_AUDIO_SPDIFIN_ LB_STAT1 0x1f8

Bits	R/W	Default	Description
31:0	R/W	0x0000-0000	channel status, by reg_ch_status_sel; reg_ch_status_sel[3]: 0: channel A; 1: channel B; reg_ch_status_sel[2:0]: 0: ch_status[31:0]; 1: ch_status[63:32]; 2: ch_status[95:64]; 3: ch_status[127:96]; 4: ch_status[159:128]; 5: ch_status[191:160]; 6: pc[15:0],pd[15:0];

Table 11-426 EE_AUDIO_SPDIFIN_ LB_MUTE_VAL 0x1fa

Bits	R/W	Default	Description
31:0	R/W	0x0000-0000	reg_spdifin_mute_val, when muted, the channel value

Amlogic Proprietary and Confidential
Copyright © Amlogic. All rights reserved.

11.11.9 ResampleA Registers

Base Address: 0xFE33_1C00

Each register final address = module base address+ address * 4

Table 11-427 AUDIO_RSAMP_CTRL0 0x000

Bit(s)	R/W	Default	Description
2	R/W	0	reg_lock_rst, phase_lock module software reset
1	R/W	0	reg_rsamp_rst, resample_core module software reset
0	R/W	0	reg_sw_rst, resample_top module software reset

Table 11-428 AUDIO_RSAMP_CTRL1 0x001

Bit(s)	R/W	Default	Description
25	R/W	0	reg_rsamp_rst_sel 1:resample_core use hardware as reset 0:resample_core use software reg_rsamp_rst as reset
24	R/W	0	reg_module_bypas 1: bypass resamp_top, input source direct output 0: resamp_top work
23:18	R/W	0	reg_gclk_ctrl, clk gate
17:13	R/W	23	reg_in_msb
12	R/W	0	reg_output_en,is used for source switch
11	R/W	0	reg_rsamp_en : It is used to enable the resample module. 1=enable, 0 = disable
10	R/W	0	reg_filt_en :It is used to enable the AA filter to downsample the input data. 1=enable, 0 = disable
9	R/W	0	reg_post_en : It is used to enable the compensation filter. 1= enable , 0= disable
8	R/W	0	reg_inp_mux_mode
3:0	R/W	0	reg_inp_mux

Table 11-429 AUDIO_RSAMP_CTRL2 0x002

Bit(s)	R/W	Default	Description
29:24	R/W	2	reg_chx_size : It is used to set the channel number.
17:16	R/W	0	reg_scl_step 0: 1/1 1: 1/2 2: 1/4
15:8	R/W	63	reg_filt_tap : It is used to set the taps of the AA filter.
7:0	R/W	63	reg_intp_tap : It is used to set the tap of the interpolation filter.

Amlogic Proprietary and Confidential
Copyright © Amlogic. All rights reserved.

Table 11-430 AUDIO_RSAMP_PHSINIT 0x003

Bit(s)	R/W	Default	Description
27:0	R/W	0	reg_init_phs : It is used to set the initial phase for accumulator.

Table 11-431 AUDIO_RSAMP_PHSSTEP 0x004

Bit(s)	R/W	Default	Description
30:0	R/W	0x8000-000	reg_rsamp_step: It is used to set the step size for accumulator. It can be calculated by: Fs_in/down_ratio/fs_out*2^28, where fs_in is the frequency of input data,fs_out is the frequency of output data,down_ratio is the down sample ratio.

Table 11-432 AUDIO_RSAMP_SHIFT 0x005

Bit(s)	R/W	Default	Description
31:24	R/W	23	reg_rsft_iir : It is used to set the shift bit for compensation IIR filter.
23:16	R/W	21	reg_rsft_blnd :It is used to set the shift bit for blending.
15:8	R/W	31	reg_rsft_sinc : It is used to set the shift bit for interpolation filter.
7:0	R/W	31	reg_rsft_aa □It is used to set the shift bit for anti-alias filter.

Table 11-433 AUDIO_RSAMP_ADJ_CTRL0 0x006

Bit(s)	R/W	Default	Description
2	R/W	0	reg_rsamp_adj_out_inv : It is used to set the direction for adjusting.
1	R/W	0	reg_rsamp_adj_force_en : It is used to enable forcing a adjustment value for accumulator step. 1= enable,0=disable
0	R/W	0	reg_rsamp_adj_en : It is used to enable the auto adjusting module.1=enable, 0= disable

Table 11-434 AUDIO_RSAMP_ADJ_CTRL1 0x007

Bit(s)	R/W	Default	Description
31:16	R/W	8	reg_rsamp_adj_odet_step
15:0	R/W	32768	reg_rsamp_adj_kmax : It is used to set the maximum value after loop filter.

Table 11-435 AUDIO_RSAMP_ADJ_SFT 0x008

Bit(s)	R/W	Default	Description
29	R/W	0	reg_rsamp_adj_dif_sel : It is used to select the input data for adjustment module.
28:24	R/W	9	reg_rsamp_adj_ki : It is used to set the ki of loop filter.
20:16	R/W	1	reg_rsamp_adj_kp : It is used to set the kp of loop filter
12:8	R/W	6	reg_rsamp_adj_ki_sft : It is used to set the shift value after ki multiplier.
5:0	R/W	12	reg_rsamp_adj_out_sft : It is used to set the adjustment output shift value.

Amlogic Proprietary and Confidential
Copyright © Amlogic. All rights reserved.

Table 11-436 AUDIO_RSAMP_ADJ_IDET_LEN 0x009

Bit(s)	R/W	Default	Description
31:0	R/W	10000	reg_rsamp_adj_idet_len : It is used to set the detection length for adjustment.

Table 11-437 AUDIO_RSAMP_ADJ_FORCE 0x00a

Bit(s)	R/W	Default	Description
31:0	R/W	8	reg_rsamp_adj_force_err: It is used to set the forcing err.

Table 11-438 AUDIO_RSAMP_ADJ_KI_FORCE 0x00b

Bit(s)	R/W	Default	Description
31:0	R/W	0	reg_rsamp_adj_ki_force : It is used to set a forcing value for ki adjustment.

Table 11-439 AUDIO_RSAMP_RO_STATUS 0x010

Bit(s)	R/W	Default	Description
31:0	R.O	0x0	ro_rsamp_stat : din_chx_chk_err, is_idle_st, rsamp_fifo_over_cnt[7:0]} : It is used report the working state for resample.

Table 11-440 AUDIO_RSAMP_RO_ADJ_FREQ 0x011

Bit(s)	R/W	Default	Description
31:0	R.O	0x0	ro_rsamp_adj_freq : It is used to report the the adjustment frequency.

Table 11-441 AUDIO_RSAMP_RO_ADJ_DIFF_BAK 0x012

Bit(s)	R/W	Default	Description
31:0	R.O	0x0	ro_det_diff_bak : It is used to report the difference for comparator.

Table 11-442 AUDIO_RSAMP_RO_ADJ_DIFF_DLT 0x013

Bit(s)	R/W	Default	Description
31:0	R.O	0x0	ro_det_diff_dlt : It is used to report the difference delta.

Table 11-443 AUDIO_RSAMP_RO_ADJ_PHS_ERR 0x014

Bit(s)	R/W	Default	Description
31:0	R.O	0x0	ro_det_phase_err : It is used to report the detection phase error.

Amlogic Proprietary and Confidential
Copyright © Amlogic. All rights reserved.

Table 11-444 AUDIO_RSAMP_RO_ADJ_KI_OUT 0x015

Bit(s)	R/W	Default	Description
31:0	R.O	0x0	ro_rsamp_ki_out : It is used to report the out of integration branch.

Table 11-445 AUDIO_RSAMP_RO_IN_CNT 0x016

Bit(s)	R/W	Default	Description
31:0	R.O	0x0	ro_rsamp_in_cnt : It is used to report the counter of input data .

Table 11-446 AUDIO_RSAMP_RO_OUT_CNT 0x017

Bit(s)	R/W	Default	Description
31:0	R.O	0x0	ro_rsamp_out_cnt : It is used to report the counter of output data.

Table 11-447 AUDIO_RSAMP_POST_COEF0 0x020

Bit(s)	R/W	Default	Description
31:0	R/W	0	reg_post_coef0 : It is used to set the coefficient of compensation filter.

Table 11-448 AUDIO_RSAMP_POST_COEF1 0x021

Bit(s)	R/W	Default	Description
31:0	R/W	0	reg_post_coef1 : It is used to set the coefficient of compensation filter.

Table 11-449 AUDIO_RSAMP_POST_COEF2 0x022

Bit(s)	R/W	Default	Description
31:0	R/W	0	reg_post_coef2 : It is used to set the coefficient of compensation filter.

Table 11-450 AUDIO_RSAMP_POST_COEF3 0x023

Bit(s)	R/W	Default	Description
31:0	R/W	0	reg_post_coef3 : It is used to set the coefficient of compensation filter.

Table 11-451 AUDIO_RSAMP_POST_COEF4 0x024

Bit(s)	R/W	Default	Description
31:0	R/W	0	reg_post_coef4 : It is used to set the coefficient of compensation filter.

Table 11-452 AUDIO_RSAMP_AA_COEF_ADDR 0x030

Bit(s)	R/W	Default	Description
31:0	R/W	0	reg_aa_coef_addr

Amlogic Proprietary and Confidential
Copyright © Amlogic. All rights reserved.

Table 11-453 AUDIO_RSAMP_AA_COEF_DATA 0x031

Bit(s)	R/W	Default	Description
31:0	R/W	0	reg_aa_coef_data

Table 11-454 AUDIO_RSAMP_SINC_COEF_ADDR 0x040

Bit(s)	R/W	Default	Description
31:0	R/W	0	reg_sinc_coef_addr

Table 11-455 AUDIO_RSAMP_SINC_COEF_DATA 0x041

Bit(s)	R/W	Default	Description
31:0	R/W	0	reg_sinc_coef_data

Amlogic Proprietary and Confidential
Copyright © Amlogic. All rights reserved.

11.11.10 TOACODEC Registers

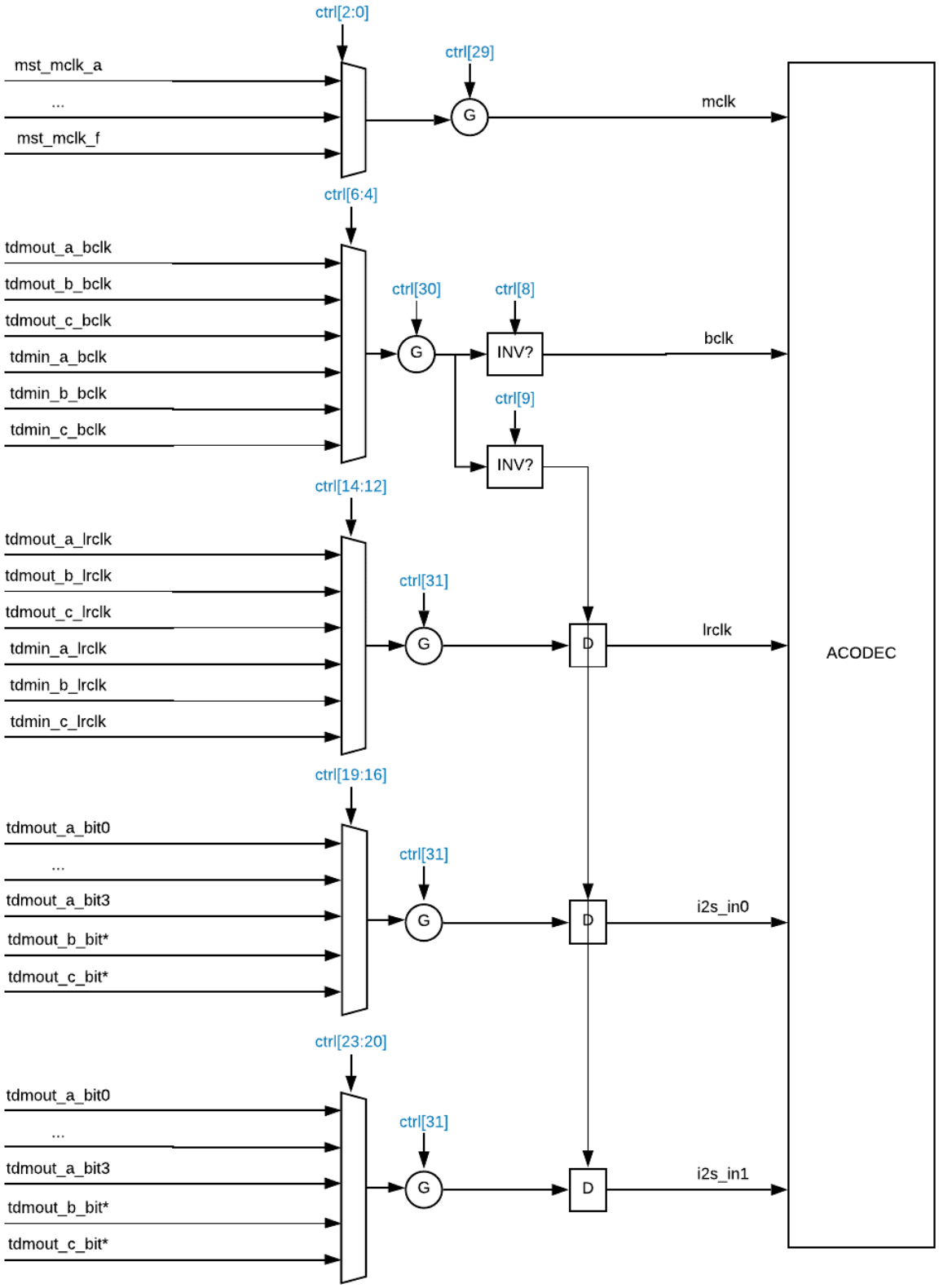

Amlogic Proprietary and Confidential
Copyright © Amlogic. All rights reserved.

Table 11-456 EE_AUDIO_TOACODEC_CTRL0 0x1d0

Bits	R/W	Default	Description
31	R/W	0x0000-0000	reg_toacodec_en_dat, 0: disable; 1: enable; step1: enable/disable mclk step2: enable/disable bclk step3: enable/disable dat
30	R/W		reg_toacodec_en_bclk, 0: disable; 1: enable;
29	R/W		reg_toacodec_en_mclk, 0: disable; 1: enable;
26:22	R/W		Dat1_sel: 0: tdmout_a_dat[0]; 1: tdmout_a_dat[1]; 2: tdmout_a_dat[2]; 3: tdmout_a_dat[3]; 4: tdmout_a_dat[4]; 5: tdmout_a_dat[5]; 6: tdmout_a_dat[6]; 7: tdmout_a_dat[7]; 8: tdmout_b_dat[0]; 9: tdmout_b_dat[1]; 10: tdmout_b_dat[2]; 11: tdmout_b_dat[3]; 12: tdmout_b_dat[4]; 13: tdmout_b_dat[5]; 14: tdmout_b_dat[6]; 15: tdmout_b_dat[7]; 16: tdmout_c_dat[0]; 17: tdmout_c_dat[1]; 18: tdmout_c_dat[2]; 19: tdmout_c_dat[3]; 20: tdmout_c_dat[4]; 21: tdmout_c_dat[5]; 22: tdmout_c_dat[6]; 23: tdmout_c_dat[7];
20:16	R/W		Dat0_sel: 0: tdmout_a_dat[0]; 1: tdmout_a_dat[1]; 2: tdmout_a_dat[2]; 3: tdmout_a_dat[3]; 4: tdmout_a_dat[4]; 5: tdmout_a_dat[5]; 6: tdmout_a_dat[6]; 7: tdmout_a_dat[7]; 8: tdmout_b_dat[0]; 9: tdmout_b_dat[1]; 10: tdmout_b_dat[2]; 11: tdmout_b_dat[3]; 12: tdmout_b_dat[4]; 13: tdmout_b_dat[5]; 14: tdmout_b_dat[6]; 15: tdmout_b_dat[7]; 16: tdmout_c_dat[0]; 17: tdmout_c_dat[1]; 18: tdmout_c_dat[2]; 19: tdmout_c_dat[3]; 20: tdmout_c_dat[4]; 21: tdmout_c_dat[5]; 22: tdmout_c_dat[6]; 23: tdmout_c_dat[7];
14:12	R/W		lrclk_sel: 0: tdmout_a_lrclk; 1: tdmout_b_lrclk; 2: tdmout_c_lrclk; 4: tdmin_a_lrclk; 5: tdmin_b_lrclk;

Amlogic Proprietary and Confidential
Copyright © Amlogic. All rights reserved.

Bits	R/W	Default	Description
			6: tdmin_c_lrclk;
10	R/W		Lrclk_inv; 1: invert lrclk;
9	R/W		Bclk_cap_inv: The dat_o and lrclk_o will captured for timing balance after select; If this bit set to 1, will use invert bclk to capture;
8	R/W		Bclk_o_inv: if set 1, the final bclk connect to acodec will invert;
6:4	R/W		Bclk_sel: 0: tdmout_a_bclk; 1: tdmout_b_bclk; 2: tdmout_c_bclk; 4: tdmin_a_bclk; 5: tdmin_b_bclk; 6: tdmin_c_bclk;
2:0	R/W		Mclk_sel: 0:mst_mclk_a; 1:mst_mclk_b; 2:mst_mclk_c; 3:mst_mclk_d; 4:mst_mclk_e; 5:mst_mclk_f;

Amlogic Proprietary and Confidential
Copyright © Amlogic. All rights reserved.

11.11.11 TOHDMITX Registers

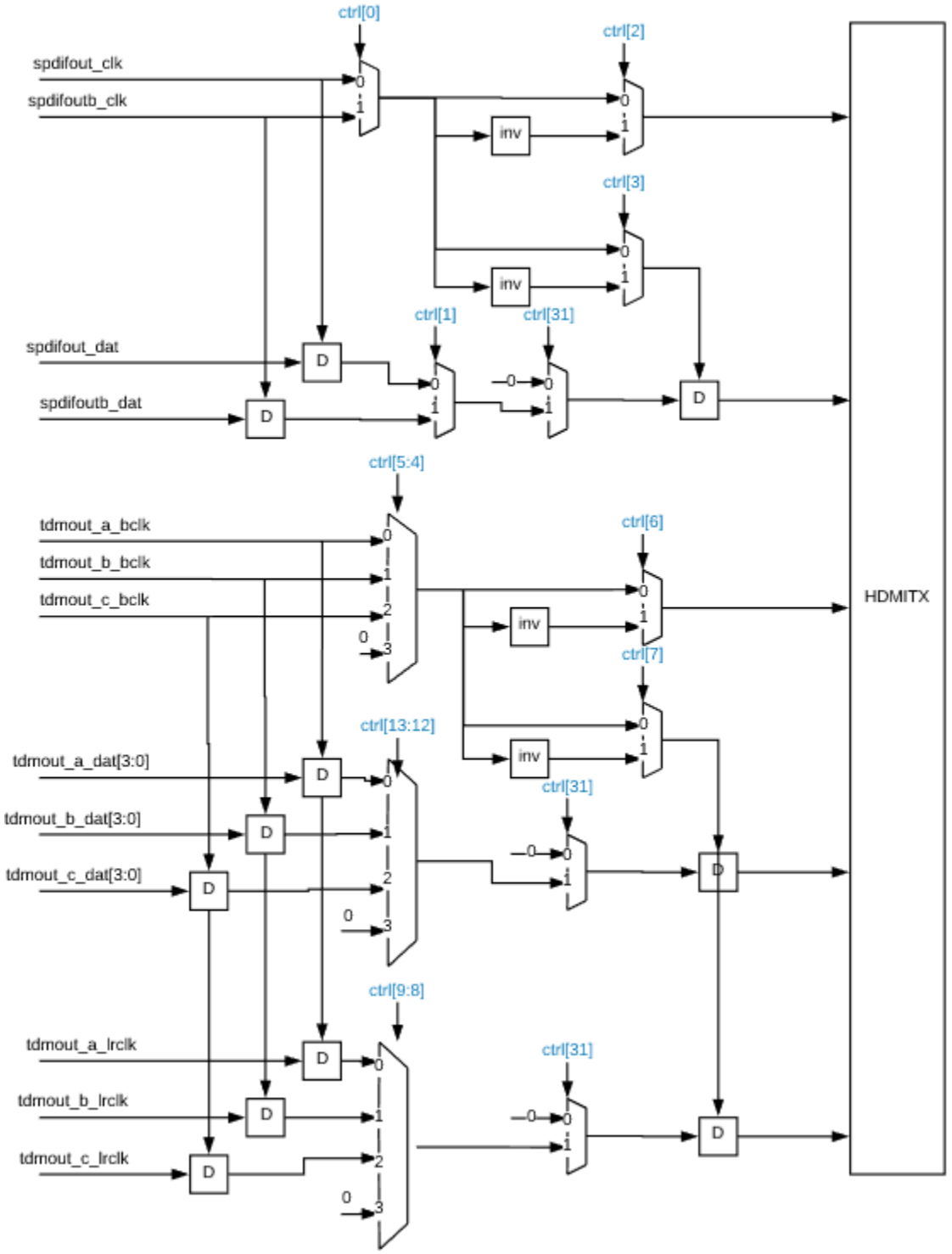

Amlogic Proprietary and Confidential
Copyright © Amlogic. All rights reserved.

Table 11-457 EE_AUDIO_TOHDMITX_CTRL0 0x1d1

Bits	R/W	Default	Description
31	R/W	0x0000-0000	reg_tohdmitx_spdif_en_dat, 0: disable; 1: enable; step1: enable/disable clk; step2: enable/disable dat;
30	R/W		reg_tohdmitx_spdif_en_clk, 0: disable; 1: enable;
29	R/W		reg_tohdmitx_i2s_en_dat, 0: disable; 1: enable; step1: enable/disable clk; step2: enable/disable dat;
28	R/W		reg_tohdmitx_i2s_en_clk, 0: disable; 1: enable;
27:20	R/W		reg_tohdmitx_mclk_div, if need div8, set to 7
19	R/W		reg_tohdmitx_mclk_en;
18:16	R/W		reg_tohdmitx_mclk_sel: 0: mst_mclk_a; 1: mst_mclk_b; 2: mst_mclk_c; 3: mst_mclk_d; 4: mst_mclk_e; 5: mst_mclk_f;
13:12	R/W		dat_sel: 0: tdmout_a_dat; 1: tdmout_b_dat; 2: tdmout_c_dat;
10	R/W		Lrclk_inv;
9:8	R/W		lrclk_sel: 0: tdmout_a_lrclk; 1: tdmout_b_lrclk; 2: tdmout_c_lrclk;
7	R/W		Bclk_cap_inv: The dat_o and lrclk_o will captured for timing balance after select; If this bit set to 1, will use invert bclk to capture;
6	R/W		Bclk_o_inv: if set 1, the final bclk connect to acodec will invert;
5:4	R/W		Bclk_sel: 0: tdmout_a_bclk; 1: tdmout_b_bclk; 2: tdmout_c_bclk;
3	R/W		Spdif_clk_cap_inv: The spdif_dat will captured for timing balance after select; If this bit set to 1, will use invert spdif_clk to capture;
2	R/W		Spdif_clk_o_inv: if set 1, the final bclk connect to hdmitx will invert;
1	R/W		Spdif_sel: 0:spdif_out; 1:spdif_out_b;
0	R/W		Spdif_clk_sel: 0:spdif_clk; 1:spdif_clk_b;

Amlogic Proprietary and Confidential
Copyright © Amlogic. All rights reserved.

11.11.12 FRHDMIRX

HDMIRX can send 3 audio signals:

- I2S, connect to TDMIN;
- SPDIF, connect to spdifin;
- DSD, include 8 lanes;

Figure 11-26 FRHDMIRX

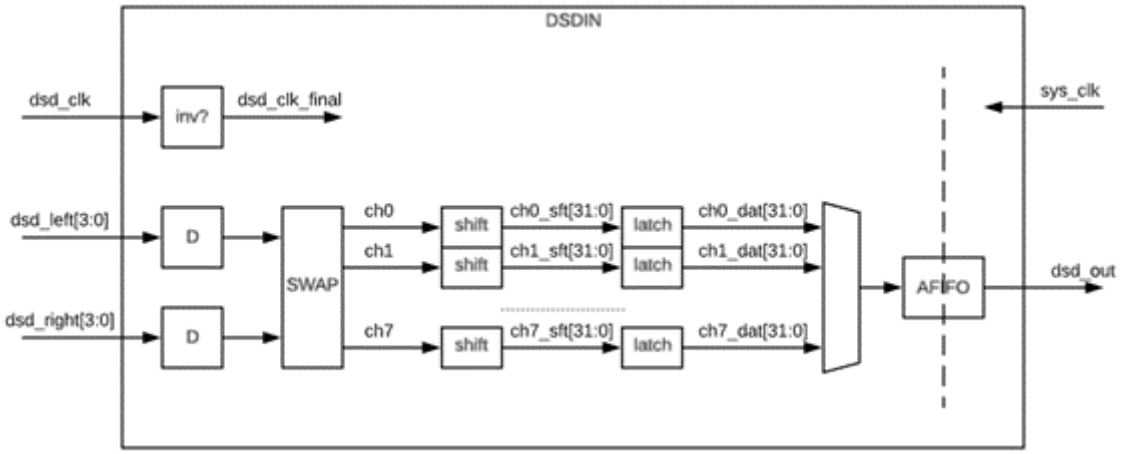

11.11.13 TOVAD Registers

Table 11-458 EE_AUDIO_TOVAD_CTRL0 0x1d2

Bits	R/W	Default	Description
31	R/W	0x0000-0000	reg_tovad_en, 0: disable; 1: enable;
30	R/W		reg_tovad_v_sel, 0: level; 1:pulse;
14:12	R/W		Data_sel: 0: tdmin_a; 1: tdmin_b; 2: tdmin_c; 3: spdifin; 4: pdmin; 5: loopback_b; 6: tdmin_lb; 7: loopback_a;

11.11.14 PDM Registers

Base Address: 0xFE331000

Each register final address = module base address+ address * 4

Amlogic Proprietary and Confidential
Copyright © Amlogic. All rights reserved.

Table 11-459 PDM_CTRL 0x00

Bits	R/W	Default	Description
31	R/W	0x0000-0000	PDM enable
30	R/W		invert the PDM_DCLK
29	R/W		output mode: 1: 24bits. 0: 32 bits
28	R/W		bypass mode. 1: bypass all filter. directly output the PDM input to DDR. 0: normal mode.
27:20	R/W		pdm_mute_mask[7:0]; [7] mute pdm ch7; … [0] mute pdm ch0;
19	R/W		train_en; 1: check value of capture data;
18	R/W		train_clr; 1: clear training status;
17	R/W		chnum_sel. 0: valid_cnt; 1: mask_cnt;
16	R/W		PDM Asynchronous FIFO soft reset. write 1 to soft reset AFIFO
15:8	R/W		PDM channel reset. 0: to reset each PDM channel. 1: normal mode
7:0	R/W		PDM channel enable. each bit for one channel

Table 11-460 PDM_HCIC_CTRL1 0x01

Bits	R/W	Default	Description
31	R/W	0x0000-0000	hcic filter enable. 1 use sinc filter. 0 bypass input to output
29:24	R/W		hcic final gain shift parameter
23:16	R/W		hcic final gain multiplier
8:4	R/W		hcic down sample rate
3:0	R/W		hcic stage number. must be between 3 to 9

PDM_HCIC_CTRL2 0x02

Table 11-461 PDM_F1_CTRL 0x03

Bits	R/W	Default	Description
31	R/W	0x0000-0000	filter 1 enable
17:16	R/W		f1 round mode. 2'b00 : sign bit at bit 49. 28bits output [49:22] round at bit 21. 32bits output [49:18]. 24bits output [49:26] 2'b01 : sign bit at bit 50. 28bits output [50:23] round at bit 22. 32bits output [49:18]. 24bits output [49:26] 2'b10 : sign bit at bit 51. 28bits output [51:24] round at bit 23 32bits output [49:18]. 24bits output [49:26].
15:12	R/W		filter 1 down sample rate
8:0	R/W		filter 1 stage number

Amlogic Proprietary and Confidential
Copyright © Amlogic. All rights reserved.

Table 11-462 PDM_F2_CTRL 0x04

Bits	R/W	Default	Description
31	R/W	0x0000-0000	filter 2 enable
17:16	R/W		F2 round mode. 2'b00 : round at bit 21. 2'b01 : round at bit 22.2'b10 : round at bit 23
15:12	R/W		filter 2 down sample rate
8:0	R/W		filter 2 stage number

Table 11-463 PDM_F3_CTRL 0x05

Bits	R/W	Default	Description
31	R/W	0x0000-0000	filter 3 enable
17:16	R/W		F3 round mode. 2'b00 : round at bit 21. 2'b01 : round at bit 22.2'b10 : round at bit 23
15:12	R/W		filter 3 down sample rate
8:0	R/W		filter 3 stage number

Table 11-464 PDM_HPF_CTRL 0x06

Bits	R/W	Default	Description
31	R/W	0x0000-0000	High pass filter enable
20:16	R/W		high pass filter shift steps. 6~19 steps
15:0	R/W		high pass filter output factor

Table 11-465 PDM_CHAN_CTRL 0x07

Bits	R/W	Default	Description
31:24	R/W	0x0000-0000	Chan3 data sample pointer vs rise edge of the PDM_DCLK
23:16	R/W		Chan2 data sample pointer vs rise edge of the PDM_DCLK
15:8	R/W		Chan1 data sample pointer vs rise edge of the PDM_DCLK
7:0	R/W		Chan0 data sample pointer vs rise edge of the PDM_DCLK

Table 11-466 PDM_CHAN_CTRL1 0x08

Bits	R/W	Default	Description
31:24	R/W	0x0000-0000	Chan7 data sample pointer vs rise edge of the PDM_DCLK
23:16	R/W		Chan6 data sample pointer vs rise edge of the PDM_DCLK
15:8	R/W		Chan5 data sample pointer vs rise edge of the PDM_DCLK
7:0	R/W		Chan4 data sample pointer vs rise edge of the PDM_DCLK

Amlogic Proprietary and Confidential
Copyright © Amlogic. All rights reserved.

Table 11-467 PDM_COEFF_ADDR 0x09

Bits	R/W	Default	Description
8:0	R/W	0x0000-0000	address of the write/read of coeff data

Table 11-468 PDM_COEFF_DATA 0x0A

Bits	R/W	Default	Description
31:0	R/W	0x0000-0000	write/read data to coeff memory

Table 11-469 PDM_CLKG_CTRL 0x0B

Bits	R/W	Default	Description
6	R/W	0x0000-0000	filt_ctrl module auto clock gating control
5	R/W		sinc fifo module auto clock gating control
4	R/W		filter module auto clock gating control
3	R/W		apb module auto clock gating control
2	R/W		coeff memory module auto clock gating control
1	R/W		each channel module auto clock gating control
0	R/W		cts_pdm_clk auto clock gating control

Table 11-470 PDM_STS 0x0C

Bits	R/W	Default	Description
15:12	R	0x0000-0000	afifo count value
11:4	R		train result of 8 ch; 1: diff; 0: same;
1	R		HPF filter output overflow. means the PCLK is too slow
0	R		HCIC filter output overflow. means the CTS_PDM_CLK is too slow. can't finished the filter function.

Table 11-471 PDM_MUTE_VALUE 0x0D

Bits	R/W	Default	Description
31:0	R/W	0x0000-0000	mute value if mute_mask = 1;

Amlogic Proprietary and Confidential
Copyright © Amlogic. All rights reserved.

Table 11-472 PDM_MASK_NUM 0x0E

Bits	R/W	Default	Description
15:0	R/W	0x0000-0000	When PDM power on, there are some invalid data because filter initialize. So set this register can mask these invalid data. If PDM out frequency is 48K, set MASK_NUM = 49 will mask 50/48k = 1.04ms.

Table 11-473 PDM_CHAN_CTRL2 0x0F

Bits	R/W	Default	Description
7:0	R/W	0x0000-0000	start fiter pointer vs rise edge of the PDM_DCLK need avoid close to data sample pointer which defined by PDM_CHAN_CTRL0/1

11.11.15 LOCKER Registers

Base Address: 0xFE331400

Each register final address = module base address+ address * 4

Table 11-474 AUD_LOCK_EN 0X00

Bit(s)	R/W	Default	Description
31:1			reserved
0	R/W	0x0	Audio_lock_en: 0 = disable; 1= enable.

Table 11-475 AUD_LOCK_SW_RESET 0X01

Bit(s)	R/W	Default	Description
31:1			reserved
0	R/W	0x0	Audio_lock_soft_reset: 1=generate soft reset pulse

Table 11-476 AUD_LOCK_SW_LATCH 0X02

Bit(s)	R/W	Default	Description
31:4			reserved
3	R/W	0x0	omclk2ref software latch: 1= generate the latch pulse
2	R/W	0x0	Ref2omclk software latch: 1= generate the latch pulse
1	R/W	0x0	Ref2imclk software latch: 1= generate the latch pulse
0	R/W	0x0	Imclk2ref software latch: 1= generate the latch pulse

Table 11-477 AUD_LOCK_HW_LATCH 0X03

Bit(s)	R/W	Default	Description
31:4			reserved
3	R/W	0x0	omclk2ref hardware latch enble: 1= enable□0= disable

Amlogic Proprietary and Confidential
Copyright © Amlogic. All rights reserved.

Bit(s)	R/W	Default	Description
2	R/W	0x0	Ref2omclk hardware latch enble: 1= enable□0= disable
1	R/W	0x0	Ref2imclk hardware latch enble: 1= enable□0= disable
0	R/W	0x0	Imclk2ref hardware latch enble: 1= enable□0= disable

Table 11-478 AUD_LOCK_REFCLK_SRC 0X04

Bit(s)	R/W	Default	Description
31:2			reserved
1:0	R/W	0x0	Ref clk source sel: 0= pclk; 1=oscinclk; 2,3,reserved

Table 11-479 AUD_LOCK_REFCLK_LAT_INT 0X05

Bit(s)	R/W	Default	Description
31:0			U32 number of reference clock cycles to latch the imclk and omclk

Table 11-480 AUD_LOCK_IMCLK_LAT_INT 0X06

Bit(s)	R/W	Default	Description
31:0			U32 number of imclk clock cycles to latch the reference clock

Table 11-481 AUD_LOCK_OMCLK_LAT_INT 0X07

Bit(s)	R/W	Default	Description
31:0			U32 number of omclk clock cycles to latch the reference clock

Table 11-482 AUD_LOCK_REFCLK_DS_INT 0X08

Bit(s)	R/W	Default	Description
31:10			reserved
9:0	R/W	0x0	U10 downsample step of reference clock for the couter48ds to be measured, module = x+1

Table 11-483 AUD_LOCK_IMCLK_DS_INT 0X09

Bit(s)	R/W	Default	Description
31:10			reserved
9:0	R/W	0x0	U10 downsample step of imclk for the couter48ds to be measured, module = x+1

Amlogic Proprietary and Confidential
Copyright © Amlogic. All rights reserved.

Table 11-484 AUD_LOCK_OMCLK_DS_INT 0X0a

Bit(s)	R/W	Default	Description
31:10			reserved
9:0	R/W	0x0	U10 downsample step of omclk for the couter48ds to be measured, module = x +1

Table 11-485 AUD_LOCK_INT_CLR 0X0b

Bit(s)	R/W	Default	Description
31:2			reserved
1	R/W	0x0	It is used to generate pulse to clear the interrupt status
0	R/W	0x0	It is used to generate pulse to clear the interrupt

Table 11-486 AUD_LOCK_GCLK_CTRL 0X0c

Bit(s)	R/W	Default	Description
31:4			reserved
3:2	R/W	0x0	It is used to gate the module clock
1	R/W	0x0	It is used to gate the register clock
0			reserved

Table 11-487 AUD_LOCK_INT_CTRL 0X0d

Bit(s)	R/W	Default	Description
31:4			reserved
3	R/W	0x0	It is used to mask interrupt for omclk_state
2	R/W	0x0	It is used to mask interrupt for imclk_state
1	R/W	0x0	It is used to mask interrupt for refclk_state1
0	R/W	0x0	It is used to mask interrupt for refclk_state0

Table 11-488 RO_REF2IMCLK_CNT_L 0X10

Bit(s)	R/W	Default	Description
31:0	R	0x0	U48 latched imclk counter48ds of each reg_refclk_latch_interval; Will start from 0 reaching 2^48

Table 11-489 RO_REF2IMCLK_CNT_H 0X11

Bit(s)	R/W	Default	Description
31:16			reserved
15:0	R	0x0	U48 latched imclk counter48ds of each reg_refclk_latch_interval; Will start from 0 reaching 2^48

Amlogic Proprietary and Confidential
Copyright © Amlogic. All rights reserved.

Table 11-490 RO_REF2OMCLK_CNT_L 0X12

Bit(s)	R/W	Default	Description
31:0	R	0x0	U48 latched omclk counter48ds of each reg_refclk_latch_interval; Will start from 0 reaching 2^48

Table 11-491 RO_REF2OMCLK_CNT_H 0X13

Bit(s)	R/W	Default	Description
31:16			reserved
15:0	R	0x0	U48 latched omclk counter48ds of each reg_refclk_latch_interval; Will start from 0 reaching 2^48

Table 11-492 RO_IMCLK2REF_CNT_L 0X14

Bit(s)	R/W	Default	Description
31:0	R	0x0	U48 latched reference clock counter48ds of each reg_imclk_latch_interval; Will start from 0 reaching 2^48

Table 11-493 RO_IMCLK2REF_CNT_H 0X15

Bit(s)	R/W	Default	Description
31:16			reserved
15:0	R	0x0	U48 latched reference clock counter48ds of each reg_imclk_latch_interval; Will start from 0 reaching 2^48

Table 11-494 RO_OMCLK2REF_CNT_L 0X16

Bit(s)	R/W	Default	Description
31:0	R	0x0	U48 latched reference clock counter48ds of each reg_omclk_latch_interval; Will start from 0 reaching 2^48

Table 11-495 RO_OMCLK2REF_CNT_H 0X17

Bit(s)	R/W	Default	Description
31:16			reserved
15:0	R	0x0	U48 latched reference clock counter48ds of each reg_omclk_latch_interval; Will start from 0 reaching 2^48

Table 11-496 RO_REFCLK_PKG_CNT 0X18

Bit(s)	R/W	Default	Description
31:16	R	0x0	U16,number of reference clk latch interval period conter for imclk latch
15:0	R	0x0	U16,number of reference clk latch interval period conter for imclk latch

Amlogic Proprietary and Confidential
Copyright © Amlogic. All rights reserved.

Table 11-497 RO_IMCLK_PKG_CNT 0X19

Bit(s)	R/W	Default	Description
31:16			reserved
15:0	R	0x0	U16, number of imclk latch interval period counter

Table 11-498 RO_OMCLK_PKG_CNT 0X1a

Bit(s)	R/W	Default	Description
31:16			reserved
15:0	R	0x0	U16, number of omclk latch interval period counter

Table 11-499 RO_AUD_LOCK_INT_STATUS 0X1b

Bit(s)	R/W	Default	Description
31:4			reserved
3	R	0x0	It is used to report interrupt status for omclk_state
2	R	0x0	It is used to report interrupt status for imclk_state
1	R	0x0	It is used to report interrupt status for refclk_state1
0	R	0x0	It is used to report interrupt status for refclk_state0

11.11.16 VAD Registers

Base Address: 0xFE331800

Each register final address = module base address+ address * 4

Table 11-500 VAD_TOP_CTRL0 0x0

Bits	R/W	Default	Description
31	R/W	0	vad_en
30	R/W	0	dec_fir_en
29	R/W	0	pre_emp_en
28	R/W	0	pre_ram_en
27	R/W	0	frame_his_en
26	R/W	0	frame_his_save_en
23	R/W	0	ceps_ceps_en
22	R/W	0	ceps_spec_en
21	R/W	0	post_dec_en
20	R/W	0	two_channel_en
10	R/W	0	soft_rst
9	R/W	0	dec_fir_soft_rst

Amlogic Proprietary and Confidential
Copyright © Amlogic. All rights reserved.

Bits	R/W	Default	Description
8	R/W	0	pre_emp_soft_rst
7	R/W	0	proc_soft_rst
6	R/W	0	frame_his_soft_rst
5	R/W	0	frame_his_save_soft_rst
4	R/W	0	ceps_win_soft_rst
3	R/W	0	ceps_fft_soft_rst
2	R/W	0	ceps_ceps_soft_rst
1	R/W	0	ceps_spec_soft_rst
0	R/W	0	post_dec_soft_rst

Table 11-501 VAD_TOP_CTRL1 0x1

Bits	R/W	Default	Description
31:30	R/W	0	vad_clk_gate
29:28	R/W	0	prepare_clk_gate
27:26	R/W	0	proc_clk_gate
25:24	R/W	0	frame_his_clk_gate
23:22	R/W	0	ceps_ceps_clk_gate
21:20	R/W	0	ceps_spec_clk_gate
19:18	R/W	0	ch_sel1_clk_gate
17:16	R/W	0	ch_sel0_clk_gate
7	R/W	0	vad_sw_reset
6	R/W	0	prepare_sw_reset
5	R/W	0	proc_sw_reset
4	R/W	0	frame_his_sw_reset
3	R/W	0	ceps_win_sw_reset
2	R/W	0	ceps_ceps_sw_reset
1	R/W	0	ceps_spec_sw_reset
0	R/W	0	post_dec_sw_reset

Table 11-502 VAD_TOP_CTRL2 0x2

Bits	R/W	Default	Description
25:24	R/W	0	ch1_shift □0:0, 1:1, 2:2, 3:3
9:8	R/W	0	ch0_shift□0:0, 1:1, 2:2, 3:3

Amlogic Proprietary and Confidential
Copyright © Amlogic. All rights reserved.

Table 11-503 VAD_FIR_CTRL 0x3

Bits	R/W	Default	Description
29:24	R/W	0	dec_filter_order
15:8	R/W	0	dec_filter_depthm1 ;> = filter pipe+ order
3:0	R/W	0	dec_rate;decimation_rate-1(0~11)

Table 11-504 VAD_FIR_EMP 0x4

Bits	R/W	Default	Description
9:0	R/W	0	pre_emp_coef :float unsigned

Table 11-505 VAD_FIR_COEF 0 0x5

Bits	R/W	Default	Description
31:16	R/W	0	dec_coef_0 : 8.1.1.7
15:0	R/W	0	dec_coef_1 : 8.1.1.7

Table 11-506 VAD_FIR_COEF 1 0x6

Bits	R/W	Default	Description
31:16	R/W	0	dec_coef_2 : 8.1.1.7
15:0	R/W	0	dec_coef_3 : 8.1.1.7

Table 11-507 VAD_FIR_COEF 2 0x7

Bits	R/W	Default	Description
31:16	R/W	0	dec_coef_4 : 8.1.1.7
15:0	R/W	0	dec_coef_5 : 8.1.1.7

Table 11-508 VAD_FIR_COEF 3 0x8

Bits	R/W	Default	Description
31:16	R/W	0	dec_coef_6 : 8.1.1.7
15:0	R/W	0	dec_coef_7 : 8.1.1.7

Table 11-509 VAD_FIR_COEF 4 0x9

Bits	R/W	Default	Description
31:16	R/W	0	dec_coef_8 : 8.1.1.7
15:0	R/W	0	dec_coef_9 : 8.1.1.7

Amlogic Proprietary and Confidential
Copyright © Amlogic. All rights reserved.

Table 11-510 VAD_FIR_COEF 5 0xa

Bits	R/W	Default	Description
31:16	R/W	0	dec_coef_10 : 8.1.1.7
15:0	R/W	0	dec_coef_11 : 8.1.1.7

Table 11-511 VAD_FIR_COEF 6 0xb

Bits	R/W	Default	Description
31:16	R/W	0	dec_coef_12 : 8.1.1.7
15:0	R/W	0	dec_coef_13 : 8.1.1.7

Table 11-512 VAD_FIR_COEF 7 0xc

Bits	R/W	Default	Description
31:16	R/W	0	dec_coef_14 : 8.1.1.7
15:0	R/W	0	dec_coef_15 : 8.1.1.7

Table 11-513 VAD_FIR_COEF 8 0xd

Bits	R/W	Default	Description
31:16	R/W	0	dec_coef_16 : 8.1.1.7
15:0	R/W	0	dec_coef_17 : 8.1.1.7

Table 11-514 VAD_FIR_COEF 9 0xe

Bits	R/W	Default	Description
31:16	R/W	0	dec_coef_18 : 8.1.1.7
15:0	R/W	0	dec_coef_19 : 8.1.1.7

Table 11-515 VAD_FIR_COEF 10 0xf

Bits	R/W	Default	Description
31:16	R/W	0	dec_coef_20 : 8.1.1.7
15:0	R/W	0	dec_coef_21 : 8.1.1.7

Table 11-516 VAD_FIR_COEF 11 0x10

Bits	R/W	Default	Description
31:16	R/W	0	dec_coef_22 : 8.1.1.7
15:0	R/W	0	dec_coef_23 : 8.1.1.7

Amlogic Proprietary and Confidential
Copyright © Amlogic. All rights reserved.

Table 11-517 VAD_FIR_COEF 12 0x11

Bits	R/W	Default	Description
31:16	R/W	0	dec_coef_24 : 8.1.1.7

Table 11-518 VAD_FRAME_CTRL0 0x12

Bits	R/W	Default	Description
31:30	R/W	0	frame_len 0: 64, 1: 128, 2: 256
26:24	R/W	0	pow_diff_dist:0:4, 1:8, 3:16, 5:24
17:16	R/W	0	pow_old_avglen:0:4, 1:8,3:16

Table 11-519 VAD_FRAME_CTRL1 0x13

Bits	R/W	Default	Description
11:0	R/W	0	pow_rampup_thr: 8.16.0.13, threshold for power ramp up detect

Table 11-520 VAD_FRAME_CTRL2 0x14

Bits	R/W	Default	Description
31:16	R/W	0	pow_cur_thr : 10.0.0.52
15:0	R/W	0	pow_cur_thr_high: 10.0.0.52

Table 11-521 VAD_CEP_CTRL0 0x15

Bits	R/W	Default	Description
29:28	R/W	0	ceps_decision_sel: 0 : ||, 1: &&, 2:naxm 3:maxmin
25:24	R/W	0	decision_sel_each:0 : ||, 1: &&, 2:spectral_entropy 3:ceps
20:16	R/W	0	login_min: 2^(-logn_min),5.5.0, [0~20]
10:0	R/W	0	ceps_log_blk: 11.6.1

Table 11-522 VAD_CEP_CTRL1 0x16

Bits	R/W	Default	Description
8:0	R/W	0	ceps_weight_step : 9,-3,0

Table 11-523 VAD_CEP_CTRL2 0x17

Bits	R/W	Default	Description
31:16	R/W	0	ceps_max_thr :16.9.1
15:0	R/W	0	ceps_maxmin_thr :16.9.1

Amlogic Proprietary and Confidential
Copyright © Amlogic. All rights reserved.

Table 11-524 VAD_CEP_CTRL3 0x18

Bits	R/W	Default	Description
31:24	R/W	0	ceps_det_start: [0~128]
23:16	R/W	0	ceps_det_end: [0~128], end> start
14:8	R/W	0	ceps_freq_blk_low: 0: no blk, 1blk[0], 2 blank [255 0 1]…
6:0	R/W	0	ceps_freq_blk_high: 0:no blk,1:blk[128],2 blk[127:129]…

Table 11-525 VAD_CEP_CTRL4 0x19

Bits	R/W	Default	Description
30:24	R/W	0	spectral_entropy_start: [0~127]
22:16	R/W	0	spectral_entropy_end: [0~127]

Table 11-526 VAD_CEP_CTRL5 0x1a

Bits	R/W	Default	Description
27:16	R/W	0	spectral_entropy_thr_max: 12.7.1
11:0	R/W	0	spectral_entropy_thr_min: 12.7.1

Table 11-527 VAD_DEC_CTRL 0x1b

Bits	R/W	Default	Description
29:28	R/W	0	decision_sel_combine: 0 is &, 1is |,2 is +
20:16	R/W	0	vadflag_confirm_m: < 32
5:0	R/W	0	vadflag_confirm_n

Table 11-528 VAD_TOP_STS0 0x1c

Bits	R/W	Default	Description
4	R	0	Afifo_err
3:0	R	0	lafifo_cnt

Table 11-529 VAD_TOP_STS1 0x1d

Bits	R/W	Default	Description
20	R	0	Pre_overflow
19	R	0	Pre_fst
18	R	0	Pre_val
17:0	R	0	Pre_dat

Amlogic Proprietary and Confidential
Copyright © Amlogic. All rights reserved.

Table 11-530 VAD_TOP_STS2 0x1e

Bits	R/W	Default	Description
18	R	0	Ceps_val
17:0	R	0	Ceps_dat

Table 11-531 VAD_FIR_STS0 0x1f

Bits	R/W	Default	Description
31:0	R	0	reserved

Table 11-532 VAD_FIR_STS1 0x20

Bits	R/W	Default	Description
31:-	R	0	reserved

Table 11-533 VAD_POW_STS0 0x21

Bits	R/W	Default	Description
31:16	R	0	reserved
15:0	R	0	Pow_o

Table 11-534 VAD_POW_STS1 0x22

Bits	R/W	Default	Description
31:0	R	0	reserved

Table 11-535 VAD_POW_STS2 0x23

Bits	R/W	Default	Description
31:0	R	0	reserved

Table 11-536 VAD_FFT_STS0 0x24

Bits	R/W	Default	Description
31	R	0	Ceps_done_latch
30	R	0	Spec_entropy_done
29	R	0	Cepstrum_done

Table 11-537 VAD_FFT_STS1 0x25

Bits	R/W	Default	Description
11:0	R	0	Se_o

Amlogic Proprietary and Confidential
Copyright © Amlogic. All rights reserved.

Table 11-538 VAD_SPE_STS0 0x26

Bits	R/W	Default	Description
31:16	R	0	Cepsw_o_h
15:0	R	0	Cepsw_o_l

Table 11-539 VAD_SPE_STS1 0x27

Bits	R/W	Default	Description
31:16	R	0	Cur_pow

Table 11-540 VAD_SPE_STS2 0x28

Bits	R/W	Default	Description
31:0	R	0	Calc_q_pre

Table 11-541 VAD_SPE_STS3 0x29

Bits	R/W	Default	Description
31:0	R	0	Reserved

Table 11-542 VAD_DEC_STS0 0x2a

Bits	R/W	Default	Description
31:0	R	0	Reserved

Table 11-543 VAD_DEC_STS1 0x2b

Bits	R/W	Default	Description
31:0	R	0	Reserved

Table 11-544 VAD_LUT_CTRL 0x2c

Bits	R/W	Default	Description
31	R/W	0	win_lut_w
30	R/W	0	win_lut_r
6:0	R/W	0	win_lut_addr

Table 11-545 VAD_LUT_WR 0x2d

Bits	R/W	Default	Description
31:0	R/W	0	Win_lut_wr:12.0.0.7

Amlogic Proprietary and Confidential
Copyright © Amlogic. All rights reserved.

Table 11-546 VAD_LUT_RD 0x2e

Bits	R/W	Default	Description
31:0	R	0	Win_lut_rd:12.0.0.7

Table 11-547 VAD_IN_SEL0 0x2f

Bits	R/W	Default	Description
31:0	R/W	0	ch0_sel: reg_vad.gen_vadin_coeff, bit[n] for ch_n enable

Table 11-548 VAD_IN_SEL1 0x30

Bits	R/W	Default	Description
31:0	R/W	0	Ch1_sel: reg_vad.gen_vadin_coeff, bit[n] for ch_n enable

Table 11-549 VAD_TO_DDR 0x31

Bits	R/W	Default	Description
31	R/W	0	vad_to_ddr_en
30	R/W	0	vad_to_ddr_rst
29	R/W	0	vad_to_ddr_eo
27:16	R/W	0	vad_to_ddr_cur_cnt
11:0	R/W	0	vad_to_ddr_max_cnt

11.11.17 EQDRC Registers

EQDRC Registers Base Address: 0xFE332000

Each register final address = module base address+ address * 4

Table 11-550 EE_AED_COEF_RAM_CNTL 0x0

Bits	R/W	Default	Description
31-10	R/W	0x0	reserved;
9-2	R/W	0x0	addr: read or write the addr of coef ram
1	R/W	0x0	rd/wr: 0 read from coef ram; 1 write to coef ram
0	R/W	0x0	valid: 0 the command had been finish; 1 the command wait to be done

Table 11-551 EE_AED_COEF_RAM_DATA 0x1

Bits	R/W	Default	Description
31-26	R/W	0x0	reserved;
25-0	R/W	0x0	data: read from coef ram or write to coef ram

Amlogic Proprietary and Confidential
Copyright © Amlogic. All rights reserved.

Table 11-552 EE_AED_EQ_EN 0x2

Bits	R/W	Default	Description
31-2	R/W	0x0	reserved;
1	R/W	0x0	eq2_en: It is used to enable EQ for ch3 and ch4. 1= enable, 0 = bypass.
0	R/W	0x0	eq1_en: It is used to enable EQ for ch1 and ch2. 1= enable, 0 = bypass.

Table 11-553 EE_AED_TAP_CNTL 0x3

Bits	R/W	Default	Description
31-26	R/W	0x0	reserved;
4-0	R/W	0xa	eq2_tap: It is used to set the tap for EQ2.
4-0	R/W	0xa	eq1_tap: It is used to set the tap for EQ1.

Table 11-554 EE_AED_EQ_VOLUME 0x4

Bits	R/W	Default	Description
31-30	R/W	0x2	volume_step: It is used to set volume adjust step.
29-26	R/W	0x0	reserved;
25-16	R/W	0x3ff	volume_master: It is used to set master volume.
15-8	R/W	0x30	volume_ch2: It is used to set channel2 volume.
7-0	R/W	0x30	volume_ch1: It is used to set channel1 volume.

Table 11-555 EE_AED_EQ_VOLUME_SLEW_CNT 0x5

Bits	R/W	Default	Description
31-12	R/W	0x0	reserved;
11-0	R/W	0x0	volume_slew_cnt: It is used to control volume change and mute ramp rate.

Table 11-556 EE_AED_MUTE 0x6

Bits	R/W	Default	Description
31	R/W	0x0	mute_master: It is used to mute all.
30-2	R/W	0x0	reserved;
1	R/W	0x0	mute_ch2: It is used to mute channel1.
0	R/W	0x0	mute_ch1: It is used to mute channel1.

Table 11-557 EE_AED_DRC_CNTL 0x7

Bits	R/W	Default	Description
31-6	R/W	0x0	reserved;
5-3	R/W	0x5	drc_tap: It is used to set the power tap for DRC.

Amlogic Proprietary and Confidential
Copyright © Amlogic. All rights reserved.

Bits	R/W	Default	Description
2	R/W	0x0	drc_pow_sel: It is used to select the input of gain alpha filter. 0 = dB domain, 1 = decimal domain
1	R/W	0x0	drc_rms_mode: It is used to select the mode of pow calculation. 0 = RMS, 1= peaking
0	R/W	0x0	drc_en: It is used to enable the post DRC. 1= enable, 0 = bypass.

Table 11-558 EE_AED_DRC_RMS_COEF0 0x8

Bits	R/W	Default	Description
31-26	R/W	0x0	reserved;
25-0	R/W	0x34ebb	It is used to set the coefficient for power calculation filter.

Table 11-559 EE_AED_DRC_RMS_COEF1 0x9

Bits	R/W	Default	Description
31-26	R/W	0x0	reserved;
25-0	R/W	0x7c-b145	It is used to set the coefficient for power calculation filter.

Table 11-560 EE_AED_DRC_THD0 0x0a

Bits	R/W	Default	Description
31-0	R/W	0x0	It is used to set the power threshold0 for DRC.

Table 11-561 EE_AED_DRC_THD1 0x0b

Bits	R/W	Default	Description
31-0	R/W	0x0	It is used to set the power threshold1 for DRC.

Table 11-562 EE_AED_DRC_THD2 0x0c

Bits	R/W	Default	Description
31-0	R/W	0x0	It is used to set the power threshold2 for DRC.

Table 11-563 EE_AED_DRC_THD3 0x0d

Bits	R/W	Default	Description
31-0	R/W	0x0	It is used to set the power threshold3 for DRC.

Table 11-564 EE_AED_DRC_THD4 0x0e

Bits	R/W	Default	Description
31-0	R/W	0x0	It is used to set the power threshold4 for DRC.

Amlogic Proprietary and Confidential
Copyright © Amlogic. All rights reserved.

Table 11-565 EE_AED_DRC_K0 0x0f

Bits	R/W	Default	Description
31-26	R/W	0x0	reserved;
25-0	R/W	0x40000	It is used to set the k-slope of gain for tap 0.

Table 11-566 EE_AED_DRC_K1 0x10

Bits	R/W	Default	Description
31-26	R/W	0x0	reserved;
25-0	R/W	0x40000	It is used to set the k-slope of gain for tap 1.

Table 11-567 EE_AED_DRC_K2 0x11

Bits	R/W	Default	Description
31-26	R/W	0x0	reserved;
25-0	R/W	0x40000	It is used to set the k-slope of gain for tap 2.

Table 11-568 EE_AED_DRC_K3 0x12

Bits	R/W	Default	Description
31-26	R/W	0x0	reserved;
25-0	R/W	0x40000	It is used to set the k-slope of gain for tap 3.

Table 11-569 EE_AED_DRC_K4 0x13

Bits	R/W	Default	Description
31-26	R/W	0x0	reserved;
25-0	R/W	0x40000	It is used to set the k-slope of gain for tap 4.

Table 11-570 EE_AED_DRC_K5 0x14

Bits	R/W	Default	Description
31-26	R/W	0x0	reserved;
25-0	R/W	0x40000	It is used to set the k-slope of gain for tap 5.

Table 11-571 EE_AED_DRC_THD_OUT0 0x15

Bits	R/W	Default	Description
31-0	R/W	0x0	It is used to set the power threshold_out0 for DRC.

Amlogic Proprietary and Confidential
Copyright © Amlogic. All rights reserved.

Table 11-572 EE_AED_DRC_THD_OUT1 0x16

Bits	R/W	Default	Description
31-0	R/W	0x0	It is used to set the power threshold_out1 for DRC.

Table 11-573 EE_AED_DRC_THD_OUT2 0x17

Bits	R/W	Default	Description
31-0	R/W	0x0	It is used to set the power threshold_out2 for DRC.

Table 11-574 EE_AED_DRC_THD_OUT3 0x18

Bits	R/W	Default	Description
31-0	R/W	0x0	It is used to set the power threshold_out3 for DRC.

Table 11-575 EE_AED_DRC_OFFSET 0x19

Bits	R/W	Default	Description
31-0	R/W	0x0	It is used to set the power offset of DRC.

Table 11-576 EE_AED_DRC_RELEASE_COEF00 0x1a

Bits	R/W	Default	Description
31-26	R/W	0x0	reserved;
25-0	R/W	0x5188	It is used to set the coefficient for gain release filter.

Table 11-577 EE_AED_DRC_RELEASE_COEF01 0x1b

Bits	R/W	Default	Description
31-26	R/W	0x0	reserved;
25-0	R/W	0x7fae78	It is used to set the coefficient for gain release filter.

Table 11-578 EE_AED_DRC_RELEASE_COEF10 0x1c

Bits	R/W	Default	Description
31-26	R/W	0x0	reserved;
25-0	R/W	0x5188	It is used to set the coefficient for gain release filter.

Table 11-579 EE_AED_DRC_RELEASE_COEF11 0x1d

Bits	R/W	Default	Description
31-26	R/W	0x0	reserved;
25-0	R/W	0x7fae78	It is used to set the coefficient for gain release filter.

Amlogic Proprietary and Confidential
Copyright © Amlogic. All rights reserved.

Table 11-580 EE_AED_DRC_RELEASE_COEF20 0x1e

Bits	R/W	Default	Description
31-26	R/W	0x0	reserved;
25-0	R/W	0x5188	It is used to set the coefficient for gain release filter.

Table 11-581 EE_AED_DRC_RELEASE_COEF21 0x1f

Bits	R/W	Default	Description
31-26	R/W	0x0	reserved;
25-0	R/W	0x7fae78	It is used to set the coefficient for gain release filter.

Table 11-582 EE_AED_DRC_RELEASE_COEF30 0x20

Bits	R/W	Default	Description
31-26	R/W	0x0	reserved;
25-0	R/W	0x5188	It is used to set the coefficient for gain release filter.

Table 11-583 EE_AED_DRC_RELEASE_COEF31 0x21

Bits	R/W	Default	Description
31-26	R/W	0x0	reserved;
25-0	R/W	0x7fae78	It is used to set the coefficient for gain release filter.

Table 11-584 EE_AED_DRC_RELEASE_COEF40 0x22

Bits	R/W	Default	Description
31-26	R/W	0x0	reserved;
25-0	R/W	0x5188	It is used to set the coefficient for gain release filter.

Table 11-585 EE_AED_DRC_RELEASE_COEF41 0x23

Bits	R/W	Default	Description
31-26	R/W	0x0	reserved;
25-0	R/W	0x7fae78	It is used to set the coefficient for gain release filter.

Table 11-586 EE_AED_DRC_RELEASE_COEF50 0x24

Bits	R/W	Default	Description
31-26	R/W	0x0	reserved;
25-0	R/W	0x5188	It is used to set the coefficient for gain release filter.

Amlogic Proprietary and Confidential
Copyright © Amlogic. All rights reserved.

Table 11-587 EE_AED_DRC_RELEASE_COEF51 0x25

Bits	R/W	Default	Description
31-26	R/W	0x0	reserved;
25-0	R/W	0x7fae78	It is used to set the coefficient for gain release filter.

Table 11-588 EE_AED_DRC_ATTACK_COEF00 0x26

Bits	R/W	Default	Description
31-26	R/W	0x0	reserved;
25-0	R/W	0x3263a	It is used to set the coefficient for gain attack filter.

Table 11-589 EE_AED_DRC_ATTACK_COEF01 0x27

Bits	R/W	Default	Description
31-26	R/W	0x0	reserved;
25-0	R/W	0x7cd9-c6	It is used to set the coefficient for gain attack filter.

Table 11-590 EE_AED_DRC_ATTACK_COEF10 0x28

Bits	R/W	Default	Description
31-26	R/W	0x0	reserved;
25-0	R/W	0x3263a	It is used to set the coefficient for gain attack filter.

Table 11-591 EE_AED_DRC_ATTACK_COEF11 0x29

Bits	R/W	Default	Description
31-26	R/W	0x0	reserved;
25-0	R/W	0x7cd9-c6	It is used to set the coefficient for gain attack filter.

Table 11-592 EE_AED_DRC_ATTACK_COEF20 0x2a

Bits	R/W	Default	Description
31-26	R/W	0x0	reserved;
25-0	R/W	0x3263a	It is used to set the coefficient for gain attack filter.

Table 11-593 EE_AED_DRC_ATTACK_COEF21 0x2b

Bits	R/W	Default	Description
31-26	R/W	0x0	reserved;
25-0	R/W	0x7cd9-c6	It is used to set the coefficient for gain attack filter.

Amlogic Proprietary and Confidential
Copyright © Amlogic. All rights reserved.

Table 11-594 EE_AED_DRC_ATTACK_COEF30 0x2c

Bits	R/W	Default	Description
31-26	R/W	0x0	reserved;
25-0	R/W	0x3263a	It is used to set the coefficient for gain attack filter.

Table 11-595 EE_AED_DRC_ATTACK_COEF31 0x2d

Bits	R/W	Default	Description
31-26	R/W	0x0	reserved;
25-0	R/W	0x7cd9-c6	It is used to set the coefficient for gain attack filter.

Table 11-596 EE_AED_DRC_ATTACK_COEF40 0x2e

Bits	R/W	Default	Description
31-26	R/W	0x0	reserved;
25-0	R/W	0x3263a	It is used to set the coefficient for gain attack filter.

Table 11-597 EE_AED_DRC_ATTACK_COEF41 0x2f

Bits	R/W	Default	Description
31-26	R/W	0x0	reserved;
25-0	R/W	0x7cd9-c6	It is used to set the coefficient for gain attack filter.

Table 11-598 EE_AED_DRC_ATTACK_COEF50 0x30

Bits	R/W	Default	Description
31-26	R/W	0x0	reserved;
25-0	R/W	0x3263a	It is used to set the coefficient for gain attack filter.

Table 11-599 EE_AED_DRC_ATTACK_COEF51 0x31

Bits	R/W	Default	Description
31-26	R/W	0x0	reserved;
25-0	R/W	0x7cd9-c6	It is used to set the coefficient for gain attack filter.

Table 11-600 EE_AED_DRC_LOOPBACK_CNTL 0x32

Bits	R/W	Default	Description
31-26	R/W	0x0	reserved;
17	R/W	0x0	dis_fifo_rst: 0 if drc_loopback_cnt change, then reset fifo; 1 don`t reset

Amlogic Proprietary and Confidential
Copyright © Amlogic. All rights reserved.

Bits	R/W	Default	Description
16	R/W	0x0	drc_loopback_bypass: It is used to set bypass look-ahead mode. 1= bypass.
15-9	R/W	0x0	reserved;
8-0	R/W	0x90	drc_loopback_cnt: It is used to set the look-ahead count.

Table 11-601 EE_AED_MDRC_CNTL 0x33

Bits	R/W	Default	Description
31-17	R/W	0x0	reserved;
16	R/W	0x0	mdrc_pow_sel: It is used to select the input of gain alpha filter. 0 = dB domain, 1 = decimal domain
15-9	R/W	0x0	reserved;
8	R/W	0x0	mdrc_all_en: It is used to enable the entire multi-band DRC. 1= enable, 0 = bypass.
7-6	R/W	0x0	reserved;
5-3	R/W	0x0	[3] mdrc_rms_mode: It is used to select the band0 mode of pow calculation. 0 = RMS, 1= peaking It is used to select the band1 mode of pow calculation. 0 = RMS, 1= peaking It is used to select the band2 mode of pow calculation. 0 = RMS, 1= peaking
2-0	R/W	0x0	[0] mdrc_en: It is used to enable the band 0 of MDRC. 1= enable, 0 = bypass. It is used to enable the band 1 of MDRC. 1= enable, 0 = bypass. It is used to enable the band 2 of MDRC. 1= enable, 0 = bypass.

Table 11-602 EE_AED_MDRC_RMS_COEF00 0x34

Bits	R/W	Default	Description
31-26	R/W	0x0	reserved;
25-0	R/W	0x34ebb	It is used to set the coefficient for power calculation filter.

Table 11-603 EE_AED_MDRC_RMS_COEF01 0x35

Bits	R/W	Default	Description
31-26	R/W	0x0	reserved;
25-0	R/W	0x7c-b145	It is used to set the coefficient for power calculation filter.

Table 11-604 EE_AED_MDRC_RELEASE_COEF00 0x36

Bits	R/W	Default	Description
31-26	R/W	0x0	reserved;
25-0	R/W	0x5188	It is used to set the coefficient for gain release filter.

Amlogic Proprietary and Confidential
Copyright © Amlogic. All rights reserved.

Table 11-605 EE_AED_MDRC_RELEASE_COEF01 0x37

Bits	R/W	Default	Description
31-26	R/W	0x0	reserved;
25-0	R/W	0x7fae78	It is used to set the coefficient for gain release filter.

Table 11-606 EE_AED_MDRC_ATTACK_COEF00 0x38

Bits	R/W	Default	Description
31-26	R/W	0x0	reserved;
25-0	R/W	0x3263a	It is used to set the coefficient for gain attack filter.

Table 11-607 EE_AED_MDRC_ATTACK_COEF01 0x39

Bits	R/W	Default	Description
31-26	R/W	0x0	reserved;
25-0	R/W	0x7cd9-c6	It is used to set the coefficient for gain attack filter.

Table 11-608 EE_AED_MDRC_THD0 0x3a

Bits	R/W	Default	Description
31-0	R/W	0x0	It is used to set the power threshold for DRC.

Table 11-609 EE_AED_MDRC_K0 0x3b

Bits	R/W	Default	Description
31-26	R/W	0x0	reserved;
25-0	R/W	0x0	It is used to set the k-slope of gain.

Table 11-610 EE_AED_MDRC_LOW_GAIN 0x3c

Bits	R/W	Default	Description
31-26	R/W	0x0	reserved;
25-0	R/W	0x0	It is used to set the gain for DRC band 0.

Table 11-611 EE_AED_MDRC_OFFSET0 0x3d

Bits	R/W	Default	Description
31-0	R/W	0x0	It is used to set the power offset of DRC.

Amlogic Proprietary and Confidential
Copyright © Amlogic. All rights reserved.

Table 11-612 EE_AED_MDRC_RMS_COEF10 0x3e

Bits	R/W	Default	Description
31-26	R/W	0x0	reserved;
25-0	R/W	0x34ebb	It is used to set the coefficient for power calculation filter.

Table 11-613 EE_AED_MDRC_RMS_COEF11 0x3f

Bits	R/W	Default	Description
31-26	R/W	0x0	reserved;
25-0	R/W	0x7c-b145	It is used to set the coefficient for power calculation filter.

Table 11-614 EE_AED_MDRC_RELEASE_COEF10 0x40

Bits	R/W	Default	Description
31-26	R/W	0x0	reserved;
25-0	R/W	0x5188	It is used to set the coefficient for gain release filter.

Table 11-615 EE_AED_MDRC_RELEASE_COEF11 0x41

Bits	R/W	Default	Description
31-26	R/W	0x0	reserved;
25-0	R/W	0x7fae78	It is used to set the coefficient for gain release filter.

Table 11-616 EE_AED_MDRC_ATTACK_COEF10 0x42

Bits	R/W	Default	Description
31-26	R/W	0x0	reserved;
25-0	R/W	0x3263a	It is used to set the coefficient for gain attack filter.

Table 11-617 EE_AED_MDRC_ATTACK_COEF11 0x43

Bits	R/W	Default	Description
31-26	R/W	0x0	reserved;
25-0	R/W	0x7cd9-c6	It is used to set the coefficient for gain attack filter.

Table 11-618 EE_AED_MDRC_THD1 0x44

Bits	R/W	Default	Description
31-0	R/W	0x0	It is used to set the power threshold for DRC.

Amlogic Proprietary and Confidential
Copyright © Amlogic. All rights reserved.

Table 11-619 EE_AED_MDRC_K1 0x45

Bits	R/W	Default	Description
31-26	R/W	0x0	reserved;
25-0	R/W	0x0	It is used to set the k-slope of gain.

Table 11-620 EE_AED_MDRC_OFFSET1 0x46

Bits	R/W	Default	Description
31-0	R/W	0x0	It is used to set the power offset of DRC.

Table 11-621 EE_AED_MDRC_MID_GAIN 0x47

Bits	R/W	Default	Description
31-26	R/W	0x0	reserved;
25-0	R/W	0x0	It is used to set the gain for DRC band 1.

Table 11-622 EE_AED_MDRC_RMS_COEF20 0x48

Bits	R/W	Default	Description
31-26	R/W	0x0	reserved;
25-0	R/W	0x34ebb	It is used to set the coefficient for power calculation filter.

Table 11-623 EE_AED_MDRC_RMS_COEF21 0x49

Bits	R/W	Default	Description
31-26	R/W	0x0	reserved;
25-0	R/W	0x7c-b145	It is used to set the coefficient for power calculation filter.

Table 11-624 EE_AED_MDRC_RELEASE_COEF20 0x4a

Bits	R/W	Default	Description
31-26	R/W	0x0	reserved;
25-0	R/W	0x5188	It is used to set the coefficient for gain release filter.

Table 11-625 EE_AED_MDRC_RELEASE_COEF21 0x4b

Bits	R/W	Default	Description
31-26	R/W	0x0	reserved;
25-0	R/W	0x7fae78	It is used to set the coefficient for gain release filter.

Amlogic Proprietary and Confidential
Copyright © Amlogic. All rights reserved.

Table 11-626 EE_AED_MDRC_ATTACK_COEF20 0x4c

Bits	R/W	Default	Description
31-26	R/W	0x0	reserved;
25-0	R/W	0x3263a	It is used to set the coefficient for gain attack filter.

Table 11-627 EE_AED_MDRC_ATTACK_COEF21 0x4d

Bits	R/W	Default	Description
31-26	R/W	0x0	reserved;
25-0	R/W	0x7cd9-c6	It is used to set the coefficient for gain attack filter.

Table 11-628 EE_AED_MDRC_THD2 0x4e

Bits	R/W	Default	Description
31-0	R/W	0x0	It is used to set the power threshold for DRC.

Table 11-629 EE_AED_MDRC_K2 0x4f

Bits	R/W	Default	Description
31-26	R/W	0x0	reserved;
25-0	R/W	0x0	It is used to set the k-slope of gain.

Table 11-630 EE_AED_MDRC_OFFSET2 0x50

Bits	R/W	Default	Description
31-0	R/W	0x0	It is used to set the power offset of DRC.

Table 11-631 EE_AED_MDRC_HIGH_GAIN 0x51

Bits	R/W	Default	Description
31-26	R/W	0x0	reserved;
25-0	R/W	0x0	It is used to set the gain for DRC band 1.

Table 11-632 EE_AED_ED_CNTL 0x52

Bits	R/W	Default	Description
31-2	R/W	0x0	reserved;
1	R/W	0x0	ed_sign:
0	R/W	0x0	ed_int: soft reset

Amlogic Proprietary and Confidential
Copyright © Amlogic. All rights reserved.

Table 11-633 EE_AED_DC_EN 0x53

Bits	R/W	Default	Description
31-1	R/W	0x0	reserved;
0	R/W	0x0	It is used to enable the noise detection. 1= enable, 0 = bypass.

Table 11-634 EE_AED_ND_LOW_THD 0x54

Bits	R/W	Default	Description
31-24	R/W	0x0	reserved;
23-0	R/W	0x100	It is used to set the low threshold for detection.

Table 11-635 EE_AED_ND_HIGH_THD 0x55

Bits	R/W	Default	Description
31-24	R/W	0x0	reserved;
23-0	R/W	0x200	It is used to set the high threshold for detection. If the signal amplitude is bigger than it, the signal is not noise.

Table 11-636 EE_AED_ND_CNT_THD 0x56

Bits	R/W	Default	Description
31-16	R/W	0x0	reserved;
15-0	R/W	0x100	It is used to set the counter threshold for amplitude detection. If the counter for which the signal is smaller than reg_nd_low_thd continuously is bigger than it, the signal is noise.

Table 11-637 EE_AED_ND_SUM_NUM 0x57

Bits	R/W	Default	Description
31-16	R/W	0x0	reserved;
15-0	R/W	0x200	It is used to set the statistical number for sum of signal amplitude.

Table 11-638 EE_AED_ND_CZ_SUM 0x58

Bits	R/W	Default	Description
31-16	R/W	0x0	reserved;
15-0	R/W	0x800	It is used to set the statistical number for zero-crossing.

Table 11-639 EE_AED_ND_SUM_THD0 0x59

Bits	R/W	Default	Description
31-0	R/W	0x20000	It is used to set the low threshold for sum of amplitude.

Amlogic Proprietary and Confidential
Copyright © Amlogic. All rights reserved.

Table 11-640 EE_AED_ND_SUM_THD1 0x5a

Bits	R/W	Default	Description
31-0	R/W	0x30000	It is used to set the high threshold for sum of amplitude.

Table 11-641 EE_AED_ND_CZ_THD0 0x5b

Bits	R/W	Default	Description
31-16	R/W	0x0	reserved;
15-0	R/W	0x200	It is used to set the low threshold for zero-crossing number.

Table 11-642 EE_AED_ND_CZ_THD1 0x5c

Bits	R/W	Default	Description
31-16	R/W	0x0	reserved;
15-0	R/W	0x100	It is used to set the high threshold for zero-crossing number.

Table 11-643 EE_AED_ND_COND_CNTL 0x5d

Bits	R/W	Default	Description
31-6	R/W	0x0	reserved;
5	R/W	0x0	Reg_nd_audio_cond2_en: It is used to enable the audio detection for amplitude.
4	R/W	0x0	Reg_nd_audio_cond1_en: It is used to enable the audio detection for amplitude.
3	R/W	0x0	Reg_nd_audio_cond0_en: It is used to enable the audio detection for amplitude.
2	R/W	0x0	Reg_nd_noise_cond2_en: It is used to enable the noise detection for amplitude.
1	R/W	0x0	Reg_nd_noise_cond1_en: It is used to enable the noise detection for amplitude.
0	R/W	0x0	Reg_nd_noise_cond0_en: It is used to enable the noise detection for amplitude.

Table 11-644 EE_AED_ND_RELEASE_COEF0 0x5e

Bits	R/W	Default	Description
31-26	R/W	0x0	reserved;
25-0	R/W	0x0	It is used to set the coefficients for release filter when gain adjusting.

Table 11-645 EE_AED_ND_RELEASE_COEF1 0x5f

Bits	R/W	Default	Description
31-26	R/W	0x0	reserved;
25-0	R/W	0x0	It is used to set the coefficients for release filter when gain adjusting.

Amlogic Proprietary and Confidential
Copyright © Amlogic. All rights reserved.

Table 11-646 EE_AED_ND_ATTACK_COEF0 0x60

Bits	R/W	Default	Description
31-26	R/W	0x0	reserved;
25-0	R/W	0x0	It is used to set the coefficients for attack filter when gain adjusting.

Table 11-647 EE_AED_ND_ATTACK_COEF1 0x61

Bits	R/W	Default	Description
31-26	R/W	0x0	reserved;
25-0	R/W	0x0	It is used to set the coefficients for attack filter when gain adjusting.

Table 11-648 EE_AED_ND_ATTACK_COEF1 0x61

Bits	R/W	Default	Description
31-26	R/W	0x0	reserved;
25-0	R/W	0x0	It is used to set the coefficients for attack filter when gain adjusting.

Table 11-649 EE_AED_ND_CNTL 0x62

Bits	R/W	Default	Description
31-3	R/W	0x0	reserved;
2-1	R/W	0x0	nd_gain_sel: It is used to set the gain when noise is detected. 0 = 1/2 1 = 1/4 2 = 1/8 3 = 0
0	R/W	0x0	It is used to enable the dc cut module. 1= enable, 0 = bypass.

Table 11-650 EE_AED_MIX0_LL 0x63

Bits	R/W	Default	Description
31-26	R/W	0x0	reserved;
25-0	R/W	0x40000	It is used to set the ch1 gain to ch1 mixer.

Table 11-651 EE_AED_MIX0_RL 0x64

Bits	R/W	Default	Description
31-26	R/W	0x0	reserved;
25-0	R/W	0x40000	It is used to set the ch2 gain to ch1 mixer.

Amlogic Proprietary and Confidential
Copyright © Amlogic. All rights reserved.

Table 11-652 EE_AED_MIX0_LR 0x65

Bits	R/W	Default	Description
31-26	R/W	0x0	reserved;
25-0	R/W	0x40000	It is used to set the ch1 gain to ch2 mixer.

Table 11-653 EE_AED_MIX0_RR 0x66

Bits	R/W	Default	Description
31-26	R/W	0x0	reserved;
25-0	R/W	0x40000	It is used to set the ch2 gain to ch2 mixer.

Table 11-654 EE_AED_CLIP_THD 0x67

Bits	R/W	Default	Description
31-23	R/W	0x0	reserved;
22-0	R/W	0x7fffff	It is used to set the clipping threshold.

Table 11-655 EE_AED_CH1_ND_SUM_OUT 0x68

Bits	R/W	Default	Description
31-0	R	0x0	It is used to report the sum of amplitude of ch1.

Table 11-656 EE_AED_CH2_ND_SUM_OUT 0x69

Bits	R/W	Default	Description
31-0	R	0x0	It is used to report the sum of amplitude of ch2.

Table 11-657 EE_AED_CH1_ND_CZ_OUT 0x6a

Bits	R/W	Default	Description
31-16	R	0x0	reserved;
15-0	R	0x0	It is used to report the sum of zero-crossing of ch1.

Table 11-658 EE_AED_CH2_ND_CZ_OUT 0x6b

Bits	R/W	Default	Description
31-16	R	0x0	reserved;
15-0	R	0x0	It is used to report the sum of zero-crossing of ch2.

Amlogic Proprietary and Confidential
Copyright © Amlogic. All rights reserved.

Table 11-659 EE_AED_NOISE_STATUS 0x6c

Bits	R/W	Default	Description
31-7	R	0x0	reserved;
6	R	0x0	It is used to report the noise flag.
5-3	R	0x0	It is used to report the audio state.
2-0	R	0x0	It is used to report the noise state.

Table 11-660 EE_AED_POW_CURRENT_S0 0x6d

Bits	R/W	Default	Description
-	R	0x0	reserved;
31-0	R	0x0	It is used to report the mdrc0 current power.

Table 11-661 EE_AED_POW_CURRENT_S1 0x6e

Bits	R/W	Default	Description
-	R	0x0	reserved;
31-0	R	0x0	It is used to report the mdrc1 current power.

Table 11-662 EE_AED_POW_CURRENT_S2 0x6f

Bits	R/W	Default	Description
-	R	0x0	reserved;
31-0	R	0x0	It is used to report the mdrc2 current power.

Table 11-663 EE_AED_POW_OUT0 0x70

Bits	R/W	Default	Description
-	R	0x0	reserved;
31-0	R	0x0	It is used to report the mdrc0 destination power.

Table 11-664 EE_AED_POW_OUT1 0x71

Bits	R/W	Default	Description
-	R	0x0	reserved;
31-0	R	0x0	It is used to report the mdrc1 destination power.

Table 11-665 EE_AED_POW_OUT2 0x72

Bits	R/W	Default	Description
-	R	0x0	reserved;
31-0	R	0x0	It is used to report the mdrc2 destination power.

Amlogic Proprietary and Confidential
Copyright © Amlogic. All rights reserved.

Table 11-666 EE_AED_ADJ_INDEX0 0x73

Bits	R/W	Default	Description
-	R	0x0	reserved;
31-0	R/W	0x0	It is used to report the mdrc0 adjusting power.

Table 11-667 EE_AED_ADJ_INDEX1 0x74

Bits	R/W	Default	Description
-	R	0x0	reserved;
31-0	R	0x0	It is used to report the mdrc1 adjusting power.

Table 11-668 EE_AED_ADJ_INDEX2 0x75

Bits	R/W	Default	Description
-	R	0x0	reserved;
31-0	R	0x0	It is used to report the mdrc2 adjusting power.

Table 11-669 EE_AED_DRC_GAIN_INDEX0 0x76

Bits	R/W	Default	Description
31-26	R	0x0	reserved;
25-0	R	0x0	It is used to report mdrc0 the gain.

Table 11-670 EE_AED_DRC_GAIN_INDEX1 0x77

Bits	R/W	Default	Description
31-26	R	0x0	reserved;
25-0	R	0x0	It is used to report mdrc0 the gain.

Table 11-671 EE_AED_DRC_GAIN_INDEX2 0x78

Bits	R/W	Default	Description
31-26	R	0x0	reserved;
25-0	R	0x0	It is used to report mdrc0 the gain.

Table 11-672 EE_AED_CH1_VOLUME_STATE 0x79

Bits	R/W	Default	Description
31-11	R	0x0	reserved;
10-0	R	0x0	It is used to report the volume state of ch1.

Amlogic Proprietary and Confidential
Copyright © Amlogic. All rights reserved.

Table 11-673 EE_AED_CH2_VOLUME_STATE 0x7a

Bits	R/W	Default	Description
31-11	R	0x0	reserved;
10-0	R	0x0	It is used to report the volume state of ch2.

Table 11-674 EE_AED_CH1_VOLUME_GAIN 0x7b

Bits	R/W	Default	Description
31-25	R	0x0	reserved;
25-0	R	0x0	It is used to report the volume gain of ch1.

Table 11-675 EE_AED_CH2_VOLUME_GAIN 0x7c

Bits	R/W	Default	Description
31-25	R	0x0	reserved;
25-0	R	0x0	It is used to report the volume gain of ch2.

Table 11-676 EE_AED_FULL_POW_CURRENT 0x7d

Bits	R/W	Default	Description
-	R	0x0	reserved;
31-0	R	0x0	It is used to report the current power.

Table 11-677 EE_AED_FULL_POW_OUT 0x7e

Bits	R/W	Default	Description
-	R	0x0	reserved;
31-0	R	0x0	It is used to report the destination power.

Table 11-678 EE_AED_FULL_POW_ADJ 0x7f

Bits	R/W	Default	Description
-	R	0x0	reserved;
31-0	R	0x0	It is used to report the adjusting power.

Table 11-679 EE_AED_FULL_DRC_GAIN 0x80

Bits	R/W	Default	Description
31-26	R	0x0	reserved;
25-0	R	0x0	It is used to report the gain.

Amlogic Proprietary and Confidential
Copyright © Amlogic. All rights reserved.

Table 11-680 EE_AED_MASTER_VOLUME_STATE 0x81

Bits	R/W	Default	Description
31-11	R	0x0	reserved;
10-0	R	0x0	It is used to report the volume state of master.

Table 11-681 EE_AED_MASTER_VOLUME_GAIN 0x82

Bits	R/W	Default	Description
31-26	R	0x0	reserved;
25-0	R	0x0	It is used to report the volume gain of master.

Table 11-682 EE_AED_AED_TOP_CTL0 0x83

Bits	R/W	Default	Description
31	R/W	0x0	reg_start_en:write 1 to start eqdrc function,will auto clear to 0
30	R/W	0x0	reg_sf_rst
29	R/W	0x0	reg_cfg_load
28-14	R/W	0x0	reserved;
13-11	R/W	0x0	reg_data_type:0: split 64bits ddr data to 8 sample, each sample need 8 bits; if bit-width < 8, left-justified; 1: split 64bits ddr data to 4 sample, each sample need 16 bits; if bitwidth < 16, left-justified ; 2: split 64bits ddr data to 4 sample, each sample need 16 bits; if bitwidth < 16, right-justified ; 3: split 64bits ddr data to 2 sample, each sample need 32 bits; if bitwidth < 32, left-justified; 4: split 64bits ddr data to 2 sample, each sample need 32 bits; if bitwidth < 32, right-justified;
10-6	R/W	0x0	reg_data_msb:msb position of data
5-3	R/W	0x0	reg_frddr_source: 0:frddr_A; 1:frddr_B; 2:frddr_C; 3:frddr_D; 4:frddr_E;
2	R/W	0x0	reg_afifo_in_rst: reset afifo in side;
1	R/W	0x0	reg_afifo_out_rst:reset afifo out side;
0	R/W	0x0	req_eqdrc_en:eqdrc module enable

Table 11-683 EE_AED_AED_TOP_CTL1 0x84

Bits	R/W	Default	Description
23-20	R/W	0x0	reg_ch2_sel:channel 2 data source select
19-16	R/W	0x0	reg_ch1_sel:channel 1 data source select
5	R/W	0x0	reg_eq_ch2_en :channel 2 eq enable

Amlogic Proprietary and Confidential
Copyright © Amlogic. All rights reserved.

Bits	R/W	Default	Description
4	R/W	0x0	reg_eq_ch1_en :channel 1 eq enable
3-0	R/W	0x0	reg_channel_valid: Valid channel number -1

Table 11-684 EE_AED_AED_TOP_CTL2 0x85

Bits	R/W	Default	Description
31	R/W	0x0	reg_ini_done_rst,when enable will auto rst at init_done negedge
30-20	R/W	0x0	reserved;
19-12	R/W	0x0	reg_ack_num: if needn't share buffer, set it as 0; if need share buffer , set it as TDMOUT/SPDIFOUT ch number;
11	R/W	0x0	reg_req_sel2_en
10-8	R/W	0x0	reg_req_sel2: 0: tdmout_a; 1: tdmout_b; 2: tdmout_c; 3: spdifout; 4: spdifout_b; 5: reserved; 6: reserved; 7: reserved;
7	R/W	0x0	reg_req_sel1_en
6-4	R/W	0x0	reg_req_sel1: 0: tdmout_a; 1: tdmout_b; 2: tdmout_c; 3: spdifout; 4: spdifout_b; 5: reserved; 6: reserved; 7: reserved;
3	R/W	0x0	reg_req_sel0_en
2-0	R/W	0x0	req_req_sel0: 0: tdmout_a; 1: tdmout_b; 2: tdmout_c; 3: spdifout; 4: spdifout_b; 5: reserved; 6: reserved; 7: reserved;

Table 11-685 EE_AED_AED_TOP_ST 0x86

Bits	R/W	Default	Description
29-20	RO	0x0	tofifo_dat_buf_valid_num
19-10	RO	0x0	frddr_dat_buf_valid_num
9	RO	0x0	r_frddr_init_done
8	RO	0x0	frddr_start

Amlogic Proprietary and Confidential
Copyright © Amlogic. All rights reserved.

Bits	R/W	Default	Description
7-4	RO	0x0	afifo_in_cnt
3-0	RO	0x0	afifo_out_cnt

11.11.18 EARC RX Registers

EARCRX_CMDC Registers

Base Address: 0xFF663800

Each register final address = module base address+ address * 4

Table 11-686 EARC_RX_CMDC_TOP_CTRL0 0x0

Bit(s)	R/W	Default	description
31	R/W	0	idle2_int 1: enable
30	R/W	0	idle1_int 1: enable
29	R/W	0	disc2_int 1: enable
28	R/W	0	disc1_int 1: enable
27	R/W	0	earc_int 1: enable
26	R/W	0	hb_status_int 1: enable
25	R/W	0	losthb_int 1: enable
24	R/W	0	timeout_int 1: enable
23	R/W	0	status_ch_int 1: enable
22	R/W	0	int_rec_invalid_id 1: enable
21	R/W	0	int_rec_invalid_offset 1: enable
20	R/W	0	int_rec_unexp 1: enable
19	R/W	0	int_rec_ecc_err 1: enable
18	R/W	0	int_rec_parity_err 1: enable
17	R/W	0	int_recv_packet 1: enable
16	R/W	0	int_rec_time_out 1: enable
15	R/W	0	cmdc_debug0 1: enable
14	R/W	0	cmdc_debug1 1: enable
13	R/W	0	cmdc_debug2 1: enable
12~7	R/W		reserved
6	R/W	0	mute_select 1: use bit5, 0: earc off
5	R/W	0	mute_contrl value of mannul mute control
4~0	R/W		reserved

Amlogic Proprietary and Confidential
Copyright © Amlogic. All rights reserved.

Table 11-687 EARC_RX_CMDC_TOP_CTRL1 0x1

Bit(s)	R/W	Default	Description
31~13	R/W		reserved
12~8	R/W	RW, 0	reg_scan_reg
7~5	R/W		reserved
4~0	R/W	RW, 0	reg_top_soft_rst

Table 11-688 EARC_RX_CMDC_TOP_CTRL2 0x2

Bit(s)	R/W	Default	Description
31	R/W	0	reset_idle2_int
30	R/W	0	reset_idle1_int
29	R/W	0	reset_disc2_int
28	R/W	0	reset_disc1_int
27	R/W	0	reset_earc_int
26	R/W	0	reset_hb_status_int
25	R/W	0	reset_losthb_int
24	R/W	0	reset_timeout_int
23	R/W	0	reset_status_ch_int
22	R/W	0	reset_int_rec_invalid_id
21	R/W	0	reset_int_rec_invalid_offset
20	R/W	0	reset_int_rec_unexp
19	R/W	0	reset_int_rec_ecc_err
18	R/W	0	reset_int_rec_parity_err
17	R/W	0	reset_int_recv_packet
16	R/W	0	reset_int_rec_time_out
15~00	R/W		reserved

Table 11-689 EARC_RX_CMDC_TIMER_CTRL0 0x3

Bit(s)	R/W	Default	Description
31~00	R	0	ro_cmdc_status0

Table 11-690 EARC_RX_CMDC_TIMER_CTRL1 0x4

Bit(s)	R/W	Default	Description
31~00	R	0	ro_cmdc_status0

Amlogic Proprietary and Confidential
Copyright © Amlogic. All rights reserved.

Table 11-691 EARC_RX_CMDC_TIMER_CTRL2 0x5

Bit(s)	R/W	Default	Description
31~00	R	0	ro_cmdc_status0

Table 11-692 EARC_RX_CMDC_TIMER_CTRL3 0x6

Bit(s)	R/W	Default	Description
31~00	R	0	ro_cmdc_status0

Table 11-693 EARC_RX_CMDC_VSM_CTRL0 0x7

Bit(s)	R/W	Default	Description
31	R/W	0	sw_state_update
30~28	R/W	0	sw_state
27	R/W	0	arc_initiated
26	R/W	0	arc_terminated
25	R/W	0	arc_enable
24	R/W	0	man_hpd
23~22	R/W	0	hpd_sel
21~20	R/W	0	hpd_sel_earc
19	R/W	0	comma_cnt_rst
18	R/W	0	timeout_status_rst
17	R/W	0	losthb_status_rst
16	R/W	0	force_rst
15	R/W	0	auto_state
14	R/W	0	cmdc_state_en
13~00	R/W		reserved

Table 11-694 EARC_RX_CMDC_VSM_CTRL1 0x8

Bit(s)	R/W	Default	Description
31~12	R/W	0	max_count_th idle done timing
11~8	R/W		reserved
7	R/W	0	reg_soft_rst idle done timing
6~4	R/W	0	time_sel idle done timing
3~2	R/W	0	soft_rst_sel idle done timing
1~0	R/W	0	enable_ctrl idle done timing

Amlogic Proprietary and Confidential
Copyright © Amlogic. All rights reserved.

Table 11-695 EARC_RX_CMDC_VSM_CTRL2 0x9

Bit(s)	R/W	Default	Description
31~12	R/W	0	max_count_th comma off done timing
11~8	R/W		reserved
7	R/W	0	reg_soft_rst comma off done timing
6~4	R/W	0	time_sel comma off done timing
3~2	R/W	0	soft_rst_sel comma off done timing
1~0	R/W	0	enable_ctrl comma off done timing

Table 11-696 EARC_RX_CMDC_VSM_CTRL3 0xa

Bit(s)	R/W	Default	Description
31~12	R/W	0	max_count_th earc_time out timing
11~8	R/W		reserved
7	R/W	0	reg_soft_rst earc_time out timing
6~4	R/W	0	time_sel earc_time out timing
3~2	R/W	0	soft_rst_sel earc_time out timing
1~0	R/W	0	enable_ctrl earc_time out timing

Table 11-697 EARC_RX_CMDC_VSM_CTRL4 0xb

Bit(s)	R/W	Default	Description
31~12	R/W	0	max_count_th heartbeat lost timing
11~8	R/W		reserved
7	R/W	0	reg_soft_rst heartbeat lost timing
6~4	R/W	0	time_sel heartbeat lost timing
3~2	R/W	0	soft_rst_sel heartbeat lost timing
1~0	R/W	0	enable_ctrl heartbeat lost timing

Table 11-698 EARC_RX_CMDC_VSM_CTRL5 0xc

Bit(s)	R/W	Default	Description
31~16	R/W		reserved
15~8	R/W	0	status_soft in earc heartbeat det timing
7	R/W	0	reg_soft_rst in earc heartbeat det timing
6	R/W	0	status_rst in earc heartbeat det timing
5~4	R/W		reserved
3~2	R/W	0	soft_rst_sel in earc heartbeat det timing
1~0	R/W	0	enable_ctrl in earc heartbeat det timing

Amlogic Proprietary and Confidential
Copyright © Amlogic. All rights reserved.

Table 11-699 EARC_RX_CMDC_VSM_CTRL6 0xd

Bit(s)	R/W	Default	Description
31~17	R/W		reserved
16	R/W	0	cntl_hpd_sel in earc heartbeat det timing
15~4	R/W	0	cntl_hpd_valid_width in earc heartbeat det timing
3~0	R/W	0	cntl_hpd_glitch_width in earc heartbeat det timing

Table 11-700 EARC_RX_CMDC_VSM_CTRL7 0xe

Bit(s)	R/W	Default	Description
31~00	R/W	0	vsm_ctrl7

Table 11-701 EARC_RX_CMDC_VSM_CTRL8 0xf

Bit(s)	R/W	Default	Description
31~00	R/W	0	vsm_ctrl8

Table 11-702 EARC_RX_CMDC_VSM_CTRL9 0x10

Bit(s)	R/W	Default	Description
31~00	R/W	0	vsm_ctrl9

Table 11-703 EARC_RX_CMDC_SENDER_CTRL0 0x11

Bit(s)	R/W	Default	Description
31~02	R/W		reserved
1	R/W	0	hb_chg_conf_auto
0	R/W	1,	hb_chg_auto

Table 11-704 EARC_RX_CMDC_PACKET_CTRL0 0x12

Bit(s)	R/W	Default	Description
31	R/W	0	packet_mode_enable packet control
30	R/W	0	free_enable packet control
29	R/W	0	soft_rst_man packet control
28~24	R/W	0	ready_th packet control
23~20	R/W		reserved
19~8	R/W	0	send_pre_th packet control
7~5	R/W		reserved

Amlogic Proprietary and Confidential
Copyright © Amlogic. All rights reserved.

Bit(s)	R/W	Default	Description
4	R/W	0	sw_state_update packet control
3~0	R/W	0	sw_state packet control

Table 11-705 EARC_RX_CMDC_PACKET_CTRL1 0x13

Bit(s)	R/W	Default	Description
31	R/W	0	ecc_endian send
30	R/W	0	pre_reg_st send
29~21	R/W		reserved
20~16	R/W	0	post_th send
15~14	R/W		reserved
13~8	R/W	0	pre_th
7~0	R/W	0	post_flag

Table 11-706 EARC_RX_CMDC_PACKET_CTRL2 0x14

Bit(s)	R/W	Default	Description
31~0	R/W	X	pre_flag unsigned,

Table 11-707 EARC_RX_CMDC_PACKET_CTRL3 0x15

Bit(s)	R/W	Default	Description
31	R/W	0	cmdc_en
30	R/W	0	cmdc_parity_mask
29	R/W	0	imeout_en w
28	R/W	0	ecc_check_en
27	R/W	0	rev_debug_en
26~16	R/W		reserved
15~0	R/W	0	timeout_th X

Table 11-708 EARC_RX_CMDC_PACKET_CTRL4 0x16

Bit(s)	R/W	Default	Description
31	R/W	0	ack_ignore
30	R/W	0	cmdc_tail_check_mask
29~20	R/W		reserved
19~0	R/W	0	cmdc_packet_head

Amlogic Proprietary and Confidential
Copyright © Amlogic. All rights reserved.

Table 11-709 EARC_RX_CMDC_PACKET_CTRL5 0x17

Bit(s)	R/W	Default	Description
31~24	R/W	0	rev_debug_mask
23~20	R/W		reserved
19~0	R/W	0	cmdc_packet_head_mask

Table 11-710 EARC_RX_CMDC_PACKET_CTRL6 0x18

Bit(s)	R/W	Default	Description
31~20	R/W	0	recv_pre_threshold packet control
19~9	R/W		reserved
8	R/W	0	rec_packet_d
7	R/W	0	rec_parity_err_cnt
6	R/W	0	rec_ecc_err_cnt
5	R/W	0	rec_unexp_cnt
4	R/W	0	rec_invalid_offset_cnt
3	R/W	0	rec_invalid_id_cnt
2	R/W	0	rec_timeout_cnt
1	R/W	0	rec_w_cnt
0	R/W	0	rec_r_cnt X

Table 11-711 EARC_RX_CMDC_BIPHASE_CTRL0 0x19

Bit(s)	R/W	Default	Description
31~24	R/W	7,	reg_tns
23~16	R/W	0	delay_th
15~10	R/W		reserved
9	R/W	0	send_ack_en
8	R/W	0	sq_val_en
7	R/W	0	biphase_send_soft_rst
6	R/W	0	comma_soft_rst
5	R/W	0	fifo_rst
4	R/W	0	receiver_no_sender
3	R/W	0	sender_free
2	R/W	0	receiver_send
1	R/W	0	receiver_earc
0	R/W	0	receiver_free

Amlogic Proprietary and Confidential
Copyright © Amlogic. All rights reserved.

Table 11-712 EARC_RX_CMDC_BIPHASE_CTRL1 0x1a

Bit(s)	R/W	Default	Description
31~16	R/W		reserved
15	R/W	send	ack_val_en
14~8	R/W		reserved
7~0	R/W	0	width send

Table 11-713 EARC_RX_CMDC_BIPHASE_CTRL2 0x1b

Bit(s)	R/W	Default	Description
31	R/W	0	ack_val_en send
30~20	R/W		reserved
19~16	R/W	0	ack_rate comma send
15~00	R/W	0	width comma sen

Table 11-714 EARC_RX_CMDC_BIPHASE_CTRL3 0x1c

Bit(s)	R/W	Default	Description
31~0	R/W	0	biphase_ctrl3

Table 11-715 EARC_RX_CMDC_DEVICE_ID_CTRL 0x1d

Bit(s)	R/W	Default	Description
31	R/W	0	apb_write apb bus wr/read
30	R/W	0	apb_read apb bus wr/read
29	R/W	0	apb_w_r_done apb bus wr/read
28	R/W	0	apb_w_r_reset apb bus wr/read
27~16	R/W		reserved
15~8	R/W	0	apb_w_r_id apb bus wr/read
7~0	R/W	0	apb_w_r_start_addr apb bus wr/read

Table 11-716 EARC_RX_CMDC_DEVICE_WDATA 0x1e

Bit(s)	R/W	Default	Description
31~08	R/W		reserved
7~00	R/W	0	apb_write_data apb bus wr/rea

Amlogic Proprietary and Confidential
Copyright © Amlogic. All rights reserved.

Table 11-717 EARC_RX_CMDC_DEVICE_RDATA 0x1f

Bit(s)	R/W	Default	Description
31~08	R/W		reserved
7~00	R/W	0	apb_read_data apb bus wr/rea

Table 11-718 EARC_RX_ANA_CTRL0 0x20

Bit(s)	R/W	Default	Description
31~00	R/W	0	ana_ctrl0

Table 11-719 EARC_RX_ANA_CTRL1 0x21

Bit(s)	R/W	Default	Description
31~00	R/W	0	ana_ctrl1

Table 11-720 EARC_RX_ANA_CTRL2 0x22

Bit(s)	R/W	Default	Description
31~00	R/W	0	ana_ctrl2

Table 11-721 EARC_RX_ANA_CTRL3 0x23

Bit(s)	R/W	Default	Description
31~00	R/W	0	ana_ctrl3

Table 11-722 EARC_RX_ANA_CTRL4 0x24

Bit(s)	R/W	Default	Description
31~00	R/W	0	ana_ctrl4

Table 11-723 EARC_RX_ANA_CTRL5 0x25

Bit(s)	R/W	Default	Description
31~00	R/W	0	ana_ctrl5

Table 11-724 EARC_RX_ANA_STAT0 0x26

Bit(s)	R/W	Default	Description
31~00	R	0	ro_ANA_status0

Amlogic Proprietary and Confidential
Copyright © Amlogic. All rights reserved.

Table 11-725 EARC_RX_CMDC_STATUS0 0x27

Bit(s)	R/W	Default	Description
31~00	R	0	ro_cmdc_status0

Table 11-726 EARC_RX_CMDC_STATUS1 0x28

Bit(s)	R/W	Default	Description
31~00	R	0	ro_cmdc_status1

Table 11-727 EARC_RX_CMDC_STATUS2 0x29

Bit(s)	R/W	Default	Description
31~00	R	0	ro_cmdc_status2

Table 11-728 EARC_RX_CMDC_STATUS3 0x2a

Bit(s)	R/W	Default	Description
31~00	R	0	ro_cmdc_status3

Table 11-729 EARC_RX_CMDC_STATUS4 0x2b

Bit(s)	R/W	Default	Description
31~00	R	0	ro_cmdc_status4

Table 11-730 EARC_RX_CMDC_STATUS5 0x2c

Bit(s)	R/W	Default	Description
31~00	R	0	ro_cmdc_status5

Table 11-731 EARC_RX_CMDC_STATUS6 0x2d

Bit(s)	R/W	Default	Description
31	R	0	ro_idle2_int
30	R	0	ro_idle1_int
29	R	0	ro_disc2_int
28	R	0	ro_disc1_int
27	R	0	ro_earc_int
26	R	0	ro_hb_status_int
25	R	0	ro_losthb_int
24	R	0	ro_timeout_int
23	R	0	ro_status_ch_int
22	R	0	ro_int_rec_invalid_id

Amlogic Proprietary and Confidential
Copyright © Amlogic. All rights reserved.

Bit(s)	R/W	Default	Description
21	R	0	ro_int_rec_invalid_offset
20	R	0	ro_int_rec_unexp
19	R	0	ro_int_rec_ecc_err
18	R	0	ro_int_rec_parity_err
17	R	0	ro_int_recv_packet
16	R	0	ro_int_rec_time_out
15~0	R		reserved

EARCRX_DMAC Registers

Base Address: 0xFF663C00

Each register final address = module base address+ address * 4

Table 11-732 EARCRX_DMAC_TOP_CTRL0 0x00

Bit(s)	R/W	default	Description
31	RW	0	top work enable
30	RW	0	top soft reset
29:23	RW	0	reserved
22:20	RW	0	dmac debug select
19:18	RW	0	reserved
17	RW	0	dmac sync without clk
16	RW	0	dmac sync without clk
15	RW	0	rst_n soft reset scan reg
14	RW	0	reserved
13	RW	0	rst_n sync clk_slow scan reg
12	RW	0	rst_n sync clk_analog scan reg
11	RW	0	clk_slow auto gate
10	RW	0	clk_analog auto gate
9:0	RW	0	reserved

Table 11-733 EARCRX_DMAC_SYNC_CTRL0 0x01

Bit(s)	R/W	default	Description
31	RW	0	dmac sync module work enable
30	RW	0	afifo out reset
29	RW	0	afifo in reset
28:17	RW	0	reserved
16	RW	0	data from analog delay enable

Amlogic Proprietary and Confidential
Copyright © Amlogic. All rights reserved.

Bit(s)	R/W	default	Description
15	RW	0	reserved
14:12	RW	0	delay cycles
11	RW	0	reserved
10:8	RW	0	valid last how many 0 will clear
7	RW	0	reserved
6:4	RW	0	valid last how may 1 will set
3:1	RW	0	reserved
0	RW	0	dmac data invert

Table 11-734 EARCRX_SPDIFIN_SAMPLE_CTRL0 0x03

Bit(s)	R/W	default	Description
31	RW	0	spdif in sample enable
30	RW	0	spdif in invert
29	RW	0	debug single enable
28	RW	0	0 detect by max_width 1 detect by min_width
27:23	RW	0	reserved
22:20	RW	0	value
19:0	RW	0	base timer to detect sample mode change

Table 11-735 EARCRX_SPDIFIN_SAMPLE_CTRL1 0x04

Bit(s)	R/W	default	Description
31	RW	0	0 auto detect sample mode 1 force a fixed sample mode with reg_sample_mode
30	RW	0	reserved
29:20	RW	0	mode0 threathold time
19:10	RW	0	mode1 threathold time
9:0	RW	0	mode2 threathold time

Table 11-736 EARCRX_SPDIFIN_SAMPLE_CTRL2 0x05

Bit(s)	R/W	default	Description
31:30	RW	0	reserved
29:20	RW	0	mode3 threathold time
19:10	RW	0	mode4 threathold time
9:0	RW	0	mode5 threathold time

Amlogic Proprietary and Confidential
Copyright © Amlogic. All rights reserved.

Table 11-737 EARCRX_SPDIFIN_SAMPLE_CTRL3 0x06

Bit(s)	R/W	default	Description
31:24	RW	0	mode0 sample time
23:16	RW	0	mode1 sample time
15:8	RW	0	mode2 sample time
7:0	RW	0	mode3 sample time

Table 11-738 EARCRX_SPDIFIN_SAMPLE_CTRL4 0x07

Bit(s)	R/W	default	Description
31:24	RW	0	mode4 sample time
23:16	RW	0	mode5 sample time
15:8	RW	0	mode6 sample time
7:0	RW	0	reserved

Table 11-739 EARCRX_SPDIFIN_SAMPLE_CTRL5 0x08

Bit(s)	R/W	default	Description
31	RW	0	dmac_sqout filter enable
30	RW	0	dmac_sqout invert
29:27	RW	0	dmac_sqout filter tick select,0:sys_clk 1:1us 2:10us 3:100us 4:1ms
26:24	RW	0	dmac_sqout filter select
23:20	RW	0	reserved
19:0	RW	0	dmac_sqout filter tick

Table 11-740 EARCRX_SPDIFIN_SAMPLE_STAT0 0x09

Bit(s)	R/W	default	Description
31	RO	0	reserved
30:28	RO	0	sample mode
27:18	RO	0	min width timer
17: 8	RO	0	max width timer
7	RO	0	spdif_sqout buf 2
6	RO	0	spdif_sqout
5:0	RO	0	reserved

Amlogic Proprietary and Confidential
Copyright © Amlogic. All rights reserved.

Table 11-741 EARCRX_SPDIFIN_SAMPLE_STAT1 0x0a

Bit(s)	R/W	default	Description
31:27	RO	0	reserved
26:16	RO	0	r_width_min when debug_en valid
15:9	RO	0	reserved
10:0	RO	0	r_width_max when debug_en valid

Table 11-742 EARCRX_SPDIFIN_MUTE_VAL 0x0b

Bit(s)	R/W	default	Description
31:0	RW	0	spdif in mute value

Table 11-743 EARCRX_SPDIFIN_CTRL0 0x0c

Bit(s)	R/W	default	Description
31	RW	0	spdifin work enable
30	RW	0	0 ch_num = 0~383 1 ch_num = 0~1
29:28	RW	0	reserved
27	RW	0	debug enable
26	RW	0	star add ch_cnt to ch_num
25	RW	0	papb check enalbe
24	RW	0	nonpcm2pcm_th enable
23:12	RW	0	if long time didn't detect PaPb again,will generate irq
11:8	RW	0	for stat1/stat2 select
7	RW	0	mute channel l
6	RW	0	mute channel r
5:4	RW	0	reserved
3	RW	0	valid check enable
2	RW	0	parity check enable
1	RW	0	spdif data invert
0	RW	0	reserved

Table 11-744 EARCRX_SPDIFIN_CTRL1 0x0d

Bit(s)	R/W	default	Description
31:24	RW	0	reserved
31:24	RW	0	internal irq status clear
23:12	RW	0	mute block check time thd
11:9	RW	0	mute block check tick sel

Amlogic Proprietary and Confidential
Copyright © Amlogic. All rights reserved.

Bit(s)	R/W	default	Description
8	RW	0	ext 0 sync check for papb
7:0	RW	0	sync 0 mask

Table 11-745 EARCRX_SPDIFIN_CTRL2 0x0e

Bit(s)	R/W	default	Description
31:24	RW	0	mute bit in channel st
23:19	RW	0	mute min block number to declare
18	RW	0	mute bit in channel st L or R
17	RW	0	mute block number check enable
16	RW	0	auto clear compress mode when channel status not compress
15	RW	0	auto clear compress mode when nonpcm2pcm
14	RW	0	auto change earc/arc
13	RW	0	user l or r channle status to check papb
12	RW	0	0:data valid after 1 block;1: in 1st block if exit papb ,data valid after papb
11	RW	0	start write toddr 1:from papb check,0 from preamble Z,valid when reg_earcin_ check_papb set
10	RW	0	auto reset will detect format change
9	RW	0	compress B pcpd select : 1:next 4th subframe data 0:next sub frame data
8:4	RW	0	papb msb position in data
3	RW	0	when in arc mode,spdif on force enable
2	RW	0	force value
1	RW	0	earc mode force enable
0	RW	0	force value

Table 11-746 EARCRX_SPDIFIN_CTRL3 0x0f

Bit(s)	R/W	default	Description
31:16	RW	0	earc mode pa value
15:0	RW	0	earc mode pb value

Table 11-747 EARCRX_SPDIFIN_STAT0 0x10

Bit(s)	R/W	default	Description
31	RO	0	r_valid_bit[0]
30	RO	0	r_spdifin_cps
29	RO	0	r_spdif_out_valid_mask
28:19	RO	0	reserved
18	RO	0	r_spdif_lr_flag

Amlogic Proprietary and Confidential
Copyright © Amlogic. All rights reserved.

Bit(s)	R/W	default	Description
17	RO	0	r_spdifin_v
16	RO	0	r_chst_mute
15:13	RO	0	r_data_rdy[2:0]
12	RO	0	c_spdifin_sel
11	RO	0	c_spdifin_valid_sel
10	RO	0	c_sample_stable_sel
9	RO	0	c_earc_mode
8	RO	0	r_spdifin_en
7	RO	0	r_dmacrx_en
6	RO	0	c_find_papb
5	RO	0	c_valid_change
4	RO	0	c_find_nonpcm2pcm
3	RO	0	c_pcpd_change
2	RO	0	c_ch_status_change
1	RO	0	i_sample_mode_change
0	RO	0	r_parity_err

Table 11-748 EARCRX_SPDIFIN_STAT1 0x11

Bit(s)	R/W	default	Description
31:0	RO	0	0: reg_spdifin_stat1 = r_ch_status_l[31:0] ; 1: reg_spdifin_stat1 = r_ch_status_l [63:32] ; 2: reg_spdifin_stat1 = r_ch_status_l[95:64] ; 3: reg_spdifin_stat1 = r_ ch_status_l[127:96] ; 4: reg_spdifin_stat1 = r_ch_status_l[159:128] ; 5: reg_spdi- fin_stat1 = r_ch_status_l[191:160] ; 6: reg_spdifin_stat1 = {r_pc_data,r_pd_da- ta}; 7: reg_spdifin_stat1 = 32'd0; 8: reg_spdifin_stat1 = r_ch_status_r[31:0] ; 9: reg_spdifin_stat1 = r_ch_status_r[63:32] ; 10: reg_spdifin_stat1 = r_ch_status_r [95:64] ; 11: reg_spdifin_stat1 = r_ch_status_r[127:96] ; 12: reg_spdifin_stat1 = r_ch_status_r[159:128] ; 13: reg_spdifin_stat1 = r_ch_status_r[191:160] ; 14: reg_spdifin_stat1 = {r_pc_data,r_pd_data} ; 15: reg_spdifin_stat1 = 32'd0;

Table 11-749 EARCRX_SPDIFIN_STAT2 0x12

Bit(s)	R/W	default	Description
31:0	RW	0	0 : r_z_width 1 : {16'd0,r_frame_cnt_min,r_frame_cnt_max}

Table 11-750 EARCRX_DMAC_UBIT_CTRL0 0x13

Bit(s)	R/W	default	Description
31	RW	0	dmac user bit decode enable
30:24	RW	0	iu sync value
23:16	RW	0	generate irq when fifo level pass some threthold
15	RW	0	max distance bewteen IUs to set lost

Amlogic Proprietary and Confidential
Copyright © Amlogic. All rights reserved.

Bit(s)	R/W	default	Description
14	RW	0	iu sync code enable 0 : all iu to fifo 1 only sync iu packet to fifo
13:12	RW	0	00 off 01 use l channel userbit 10 use r channel userbit 11 user lr channel userbit
11:8	RW	0	max distance bewteen IUs value
7	RW	0	fifo_thd irq enable
6	RW	0	when lost,initial fifo
5	RW	0	fifo initial
4:0	RW	0	user bit position in data

Table 11-751 EARCRX_IU_RDATA 0x14

Bit(s)	R/W	default	Description
31:8	RW	0	reserved
7:0	RW	0	iu data,read only

Table 11-752 EARCRX_ERR_CORRECT_CTRL0 0x16

Bit(s)	R/W	default	Description
31	RW	0	err correct work enable
30	RW	0	reserved
29	RW	0	reset afifo out side
28	RW	0	reset afifo in side
27:7	RW	0	reserved
6	RW	0	bch output 16bit data msb is 27 or 19
5	RW	0	bch output data revers
4	RW	0	bch input ecc msb/lsb
3	RW	0	bch input ecc revers
2	RW	0	bch input data revers
1	RW	0	0 off 1 compress audio mode
0	RW	0	force work mode enable

Table 11-753 EARCRX_ANA_RST_CTRL0 0x18

Bit(s)	R/W	default	Description
31	RW	0	analog reset check work enable
30	RW	0	analog reset from register enable
29	RW	0	soft reset value
28	RW	0	analog reset work enable 0: from bit31 1: from bit31 & top_work_en
27	RW	0	reserved
26:23	RW	0	when new format data in, hold reset after N posedge

Amlogic Proprietary and Confidential
Copyright © Amlogic. All rights reserved.

Bit(s)	R/W	default	Description
22:20	RW	0	earcrx_div2 hold thresthold tick select
19:0	RW	0	earcrx_div2 hold thresthold

Table 11-754 EARCRX_ANA_RST_CTRL1 0x19

Bit(s)	R/W	default	Description
31	RW	0	filter enable
30:28	RW	0	filter select
27:25	RW	0	filter tick sel,0:sys_clk 1:1us 2:10us 3:100us 4:1ms
24:16	RW	0	filter tick time
15	RW	0	filter enable
14:12	RW	0	filter select
11:9	RW	0	filter tick sel,0:sys_clk 1:1us 2:10us 3:100us 4:1ms
8:0	RW	0	filter tick time

EARCRX_TOP Registers

Base Address: 0xFF663E00

Each register final address = module base address+ address * 4

Table 11-755 EARCRX_TOP_CTRL0 0x00

Bit(s)	R/W	default	Description
31:10	RW	0	reserved
9:8	RW	0	top debug select
7	RW	0	force spdif_rx_en to reg_spdif_rx_en_force_value
6	RW	0	value
5	RW	0	force spdif_rx_sqen to reg_spdif_rx_sqe
4	RW	0	value
3	RW	0	force dmacrx_en to reg_dmacrx_en_force_value
2	RW	0	value
1	RW	0	force dmacrx_sqen to reg_dmacrx_sqen_force_value
0	RW	0	value

Table 11-756 EARCRX_DMAC_INT_MASK 0x01

Bit(s)	R/W	default	Description
31:18	RW	0	reserved
17:0	RW	0	dmac int mask

Amlogic Proprietary and Confidential
Copyright © Amlogic. All rights reserved.

Table 11-757 EARCRX_DMAC_INT_PENDING 0x02

Bit(s)	R/W	default	Description
31:18	RW	0	reserved
17:0	RW	0	dmac int pending,17 :earcrx_ana_rst c_new_format_set 16 :earcrx_ana_rst c_ earcrx_div2_hold_set 15 :earcrx_err_correct c_bcherr_int_set 14 :earcrx_err_ correct r_afifo_overflow_set 13 :earcrx_err_correct r_fifo_overflow_set 12 : earcrx_user_bit_check r_fifo_overflow 11 :earcrx_user_bit_check c_fifo_thd_ pass 10 :earcrx_user_bit_check c_u_pk_lost_int_set 9 :earcrx_user_bit_check c_iu_pk_end 8 :earcrx_biphase_decode c_chst_mute_clr 7 :earcrx_biphase_de- code c_find_papb 6 :earcrx_biphase_decode c_valid_change 5 :earcrx_bi- phase_decode c_find_nonpcm2pcm 4 :earcrx_biphase_decode c_pcpd_change 3 :earcrx_biphase_decode c_ch_status_change 2 :earcrx_biphase_decode i_ sample_mode_change 1 :earcrx_biphase_decode r_parity_err 0 :earcrx_dmac_ sync afifo_overflow

Table 11-758 EARCRX_CMDC_INT_MASK 0x03

Bit(s)	R/W	default	Description
31:16	RW	0	reserved
15:0	RW	0	cmdc int mask

Table 11-759 EARCRX_CMDC_INT_PENDING 0x04

Bit(s)	R/W	default	Description
31:16	RW	0	reserved
15:0	RO	0	cmdc int pending,15 : idle2_int 14 : idle1_int 13 : disc2_int 12 : disc1_int 11 : earc_int 10 : hb_status_int 9 : losthb_int 8 : timeout_int 7 : status_ch_int 6 : int_ rec_invalid_id 5 : int_rec_invalid_offset 4 : int_rec_unexp 3 : int_rec_ecc_err 2 : int_rec_parity_err 1 : int_recv_packet 0 : int_rec_time_out

Table 11-760 EARCRX_ANA_CTRL0 0x05

Bit(s)	R/W	default	Description
31	RW	0	earcrx_en_d2a
30:29	RW	0	reserved
28:24	RW	0	earcrx_cmdcrx_reftrim
23:20	RW	0	earcrx_idr_trim
19:15	RW	0	earcrx_rterm_trim
14:12	RW	0	earcrx_cmdctx_ack_hystrim
11:7	RW	0	earcrx_cmdctx_ack_reftrim
6	RW	0	earcrx_cmdcrx_vrefon_sel
5:4	RW	0	earcrx_cmdcrx_rcfilter_sel
2:0	RW	0	earcrx_cmdcrx_hystrim

Amlogic Proprietary and Confidential
Copyright © Amlogic. All rights reserved.

Table 11-761 EARCRX_ANA_CTRL1 0x06

Bit(s)	R/W	default	Description
31	RW	0	earcrx_rterm_cal_rstn
30	RW	0	earcrx_rterm_cal_en
29	RW	0	reserved
28	RW	0	earcrx_rterm_cal_pd
27:24	RW	0	earcrx_rterm_cal_reg
23:16	RW	0	earcrx_reserv
15:12	RW	0	reserved
11	RW	0	earcrx_rxcom_on_sel
10	RW	0	earcrx_idc_sel
9	RW	0	earcrx_cmdcrx_spdif_dat_invsel
8	RW	0	earcrx_dmac_out_invsel
7:4	RW	0	earcrx_cmdcrx_spdif_sqcon
3:0	RW	0	earcrx_dmacrx_sqcon

Table 11-762 EARCRX_ANA_STAT0 0x07

Bit(s)	R/W	default	Description
31	RO	0	earcrx_rterm_cal_done
30:5	RO	0	reserved
4:0	RO	0	earcrx_rterm_cal_code

Table 11-763 EARCRX_PLL_CTRL0 0x08

Bit(s)	R/W	default	Description
31:30	RW	0	reserved
29	RW	0	earcrx_pll_self_reset
28	RW	0	earcrx_pll_en
27:25	RW	0	reserved
24	RW	0	earcrx_pll_digital_rstn_sel
23	RW	0	earcrx_pll_dmacrx_sqout_rstn_sel
22:15	RW	0	reserved
14:10	RW	0	earcrx_pll_n
9:0	RW	0	reserved

Amlogic Proprietary and Confidential
Copyright © Amlogic. All rights reserved.

Table 11-764 EARCRX_PLL_CTRL1 0x09

Bit(s)	R/W	default	Description
31	RW	0	earcrx_pll_afc_bypass
30:29	RW	0	reserved
28:24	RW	0	earcrx_pll_afc_in
23:22	RW	0	reserved
21:20	RW	0	earcrx_pll_adj_ldo
19	RW	0	reserved
18:16	RW	0	earcrx_pll_alpha
15:14	RW	0	reserved
13:12	RW	0	earcrx_pll_bb_mode
11	RW	0	reserved
10:8	RW	0	earcrx_pll_data_sel
7	RW	0	earcrx_pll_dco_clk_sel
6	RW	0	earcrx_pll_dco_m_en
5	RW	0	earcrx_pll_fast_lock
4	RW	0	earcrx_pll_filter_mode
3	RW	0	earcrx_pll_fix_en
2:0	RW	0	reserved

Table 11-765 EARCRX_PLL_CTRL2 0x0a

Bit(s)	R/W	default	Description
31:28	RW	0	earcrx_pll_filter_pvt1
27:24	RW	0	earcrx_pll_filter_pvt2
23	RW	0	reserved
22:20	RW	0	earcrx_pll_lambda0
19	RW	0	reserved
18:16	RW	0	earcrx_pll_lambda1
15:14	RW	0	reserved
13:8	RW	0	earcrx_pll_lk_s
7:4	RW	0	earcrx_pll_lk_w
3:2	RW	0	reserved
1:0	RW	0	earcrx_pll_lkw_sel

Amlogic Proprietary and Confidential
Copyright © Amlogic. All rights reserved.

Table 11-766 EARCRX_PLL_CTRL3 0x0b

Bit(s)	R/W	default	Description
31	RW	0	earcrx_pll_lock_f
30	RW	0	reserved
29:28	RW	0	earcrx_pll_lock_long
27:26	RW	0	reserved
25:24	RW	0	earcrx_pll_pfd_gain
23:22	RW	0	reserved
21:20	RW	0	earcrx_pll_bias_adj
19	RW	0	reserved
18:16	RW	0	earcrx_pll_rou
15	RW	0	earcrx_pll_tdc_mode
14	RW	0	earcrx_pll_acq_range
13	RW	0	earcrx_pll_dco_sdm_en
12:6	RW	0	reserved
5:0	RW	0	earcrx_pll_reve

Table 11-767 EARCRX_PLL_STAT0 0x0c

Bit(s)	R/W	default	Description
31	RO	0	earcrx_pll_dmac_valid
30	RO	0	earcrx_pll_dmac_valid_auto
29	RO	0	earcrx_pll_afc_done_a2d
28:10	RO	0	reserved
9:0	RO	0	earcrx_pll_reg_out

Amlogic Proprietary and Confidential
Copyright © Amlogic. All rights reserved.

12 AFIFO

12.1 Register Description

For below registers the base address is 0xfe046000.

Each register final address = BASE + address * 4.

The following lists describe the mapping between each AIFIFO register and its address.

AIU_AIFIFO_CTRL 0xfe046000

AIU_AIFIFO_STATUS 0xfe046004

AIU_AIFIFO_GBIT 0xfe046008

AIU_AIFIFO_CLB 0xfe04600c

AIU_MEM_AIFIFO_START_PTR 0xfe046010

AIU_MEM_AIFIFO_CURR_PTR 0xfe046014

AIU_MEM_AIFIFO_END_PTR 0xfe046018

AIU_MEM_AIFIFO_BYTES_AVAIL 0xfe04601c

AIU_MEM_AIFIFO_CONTROL 0xfe046020

AIU_MEM_AIFIFO_MAN_WP 0xfe046024

AIU_MEM_AIFIFO_MAN_RP 0xfe046028

AIU_MEM_AIFIFO_LEVEL 0xfe04602c

AIU_MEM_AIFIFO_BUF_CNTL 0xfe046030

AIU_MEM_AIFIFO_BUF_WRAP_COUNT 0xfe046034

AIU_MEM_AIFIFO_MEM_CTL 0xfe04603c

AIFIFO_TIME_STAMP_CNTL 0xfe046040

AIFIFO_TIME_STAMP_SYNC_0 0xfe046044

AIFIFO_TIME_STAMP_SYNC_1 0xfe046048

AIFIFO_TIME_STAMP_0 0xfe04604c

AIFIFO_TIME_STAMP_1 0xfe046050

AIFIFO_TIME_STAMP_2 0xfe046054

AIFIFO_TIME_STAMP_3 0xfe046058

AIFIFO_TIME_STAMP_LENGTH 0xfe04605c

Table 12-1 AIU_AIFIFO_CTRL

Bit(s)	R/W	Default	Description
3	R/W	0	CRC pop aififo enable
2	R/W	0	writing to this bit to 1 causes CRC module reset
1	R/W	0	enable aififo
0	R/W	0	writing to this bit to 1 causes aififo soft reset

Amlogic Proprietary and Confidential
Copyright © Amlogic. All rights reserved.

Table 12-2 AIU_AIFIFO_STATUS

Bit(s)	R/W	Default	Description
13	R	0	aififo request to dcu status
12	R	0	dcu select status
11:5	R	0	aififo word counter number
4:0	R	0	how many bits left in the first pop register

Table 12-3 AIU_AIFIFO_GBIT

Bit(s)	R/W	Default	Description
31	R/W	0	Same fucntion as the AIGBIT of AIFIFO in CDROM module write to this register how many bits wanna pop, and reading this register gets the corresponding bits data

Table 12-4 AIU_AIFIFO_CLB

Bit(s)	R/W	Default	Description
31	R/W	0	Same function as the AICLB of AIFIFO in CDROM module return the leading zeros by reading this registers

Table 12-5 AIU_MEM_AIFIFO_START_PTR

Bit(s)	R/W	Default	Description
31	R/W	0	The AIFIFO start pointer into DDR memory is a 32-bit number The Start pointer will automatically be truncated to land on an 8-byte boundary. That is, bits [2:0] = 0;

Table 12-6 AIU_MEM_AIFIFO_CURR_PTR

Bit(s)	R/W	Default	Description
31	R/W	0	The current pointer points so some location between the START and END pointers. The current pointer is a BYTE pointer. That is, you can point to any BYTE address within the START/END range

Table 12-7 AIU_MEM_AIFIFO_END_PTR

Bit(s)	R/W	Default	Description
31	R/W	0	

Table 12-8 AIU_MEM_AIFIFO_BYTES_AVAIL

Bit(s)	R/W	Default	Description
31	R/W	0	

Amlogic Proprietary and Confidential
Copyright © Amlogic. All rights reserved.

Table 12-9 AIU_MEM_AIFIFO_CONTROL

Bit(s)	R/W	Default	Description
10	R/W	0	use_level Set this bit to 1 to enable filling of the FIFO controlled by the buffer level control. If this bit is 0, then use bit[1] to control the enabling of filling
9	R/W	0	Data Ready. This bit is set when data can be popped
8	R/W	0	fill busy This bit will be high when we're fetching data from the DDR memory To reset this module, set cntl_enable = 0, and then wait for busy = 0. After that you can pulse cntl_init to start over
7	R/W	0	cntl_endian_jic Just in case endian. last minute byte swap of the data out of the FIFO to getbit
5:3	R/W	0	ddr_endian
2	R/W	0	cntl_empty_en Set to 1 to enable reading the DDR memory FIFO and filling the pipeline to get-bit Set cntl_empty_en = cntl_fill_en = 0 when pulsing cntl_init
1	R/W	0	cntl_fill_en Set to 1 to enable reading data from DDR memory
0	R/W	0	cntl_init: After setting the read pointers, sizes, channel masks and read masks, set this bit to 1 and then to 0 NOTE: You don't need to pulse cntl_init if only the start address is being changed

Table 12-10 AIU_MEM_AIFIFO_MAN_WP

Bit(s)	R/W	Default	Description
31	R/W	0	manual write pointer

Table 12-11 AIU_MEM_AIFIFO_MAN_RP

Bit(s)	R/W	Default	Description
31	R/W	0	manual read pointer

Table 12-12 AIU_MEM_AIFIFO_LEVEL

Bit(s)	R/W	Default	Description

Table 12-13 AIU_MEM_AIFIFO_BUF_CNTL

Bit(s)	R/W	Default	Description
1	R/W	0	manual mode Set to 1 for manual write pointer mode
0	R/W	0	Init Set high then low after everything has been initialized

Amlogic Proprietary and Confidential
Copyright © Amlogic. All rights reserved.

Table 12-14 AIU_MEM_AIFIFO_BUF_WRAP_COUNT

Bit(s)	R/W	Default	Description
31	R/W	0	

Table 12-15 AIU_MEM_AIFIFO_MEM_CTL

Bit(s)	R/W	Default	Description
29:24	R/W	0	A_brst_num
21:16	R/W	0	A_id
15:0	R/W	0	level_hold

Table 12-16 AIFIFO_TIME_STAMP_CNTL

Bit(s)	R/W	Default	Description
31:16	R/W	0	drop_bytes
15:14	R	0	drop_status
13:12	R	0	sync_match_position
5:4	R/W	0	TIME_STAMP_NUMBER, 0-32bits, 1-64bits, 2-96bits, 3-128bits
3	R/W	0	stamp_soft_reset
2	R/W	0	TIME_STAMP_length_enable
1	R/W	0	TIME_STAMP_sync64_enable
0	R/W	0	TIME_STAMP_enable

Table 12-17 AIFIFO_TIME_STAMP_SYNC_0

Bit(s)	R/W	Default	Description
31	R/W	0	TIME_STAMP_SYNC_CODE_0

Table 12-18 AIFIFO_TIME_STAMP_SYNC_1

Bit(s)	R/W	Default	Description
31	R/W	0	TIME_STAMP_SYNC_CODE_1

Table 12-19 AIFIFO_TIME_STAMP_0/1/2/3

Bit(s)	R/W	Default	Description
31	R/W	0	

Amlogic Proprietary and Confidential
Copyright © Amlogic. All rights reserved.

Table 12-20 AIFIFO_TIME_STAMP_LENGTH

Bit(s)	R/W	Default	Description
31	R/W	0	

Amlogic Proprietary and Confidential
Copyright © Amlogic. All rights reserved.

13 Memory Interface

13.1 DDR

13.1.1 Overview

DDR subsystem consists of four parts: two DDR memory controllers (DMC) and two DDR PHYs. The main features are:

- Supports up to DDR4-3200, LPDDR4- and LPDDR4/LPDDR4x-4266 with an interleaved 64 bit data bus
- Theoretical memory bandwidth of up to 34.128 GB/s
- Up to 8 GBs of DDR memory space, 16 GBs total address space (34 bit address)
- All DDR data can be optionally obfuscated
- Allows an asymmetric DDR memory configuration with only part of the memory space inter-leaved to reduce cost
- Secure DDR access control based on AXI bus ARUSER/AWUSER bit field
- Quality of Service (QoS) support using AXI bus ARQOS/AWQOS priority bit field
- Each DMC uses a different clock phase to reduce EMI

Figure 13-1 DDR Interface

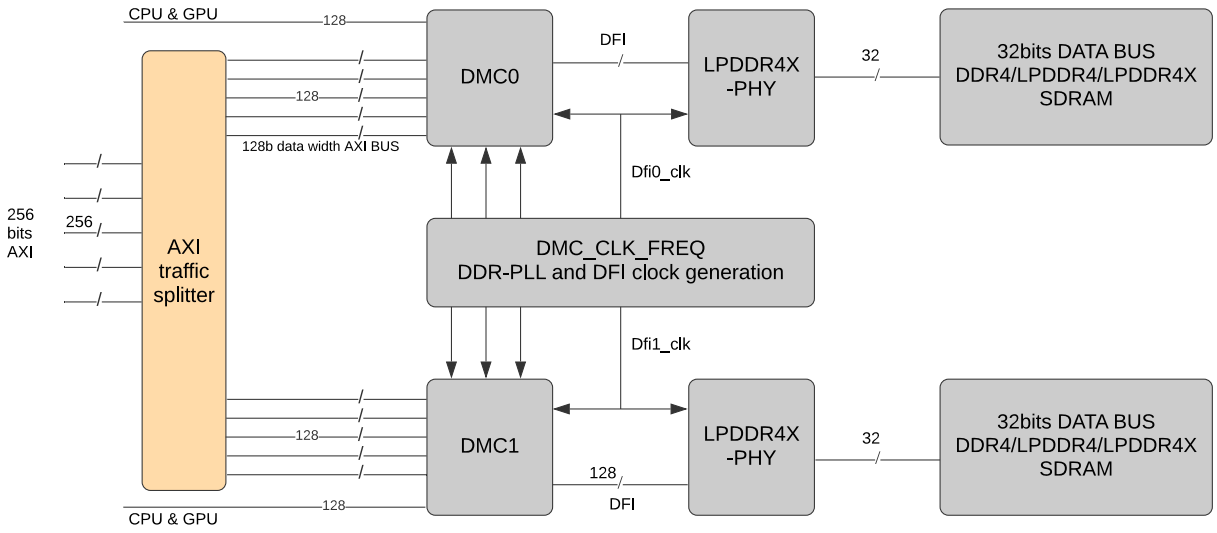

Amlogic Proprietary and Confidential
Copyright © Amlogic. All rights reserved.

Figure 13-2 DMC Architecture

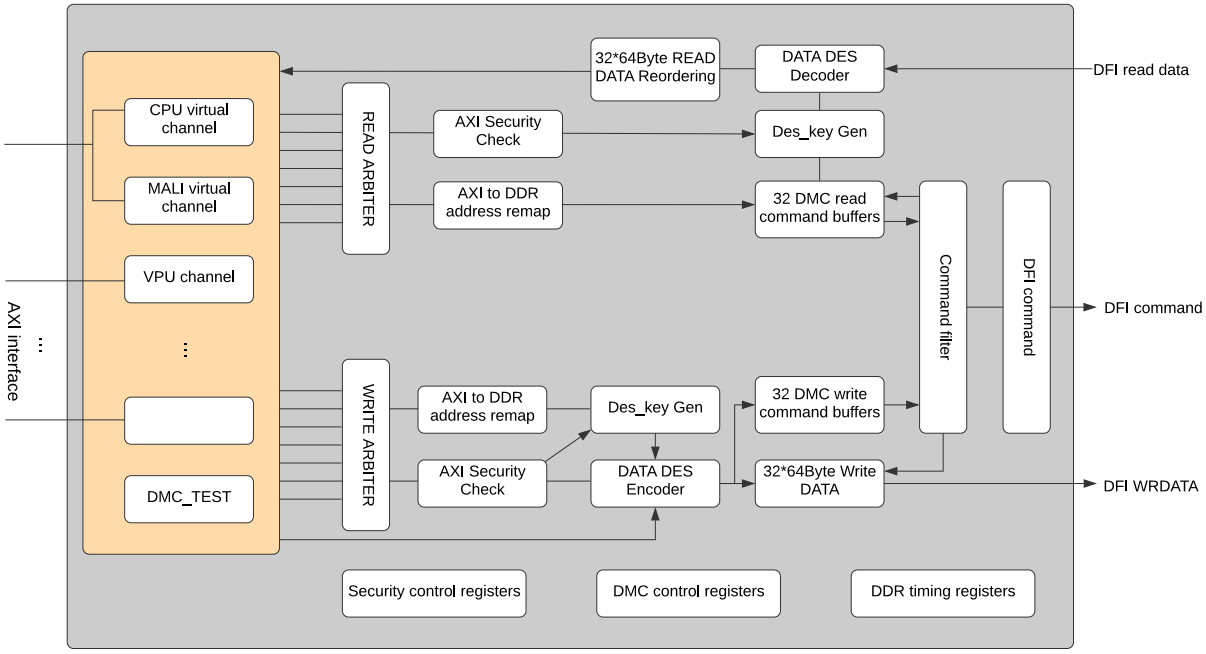

13.1.2 AXI to DDR Address Remapping

16 Gbytes of total AXI address space is remapped into up to 4 Gbytes of DDR address space per DMC controller for a total of up to 8 Gbytes of DDR. Each 512 Mbytes of interleaved DDR memory can be mapped to a different AXI address. The 32 (16 GB/512 MB) remap registers are defined below:

DMC_AXI2DDRx, x = 0x00 to 0x1F

Bit	Register
15:8	Rank_base_addr
7:6	Not used
5	Rank_sel
4	Pure_16b
3	16b_in32
2	Not used
1:0	Map_mode

- **Rank_base_addr:** Remaps 256 Mbytes for each DMC controller for a total of 512 Mbytes if interleaved.
- **RANK_SEL:**
  - 1: this address region is in DDR SDRAM RANK1.
  - 0: this address region is in DDR SDRAM RANK0.
- **Pure_16b:** this region is a DDR 16bits data bus area in a 16bits DDR SDRAM.
- **16b_in32:** this region is a DDR 16bits data bus area in the 32bits DDR DATA bus. (2 DDR SDRAMs with different size).

Amlogic Proprietary and Confidential
Copyright © Amlogic. All rights reserved.

- **Map_mode:**
  - 2'b00, 2'b10: address region is not used by this DMC.
  - 2'b01: address region is mapped to only this DMC in non-interleave mode.
  - 2'b10: region is mapped to both DMC controller using interleaving.

13.1.3 DMC AXI Address Security Region Checking and Data Scrambling

The 16 GB AXI address can be partitioned into 16 security regions inside the DMC. The first 15 regions are defined with start and end addresses with 4KB boundary. The last region is all the remaining address space not defined or enabled in the first 15 regions. Each region has an 8 bit control register and 320 AXI ARUSER/AWUSER master ID-based access control registers to control AXI master access. Each region address space can be overlapped. The security priority is highest for region 0 and decreases all the way down to region 15. For example, if an AXI transaction address exists in security region 0 and region 4, the region 0 security control is used for the transaction.

Figure 13-3 AXI address security checking and data scrambling

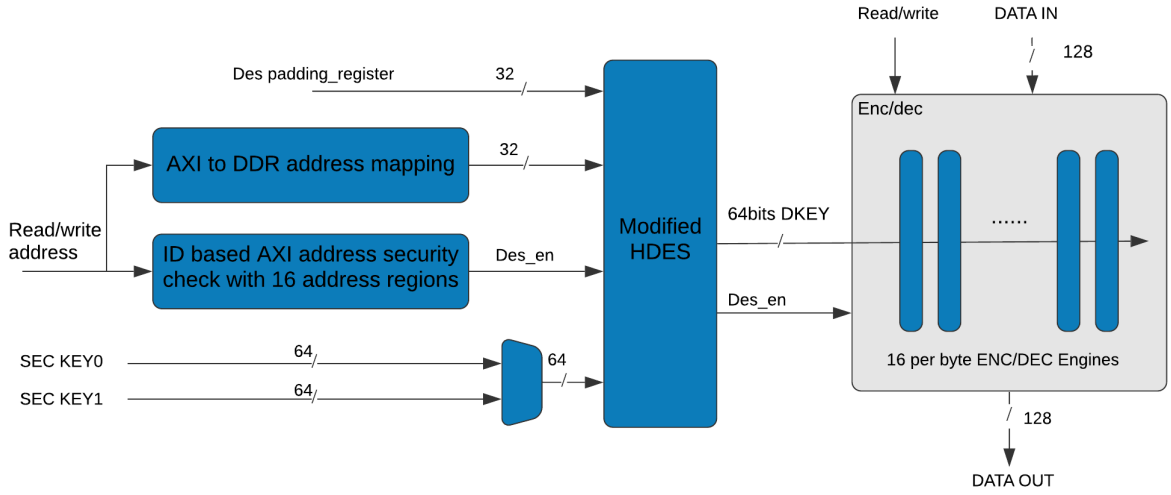

Region_x Control Register

Table 13-1 Register Definition

Bit	Register
7:5	Security_level
4	monitor_en
3	local_des_en
2	Lock
1	Key_sel
0	Enable

- **Security_level:** Region security levels for DMA/DEMUX.
- **monitor_en:** Region monitored by DMC_PROT function. 1= monitored. 0= not monitored.

Amlogic Proprietary and Confidential
Copyright © Amlogic. All rights reserved.

- **Local_des_en:** 1 = Enable DES scrambling for this region. NOTE: The Regionx_des_policy and Global_des_en bits below affects whether scrambling is actually enabled.
- **Lock:**1 = All region related registers are locked and cannot be changed (includes this control register, 10 ID based control registers and address range register)
- **Key_sel:** Selects security key (0 or 1) when scrambling is enabled
- **Enable:** Region enable bit. (NOTE: Region 15 is always enabled and this bit is ignored)

Global DES Control Register

Table 13-2 Register Definition

Bit	Register
31:16	Regionx_des_policy
15:2	Reserved
1	Global_des_en
0	Lock

- **Lock:** 1 = This register and des_padding register are locked and cannot be changed
- **Global_des_en:** 1 = Enable global DES data scrambling
- **Regionx_des_policy:** Each bit decides the scrambling policy for one security region.

  1: Region is DES scrambled if region Local_des_en && Global_des_en.

  0: Region is DES scrambled if region Local_des_en || Global_des_en.

ARUSER/AWUSER Based AXI Bus Security Information

Domain	Master	Bit Assignment							
		bit14	bit13	bit12	bit11	bit10	bit9	bit8	bit7:0 (sys level)
BUS MA-TRIX 0 (10b)	A53						AXI-PROT[2]	AXIPROT [1]	1
	A73						AXI-PROT[2]	AXIPROT [1]	2
	Mali0							PROT-MODE	3
	Mali1							PROT-MODE	4
	BUS MATRIX 0 internal							AXIPROT [1]	5
BUS MA-TRIX 1 (10b)	NNA0								8
	NNA1								9
	NNA2								10
	NNA3								11
BUS MA-TRIX 2	HDMI Rx								16
	usb2 controller								17
	usb3 controller								18

Amlogic Proprietary and Confidential
Copyright © Amlogic. All rights reserved.

Domain	Master	Bit Assignment							
		bit14	bit13	bit12	bit11	bit10	bit9	bit8	bit7:0 (sys level)
	PCIE controller								19
	dev0 p0 -SPICC0								24
	dev0 p1 -SPICC1								25
	dev0 p2 - SDEMMCA								26
	dev0 p3 - SDEMMCB								27
	dev0 p4 - SDEMMCC								28
	dev0 p5 - SPICC2								29
	dev0 p6 - reserved								30
	dev0 p7 - reserved								31
	dev1 p0 - reserved								32
	dev1 p1-reserved								33
	dev1 p2 -ETH								34
	dev1 p3 -AIFIFO								35
	dev1 p4 -AUDMA								36
	dev1 p5 - SPICC3								37
	dev1 p6 - SPICC4								38
	dev1 p7 - SPICC5								39
BUS MA-TRIX 3	GE2D							AxSEC	48
	GDC								49
	dewarp					AxID[1:0]		AxSEC	50
	vdec	AxUSER[6:0]							51
	hevc f	AxUSER[6:0]							52
	hevc b	AxUSER[6:0]							53
	hcodec	AxUSER[6:0]							54
	wave521						AXI-PROT[2]	AXIPROT [1]	55
BUS MA-TRIX 4 (20b)	demux(awuser)					wr_level[2:0]			63
	demux(ruser)					rd_level[2:0]			63
	ISP0								64
	ISP1								65

Amlogic Proprietary and Confidential
Copyright © Amlogic. All rights reserved.

Domain	Master	Bit Assignment							
		bit14	bit13	bit12	bit11	bit10	bit9	bit8	bit7:0 (sys level)
	ISP2								66
	ISP3								67
	DSP A						0	0	68
	DSP B						0	0	69
	AO-CPU						0	!HPROT [0]	70
	jtag						0	0	71
	dev2 p0 - AUDIO				AUDIO_SUBID[3:0]				72
	dev2 p1 - DMA	wr_level[2:0]			DMA_SUBID[3:0]				73
	dev2 p1 - DMA (ruser)				RD-ERR	rd_level[2:0]			73
	dev2 p1 - DMA (buser)							WRERR	73
	dev2 p2 - reserved								74
	dev2 p3 - reserved								75
	dev2 p4 - reserved								76
	dev2 p5 - reserved								77
	dev2 p6 - reserved								78
	dev2 p7 - reserved								79
BUS MA-TRIX 5 (20b)	VPU0			AxID[3:0]				AxSEC	80
	VPU1			AxID[3:0]				AxSEC	81
	VPU2			AxID[3:0]				AxSEC	82

```
//the 128 read/write control bits defines as below.
//bit 11:0. for BUS MATRIX 0  domain.
//bit [11:0] = {Bus Matrix 0_non_sec, Bus Matrix 0_sec, mali_non_prot, mali_prot,
//a73_non_sec_inst, a73_sec_inst, a73_non_sec_data, a73_sec_data,
//a53_non_sec_inst, a53_sec_inst, a53_non_sec_data, a53_sec_data };

//bit 15:12 for BUS MATRIX 1 nna domain.
// 15:12 = {nna3, nna2, nna1, nna0}

//bit 37:16 for BUS MATRIX 2 device0
// 37:16 = { not_used, spicc5, spicc4, spicc3, audma, aififo,
// eth, dev0_p1, dev0_p0, dev0_p7, dev0_p6, spicc2, sdemmcc, sdemmcb,
// sdemmca, spicc1, spicc0, not used, pcie, usb3, usb2, hdmi_rx };

//bit 78:38 for BUS MATRIX 3 ge2d,gdc, hcodec, vdec, hevc, wave521 etc.
//[78:38] Bus Matrix 3_sid_sel = { wave11, wave10, wave01, wave00,
//dewap_nonsec, dewap_sec, gdc, ge2d_nonsec, ge2d_sec,
// hevcf_7, hevcf_6, hevcf_5, hevcf_4, hevcf_3, hevcf_2, hevcf_1, hevcf_0,
//hevcb_7, hevcb_6, hevcb_5, hevcb_4, hevcb_3, hevcb_2, hevcb_1, hevcb_0,
//hcodec_7, hcodec_6, hcodec_5, hcodec_4, hcodec_3, hcodec_2, hcodec_1, hcodec_0,
//vdec_7, vdec_6, vdec_5, vdec_4, vdec_3, vdec_2, vdec_1, vdec_0};
//bit 119:80 for BUS MATRIX 4 device 2 aocpu dsp isp.
```


Amlogic Proprietary and Confidential
Copyright © Amlogic. All rights reserved.

```
// { demux, jtag, dev2_p7, dev2_p6, dev2_p5, dev2_p4, dev2_p3, dev2_p2,
// dma_7, dma_6, dma_5, dma_4, dma_3, dma_2, dma_1, dma_0,
// audio_15, audio_14, audio_13, audio_12, audio_11, audio_10, audio_9, audio_8,
// audio_7, audio_6, audio_5, audio_4, audio_3, audio_2, audio_1, audio_0,
// aocpu_1, aocpu_0, dsp_b, dsp_a, isp3, isp2, isp1, isp0};
//bit 126:120. for Bus Matrix 5 VPU
// { dmc_test, vpu2_nosec, vpu2_sec, vpu1_nosec, vpu1_sec, vpu0_nosec, vpu0_sec}
```

13.1.4 DMC Security Register Bit Assignment

Register Control Bit	Master IDs Security Item	Special Requirement
0	a53_sec_data	
1	a53_non_sec_data	
2	a53_sec_inst	
3	a53_non_sec_inst	
4	a73_sec_data	
5	a73_non_sec_data	
6	a73_sec_inst	
7	a73_non_sec_inst	
8	mali_prot	
9	mali_non_prot	
10	Bus Matrix 0_sec	
11	Bus Matrix 0_non_sec	
12	nna0	
13	nna1	
14	nna2	
15	nna3	
16	hdmi_rx	
17	usb2	
18	usb3	
19	pcie	
20	not used	
21	spicc0	
22	spicc1	
23	sdemmca	
24	sdemmcb	
25	sdemmcc	
26	spicc2	
27	not used	
28	not used	
29	not used	

Amlogic Proprietary and Confidential
Copyright © Amlogic. All rights reserved.

Register Control Bit	Master IDs Security Item	Special Requirement
30	not used	
31	ETHNET	
32	aiffo	
33	audma	
34	spicc3	
35	spicc4	
36	spicc5	
37	not used	
38	vdec_lvl0	
39	vdec_lvl1	
40	vdec_lvl2	
41	vdec_lvl3	
42	vdec_lvl4	
43	vdec_lvl5	
44	vdec_lvl6	
45	vdec_lvl7	
46	hcodec_lvl0	
47	hcodec_lvl1	
48	hcodec_lvl2	
49	hcodec_lvl3	
50	hcodec_lvl4	
51	hcodec_lvl5	
52	hcodec_lvl6	
53	hcodec_lvl7	
54	hevcb_lvl0	
55	hevcb_lvl1	
56	hevcb_lvl2	
57	hevcb_lvl3	
58	hevcb_lvl4	
59	hevcb_lvl5	
60	hevcb_lvl6	
61	hevcb_lvl7	
62	hevcf_lvl0	
63	hevcf_lvl1	
64	hevcf_lvl2	
65	hevcf_lvl3	

Amlogic Proprietary and Confidential
Copyright © Amlogic. All rights reserved.

Register Control Bit	Master IDs Security Item	Special Requirement
66	hevcf_lvl4	
67	hevcf_lvl5	
68	hevcf_lvl6	
69	hevc_f_lv7	
70	ge2d_sec	
71	ge2d_nonsec	
72	gdc	
73	dewap_sec	
74	dewap_nonsec	
75	wave_sid0	
76	wave_sid1	
77	wave_sid2	
78	wave_sid3	
79	not used	
80	isp0	
81	isp1	
82	isp2	
83	isp3	
84	dsp_a	
85	dsp_b	
86	aocpu_0	
87	aocpu_1	
88	audio_sid0	
89	audio_sid1	
90	audio_sid2	
91	audio_sid3	
92	audio_sid4	
93	audio_sid5	
94	audio_sid6	
95	audio_sid7	
96	audio_sid8	
97	audio_sid9	
98	audio_sid10	
99	audio_sid11	
100	audio_sid12	

Amlogic Proprietary and Confidential
Copyright © Amlogic. All rights reserved.

Register Control Bit	Master IDs Security Item	Special Requirement
101	audio_sid13	
102	audio_sid14	
103	audio_sid15	
104	dma_thread0	sec_lvl <= region_lvl for write
105	dma_thread1	sec_lvl <= region_lvl for write
106	dma_thread2	sec_lvl <= region_lvl for write
107	dma_thread3	sec_lvl <= region_lvl for write
108	dma_thread4	sec_lvl <= region_lvl for write
109	dma_thread5	sec_lvl <= region_lvl for write
110	dma_thread6	sec_lvl <= region_lvl for write
111	dma_thread7	sec_lvl <= region_lvl for write
112	dev_port2	
113	dev_port3	
114	dev_port4	
115	dev_port5	
116	dev_prot6	
117	dev_prot7	
118	JTAG	
119	DEMUX	sec_lvl <= region_lvl for write
120	vpu0_sec	
121	vpu0_non-sec	
122	vpu1_sec	
123	vpu1_non_sec	
124	vpu2_sec	
125	vpu2_non_sec	
126	dmc_test	

13.1.5 AXI0 CPU & GPU Virtual Channel

AXI0 channel is from BUS MATRIX 0 for both CPU and GPU. But CPU and GPU have different QOS controls. CPU and GPU traffic are separated into two different virtual channels inside the DMC. The CPU traffic goes directly to AXI port arbiter. The GPU traffic goes through a 16 deep command FIFO before the AXI port arbiter. Inside the DMC, there are different QOS control systems for CPU and GPU channels.

Table 13-3 DMC AXI Port Mapping

AXI0	BUS MATRIX 0	A73, A53, GPU
AXI2	BUS MATRIX 5	3 VPU

Amlogic Proprietary and Confidential
Copyright © Amlogic. All rights reserved.

AXI3	BUS MATRIX 1	4 NNA
AXI4	BUS MATRIX 2	DEVICE0, DEVICE1, USB, PCIe, HDMI Rx
AXI5	DMC_TEST	DMC internal
AXI6	BUS MATRIX 3	DOS, GE2d
AXI7	BUS MATRIX 4	DEVICE2, ISP, DEMUX, DSP

13.1.6 DMC AXI Port QoS Control

DMC uses ARQOS[3:0]/AWQOS[3:0] bit fields as the default QoS control input. Inside each AXI port interface, there are several control registers to give additional QoS control. The QoS value is used for AXI port arbitration to decide which AXI request to put in the DMC command buffer. The QoS value of each AXI transaction is also used for the DDR command filter to balance the DDR performance and DDR request latency. There are standard QoS control features for all AXI ports and additional special QoS control features for the CPU, GPU, VPU and ISP.

1. Fixed QoS: Forces a fixed QoS value for each AXI port instead of the AXI ARQOS/AWQOS bit field input.
2. Transaction Grouping: Each AXI port can be programmed with transaction grouping that controls how many AXI transactions can be granted together when port wins the arbiter. NOTE: Also called arbitration weight
3. Improve Wait Time: If an AXI port cannot win the arbitration because of higher priority QoS AXI requests, the QoS value can be programmed to increase after waiting a certain number of clock cycles.
4. CPU IRQ/FIQ QoS Control: DMC can set the CPU channel QoS value to a fixed value if the CPU is inside an IRQ or FIQ interrupt.
5. CPU Auto QoS Control: DMC can set the CPU channel QoS value to a fixed value if there is a VPU request or other request inside the DMC.
6. VPU/ISP Urgent Control: DMC can set the VPU/ISP channel QoS value to a fixed value if the urgent control signal is set.
7. VPU Sleep: DMC can use this signal to trigger LPDDR4 PHY retraining.
8. AXI port status registers

13.1.7 DMC TEST Module

DMC test modules features:

- Increase test data pattern size to 128bursts (32x128).
- Error counters.
- Meets DRAM validation hooks requirements.
- Address use AXI linear address.
- Must use security control to identify the address space to be used.

13.1.8 Clock, Refresh, Retraining and Frequency Change for 2 DMCs

- dmc_clk_freq generates 2 DMC clocks with the same frequency but phase differs and controlled by different PLL control registers.
- Timer inside dmc_clk_freq to trigger both DMCs for auto refresh/retraining/frequency change at the same time.

Amlogic Proprietary and Confidential
Copyright © Amlogic. All rights reserved.

Figure 13-4 Changes for 2 DMCs

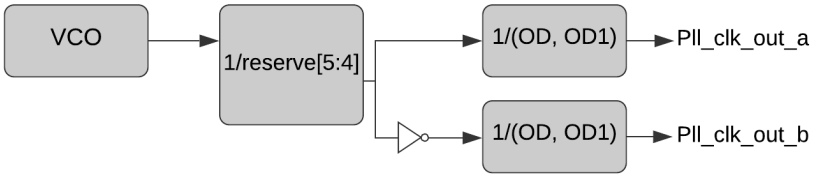

13.1.9 Register Description

The two DMC modules, including the registers, are exactly the same.

Table 13-4 DMC Registers Base Address

Registers Domain	Register Base Address	Range
DMC0	0xfe036000	8KB
DMC1	0xfe034000	8KB
DDRPHY0	0xfc000000	16MB
DDRPHY1	0xfb000000	16MB
DMC_CLK_FREQ	0xfe0a0000	8KB

DMC_CLK_FREQ registers address = Base Address + offset.

Table 13-5 AM_DDR_PLL_CNTL0 0x0000

Bit(s)	R/W	Default	Description
31	Read only	0	dpll_lock. 1: lock. 0: unlock.
30	R/W	0	Not used.
29	R/W	1	dpll_reset.
28	R/W	0	dpll_en.
27:26	R/W	0	dpll_clk_en. 2'b10: pll_clock output enable. 4xclk output disable.. 2'b11, pll_clock and 4xclk output enable.
25	R/W	0	dpll_inv_sel
21:19	R/W	0	od1.
18:16	R/W	0	OD.
14:10	R/W	0	dpll_ref_div_n
8:0	R/W	0	dpll_int_num

Table 13-6 AM_DDR_PLL_CNTL1 0x0001

Bit(s)	R/W	Default	Description
18:0	R/W	0	ddr_dpll_frac

Amlogic Proprietary and Confidential
Copyright © Amlogic. All rights reserved.

Table 13-7 AM_DDR_PLL_CNTL2 0x0002

Bit(s)	R/W	Default	Description
22:20	R/W	0	fref_sel
17:16	R/W	0	os_ssc
15:12	R/W	0	ssc_str_m
8	R/W	0	ssc_en
7:4	R/W	0	ssc_dep_sel
1:0	R/W	0	dpll ss_mode.

Table 13-8 AM_DDR_PLL_CNTL3 0x0003

Bit(s)	R/W	Default	Description
31	R/W	0	afc bypass
30	R/W	0	afc clk sel
29	R/W	0	code new
28	R/W	0	dco_m_en
27	R/W	0	dco_sdm_en
26	R/W	0	div2
25	R/W	0	div mode
24	R/W	0	fast_lock mode
23	R/W	0	fb_pre_div
22	R/W	0	filter_mode
21	R/W	0	fix_en
20	R/W	0	freq_shift_en
19	R/W	0	load
18	R/W	0	load_en
17	R/W	0	lock_f
16	R/W	0	pulse_width_en
15	R/W	0	sdmnc_en
14	R/W	0	sdmnc_mode
13	R/W	0	sdmnc_range
12	R/W	0	tdc_en
11	R/W	0	tdc_mode_sel
10	R/W	0	Ddr_dpll_wait_en
9:0	R/W	0	Not used.

Amlogic Proprietary and Confidential
Copyright © Amlogic. All rights reserved.

Table 13-9 AM_DDR_PLL_CNTL4 0x0004

Bit(s)	R/W	Default	Description
1:0	R/W	0	pfd_gain
7:4	R/W	0	filter_pvt1
11:8	R/W	0	filter pvt2
13:12	R/W	0	acq_gain
18:16	R/W	0	lambda0
22:20	R/W	0	lambda1
26:24	R/W	0	rou
30:28	R/W	0	alpha

Table 13-10 AM_DDR_PLL_CNTL5 0x0005

Bit(s)	R/W	Default	Description
15:0	R/W	0	reve
21:16	R/W	0	lm_s
27:24	R/W	0	lm_w
30:28	R/W	0	adj_vco_ldo

Table 13-11 AM_DDR_PLL_CNTL6 0x0006

Bit(s)	R/W	Default	Description
30:28	R/W	0	adj_vco_ldo
27:24	R/W	0	lm_w
21:16	R/W	0	lm_s
15:6	R/W	0	Reve[15:6]
5:4	R/W	0	reve[5:4] for chan_A, chan_B phase control. if freq =1, it would replaced by AM_DDR_FREQ_CTRL bit[11:10];
3:0	R/W	0	Reve[3:0]

Table 13-12 AM_DDR_PLL_STS 0x0007

Bit(s)	R/W	Default	Description
31	Read only	0	DDR_PLL_LOCK
30	Read only	0	Lock_a
29	Read only	0	DDR_AFC_DONE

Amlogic Proprietary and Confidential
Copyright © Amlogic. All rights reserved.

Bit(s)	R/W	Default	Description
22:16	Read only	0	sdmnc_monitor
9:0	Read only		out_rsv

Table 13-13 DDR_CLK_CNTL 0x0008

Bit(s)	R/W	Default	Description
31	R/W	0	Channel 0 ddr_pll_clk enable. enable the clock from DDR_PLL to clock generation.
30.	R/W	0	Channel 0 ddr_pll_prod_test_en. enable the clock to clock/32 which to clock frequency measurement and production test pin.
29.	R/W	0	Not used
28.	R/W	0	clock generation logic soft reset. 0 = reset.
27.	R/W	0	channel 0 phy_4xclk phase inverter..
25	R/W	0	channel 0 DDRPHY DfiClk/DMC clock selection. 1: AM_PLL clk output /2. 0: directly output from AM_PLL .
24	R/W	0	channel 0 enable AM_PLL CLK output /2 function. 1: enable. 0: disable. if try to use this clkoutput/2 function.
23.	R/W	0	Channel 1 ddr_pll_clk enable. enable the clock from DDR_PLL to clock generation.
22	R/W	0	Channel 1 ddr_pll_prod_test_en. enable the clock to clock/32 which to clock frequency measurement and production test pin.
21:20	R/W	0	Not used.
19	R/W	0	channel 1 phy_4xclk phase inverter.
17	R/W	0	Channel 1 DDRPHY DfiClk/DfiCtlClk/DMC clock selection. 1: AM_PLL clk output /2. 0: directly output from AM_PLL
16	R/W	0	Channel 1 AM_PLL CLK output /2 function. 1: enable. 0: disable. if try to use this clkoutput/2 function.
12	R/W	1	Channel 1 def_clk_sel 1: select reference clock as LPDDR4-PHY clock. 0: normal.
11	R/W	1	Channel 1 default clock enable. enable PCLK as LPDDR4_PHY clock. 0: disable.
10	R/W	0	enable ddr channel 1 dmc_clk.
9	R/W	1	enable LPDDR4-PHY channel 1 DfiClk.
8	R/W	1	enable LPDDR4-PHY channel 1 DfiCtlClk.
4	R/W	1	ddr0 def_clk_sel 1: select reference clock as LPDDR4-PHY clock. 0: normal.
3	R/W	1	ddr0 default clock enable. enable PCLK as LPDDR4_PHY clock. 0: disable.
2.	R/W	0	enable ddr channel 0 dmc_clk.
1.	R/W	1	enable LPDDR4-PHY channel 0 DfiClk.
0.	R/W	1	enable LPDDR4-PHY channel 0 DfiCtlClk.

Amlogic Proprietary and Confidential
Copyright © Amlogic. All rights reserved.

LPDDR4 power on reset need to special combination of PwrOkIn and phy_reset_n. Please check the PHY PUB data book for detail.

Table 13-14 DDR_PHY_CTRL 0x0009

Bit(s)	R/W	Default	Description
31:8	R/W	0	Not used.
7	R/W	0	use dmc_clk_freq to control DDR-PHY channel 1 refresh/retrainning/frequency change/phy power etc.
6	R/W	0	use dmc_clk_freq to control DDR-PHY channel 0 refresh/retrainning/frequency change/phy power etc
5	R/W	0	DDR_PHY 1 PwrOkIn pin.
4	R/W	0	DDR_PHY 0 PwrOkIn pin.
3	R/W	0	DDR_PHY 1 APB soft reset_n.
2	R/W	0	DDR_PHY 1 phy_reset_n.
1.	R/W	0	DDR_PHY 0 APB soft reset_n.
0.	R/W	0	DDR_PHY 0 phy_reset_n.

Table 13-15 AM_DDR_FREQ_CTRL 0x000c

Bit(s)	R/W	Default	Description
31	R/W	0	write trigger the DDR frequency change procedure. read =0 the frequency change done.
30	R/W	0	current FREQ selection. it can forced to change to select which frequency to select, or it can auto changed by FREQ change hardware.
29	R/W	0	next freq for frequency change.
12	R/W	0	ddr_dpll_inv_sel in frequency1 for 4xclk inverter.
11:10	R/W	0	ddr_dpll_clk_en in frequency1 for 4xclk and clock output.
9:8	R/W	0	pll_reve[5:4] in frequency1.
6:4	R/W	0	OD1 number in frequency 1.
2:0	R/W	0	OD number in frequency 1.

Frequency 0 auto refresh timing.

Table 13-16 AM_DDR_TIMING_F0 0x000d

Bit(s)	R/W	Default	Description
15:8	R/W	0	refresh period in 100ns.
7:0	R/W	0	T100ns. how many clock cycle for 100ns.

Frequency 1 auto refresh timing.

Amlogic Proprietary and Confidential
Copyright © Amlogic. All rights reserved.

Table 13-17 AM_DDR_TIMING_F1 0x000e

Bit(s)	R/W	Default	Description
15:8	R/W	0	refresh period in 100ns.
7:0	R/W	0	T100ns. how many clock cycle for 100ns.

Table 13-18 AM_DDR_TIMING_CFG 0x000f

Bit(s)	R/W	Default	Description
31	R/W	0	cfg ddr timing. write 1 to save the timing parameters to ddr clock domain.
30	R/W	0	dmc_clk_freq control the LPDDR4 retraining.
39	R/W	0	dmc_clk_freq control the auto refresh timing.
28:24	R/W	0	Not used.
23:0	R/W	0	lpddr4 phy retraining timer counter in 100ns.

Register address= dmc0/1_register_base_addr + (offset << 2).

Table 13-19 DMC_REQ_CTRL 0x0000

Bit(s)	R/W	Default	Description
31:8	R/W	0	Not used.
7.	R/W	0	Enable axi port 7
6.	R/W	0	Enable axi port 6
5.	R/W	0	Not used.
4.	R/W	0	Enable axi port 4.
3.	R/W	0	Enable axi port 3
2.	R/W	0	enable axi port 2
1.	R/W	0	Not used.
0.	R/W	0	Enable axi port0.

Table 13-20 DMC_SOFT_RST 0x0001

Bit(s)	R/W	Default	Description
31~ 8	R/W	0	reserved for future.
7:0.	R/W	0	Reset_n for AXI ports dmc clock domain interface. One bit for one AXI port . 0: reset. 1: normal working mode.

Table 13-21 DMC_SOFT_RST1 0x0002

Bit(s)	R/W	Default	Description
31~ 1	R/W	0	not used.
0.	R/W	0	AXI0 master clock domain reset_n signal. 0: reset. 1: normal working mode.

Amlogic Proprietary and Confidential
Copyright © Amlogic. All rights reserved.

Table 13-22 DMC_SOFT_RST2 0x0003

Bit(s)	R/W	Default	Description
31~ 11.	R/W	0	reserved for future.
10	R/W	0	DMC DFI cmd soft reset_n. 0: reset. 1: normal working mode.
9	R/W	0	DMC DFI MISC soft reset_n. 0: reset. 1: normal working mode.
8	R/W	0	DMC DFI data soft reset_n. 0: reset. 1: normal working mode.
7	R/W	0	DMC DFI dcu soft reset_n. 0: reset. 1: normal working mode.
6	R/W	0	DMC siu soft reset_n. 0: reset. 1: normal working mode.
5.	R/W	0	DMC test soft reset_n.0: reset. 1: normal working mode.
4.	R/W	0	DMC low power control moudle soft reset_n. 0: reset. 1: normal working mode.
3.	R/W	0	DMC QoS monitor module soft reset_n.0: reset. 1: normal working mode.
2.	R/W	0	DMC register modle soft reset_n. 0: reset. 1: normal working mode.
1.	R/W	0	Not used.
0.	R/W	0	DMC command buffers and command generation modules soft reset_n.0 = reset. 1: normal working mode.

Table 13-23 DMC_RST_STS1 0x0004

Bit(s)	R/W	Default	Description
31~1.	Read only	0	not used.
0.	Read only	0	RO. the DMC_SOFT_RST1 signal in n_clk domain. the purpose of this register is when one of the 2 clocks is too slow or too fast, we can read this regis- ter to make sure another clock domain reset is done.

Table 13-24 DMC_CLKG_CTRL0 0x0006

Bit(s)	R/W	Default	Description
31:8	R/W	0xffffff	Not used.
7:0	R/W	0xff	enable the 8 axi interfaces both main and n_clk auto clock gating function. each 1 bit for one interface.

Table 13-25 DMC_CLKG_CTRL1 0x0007

Bit(s)	R/W	Default	Description
31:8	R/W	0	Not used.
7:0	R/W	0	force to disable the 8 axi interfaces both main and n_clk. each 1 bit for one interface.

Amlogic Proprietary and Confidential
Copyright © Amlogic. All rights reserved.

Table 13-26 DMC_CLKG_CTRL2 0x0008

Bit(s)	R/W	Default	Description
12	R/W	1	enable auto clock gating for awcmdfifo.
11	R/W	1	enable auto clock gating for arcmdfifo.
10	R/W	1	enable auto clock gating for dfi command generation
9	R/W	1	enable auto clock gating for dram controller
8	R/W	1	enable auto clock gating for dfi data path.
7.	R/W	1	enable auto clock gating for write rsp generation.
6.	R/W	1	enable auto clock gating for read rsp generation.
5.	R/W	1	enable auto clock gating for ddr0 command filter.
4.	R/W	1	enable auto clock gating for ddr0 write reorder buffer.
3.	R/W	1	enable auto clock gating for ddr0 write data buffer.
2.	R/W	1	enable auto clock gating for ddr0 read reorder buffer.
1.	R/W		Not used
0.	R/W		Not used.

Table 13-27 DMC_CLKG_CTRL3 0x0009

Bit(s)	R/W	Default	Description
12	R/W	0	force to disable the clock of awcmdfifo.
11	R/W	0	force to disable the clock of arcmdfifo.
10	R/W	0	force to disable the clock of dfi command generation
9	R/W	0	force to disable the clock of dram controller
8	R/W	0	force to disable the clock of dfi data path.
7.	R/W	0	force to disable the clock of write rsp generation.
6.	R/W	0	force to disable the clock of read rsp generation.
5.	R/W	0	force to disable the clock of command filter.
4.	R/W	0	force to disable the clock of write reorder buffer.
3.	R/W	0	force to disable the clock of write data buffer.
2.	R/W	0	force to disable the clock of read reorder buffer.
1.	R/W	0	Not used.
0.	R/W	0	Not used.

Table 13-28 DMC_MON_CTRL0 0x0010

Bit(s)	R/W	Default	Description
31.	R/W	0	QoS_mon_en. write 1 to trigger the enable. polling this bit 0, means finished.or use interrupt to check finish.
30.	R/W	0	QoS_mon interrupt clear. clear the QoS monitor result.read 1 = QoS mon finish interrupt.

Amlogic Proprietary and Confidential
Copyright © Amlogic. All rights reserved.

Table 13-29 DMC_MON_TIMER 0x0011

Bit(s)	R/W	Default	Description
31:0	R/W	0	timer for the monitor period.

Table 13-30 DMC_MON_ALL_IDLE_CNT 0x0012

Bit(s)	R/W	Default	Description
31:0	Read only	0	at the test period, the whole MMC all channel IDLE time. unit, dmc clock.

Table 13-31 DMC_MON_ALL_BW 0x0013

Bit(s)	R/W	Default	Description
31:0	Read only	0	at the test period, the whole MMC granted data cycles. units one data clock cycle = 16bytes.

Table 13-32 DMC_MON_ALL_BW 0x0014

Bit(s)	R/W	Default	Description
31:0	Read only	0	at the test period, the whole MMC granted data cycles which goes to 16bits ddr. units one data clock cycle = 16byte.

Table 13-33 DMC_MON0_STA 0x0020

Bit(s)	R/W	Default	Description
31:20	R/W	0	Not used
19:0.	R/W	0	Mon0 start address unit 4KB.

Table 13-34 DMC_MON0_EDA 0x0021

Bit(s)	R/W	Default	Description
31:20	R/W	0	Not used
19:0.	R/W	0	Mon0 end address unit 4KB.

Table 13-35 DMC_MON0_CTRL 0x0022

Bit(s)	R/W	Default	Description
31.	R/W	0	bandwidth monitor 0 enable.
30.	R/W	0	check write bandwidth 1: check. 0 not check.
29	R/W	0	check read bandwidth 1: check. 0: not check.
28:27	R/W	0	not used.
26	R/W	0	Id_num 2 enable.
25	R/W	0	Id_num 1 enable.

Amlogic Proprietary and Confidential
Copyright © Amlogic. All rights reserved.

Bit(s)	R/W	Default	Description
24	R/W	0	Id_num 0 enable.
23:16	R/W	0	master ID number 2.
15:8	R/W	0	master ID number 1.
7:0	R/W	0	master ID number 0.

Table 13-36 DMC_MON0_ BW 0x0023

Bit(s)	R/W	Default	Description
31:0	Read only	0	Monitor0 bandwidth report. read only. unit: 1 clock cycle data transfer = 16byte.

Table 13-37 DMC_MON1_STA 0x0024

Bit(s)	R/W	Default	Description
31:20	R/W	0	Not used
19:0.	R/W	0	Mon0 start address unit 4KB.

Table 13-38 DMC_MON1_EDA 0x0025

Bit(s)	R/W	Default	Description
31:20	R/W	0	Not used
19:0.	R/W	0	Mon1 end address unit 4KB.

Table 13-39 DMC_MON1_CTRL 0x0026

Bit(s)	R/W	Default	Description
31.	R/W	0	bandwidth monitor 1 enable.
30.	R/W	0	check write bandwidth 1: check. 0 not check.
29	R/W	0	check read bandwidth 1: check. 0: not check.
28:27	R/W	0	not used.
26	R/W	0	Id_num 2 enable.
25	R/W	0	Id_num 1 enable.
24	R/W	0	Id_num 0 enable.
23:16	R/W	0	master ID number 2.
15:8	R/W	0	master ID number 1.
7:0	Read only	0	master ID number 0.

Amlogic Proprietary and Confidential
Copyright © Amlogic. All rights reserved.

Table 13-40 DMC_MON1_ BW 0x0027

Bit(s)	R/W	Default	Description
31:0	RO		Monitor1 bandwidth report. read only. unit: 1 clock cycle data transfer = 16byte.

Table 13-41 DMC_MON2_STA 0x0028

Bit(s)	R/W	Default	Description
31:20	R/W	0	Not used
19:0.	R/W	0	Mon2 start address unit 4KB.

Table 13-42 DMC_MON2_EDA 0x0029

Bit(s)	R/W	Default	Description
31:20	R/W	0	Not used
19:0.	R/W	0	Mon2 end address unit 4KB.

Table 13-43 DMC_MON2_CTRL 0x002a

Bit(s)	R/W	Default	Description
31.	R/W	0	bandwidth monitor 2 enable.
30.	R/W	0	check write bandwidth 1: check. 0 not check.
29	R/W	0	check read bandwidth 1: check. 0: not check.
28:27	R/W	0	not used.
26	R/W	0	Id_num 2 enable.
25	R/W	0	Id_num 1 enable.
24	R/W	0	Id_num 0 enable.
23:16	R/W	0	master ID number 2.
15:8	R/W	0	master ID number 1.
7:0	R/W	0	master ID number 0.

Table 13-44 DMC_MON2_ BW 0x002b

Bit(s)	R/W	Default	Description
31:0	Read only	0	Monitor 2 bandwidth report. read only. unit: 1 clock cycle data transfer = 16byte.

Table 13-45 DMC_MON3_STA 0x002c

Bit(s)	R/W	Default	Description
31:20	R/W	0	Not used
19:0.	R/W	0	Mon3 start address unit 4KB.

Amlogic Proprietary and Confidential
Copyright © Amlogic. All rights reserved.

Table 13-46 DMC_MON3_EDA 0x002d

Bit(s)	R/W	Default	Description
31:20	R/W	0	Not used
19:0.	R/W	0	Mon3 end address unit 4KB.

Table 13-47 DMC_MON3_CTRL 0x002e

Bit(s)	R/W	Default	Description
31.	R/W	0	bandwidth monitor 3 enable.
30.	R/W	0	check write bandwidth 1: check. 0 not check.
29	R/W	0	check read bandwidth 1: check. 0: not check.
28:27	R/W	0	not used.
26	R/W	0	Id_num 2 enable.
25	R/W	0	Id_num 1 enable.
24	R/W	0	Id_num 0 enable.
23:16	R/W	0	master ID number 2.
15:8	R/W	0	master ID number 1.
7:0	R/W	0	master ID number 0.

Table 13-48 DMC_MON3_ BW 0x002f

Bit(s)	R/W	Default	Description
31:0	Read only	0	Monitor 3 bandwidth report. read only. unit: 1 clock cycle data transfer = 16byte.

Table 13-49 DMC_MON4_STA 0x0030

Bit(s)	R/W	Default	Description
31:20	R/W	0	Not used
19:0.	R/W	0	Mon4 start address unit 4KB.

Table 13-50 DMC_MON4_EDA 0x0031

Bit(s)	R/W	Default	Description
31:20	R/W	0	Not used
19:0.	R/W	0	Mon4 end address unit 4KB.

Table 13-51 DMC_MON4_CTRL 0x0032

Bit(s)	R/W	Default	Description
31.	R/W	0	bandwidth monitor 4 enable.
30.	R/W	0	check write bandwidth 1: check. 0 not check.
29	R/W	0	check read bandwidth 1: check. 0: not check.

Amlogic Proprietary and Confidential
Copyright © Amlogic. All rights reserved.

Bit(s)	R/W	Default	Description
28:27	R/W	0	not used.
26	R/W	0	Id_num 2 enable.
25	R/W	0	Id_num 1 enable.
24	R/W	0	Id_num 0 enable.
23:16	R/W	0	master ID number 2.
15:8	R/W	0	master ID number 1.
7:0	R/W	0	master ID number 0.

Table 13-52 DMC_MON4_ BW 0x0033

Bit(s)	R/W	Default	Description
31:0	Read only	0	Monitor 4 bandwidth report. read only. unit: 1 clock cycle data transfer = 16byte.

Table 13-53 DMC_MON5_STA 0x0034

Bit(s)	R/W	Default	Description
31:20	R/W	0	Not used
19:0.	R/W	0	Mon5 start address unit 4KB.

Table 13-54 DMC_MON5_EDA 0x0035

Bit(s)	R/W	Default	Description
31:20	R/W	0	Not used
19:0.	R/W	0	Mon5 end address unit 4KB.

Table 13-55 DMC_MON5_CTRL 0x0036

Bit(s)	R/W	Default	Description
31.	R/W	0	bandwidth monitor 5 enable.
30.	R/W	0	check write bandwidth 1: check. 0 not check.
29	R/W	0	check read bandwidth 1: check. 0: not check.
28:27	R/W	0	not used.
26	R/W	0	Id_num 2 enable.
25	R/W	0	Id_num 1 enable.
24	R/W	0	Id_num 0 enable.
23:16	R/W	0	master ID number 2.
15:8	R/W	0	master ID number 1.
7:0	R/W	0	master ID number 0.

Amlogic Proprietary and Confidential
Copyright © Amlogic. All rights reserved.

Table 13-56 DMC_MON5_ BW 0x0037

Bit(s)	R/W	Default	Description
31:0	Read only	0	Monitor 5 bandwidth report. read only. unit: 1 clock cycle data transfer = 16byte.

Table 13-57 DMC_MON6_STA 0x0038

Bit(s)	R/W	Default	Description
31:20	R/W	0	Not used
19:0.	R/W	0	Mon6 start address unit 4KB.

Table 13-58 DMC_MON6_EDA 0x0039

Bit(s)	R/W	Default	Description
31:20	R/W	0	Not used
19:0.	R/W	0	Mon6 end address unit 4KB.

Table 13-59 DMC_MON6_CTRL 0x003a

Bit(s)	R/W	Default	Description
31.	R/W	0	bandwidth monitor 6 enable.
30.	R/W	0	check write bandwidth 1: check. 0 not check.
29	R/W	0	check read bandwidth 1: check. 0: not check.
28:27	R/W	0	not used.
26	R/W	0	Id_num 2 enable.
25	R/W	0	Id_num 1 enable.
24	R/W	0	Id_num 0 enable.
23:16	R/W	0	master ID number 2.
15:8	R/W	0	master ID number 1.
7:0	R/W	0	master ID number 0.

Table 13-60 DMC_MON6_ BW 0x003b

Bit(s)	R/W	Default	Description
31:0	Read only	0	Monitor 6 bandwidth report. read only. unit: 1 clock cycle data transfer = 16byte.

Table 13-61 DMC_MON7_STA 0x003c

Bit(s)	R/W	Default	Description
31:20	R/W	0	Not used
19:0.	R/W	0	Mon7 start address unit 4KB.

Amlogic Proprietary and Confidential
Copyright © Amlogic. All rights reserved.

Table 13-62 DMC_MON7_EDA 0x003d

Bit(s)	R/W	Default	Description
31:20	R/W	0	Not used
19:0.	R/W	0	Mon7 end address unit 4KB.

Table 13-63 DMC_MON7_CTRL 0x003e

Bit(s)	R/W	Default	Description
31.	R/W	0	bandwidth monitor 7 enable.
30.	R/W	0	check write bandwidth 1: check. 0 not check.
29	R/W	0	check read bandwidth 1: check. 0: not check.
28:27	R/W	0	not used.
26	R/W	0	Id_num 2 enable.
25	R/W	0	Id_num 1 enable.
24	R/W	0	Id_num 0 enable.
23:16	R/W	0	master ID number 2.
15:8	R/W	0	master ID number 1.
7:0	R/W	0	master ID number 0.

Table 13-64 DMC_MON7_ BW 0x003f

Bit(s)	R/W	Default	Description
31:0	Read only	0	Monitor 6 bandwidth report. read only. unit: 1 clock cycle data transfer = 16byte.

Table 13-65 DMC_CMD_FILTER_CTRL0 0x0040

Bit(s)	R/W	Default	Description
31:0	R/W	0	Not used.

Table 13-66 DMC_CMD_FILTER_CTRL2 0x0041

Bit(s)	R/W	Default	Description
31:24.	R/W	0x50	keep the bank active if there's urgent level 3 read bank hit request.
23:16.	R/W	0x40	keep the bank active if there's urgent level 2 read bank hit request.
15:8.	R/W	0x30	keep the bank active if there's urgent level 1 read bank hit request.
7:0.	R/W	0x20	keep the bank active if there's urgent level 0 read bank hit request.

Amlogic Proprietary and Confidential
Copyright © Amlogic. All rights reserved.

Table 13-67 DMC_CMD_FILTER_CTRL3 0x0042

Bit(s)	R/W	Default	Description
31.	R/W	0	force wbuf empty.
30:26	R/W	28	wbuf high level number
25:21	R/W	16	wbuf midlevel number
20:16	R/W	12	wbuf low level number
14:10	R/W	20	rbuf high level number
9:5	R/W	12	rbuf middle level number
4:0	R/W	6	rbuf low level number

Table 13-68 DMC_CMD_FILTER_CTRL4 0x0043

Bit(s)	R/W	Default	Description
29:25	R/W	8	tITW.long
24:20	R/W	4	tITW. short
19:12	R/W	30	tAP auto precharge the bank not used if idle that long time.
11:6	R/W	0x20	write to read accesses if there write hit request.
5:0	R/W	0x20	read to write accesses if there write hit request.

Table 13-69 DMC_CMD_FILTER_CTRL5 0x0044

Bit(s)	R/W	Default	Description
31:24	R/W	0x3f	Once ddr data bus switch to read, the maximum read command number to give up the bus when there's write request pending for write buffer.
23:16	R/W	0x3f	Once ddr data bus switch to write, the maximum write command number to give up the bus when there's read request pending too long.
15:8	R/W	0x18	Once ddr data bus switch to read, the minimum read command number to transfer back to write stage if there's still pending read request.
7:0	R/W	0x18	Once ddr data bus switch to write, the minimum write command number to transfer back to read stage if there's still pending write request.

Table 13-70 DMC_CMD_FILTER_CTRL6 0x0045

Bit(s)	R/W	Default	Description
31:24	R/W	8	write urgent 3 request pending hold num.
23:16	R/W	8	write urgent 2 request pending hold num.
15:8	R/W	8	write urgent 1 request pending hold num.
7:0	R/W	8	write urgent 0 request pending hold num.

Amlogic Proprietary and Confidential
Copyright © Amlogic. All rights reserved.

Table 13-71 DMC_CMD_FILTER_CTRL7 0x0046

Bit(s)	R/W	Default	Description
31:24	R/W	0x10	aw_req_pedning signal assertion after wbuf full.
23:16	R/W	0x10	aw_req_pending signal hold how long if wbuf not full.
15:8	R/W	0x40	write to read waiting cycles if there write hit request.
7:0	R/W	0x40	read to write waiting cycles if there write hit request.

Table 13-72 DMC_CMD_BUFFER_CTRL8 0x0047

Bit(s)	R/W	Default	Description
31:8	R/W	0	Reserved
7:0	R/W	0x20	rank limit to change to another rank.

Table 13-73 DMC_CMD_BUFFER_CTRL 0x0048

Bit(s)	R/W	Default	Description
31:26	R/W	32	total write buffer number. default 32.
25:20	R/W	32	total read buffer number. default 32.
19:8	R/W	0	reserved.
7:0	R/W	0x30	aw_pending_inc_num. increase write urgent level 1 when write com- mand waiting to in write buffer that long.

Table 13-74 DMC_CMD_BUFFER_CTRL1 0x0049

Bit(s)	R/W	Default	Description
29:24	R/W	28	read buffer number in non-urgent request.
23:16	R/W	16	read buffer bank miss watch dog threshold.
15:12	R/W	12	read buffer urgent level 3 counter inc weight.
11:8	R/W	20	read buffer urgent level 2 counter inc weight.
7:4	R/W	12	read buffer urgent level 1 counter inc weight.
3:0	R/W	6	read buffer urgent level 0 counter inc weight.

Table 13-75 DMC_2ARB_CTRL 0x004c

Bit(s)	R/W	Default	Description
32:24.	R/W	0x80	Waiting limit to use the highest urgent level in the pipelines.
23:0	R/W	0	Not used.

Amlogic Proprietary and Confidential
Copyright © Amlogic. All rights reserved.

Table 13-76 DMC_VERSION 0x004f

Bit(s)	R/W	Default	Description
32:0	Read only	0x0100-0009	0x01000009

This AXI0 channel CTRL register is for CPU virtual channel QoS.

Table 13-77 DMC_AXI0_CHAN_CTRL 0x0080

Bit(s)	R/W	Default	Description
31:30	R/W	0	Not used.
29:20	R/W	0x3f	write request pending cycle number to increment QoS level if not granted
19:16	R/W	0	Fixed QoS value
13:4	R/W	0x3f	read request pending cycle number to increment QoS level if not granted.
3:0	R/W	4	arbiter weight

This AXI0 hold ctrl is for AXI0(BUS MATRIX 0) interface outstanding traffic control.

Table 13-78 DMC_AXI0_HOLD_CTRL 0x0081

Bit(s)	R/W	Default	Description
31:24	R/W	0x28	write hold num. max outstanding request number.
23:16	R/W	0x20	write hold release num. if the outstanding request == hold num, then hold this request unless the outstanding request number below the hold release number, then continue to request.
15:8	R/W	0x28	read hold num. max outstanding request number.
7:0	R/W	0x20	read hold release num. if the outstanding request == hold num, then hold this request unless the outstanding request number below the hold release number, then continue to request.

This AXI0 channel CTRL register is for CPU virtual channel QoS.

Table 13-79 DMC_AXI0_CHAN_CTRL1 0x0082

Bit(s)	R/W	Default	Description
31:28	R/W	0xc	QoS value for FIQ QoS control enabled.
27:24	R/W	0xa	QoS value for IRQ QoS control enabled
23:20	R/W	0x4	AWQoS value for auto QoS control enable with VPU request.
19:16	R/W	0x6	AWQoS value for auto QoS control enable with other request.
15:12	R/W	0x7	AWQoS value for auto QoS control enable without any other request
11:8	R/W	0x4	ARQoS value for auto QoS control enable with VPU request.
7:4	R/W	0x6	ARQoS value for auto QoS control enable with other request.
3:0	R/W	0x7	ARQoS value for auto QoS control enable without any other request

This AXI0 channel CTRL register is for CPU virtual channel QoS.

Amlogic Proprietary and Confidential
Copyright © Amlogic. All rights reserved.

Table 13-80 DMC_AXI0_CHAN_CTRL2 0x0083

Bit(s)	R/W	Default	Description
31:9	R/W	0	Not used.
8	R/W	1	Not used.
7:4	R/W	4	Not used.
3	R/W	1	CPU FIQ QoS control enable.
2	R/W	1	CPU IRQ QoS control enable.
1	R/W	1	CPU read channel auto QoS enable (based on other traffic).
0	R/W	1	CPU write channel auto QoS enable(based on other traffic).

This AXI1 is for GPU virtual channel.

Table 13-81 DMC_AXI1_CHAN_CTRL 0x0084

Bit(s)	R/W	Default	Description
31:30	R/W		Not used.
29:20	R/W	0x7f	write request pending cycle number to increment QoS level if not granted
19:16	R/W	0	Fixed QoS value
13:4	R/W	0x7f	read request pending cycle number to increment QoS level if not granted.
3:0	R/W	4	arbiter weight

This AXI1 is for GPU virtual channel.

Table 13-82 DMC_AXI1_HOLD_CTRL 0x0085

Bit(s)	R/W	Default	Description
31:24	R/W	0x18	write hold num. max outstanding request number.
23:16	R/W	0x10	write hold release num. if the outstanding request == hold num, then hold this request unless the outstanding request number below the hold release number, then continue to request.
15:8	R/W	0x18	read hold num. max outstanding request number.
7:0	R/W	0x10	read hold release num. if the outstanding request == hold num, then hold this request unless the outstanding request number below the hold release number, then continue to request.

Table 13-83 DMC_AXI1_CHAN_CTRL2 0x0087

Bit(s)	R/W	Default	Description
31:9	R/W	0	Not used.
8	R/W	1	Enable asymmetric QoS value if the transaction address is in the range of single/ non-interleaved DMC transaction (asymmetric memory).
7:4	R/W	0	Fixed asymmetric QoS value if the transaction address is in the range of single/ non-interleaved DMC transaction (asymmetric memory)
3:0	R/W	0	Not used.

Amlogic Proprietary and Confidential
Copyright © Amlogic. All rights reserved.

This AXI2 channel CTRL register is for VPU channel

Table 13-84 DMC_AXI2_CHAN_CTRL 0x0088

Bit(s)	R/W	Default	Description
31:30	R/W	0	Not used.
29:20	R/W	0x3f	write request pending cycle number to increment QoS level if not granted
19:16	R/W	0	Fixed QoS value
13:4	R/W	0x3f	read request pending cycle number to increment QoS level if not granted.
3:0	R/W	0x8	arbiter weight

This AXI2 channel CTRL register is for VPU channel.

Table 13-85 DMC_AXI2_HOLD_CTRL 0x0089

Bit(s)	R/W	Default	Description
31:24	R/W	0x28	write hold num. max outstanding request number.
23:16	R/W	0x20	write hold release num. if the outstanding request == hold num, then hold this request unless the outstanding request number below the hold release number, then continue to request.
15:8	R/W	0x28	read hold num. max outstanding request number.
7:0	R/W	0x20	read hold release num. if the outstanding request == hold num, then hold this request unless the outstanding request number below the hold release number, then continue to request.

This AXI2 channel CTRL register is for VPU channel.

Table 13-86 DMC_AXI2_CHAN_CTRL1 0x008a

Bit(s)	R/W	Default	Description
31:20	R/W		Not used
19	R/W	1	Enable sideband write urgent signal to force fixed AWQOS. 1: enable. 0: disable.
18	R/W	1	Enable sideband read urgent signal to force fixed ARQOS. 1: enable. 0: disable.
17	R/W	0	Enable sideband write urgent signal to block other masters 1: enable 0: disable.
16	R/W	0	Enable sideband read urgent signal to block other masters 1: enable 0: disable.
15:12	R/W	0xf	Fixed AWQOS value when sideband write urgent signal = 1 and bit 19 enabled.
11:8	R/W	0xf	Fixed ARQOS value when sideband read urgent signal = 1 and bit 18 enabled.
7:0	R/W	0	AXI masters to block when sideband read/write urgent signal = 1 and bit 16/17 enabled NOTE: Do not block ISP, VPU, CPU or other urgent request.

This AXI3 channel CTRL register is for NNA channel

Amlogic Proprietary and Confidential
Copyright © Amlogic. All rights reserved.

Table 13-87 DMC_AXI3_CHAN_CTRL 0x008c

Bit(s)	R/W	Default	Description
31:30	R/W		Not used.
29:20	R/W	0x7f	write request pending cycle number to increment QoS level if not granted
19:16	R/W	0	Fixed QoS value
13:4	R/W	0x7f	read request pending cycle number to increment QoS level if not granted.
3:0	R/W	4	arbiter weight

This AXI3 channel CTRL register is for NNA channel.

Table 13-88 DMC_AXI3_HOLD_CTRL 0x008d

Bit(s)	R/W	Default	Description
31:24	R/W	0x18	write hold num. max outstanding request number.
23:16	R/W	0x10	write hold release num. if the outstanding request == hold num, then hold this request unless the outstanding request number below the hold release number, then continue to request.
15:8	R/W	0x18	read hold num. max outstanding request number.
7:0	R/W	0x10	read hold release num. if the outstanding request == hold num, then hold this request unless the outstanding request number below the hold release number, then continue to request.

This AXI4 channel CTRL register is for device channel

Table 13-89 DMC_AXI4_CHAN_CTRL 0x0090

Bit(s)	R/W	Default	Description
31:30	R/W	0	Not used.
29:20	R/W	0x7f	write request pending cycle number to increment QoS level if not granted
19:16	R/W	0	Fixed QoS value
13:4	R/W	0x7f	read request pending cycle number to increment QoS level if not granted.
3:0	R/W	4	arbiter weight

This AXI4 channel CTRL register is for device channel.

Table 13-90 DMC_AXI4_HOLD_CTRL 0x0091

Bit(s)	R/W	Default	Description
31:24	R/W	0x18	write hold num. max outstanding request number.
23:16	R/W	0x10	write hold release num. if the outstanding request == hold num, then hold this request unless the outstanding request number below the hold release number, then continue to request.
15:8	R/W	0x18	read hold num. max outstanding request number.
7:0	R/W	0x10	read hold release num. if the outstanding request == hold num, then hold this request unless the outstanding request number below the hold release number, then continue to request.

Amlogic Proprietary and Confidential
Copyright © Amlogic. All rights reserved.

This AXI5 channel CTRL register is for dmc test channel

Table 13-91 DMC_AXI5_CHAN_CTRL 0x0094

Bit(s)	R/W	Default	Description
31:20	R/W	0xff	Not used.
19:16	R/W	0	ARQoS/AWQoS for internal dmc_test.
13:4	R/W	0xff	Not used.
3:0	R/W	4	arbiter weight

This AXI5 channel CTRL register is for dmc test channel.

Table 13-92 DMC_AXI5_HOLD_CTRL 0x0095

Bit(s)	R/W	Default	Description
31:24	R/W	7	write hold num. max outstanding request number.
23:16	R/W	4	write hold release num. if the outstanding request == hold num, then hold this request unless the outstanding request number below the hold release number, then continue to request.
15:8	R/W	7	read hold num. max outstanding request number.
7:0	R/W	4	read hold release num. if the outstanding request == hold num, then hold this request unless the outstanding request number below the hold release number, then continue to request.

This AXI6 channel CTRL register is for device channel

Table 13-93 DMC_AXI6_CHAN_CTRL 0x0098

Bit(s)	R/W	Default	Description
31:30	R/W	0	Not used.
29:20	R/W	0x7f	write request pending cycle number to increment QoS level if not granted
19:16	R/W	0	Fixed QoS value
13:4	R/W	0x7f	read request pending cycle number to increment QoS level if not granted.
3:0	R/W	4	arbiter weight

This AXI6 channel CTRL register is for device channel.

Table 13-94 DMC_AXI6_HOLD_CTRL 0x0099

Bit(s)	R/W	Default	Description
31:24	R/W	0x18	write hold num. max outstanding request number.
23:16	R/W	0x10	write hold release num. if the outstanding request == hold num, then hold this request unless the outstanding request number below the hold release number, then continue to request.

Amlogic Proprietary and Confidential
Copyright © Amlogic. All rights reserved.

Bit(s)	R/W	Default	Description
15:8	R/W	0x18	read hold num. max outstanding request number.
7:0	R/W	0x10	read hold release num. if the outstanding request == hold num, then hold this request unless the outstanding request number below the hold release number, then continue to request.

This AXI7 channel CTRL register is for ISP/demux/other device channel

Table 13-95 DMC_AXI7_CHAN_CTRL 0x009c

Bit(s)	R/W	Default	Description
31:30	R/W	0	Not used.
29:20	R/W	0x7f	write request pending cycle number to increment QoS level if not granted
19:16	R/W	0	Fixed QoS value
13:4	R/W	0x7f	read request pending cycle number to increment QoS level if not granted.
3:0	R/W	0	arbiter weight

This AXI7 channel CTRL register is for ISP/demux/other device channel.

Table 13-96 DMC_AXI7_HOLD_CTRL 0x009d

Bit(s)	R/W	Default	Description
31:24	R/W	0x1f	write hold num. max outstanding request number.
23:16	R/W	0x10	write hold release num. if the outstanding request == hold num, then hold this request unless the outstanding request number below the hold release number, then continue to request.
15:8	R/W	0x18	read hold num. max outstanding request number.
7:0	R/W	0x10	read hold release num. if the outstanding request == hold num, then hold this request unless the outstanding request number below the hold release number, then continue to request.

This AXI7 channel CTRL register is for ISP/demux/other device channel.

Table 13-97 DMC_AXI7_CHAN_CTRL1 0x009e

Bit(s)	R/W	Default	Description
31:20	R/W		Not used
19	R/W	1	Enable sideband write urgent signal to control AWQOS. 1: enable. 0: disable.
18	R/W	1	Enable sideband read urgent signal to control ARQOS. 1: enable. 0: disable.
17	R/W	0	Enable sideband write urgent signal to block other master request. 1: enable. 0 disable.
16	R/W	0	Enable sideband read urgent signal to block other master request. 1: enable. 0 disable.
15:12	R/W	0xf	AWQOS value when sideband write urgent signal = 1 and bit 19 enabled..

Amlogic Proprietary and Confidential
Copyright © Amlogic. All rights reserved.

Bit(s)	R/W	Default	Description
11:8	R/W	0xf	ARQOS value when sideband read urgent signal = 1 and bit 18 enabled.
7:0	R/W	0	AXI masters to block when sideband read/write urgent signal = 1 and bit 16/17 enabled NOTE: Do not block ISP, VPU, CPU or other urgent request.

AXI0 Async interface status.

Table 13-98 DMC_AXI0_CHAN_STS 0x00a0

Bit(s)	R/W	Default	Description
31:24	Read only	0	read command pending transaction number.
23:16	Read only	0	write command pending transaction number.
15:12	Read only	0	FIQ STS
11:8	Read only	0	IRQ STS
7:0	Read only	0	read back data waiting counter(RVALID high with RREADY low max time counter.

Mali virtual channel status.

Table 13-99 DMC_AXI1_CHAN_STS 0x00a1

Bit(s)	R/W	Default	Description
31:24	Read only	0	read command pending transaction number.
23:16	Read only	0	write command pending transaction number.
15:8	Read only	0	write data fifo counter.
7:0	Read only	0	Mali master side wddata valid for AWVALID counter..

Table 13-100 DMC_AXI2_CHAN_STS 0x00a2

Bit(s)	R/W	Default	Description
31:24	Read only	0	read command pending transaction number.
23:16	Read only	0	write command pending transaction number.
15:8	Read only	0	AWVALID without WDATA transaction number.
7:0	Read only	0	read back data waiting counter(RVALID high with RREADY low max time counter)

Amlogic Proprietary and Confidential
Copyright © Amlogic. All rights reserved.

Table 13-101 DMC_AXI3_CHAN_STS 0x00a3

Bit(s)	R/W	Default	Description
31:24	Read only	0	read command pending transaction number.
23:16	Read only	0	write command pending transaction number.
15:8	Read only	0	AWVALID without WDATA transaction number.
7:0	Read only	0	read back data waiting counter (RVALID high with RREADY low max time counter)

Table 13-102 DMC_AXI4_CHAN_STS 0x00a4

Bit(s)	R/W	Default	Description
31:24	Read only	0	read command pending transaction number.
23:16	Read only	0	write command pending transaction number.
15:8	Read only	0	AWVALID without WDATA transaction number.
7:0	Read only	0	read back data waiting counter (RVALID high with RREADY low max time counter)

Table 13-103 DMC_AXI5_CHAN_STS 0x00a5

Bit(s)	R/W	Default	Description
31:24	Read only	0	read command pending transaction number.
23:16	Read only	0	write command pending transaction number.
15:8	Read only	0	AWVALID without WDATA transaction number.
7:0	Read only	0	Not used

Table 13-104 DMC_AXI6_CHAN_STS 0x00a6

Bit(s)	R/W	Default	Description
31:24	Read only	0	read command pending transaction number.
23:16	Read only	0	write command pending transaction number.
15:8	Read only	0	AWVALID without WDATA transaction number.
7:0	Read only	0	read back data waiting counter (RVALID high with RREADY low max time counter)

Amlogic Proprietary and Confidential
Copyright © Amlogic. All rights reserved.

Table 13-105 DMC_AXI7_CHAN_STS 0x00a7

Bit(s)	R/W	Default	Description
31:24	Read only	0	read command pending transaction number.
23:16	Read only	0	write command pending transaction number.
15:8	Read only	0	AWVALID without WDATA transaction number.
7:0	Read only	0	read back data waiting counter (RVALID high with RREADY low max time counter)

CPU virtual channel outstanding traffic control.

Table 13-106 DMC_CPU_HOLD_CTRL 0x00a8

Bit(s)	R/W	Default	Description
31:24	R/W	0x20	write hold num. max outstanding request number.
23:16	R/W	0x18	write hold release num. if the outstanding request == hold num, then hold this request unless the outstanding request number below the hold release number, then continue to request.
15:8	R/W	0x20	read hold num. max outstanding request number.
7:0	R/W	0x18	read hold release num. if the outstanding request == hold num, then hold this request unless the outstanding request number below the hold release number, then continue to request.

Table 13-107 DMC_CHAN_STS 0x00bc

Bit(s)	R/W	Default	Description
27	Read only	1	always 1
26	Read only	1	write data buffer idle. 1: idle 0: busy.
25	Read only	1	always 1.
24	Read only	1	Write command buffer idle. 1: idle 0: busy.
23:10	Read only	0x3fff	Not used.
9	Read only	1	Mali virtual channel idle. 1: idle 0: busy.
8	Read only	1	CPU Virtual channel idle. 1: idle 0: busy.
7:0.	Read only	0xff	Axi interface channel idle. 1: idle 0: busy.

Amlogic Proprietary and Confidential
Copyright © Amlogic. All rights reserved.

Table 13-108 DMC_IRQ _STS 0x00db

Bit(s)	R/W	Default	Description
31:1	R	0	Not used.
0	R/W	0	QoS Monitor interrupt flag. 1: means there's QoS monitor interrupt. write 1 to clean this interrupt.

Table 13-109 DMC_PROT0_STA 0x00e0

Bit(s)	R/W	Default	Description
31:20	R	0	Not used.
19:0	R/W	0	protection 0 start address . unit 4KB.

Table 13-110 DMC_PROT0_EDA 0x00e1

Bit(s)	R/W	Default	Description
31:20	R/W	0	Not used.
19:0	R/W	0	protection 0 end address . unit 4KB.

Table 13-111 DMC_PROT0_CTRL 0x00e2

Bit(s)	R/W	Default	Description
31:28	R/W	0	Not used.
27	R/W	0	protection 0 write monitor enable.
26	R/W	0	protection 0 read monitor enable.
25:9	R/W	0	Not used.
8	R/W	0	montior policy: 1 include the defined IDs. 0: exclude the defined IDs.
7:4	R/W	0	Not used.
3	R/W	0	ID3 enable.
2	R/W	0	ID2 enable.
1	R/W	0	ID1 enable.
0	R/W	0	ID0 enable.

Table 13-112 DMC_PROT0_CTRL1 0x00e3

Bit(s)	R/W	Default	Description
31:24	R/W	0	ID3 id number.
23:16	R/W	0	ID2 id number.
15:8	R/W	0	ID1 id number.
7:0	R/W	0	ID0 id number.

Amlogic Proprietary and Confidential
Copyright © Amlogic. All rights reserved.

Table 13-113 DMC_PROT1_STA 0x00e4

Bit(s)	R/W	Default	Description
31:20	R	0	Not used.
19:0	R/W	0	protection 1 start address . unit 4KB.

Table 13-114 DMC_PROT1_EDA 0x00e5

Bit(s)	R/W	Default	Description
31:20	R/W	0	Not used.
19:0	R/W	0	protection 1 end address . unit 4KB.

Table 13-115 DMC_PROT1_CTRL 0x00e6

Bit(s)	R/W	Default	Description
31:28	R/W	0	Not used.
27	R/W	0	protection 1 write monitor enable.
26	R/W	0	protection 1 read monitor enable.
25:9	R/W	0	Not used.
8	R/W	0	monitor policy: 1 include the defined IDs. 0: exclude the defined IDs.
7:4	R/W	0	Not used.
3	R/W	0	ID3 enable.
2	R/W	0	ID2 enable.
1	R/W	0	ID1 enable.
0	R/W	0	ID0 enable.

Table 13-116 DMC_PROT1_CTRL1 0x00e7

Bit(s)	R/W	Default	Description
31:24	R/W	0	ID3 id number.
23:16	R/W	0	ID2 id number.
15:8	R/W	0	ID1 id number.
7:0	R/W	0	ID0 id number.

Table 13-117 DMC_PROT_VIO_0 0x00e8

Bit(s)	R/W	Default	Description
31:0	Read only	0	protection write violation low 32bits address. AWADDR[31:0].

Amlogic Proprietary and Confidential
Copyright © Amlogic. All rights reserved.

Table 13-118 DMC_PROT_VIO_1 0x00e9

Bit(s)	R/W	Default	Description
31:19	R/W	0	Not used.
18	R/W	0	protection 1 violation.
17	R/W	0	protection 0 violation.
16:15	R/W	0	AWADDR[33:32].
14:0	R/W	0	AWUSER for this violated transaction.

Table 13-119 DMC_PROT_VIO_2 0x00ea

Bit(s)	R/W	Default	Description
31:0	Read only	0	protection read violation low 32bits address. ARADDR[31:0].

Table 13-120 DMC_PROT_VIO_3 0x00eb

Bit(s)	R/W	Default	Description
31:19	Read only	0	Not used.
18	Read only	0	protection 1 violation.
17	Read only	0	protection 0 violation.
16:15	Read only	0	ARADDR[33:32].
14:0	Read only	0	ARUSER for this violated transaction.

Table 13-121 DMC_PROT_IRQ_CTRL_STS 0x00ec

Bit(s)	R/W	Default	Description
31:3	Read only	0	Not used.
2	R/W	0	protection IRQ enable
1	R/W	0	write protection violation. write 1 to clean the write protection status and interrupt.
0	R/W	0	read protection violation. write 1 to clean the read protection status and interrupt.

DMC DDR Timing Parameter Registers

There're 2 sets of timing DDR timing parameters for 2 sets of DDR frequency parameters.

When change frequency, the hardware would automatically select one of these two sets of timing parameters: DMC_DRAM_* is for Frequency set 0. DMC_NFQ_* is for Frequency set 1.

Amlogic Proprietary and Confidential
Copyright © Amlogic. All rights reserved.

Table 13-122 DMC_DRAM_TMRD 0x0100

Bit(s)	R/W	Default	Description
4:0	R/W	0	tMRD. //MR command cycles, in DDR3/4.in LPDDR4, it should be value of tMRW

Table 13-123 DMC_DRAM_TRFC 0x0101

Bit(s)	R/W	Default	Description
9:0	R/W	0	tRFC

Table 13-124 DMC_DRAM_TRP 0x0102

Bit(s)	R/W	Default	Description
21:16	R/W	0	tRP for precharge all banks.
5:0	R/W	0	tRP for precharge one bank.

Table 13-125 DMC_DRAM_TRTW 0x0103

Bit(s)	R/W	Default	Description
5:0	R/W	0	DDR3/4 mode: tRTW. For LPDDR4 . The total read command -> write command = (RL + BL/2 - tWOD-TON) + TDQSCK_MAX + tWPRE +RD(tRPST). tRTW = TDQSCK_max + tWPRE + tRD(tRPST) + (delay margin)

Table 13-126 DMC_DRAM_TCL 0x0104

Bit(s)	R/W	Default	Description
5:0	R/W	0	tCL/tRL. read latency.

Table 13-127 DMC_DRAM_TCWL 0x0105

Bit(s)	R/W	Default	Description
5:0	R/W	0	CWL write latency.

Table 13-128 DMC_DRAM_TRAS 0x0106

Bit(s)	R/W	Default	Description
7:0	R/W	0	tRAS.minimum active to precharge time for same bank.

Table 13-129 DMC_DRAM_TRC 0x0107

Bit(s)	R/W	Default	Description
7:0	R/W	0	tRC.minimum active to active time for same bank.

Amlogic Proprietary and Confidential
Copyright © Amlogic. All rights reserved.

Table 13-130 DMC_DRAM_TRCD 0x0108

Bit(s)	R/W	Default	Description
7:0	R/W	0	tRCDactive to read/write timing for same bank.

Table 13-131 DMC_DRAM_TRRD 0x0109

Bit(s)	R/W	Default	Description
21:16	R/W	0	tRRD_lactive bank A to active B in same band group for DDR4.
5:0	R/W	0	tRRD/tRRD_sactive bank A to active bank b time. tRRD_s: active bank A to active bank b in different bank groups for DDR4.

Table 13-132 DMC_DRAM_TFAW 0x010a

Bit(s)	R/W	Default	Description
8:0	R/W	0	tFAW.four active command windows

Table 13-133 DMC_DRAM_TRTP 0x010b

Bit(s)	R/W	Default	Description
5:0	R/W	0	tRTP.

Table 13-134 DMC_DRAM_TWR 0x010c

Bit(s)	R/W	Default	Description
5:0			tWR.

Table 13-135 DMC_DRAM_TWTR 0x010d

Bit(s)	R/W	Default	Description
21:16	R/W	0	tWTR_l For DDR4 WTR_l. FOR DDR3/LPDDR4 same as tWTR_s.
5:0	R/W	0	tWTR.

Table 13-136 DMC_DRAM_TCCD 0x010e

Bit(s)	R/W	Default	Description
19:16	R/W	0	tCCD/tCCD_l.
3:0	R/W	0	tCCD/tCCD_s read to read command time or write to write command time.

Table 13-137 DMC_DRAM_TEXSR 0x010f

Bit(s)	R/W	Default	Description
12:0	R/W	0	tEXSR.EXIT SELF-REFRESH to read/write command.

Amlogic Proprietary and Confidential
Copyright © Amlogic. All rights reserved.

Table 13-138 DMC_DRAM_TXS 0x0110

Bit(s)	R/W	Default	Description
9:0	R/W	0	tXS.EXIT SELF_REFRESH to other command time

Table 13-139 DMC_DRAM_TXP 0x0111

Bit(s)	R/W	Default	Description
3:0	R/W	0	tXP.EXIT power down to other command time

Table 13-140 DMC_DRAM_TXPDLL 0x0112

Bit(s)	R/W	Default	Description
12:0	R/W	0	tXPDLL,EXIT power down to read/write command time(need to relock PLL).

Table 13-141 DMC_DRAM_TZQCS 0x0113

Bit(s)	R/W	Default	Description
11:0	R/W	0	ZQCS command to other command time.

Table 13-142 DMC_DRAM_TCKSRE 0x0114

Bit(s)	R/W	Default	Description
4:0	R/W	0	enter self refresh to disable clock time.

Table 13-143 DMC_DRAM_TCKSRX 0x0115

Bit(s)	R/W	Default	Description
4:0	R/W	0	enable clock to exit self refresh time.

Table 13-144 DMC_DRAM_TCKE 0x0116

Bit(s)	R/W	Default	Description
4:0	R/W	0	CKE high or low minimum time.

Table 13-145 DMC_DRAM_TMOD 0x0117

Bit(s)	R/W	Default	Description
4:0	R/W	0	tMOD.MRR/MRW to other command time. in LPDDR4, still use this register but it called tMRD.

Amlogic Proprietary and Confidential
Copyright © Amlogic. All rights reserved.

Table 13-146 DMC_DRAM_TDQS 0x0018

Bit(s)	R/W	Default	Description
31:28	R/W	0	reserved
27:24	R/W	0	tDQS. the delay for write after read in different rank.
23:20	R/W	0	reserved
19:16	R/W	0	tDQS. the delay for read after write in different rank.
15:12	R/W	0	reserved
11:8	R/W	0	tDQS. the delay for write after write in different rank.
7:4	R/W	0	reserved
3:0	R/W	0	tDQS. the delay for read after read in different rank.

Table 13-147 DMC_DRAM_TZQLAT 0x011a

Bit(s)	R/W	Default	Description
5:0	R/W	0	ZQ LATCH command to other command timing in LPDDR4 mode.

Table 13-148 DMC_DRAM_TMRR 0x011b

Bit(s)	R/W	Default	Description
7:0	R/W	0	tMRR not used in DMC.

Table 13-149 DMC_DRAM_TCKESR 0x011c

Bit(s)	R/W	Default	Description
9:0	R/W	0	tCKESR.CKE low minimum pulse in self refresh mode.

Table 13-150 DMC_DRAM_DFITCTRLDELAY 0x011e

Bit(s)	R/W	Default	Description
3:0	R/W	0	DFI_t_ctrldealy

Table 13-151 DMC_DRAM_DFITPHYWRDATA 0x011f

Bit(s)	R/W	Default	Description
5:0	R/W	0	dfi_t_phy_wrdata.

Table 13-152 DMC_DRAM_DFITPHYWRLAT 0x0120

Bit(s)	R/W	Default	Description
5:0	R/W	0	dfi_t_phy_wrlat. in DDR3/4/LPDDR3 mode: WL -5. in LPDDR4 mode: WL -5 + 2.

Amlogic Proprietary and Confidential
Copyright © Amlogic. All rights reserved.

Table 13-153 DMC_DRAM_DFITRDDATAEN 0x0121

Bit(s)	R/W	Default	Description
5:0	R/W	0	dfi_t_rddata_en. in DDR3/4/LPDDR3 mode: RL -5. in LPDDR4 mode: RL -5 + 1.

Table 13-154 DMC_DRAM_DFITPHYRDLAT 0x0122

Bit(s)	R/W	Default	Description
5:0	R/W	0	dfi_t_rdlat.

Table 13-155 DMC_DRAM_DFITCTRLUPDMIN 0x0123

Bit(s)	R/W	Default	Description
7:0	R/W	0	CTRLUPD_MIN minimux clock cycle to maintain CTRLUPD_REQ.

Table 13-156 DMC_DRAM_DFITCTRLUPDMAX 0x0124

Bit(s)	R/W	Default	Description
7:0	R/W	0	CTRLUPD_MAX.maximum clock cycle to maintain CTRLUPD_REQ if no CTRLUPD_ACK response.

Table 13-157 DMC_DRAM_DFITDRAMCLK 0x0128

Bit(s)	R/W	Default	Description
17	R/W	0	dram clk1 enable.
16	R/W	0	dram clk0 enable.
15:8	R/W	0	DRAM CLK disable waiting time
7:0	R/W	0	DRAM CLK enable timer

Table 13-158 DMC_DRAM_DFITLPRESP 0x012a

Bit(s)	R/W	Default	Description
3:0	R/W	0	dfi_lp_ctrl_req response time. after dfi_lp_ctrl_req asserted, and after response time if there's still no dfi_lp_ack respone, then drop the dfi_lp_ctrl_req.

Table 13-159 DMC_DRAM_TCKECK 0x012c

Bit(s)	R/W	Default	Description
4:0	R/W	0	tCKECKfrom CKE low to assert dfi_dram_clk_disable time. this time + dfi_t_ctrl_delay

Amlogic Proprietary and Confidential
Copyright © Amlogic. All rights reserved.

Table 13-160 DMC_DRAM_TREFI 0x012d

Bit(s)	R/W	Default	Description
31:24	R/W	0	tZQCI dmc send zqci period. unit is how much auto refresh period.
23:16	R/W	0	pvtidmc send dfi_ctrlupd_req period.unit is one auto refresh period.
15:8	R/W	0	tREFI.dmc send auto refresh command period. unit is 100ns.
7:0	R/W	0	t100ns period. unit is dmc clock cycles

Table 13-161 DMC_DRAM_TSR 0x012e

Bit(s)	R/W	Default	Description
5:0	R/W	0	tSR.self refresh enter to exit time.

Table 13-162 DMC_DRAM_TCCDMW 0x012f

Bit(s)	R/W	Default	Description
5:0	R/W	0	4*tCCD in LPDDR4 mask write.

Table 13-163 DMC_DRAM_TESCKE 0x0130

Bit(s)	R/W	Default	Description
5:0	R/W	0	tESCKE.enter self refresh to power time for LPDDR4.

Table 13-164 DMC_DRAM_TREFI_DDR3 0x0131

Bit(s)	R/W	Default	Description
7:0.	R/W	0	DDR3 SDRAM tREFI single auto refresh time . the unit is t100ns.

Table 13-165 DMC_DRAM_TZQCAL 0x0132

Bit(s)	R/W	Default	Description
11:0.	R/W	0	ZQCAL for LPDDR4. ZQINIT/ZQoper for DDR3/4 ZQCL command.

Table 13-166 DMC_DRAM_T10US 0x0133

Bit(s)	R/W	Default	Description
11:0.	R/W	0	10us clock cycle number used for LP2 mode.

Table 13-167 DMC_DRAM_TMRRI 0x0134

Bit(s)	R/W	Default	Description
7:0	R/W	0	tMRRI for MRR

Amlogic Proprietary and Confidential
Copyright © Amlogic. All rights reserved.

Table 13-168 DMC_DRAM_TXS_FAST 0x0135

Bit(s)	R/W	Default	Description
9:0	R/W	0	DDR4 mode XS_FAST exit self_refrest to zqcl/zqcs/mrs command.

Table 13-169 DMC_DRAM_DFIODTCFG 0x0136

Bit(s)	R/W	Default	Description
12.	R/W	0	rank1 ODT default. default value for ODT[1] pins if there's no read/write activity.
11.	R/W	0	rank1 ODT write sel.enable ODT[1] if there's write occur in rank1.
10.	R/W	0	rank1 ODT write nsel. enable ODT[1] if there's write occur in rank0.
9.	R/W	0	rank1 odt read sel.enable ODT[1] if there's read occur in rank1.
8.	R/W	0	rank1 odt read nsel.enable ODT[1] if there's read occur in rank0.
4.	R/W	0	rank0 ODT default. default value for ODT[0] pins if there's no read/write activity.
3.	R/W	0	rank0 ODT write sel. enable ODT[0] if there's write occur in rank0.
2.	R/W	0	rank0 ODT write nsel. enable ODT[0] if there's write occur in rank1.
1.	R/W	0	rank0 odt read sel. enable ODT[0] if there's read occur in rank0.
0.	R/W	0	rank0 odt read nsel. enable ODT[0] if there's read occur in rank1.

Table 13-170 DMC_DRAM_DFIODTCFG1 0x0137

Bit(s)	R/W	Default	Description
27:24	R/W	0	ODT length for BL8 read transfer.
19:16	R/W	0	ODT length for BL8 write transfer.
12:8	R/W	0	ODT latency for reads. suppose to be 0.
4:0	R/W	0	ODT latency for writes. suppose to be 0.

Table 13-171 DMC_DRAM_TWODTON 0x0138

Bit(s)	R/W	Default	Description
5:0	R/W	0	DRAM write access ODT on time.

Table 13-172 DMC_DRAM_TRETRAIN 0x0139

Bit(s)	R/W	Default	Description
15:0	R/W	0	LPDDR4 OSCRING retraining timer(units = auto_refresh timer). sync with auto refresh

Table 13-173 DMC_DRAM_PHYADDRON 0x013a

Bit(s)	R/W	Default	Description
5:0	R/W	0	PHY_CTRL_ADDR_ON for new PHY. default: 12 unit: DfiClk

Amlogic Proprietary and Confidential
Copyright © Amlogic. All rights reserved.

Table 13-174 DMC_DRAM_PHYWRON 0x013b

Bit(s)	R/W	Default	Description
6:0	R/W	0	PHY_CTRL_WR_ON. = 20 + WL + (tDQSS+ tDQS2DQ + tWPST)/ddr_clk + BL/2

Table 13-175 DMC_DRAM_PHYRDON 0x013c

Bit(s)	R/W	Default	Description
6:0	R/W	0	PHY_CTRL_RD_ON. = 20 + RL + (tDQSCK+ tRPST + tDQSQ)/ddr_clk + BL/2

Table 13-176 DMC_DRAM_ZQCTRL 0x013d

Bit(s)	R/W	Default	Description
31:24.	R/W	0	in LPDDR4 case when to send ZQLAT command to both RANKs of LPDDR4 SDRAM
23:16.	R/W	0	when to send PHY ZQ UPDATE command.
15:8.	R/W	0	when to send ZQCS/ZQCAL to rank1 DDR SDRAM.
7:0.	R/W	0	when to send ZQCS/ZQCAL to rank0 DDR SDRAM.

DMC_NFQ_TMRD 0x0140

DMC_NFQ_TRFC 0x0141

DMC_NFQ_TRP 0x0142

DMC_NFQ_TRTW 0x0143

DMC_NFQ_TCL 0x0144

DMC_NFQ_TCWL 0x0145

DMC_NFQ_TRAS 0x0146

DMC_NFQ_TRC 0x0147

DMC_NFQ_TRCD 0x0148

DMC_NFQ_TRRD 0x0149

DMC_NFQ_TFAW 0x014a

DMC_NFQ_TRTP 0x014b

DMC_NFQ_TWR 0x014c

DMC_NFQ_TWTR 0x014d

DMC_NFQ_TCCD 0x014e

DMC_NFQ_TEXSR 0x014f

DMC_NFQ_TXS 0x0150

DMC_NFQ_TXP 0x0151

DMC_NFQ_TXPDLL 0x0152

DMC_NFQ_TZQCS 0x0153

Amlogic Proprietary and Confidential
Copyright © Amlogic. All rights reserved.

DMC_NFQ_TCKSRE 0x0154
DMC_NFQ_TCKSRX 0x0155
DMC_NFQ_TCKE 0x0156
DMC_NFQ_TMOD 0x0157
DMC_NFQ_TDQS 0x0158
DMC_NFQ_TRSTL 0x0159
DMC_NFQ_TZQLAT 0x015a
DMC_NFQ_TMRR 0x015b
DMC_NFQ_TCKESR 0x015c
DMC_NFQ_TDPD 0x015d
DMC_NFQ_DFITCTRLDELAY 0x015e
DMC_NFQ_DFITPHYWRDATA 0x015f
DMC_NFQ_DFITPHYWRLAT 0x0160
DMC_NFQ_DFITRDDATAEN 0x0161
DMC_NFQ_DFITPHYRDLAT 0x0162
DMC_NFQ_DFITCTRLUPDMIN 0x0163
DMC_NFQ_DFITCTRLUPDMAX 0x0164
DMC_NFQ_DFITREFMSKI 0x0166
DMC_NFQ_DFITCTRLUPDI 0x0167
DMC_NFQ_DFITDRAMCLK 0x0168
DMC_NFQ_DFITLPRESP 0x016a
DMC_NFQ_TCKECK 0x016c
DMC_NFQ_TREFI 0x016d
DMC_NFQ_TSR 0x016e
DMC_NFQ_TCCDMW 0x016f
DMC_NFQ_TESCKE 0x0170
DMC_NFQ_TREFI_DDR3 0x0171
DMC_NFQ_TZQCAL 0x0172
DMC_NFQ_T10US 0x0173
DMC_NFQ_TMRRI 0x0174
DMC_NFQ_TXS_FAST 0x0175
DMC_NFQ_DFIODTCFG 0x0176
DMC_NFQ_DFIODTCFG1 0x0177
DMC_NFQ_TWODTON 0x0178
DMC_NFQ_TRETRAIN 0x0179
DMC_NFQ_PHYADDRON 0x017a
DMC_NFQ_PHYWRON 0x017b
DMC_NFQ_PHYRDON 0x017c

Amlogic Proprietary and Confidential
Copyright © Amlogic. All rights reserved.

DMC_NFQ_ZQCTRL 0x017d

Table 13-177 DMC_DRAM_DFITPHYUPDTYPE0 0x0180

Bit(s)	R/W	Default	Description
31:0	R/W	0	dfi_phyupd_ack hold time for dfi_phyupd_req type = 0

Table 13-178 DMC_DRAM_DFITPHYUPDTYPE1 0x0181

Bit(s)	R/W	Default	Description
31:0	R/W	0	dfi_phyupd_ack hold time for dfi_phyupd_req type = 1

Table 13-179 DMC_DRAM_DFITPHYUPDTYPE2 0x0182

Bit(s)	R/W	Default	Description
31:0	R/W	0	dfi_phyupd_ack hold time for dfi_phyupd_req type = 2

Table 13-180 DMC_DRAM_DFITPHYUPDTYPE3 0x0183

Bit(s)	R/W	Default	Description
31:0	R/W	0	dfi_phyupd_ack hold time for dfi_phyupd_req type = 3

Table 13-181 DMC_DRAM_MCFG 0x0186

Bit(s)	R/W	Default	Description
31:30	R/W	0	not used.
29	R/W	0	freq_change request from dmc_clk_feq. 1: enable. 0 use local dmc freq_change request.
28	R/W	0	in LPDDR4 mode, retraining request from dmc_clk_freq. 1: enable. 0: use local dmc retraining request.
27	R/W	0	use auto_refr request from dmc_clk_freq. 1: enabled. 0 use local dmc auto refresh request.
26:24	R/W	0	rank1_d16_sel. 16bit mode, rank 1 byte selection.
23	R/W	0	not used.
22:20	R/W	0	rank0_d16_sel. 16bit mode, rank 0 byte selection.
19	R/W	0	send PHY ZQ command after siu self refresh exit. 1: enable. 0: disable.
18	R/W	0	send retrain command after siu self refresh exit. 1: enable. 0: disable.
17.	R/W	0	in DDR3/4 mode, send ZQCL command after exit register triggered self refresh.
16.	R/W	0	send refresh command after finish frequency change. 1 disable.
15.	R/W	0	send refresh command after finish LPDDR4 retraining. 1 disable.
14.	R/W	0	1 cke init high.
13	R/W	0	1 dbi write enable only for LPDDR4.
12.	R/W	0	1 dbi read high inversion.

Amlogic Proprietary and Confidential
Copyright © Amlogic. All rights reserved.

Bit(s)	R/W	Default	Description
11.	R/W	0	1 dbi not enabled.
10	R/W	0	1 enable staggered chip select for 2 ranks DRAM.
9	R/W	0	1 enable send auto refresh command to DDR SDRAM when PCTL is in CFG/ STOP state.
8	R/W	0	send auto refr cmd before enter register triggered self refresh
7	R/W	0	send auto refr cmd after exit register triggered self refresh mode.
6	R/W	0	disable dram clock after enter register triggered self refresh.
5	R/W	0	send DFI_LP_REQ to PHY after enter register triggered elf refresh mode.
4	R/W	0	send DRAM to power down mode after enter self refresh. ONLY for LPDDR4.
3	R/W	0	send DFI_CTRLUPD_REQ after exit register triggered self refresh.
2	R/W	0	send ZQCS command after exit register triggered self refresh.
1	R/W	0	enable PHY triggered DFI_PHYUPD_REQ.
0	R/W	0	2T mode. always 1 in DDR3/4 mode.

Table 13-182 DMC_DRAM_ZQ_CTRL 0x0187

Bit(s)	R/W	Default	Description
31:3	R/W	0	Not used
2	R/W	0	ZQ command must be send in different time.
1	R/W	0	ZQ command can be send at same time.
0	R/W	0	rank0 ZQ only

Table 13-183 DMC_DRAM_MCFG1 0x0188

Bit(s)	R/W	Default	Description
31:8	R/W	0	Not used
7:0	R/W	0xf8	LPDDR4 MRW DBI data mask pattern. //default 8'b11111000;

Table 13-184 DMC_DRAM_DFI_CTRL 0x0189

Bit(s)	R/W	Default	Description
31	R/W	0	siu_dfi_lat err generation enable.1 disable.
20	R/W	0	phy_ctrl_rd_on phy_ctrl_wr_on ignore 16bit mode. 1: sending 0xf in 16bit mode. 0: sending valid byte enable in 16bit mode
19	R/W	0	dfi_init_complete wait enable. 1: after dfi_init_complete, wait additional EXSR time for new command. 0: phy will handle all the timing after dfi_init_complete DMC can do everything they want.
18	R/W	0	dfi_rddata_cs_n polariy. 0: rank0 select = 2'b10. rank1 select = 2'b10. 1: rank0 select = 2'b01, rank1_select = 2'b10.
17	R/W	0	dfi_wrdata_cs_n polariy. 0: rank0 select = 2'b10. rank1 select = 2'b10. 1: rank0 select = 2'b01, rank1_select = 2'b10.

Amlogic Proprietary and Confidential
Copyright © Amlogic. All rights reserved.

Bit(s)	R/W	Default	Description
16	R/W	0	force PHY ctrl_on if = 1, phy_ctrl_on signal will keep on.
15	R/W	0	siu_dfi1_lp_en
14	R/W	0	siu_dfi_lp_ack_and
13	R/W	0	siu_dfi_lp_ack_or
12	R/W	0	siu_dfi1_init_start_en
11	R/W	0	siu_dfi_init_com_and
10	R/W	0	siu_dfi_init_com_or
9	R/W	0	siu_dfi1_freq_en
8	R/W	0	siu_dfi1_dram_clk_dis_en
7	R/W	0	siu_dfi_phyupd_type_sel
6	R/W	0	siu_dfi1_phyupd_ack_en
5	R/W	0	siu_dfi_phyupd_req_and
4	R/W	0	siu_dfi_phyupd_req_or
3	R/W	0	siu_dfi_ctrlupd_ack_and
2	R/W	0	siu_dfi_ctrlupd_ack_or
1	R/W	0	siu_dfi1_ctrlupd_req_en
0	R/W	0	siu_dfi1_cmd_en

Table 13-185 DMC_DRAM_DFIINITCFG 0x018a

Bit(s)	R/W	Default	Description
31.	R/W	0	dfi_init_complete status. read only.
15:14	R/W	0	Frequency set 1 dfi_freq_ratio value.
12:8	R/W	0	Frequency set 1 dfi_freq value.
7:6	R/W	0	Frequency set 0 dfi_freq_ratio value.
5:1	R/W	0	Frequency set 0 dfi_freq value.
0.	R/W	0	dfi_init_start value can be use manually config dfi_init_start signal.

Table 13-186 DMC_DRAM_APD_CTRL 0x018c

Bit(s)	R/W	Default	Description
19:16	R/W	0	16DFI_LP_WAKEUP value in APD DFI_LP_REQ mode
12	R/W	0	1 fast mode.
11	R/W	0	enable DFI_LP_REQ when enter Auto power down mode.
10	R/W	0	disable DFI_clk_disable when enter auto power down mode.
9:0	R/W	0	0 disable auto power down mode.

Amlogic Proprietary and Confidential
Copyright © Amlogic. All rights reserved.

Table 13-187 DMC_DRAM_ASR_CTRL 0x018d

Bit(s)	R/W	Default	Description
31	R/W	0	enable RETRAIN PHY after auto self refresh exit. for AM_PHY only.
30.	R/W	0	in DDR3/4 mode, send ZQCL command after exit from auto self refresh mode.
29.	R/W	0	enable PHY clock in LP2 mode.1 disable.
28.	R/W	0	enable dmc wait 10us after LP2 mode exit if it's long time the PHY in LP2 mode.
27:24	R/W	0	DFI_LP_WAKEUP value in self refresh DFI_LP_REQ mode.
23	R/W	0	send REFRESH command after exit from auto self refersh mode(ASR).
22	R/W	0	send REFERSH command before enter to Auto self refresh mode(ASR).
21	R/W	0	send ZQCS command after exit from Auto self refresh mode(ASR).
20	R/W	0	send dfi_ctrl_upd after exit from ASR mode
19	R/W	0	send power down command when enter ASR mode. //for LPDDR4 only.
18	R/W	0	set the PHY enter LP2 mode after enter ASR mode.
17	R/W	0	send DFI_LP_REQafter enter ASR mode.
16	R/W	0	set DFI_CLK_DISABLE after enter ASR mode.
15:0	R/W	0	0 disable auto ASR mode. Not 0 value enable ASR mode.

Table 13-188 DMC_DRAM_REFR_CTRL 0x0192

Bit(s)	R/W	Default	Description
22	R/W	0	dmc to control DFI_CTRLUPD_REQ with zq generation together.
21	R/W	0	dmc to control PHY ZQ generation enable.
20	R/W	0	dmc to control zqlat(in LPDDR4 mode) generation enable.
19	R/W	0	dmc to control zqcs1 generation enable.
18	R/W	0	dmc to control zqcs0 generation enable.
17:8	R/W	0	auto refresh request pending cnt if there's page hit request.
7	R/W	0	retrain enable for auto refresh request. 1: enable. 0: disable.
6	R/W	0	Disabled auto refresh command if over 16 auto refresh command sent in 2 TREFI_DDR3 period
5	R/W	0	enable dmc send ZQCS command .
4.	R/W	0	enable dmc send DFI_CTRUPD_REQ.
3:1	R/W	0	how many refresh command send for one period. = this number + 1
0.	R/W	0	enable dmc send auto refresh command.

Table 13-189 DMC_DRAM_FREQ_CTRL 0x0093

Bit(s)	R/W	Default	Description
31	R/W	0	write 1 to change frequency read 0: finished.
30	R/W	0	waiting for software to send some manual command. 1: waiting. 0: not ready yet.

Amlogic Proprietary and Confidential
Copyright © Amlogic. All rights reserved.

Bit(s)	R/W	Default	Description
29:22	R/W	0	not used.
21	R/W	0	after Freqchange send PHY ZQ update.
20	R/W	0	send CTRLUPD_REQ to PHY after freq_change finished.
19:16	R/W	0	how many cycles to send PLL change req after init_complete signal to low.
15.	R/W	0	freq pre config_en. Before freq enter stop state let DMC configure DDR SDRAM.
14.	R/W	0	freq post config_en. After freq enter stop state let DMC configure DDR SDRAM.
13.	R/W	0	send zqcl after freq change in DDR3/4 mode.
12.	R/W	0	send zqcs after freq change. 1 enable. 0 not send.
11.	R/W	0	in AUTO MRW function MRW format.
10.	R/W	0	AUTO MRW function don't do auto MRW.
9.	R/W	0	1 FREQ MRW done. let FREQ change machine continue.
8	R/W	0	FREQ WAIT. 1 when freq change finishes, state machine stop at self refresh state in case there's something need to handle. 0 after freq change finishes the state machine go back to access state.
7	R/W	0	when change PLL setting, disable dmc clock
6	R/W	0	when change PLL setting, disable PHY DfiClk and DfiCtlClk.
5	R/W	0	check vpu_sleep_en ==1 when do FREQ change.if vpu_sleep_en == 0, just wait.
4	R/W	0	nxt frequency selection.1 = freq1. 0 = freq0.
3:1	R/W	0	not used.
0.	R/W	0	current frequency selection.

Table 13-190 DMC_DRAM_SCFG 0x0194

Bit(s)	R/W	Default	Description
2	R/W	0	1:to ask PCTL enter ACCESS STATE. 0:desert the request.
1	R/W	0	1:to ask PCTL enter SELF REFRESH STATE. 0:desert the request.
0	R/W	0	1:to ask PCTL enter STOP/CONFIG STATE. 0:desert the request.

Table 13-191 DMC_DRAM_STAT 0x0195

Bit(s)	R/W	Default	Description
31	Read only	0	rd latency error. 1 means after dfiphytrdlat cycles, the read data still not back.
28:24	Read only	0	dram_sr_state
23:20	Read only	0	stop_st
19:15	Read only	0	sleep_st
14:12	Read only	0	2 ACCESS STATUS 0: ACCESS is in normal working mode. 1: ACCESS sending precharge command.

Amlogic Proprietary and Confidential
Copyright © Amlogic. All rights reserved.

Bit(s)	R/W	Default	Description
			2: ACCESS sending AUTO REFESH command. 3: ACCESS sending DIF_CTRLUPD_REQ command. 4: ACCESS sending ZQCS command to DDR DRAM(ZQCAL for LPDDR4). 5: ACCESS sending ZQLATCH command to LPDDR4 only.
11:8	Read only	0	5 APD STATUS APD_IDLE 1: APD sending PRECHARGE command 2: APD sending CKE low command 3: APD sending DISABLE DRAM CLOCK command 4: APD sending DFI_LP_CTRL_REQ : APD in Auto Power down mode. : APD desert DFI_LP_CTRL_REQ : APD sending enable DRAM CLOCK command 8: APD sending out CKE high command.
7:4	Read only	0	DRAM IDLE DRAM_STOP/DRAM_CFG DRAM_ACCESS DRAM_SLEEP DRAM APD(AUTO POWER DOWN). IDLE -> STOP/CONFIG STOP -> SLEEP STOP -> ACCESS ACCESS -> SLEEP. ACCESS -> STOP A: ACCESS -> APD B: SLEEP -> STOP C: SLEEP -> ACCESS D: APD -> ACCESS
3	Read only	0	reserved.
2	Read only	0	1 DRAM enter normal working state.
1	Read only	0	1 DRAM enter sleep state. self refresh state.
0	Read only	0	1 dram enter cfg state.

Table 13-192 DMC_DRAM_STAT1 0x0196

Bit(s)	R/W	Default	Description
11:8	Read only	0	freq_st. 4'h0: IDLE 4'h1: FREQ_CHECK_VPU 4'h2: FREQ_WAITING_STOP 4'h3: FREQ_DRAM_CFG. waiting DMC/software to send special MRW/MPC command to configure DDR SDRAM either before Freq change or after freq change. 4'h4: FREQ_SELF_REFR_ST. 4'h5: FREQ_SET_DFI_FREQ. 4'h6: FREQ_DFI_INIT_START_HIGH. 4'h7: FREQ_CHANGE PLL_ST. 4'h8: FREQ_UPDATA REG. 4'h9: FREQ_DFI_INIT_START_LOW. 4'ha: FREQ_WAITING_FINISH 4'hb: FREQ_ZQCS 4'hc: FREQ_ZQ_LATCH 4'hd: FREQ_PVT
7:5	Read only	0	train_st
4:0	Read only	0	dram_phy_st

Amlogic Proprietary and Confidential
Copyright © Amlogic. All rights reserved.

Table 13-193 DMC_PHY_RETRAINING_CTRL 0x0197

Bit(s)	R/W	Default	Description
31	R/W	0	phy_retraining enable.
30	R/W	0	checkvpu sleep_en.
25:24	R/W	0	retraining dfi_freq[4:3], the [2:0] bit still use the dfi_freq bits to keep the frequency.
23:0	R/W	0	retraining period unit:100ns.

Table 13-194 DMC_DFI_ERR_STAT 0x0198

Bit(s)	R/W	Default	Description
31:0	Read only	0	20. not used.
9:0	Read only	0	ddr0_dfi_error
8:5	Read only	0	ddr0_dfi_error_info.
4:0	Read only	0	ddr1_dfi_error.
3:0	Read only	0	ddr1_dfi_error_info.

Table 13-195 DMC_LP2_TIMER 0x019a

Bit(s)	R/W	Default	Description
15:0			timer setting to measure how long the chip is entered LP2 mode.

Table 13-196 DMC_DRAM_COMPLETE_WAIT 0x019a

Bit(s)	R/W	Default	Description
31:0	R/W	0	how long to waiting for DFI_INIT_COMPLETE become high after DFI_INIT_ START triggered.

Table 13-197 DMC_DRAM_DFI_SWAP_0 0x01a0

Bit(s)	R/W	Default	Description
5:0	R/W	0	dfi_act_ndfi_act_n function select 6'h00 :the function itself. 6'h01 :act_n. 6'h02 : ras_n. 6'h03 :cas_n. 6'h04 :we_n. 6'h05 :bg[0]. 6'h06 :bg[1]. 6'h07 :ba[0]. 6'h08 : ba[1]. 6'h09 :ba[2]. 6'h0a :a[0]. 6'h0b :a[1]. 6'h0c :a[2]. 6'h0d :a[3]. 6'h0e :a[4]. 6'h0f :a[5]. 6'h10 :a[6]. 6'h11 :a[7]. 6'h12 :a[8]. 6'h13 :a[9]. 6'h14 :a[10]. 6'h15 :a [11]. 6'h16 :a[12]. 6'h17 :a[13]. 6'h18 :a[14]. 6'h19 :a[15]. 6'h1a :a[16]. 6'h1b :a [17]. function select 6'h00 :the function itself. 6'h01 :act_n. 6'h02 :ras_n. 6'h03 : cas_n. 6'h04 :we_n. 6'h05 :bg[0]. 6'h06 :bg[1]. 6'h07 :ba[0]. 6'h08 :ba[1]. 6'h09 : ba[2]. 6'h0a :a[0]. 6'h0b :a[1]. 6'h0c :a[2]. 6'h0d :a[3]. 6'h0e :a[4]. 6'h0f :a[5]. 6'h10 :a[6]. 6'h11 :a[7]. 6'h12 :a[8]. 6'h13 :a[9]. 6'h14 :a[10]. 6'h15 :a[11]. 6'h16 :a [12]. 6'h17 :a[13]. 6'h18 :a[14]. 6'h19 :a[15]. 6'h1a :a[16]. 6'h1b :a[17].

Amlogic Proprietary and Confidential
Copyright © Amlogic. All rights reserved.

Table 13-198 DMC_DRAM_DFI_SWAP_1 0x01a1

Bit(s)	R/W	Default	Description
5:0	R/W	0	dfi_ras_n function select 6'h00 :the function itself 6'h01 :act_n. 6'h02 :ras_n. 6'h03 :cas_n. 6'h04 :we_n. 6'h05 :bg[0]. 6'h06 :bg[1]. 6'h07 :ba[0]. 6'h08 :ba[1]. 6'h09 :ba[2]. 6'h0a :a[0]. 6'h0b :a[1]. 6'h0c :a[2]. 6'h0d :a[3]. 6'h0e :a[4]. 6'h0f :a[5]. 6'h10 :a[6]. 6'h11 :a[7]. 6'h12 :a[8]. 6'h13 :a[9]. 6'h14 :a[10]. 6'h15 :a[11]. 6'h16 :a[12]. 6'h17 :a[13]. 6'h18 :a[14]. 6'h19 :a[15]. 6'h1a :a[16]. 6'h1b :a[17].

Table 13-199 DMC_DRAM_DFI_SWAP_2 0x01a2

Bit(s)	R/W	Default	Description
5:0	R/W	0	dfi_cas_n function select 6'h00 :the function itself. 6'h01 :act_n. 6'h02 :ras_n. 6'h03 :cas_n. 6'h04 :we_n. 6'h05 :bg[0]. 6'h06 :bg[1]. 6'h07 :ba[0]. 6'h08 :ba[1]. 6'h09 :ba[2]. 6'h0a :a[0]. 6'h0b :a[1]. 6'h0c :a[2]. 6'h0d :a[3]. 6'h0e :a[4]. 6'h0f :a[5]. 6'h10 :a[6]. 6'h11 :a[7]. 6'h12 :a[8]. 6'h13 :a[9]. 6'h14 :a[10]. 6'h15 :a[11]. 6'h16 :a[12]. 6'h17 :a[13]. 6'h18 :a[14]. 6'h19 :a[15]. 6'h1a :a[16]. 6'h1b :a[17].

Table 13-200 DMC_DRAM_DFI_SWAP_3 0x01a3

Bit(s)	R/W	Default	Description
5:0	R/W	0	dfi_we_n function select 6'h00 :the function itself. 6'h01 :act_n. 6'h02 :ras_n. 6'h03 :cas_n. 6'h04 :we_n. 6'h05 :bg[0]. 6'h06 :bg[1]. 6'h07 :ba[0]. 6'h08 :ba[1]. 6'h09 :ba[2]. 6'h0a :a[0]. 6'h0b :a[1]. 6'h0c :a[2]. 6'h0d :a[3]. 6'h0e :a[4]. 6'h0f :a[5]. 6'h10 :a[6]. 6'h11 :a[7]. 6'h12 :a[8]. 6'h13 :a[9]. 6'h14 :a[10]. 6'h15 :a[11]. 6'h16 :a[12]. 6'h17 :a[13]. 6'h18 :a[14]. 6'h19 :a[15]. 6'h1a :a[16]. 6'h1b :a[17].

Table 13-201 DMC_DRAM_DFI_SWAP_4 0x01a4

Bit(s)	R/W	Default	Description
5:0	R/W	0	dfi_bg0 function select 6'h00 :the function itself. 6'h01 :act_n. 6'h02 :ras_n. 6'h03 :cas_n. 6'h04 :we_n. 6'h05 :bg[0]. 6'h06 :bg[1]. 6'h07 :ba[0]. 6'h08 :ba[1]. 6'h09 :ba[2]. 6'h0a :a[0]. 6'h0b :a[1]. 6'h0c :a[2]. 6'h0d :a[3]. 6'h0e :a[4]. 6'h0f :a[5]. 6'h10 :a[6]. 6'h11 :a[7]. 6'h12 :a[8]. 6'h13 :a[9]. 6'h14 :a[10]. 6'h15 :a[11]. 6'h16 :a[12]. 6'h17 :a[13]. 6'h18 :a[14]. 6'h19 :a[15]. 6'h1a :a[16]. 6'h1b :a[17].

Table 13-202 DMC_DRAM_DFI_SWAP_5 0x01a5

Bit(s)	R/W	Default	Description
5:0	R/W	0	dfi_bg[1] function select 6'h00 :the function itself. 6'h01 :act_n. 6'h02 :ras_n. 6'h03 :cas_n. 6'h04 :we_n. 6'h05 :bg[0]. 6'h06 :bg[1]. 6'h07 :ba[0]. 6'h08 :ba[1]. 6'h09 :ba[2]. 6'h0a :a[0]. 6'h0b :a[1]. 6'h0c :a[2]. 6'h0d :a[3]. 6'h0e :a[4]. 6'h0f :a[5]. 6'h10 :a[6]. 6'h11 :a[7]. 6'h12 :a[8]. 6'h13 :a[9]. 6'h14 :a[10]. 6'h15 :a[11]. 6'h16 :a[12]. 6'h17 :a[13]. 6'h18 :a[14]. 6'h19 :a[15]. 6'h1a :a[16]. 6'h1b :a[17].

Table 13-203 DMC_DRAM_DFI_SWAP_6 0x01a6

Bit(s)	R/W	Default	Description
5:0	R/W	0	dfi_ba[0] function select 6'h00 :the function itself. 6'h01 :act_n. 6'h02 :ras_n. 6'h03 :cas_n. 6'h04 :we_n. 6'h05 :bg[0]. 6'h06 :bg[1]. 6'h07 :ba[0]. 6'h08 :ba[1]. 6'h09 :ba[2]. 6'h0a :a[0]. 6'h0b :a[1]. 6'h0c :a[2]. 6'h0d :a[3]. 6'h0e :a[4]. 6'h0f :a[5]. 6'h10 :a[6]. 6'h11 :a[7]. 6'h12 :a[8]. 6'h13 :a[9]. 6'h14 :a[10]. 6'h15 :a[11]. 6'h16 :a[12]. 6'h17 :a[13]. 6'h18 :a[14]. 6'h19 :a[15]. 6'h1a :a[16]. 6'h1b :a[17].

Amlogic Proprietary and Confidential
Copyright © Amlogic. All rights reserved.

Table 13-204 DMC_DRAM_DFI_SWAP_7 0x01a7

Bit(s)	R/W	Default	Description
5:0	R/W	0	dfi_ba[1] function select 6'h00 :the function itself. 6'h01 :act_n. 6'h02 :ras_n. 6'h03 :cas_n. 6'h04 :we_n. 6'h05 :bg[0]. 6'h06 :bg[1]. 6'h07 :ba[0]. 6'h08 :ba[1]. 6'h09 :ba[2]. 6'h0a :a[0]. 6'h0b :a[1]. 6'h0c :a[2]. 6'h0d :a[3]. 6'h0e :a[4]. 6'h0f :a[5]. 6'h10 :a[6]. 6'h11 :a[7]. 6'h12 :a[8]. 6'h13 :a[9]. 6'h14 :a[10]. 6'h15 :a[11]. 6'h16 :a[12]. 6'h17 :a[13]. 6'h18 :a[14]. 6'h19 :a[15]. 6'h1a :a[16]. 6'h1b :a[17].

Table 13-205 DMC_DRAM_DFI_SWAP_8 0x01a8

Bit(s)	R/W	Default	Description
5:0	R/W	0	dfi_ba[2] function select 6'h00 :the function itself. 6'h01 :act_n. 6'h02 :ras_n. 6'h03 :cas_n. 6'h04 :we_n. 6'h05 :bg[0]. 6'h06 :bg[1]. 6'h07 :ba[0]. 6'h08 :ba[1]. 6'h09 :ba[2]. 6'h0a :a[0]. 6'h0b :a[1]. 6'h0c :a[2]. 6'h0d :a[3]. 6'h0e :a[4]. 6'h0f :a[5]. 6'h10 :a[6]. 6'h11 :a[7]. 6'h12 :a[8]. 6'h13 :a[9]. 6'h14 :a[10]. 6'h15 :a[11]. 6'h16 :a[12]. 6'h17 :a[13]. 6'h18 :a[14]. 6'h19 :a[15]. 6'h1a :a[16]. 6'h1b :a[17].

Table 13-206 DMC_DRAM_DFI_SWAP_9 0x01a9

Bit(s)	R/W	Default	Description
5:0	R/W	0	dfi_a[0] function select 6'h00 :the function itself. 6'h01 :act_n. 6'h02 :ras_n. 6'h03 :cas_n. 6'h04 :we_n. 6'h05 :bg[0]. 6'h06 :bg[1]. 6'h07 :ba[0]. 6'h08 :ba[1]. 6'h09 :ba[2]. 6'h0a :a[0]. 6'h0b :a[1]. 6'h0c :a[2]. 6'h0d :a[3]. 6'h0e :a[4]. 6'h0f :a[5]. 6'h10 :a[6]. 6'h11 :a[7]. 6'h12 :a[8]. 6'h13 :a[9]. 6'h14 :a[10]. 6'h15 :a[11]. 6'h16 :a[12]. 6'h17 :a[13]. 6'h18 :a[14]. 6'h19 :a[15]. 6'h1a :a[16]. 6'h1b :a[17].

Table 13-207 DMC_DRAM_DFI_SWAP_10 0x01aa

Bit(s)	R/W	Default	Description
5:0	R/W	0	dfi_a[1] function select

Table 13-208 DMC_DRAM_DFI_SWAP_11 0x01ab

Bit(s)	R/W	Default	Description
5:0	R/W	0	dfi_a[2] function select

Table 13-209 DMC_DRAM_DFI_SWAP_12 0x01ac

Bit(s)	R/W	Default	Description
5:0	R/W	0	dfi_a[3] function select

Table 13-210 DMC_DRAM_DFI_SWAP_13 0x01ad

Bit(s)	R/W	Default	Description
5:0	R/W	0	dfi_a[4] function select

Amlogic Proprietary and Confidential
Copyright © Amlogic. All rights reserved.

Table 13-211 DMC_DRAM_DFI_SWAP_14 0x01ae

Bit(s)	R/W	Default	Description
5:0	R/W	0	dfi_a[5] function select

Table 13-212 DMC_DRAM_DFI_SWAP_15 0x01af

Bit(s)	R/W	Default	Description
5:0	R/W	0	dfi_a[6] function select

Table 13-213 DMC_DRAM_DFI_SWAP_16 0x01b0

Bit(s)	R/W	Default	Description
5:0	R/W	0	dfi_a[7] function select

Table 13-214 DMC_DRAM_DFI_SWAP_17 0x01b1

Bit(s)	R/W	Default	Description
5:0	R/W	0	dfi_a[8] function select

Table 13-215 DMC_DRAM_DFI_SWAP_18 0x01b2

Bit(s)	R/W	Default	Description
5:0	R/W	0	dfi_a[9] function select

Table 13-216 DMC_DRAM_DFI_SWAP_19 0x01b3

Bit(s)	R/W	Default	Description
5:0	R/W	0	dfi_a[10] function select

Table 13-217 DMC_DRAM_DFI_SWAP_20 0x01b4

Bit(s)	R/W	Default	Description
5:0	R/W	0	dfi_a[11] function select

Table 13-218 DMC_DRAM_DFI_SWAP_21 0x01b5

Bit(s)	R/W	Default	Description
5:0	R/W	0	dfi_a[12] function select

Table 13-219 DMC_DRAM_DFI_SWAP_22 0x01b6

Bit(s)	R/W	Default	Description
5:0	R/W	0	dfi_a[13] function select

Amlogic Proprietary and Confidential
Copyright © Amlogic. All rights reserved.

Table 13-220 DMC_DRAM_DFI_SWAP_23 0x01b7

Bit(s)	R/W	Default	Description
5:0	R/W	0	dfi_a[14] function select

Table 13-221 DMC_DRAM_DFI_SWAP_24 0x01b8

Bit(s)	R/W	Default	Description
5:0	R/W	0	dfi_a[15] function select

Table 13-222 DMC_DRAM_DFI_SWAP_25 0x01b9

Bit(s)	R/W	Default	Description
5:0	R/W	0	dfi_a[16] function select

Table 13-223 DMC_DRAM_DFI_SWAP_26 0x01ba

Bit(s)	R/W	Default	Description
5:0	R/W	0	dfi_a[17] function select

Table 13-224 DMC_DRAM_CMD 0x01d0

Bit(s)	R/W	Default	Description
31.	R/W	0	cmd done. write 0 to clean.
30.	R/W	0	data done. write 0 to clean.
5.	R/W	0	user defined command.
4.	R/W	0	LPDDR4 MPC write data command (MPC WR FIFO).
3.	R/W	0	LPDDR4 MPC read data command (MPC RD Calibration and RD FIFO).
2.	R/W	0	LPDDR4 MPC-1 command (NOP, start DQS interval)
1.	R/W	0	mrr command.
0.	R/W	0	mrw command.

Table 13-225 DMC_DRAM_CMD_CODE 0x01d1

Bit(s)	R/W	Default	Description
31:28	R/W	0	user command case = {act_n, ras_n, cas_n, we_n}
27:26.	R/W	0	128bits data cycles . 0:1 clock cycles; 1:2 clock cycles; 2:3 clock cycles; 3:4 clock cycles. LPDDR4: 4 clock cycles; DDR3/4/LPDDR3: 2 clock cycles.
25	R/W	0	MRW/MRR/MPC command rank 1 select. 1:select. 0:not select.
24.	R/W	0	MRW/MRR/MPC command rank 0 select. 1:select. 0:not select.

Amlogic Proprietary and Confidential
Copyright © Amlogic. All rights reserved.

Bit(s)	R/W	Default	Description
23:16	R/W	0	MR addr. DDR4 case: 18:16 ba[2:0]. 20:19 BG[1:0].
15:0	R/W	0	opcode.

Table 13-226 DMC_DRAM_CMD_TIME 0x01d2

Bit(s)	R/W	Default	Description
31:16	R/W	0	PRECMD timer. //delay how many cycle to start the command.
15:0	R/W	0	POST CMD timer//delay how many cycle after the command execute.

MPC WR FIFO command DBI WRITE data

Table 13-227 DMC_DRAM_WSTRB0 0x01d3

Bit(s)	R/W	Default	Description
31:16	R/W	0	the second cycle.
15:0	R/W	0	the first cycle.

MPC WR FIFO command DBI WRITE data

Table 13-228 DMC_DRAM_WSTRB1 0x01d4

Bit(s)	R/W	Default	Description
31:16	R/W	0	the second cycle.
15:0	R/W	0	the first cycle.

MPC RD FIFO command DBI read back data

Table 13-229 DMC_DRAM_RDBI0 0x01d5

Bit(s)	R/W	Default	Description
31:16	R/W	0	the Forth cycle.
15:0	R/W	0	the third cycle.

Table 13-230 DMC_DRAM_RDBI1 0x01d6

Bit(s)	R/W	Default	Description
31:16	R/W	0	the Forth cycle.
15:0	R/W	0	the third cycle.

DMC_DRAM_WDx and DMC_DRAM_RDx can be used as MRW command as Frequency change .

DMC_DRAM_WDx is for Freq1 DRAM MR setting, it would send to DRAM right before FREQ0-> FREQ1

DMC_DRAM_RDx is for Freq0 DRAM MR setting. it would send to DRAM right before FREQ1-> FREQ0.

Amlogic Proprietary and Confidential
Copyright © Amlogic. All rights reserved.

One register can be one MRW command. So total 16 MRW command can be sent to DRAM.

Table 13-231 DMC_DRAM_WDx and DMC_DRAM_RDx

Bit(s)	R/W	Default	Description
31	R/W	0	MRW/USER command enable. 1: enabled command. 0 not enabled.
30	R/W	0	Last MRW/USER command. if this bit =1, After send this command, the DRAM controller will continue to frequency next stage.
29:26	R/W	0	SER COMMAND parameter: in DDR3/DDR4. {act_n, ras_n, cas_n, we_n} value for user command //in LPDDR4. bit 16: 1 4 cycles command. 0 2 cycles command.
25	R/W	0	MRW/USER command rank 1 select. 1: select. 0: not select.
24	R/W	0	MRW/USER command rank 0 select. 1: select. 0: not select.

23:0	R/W	0	USER command.
			//DDR3: 18:16 bank address. 15:0: address.
			//DDR4: 20:19 bank group address. 18:16: bank address. 15:0 address.
			//LPDDR3: 9:0. rising edge address. 19:10. falling edge address.
			//LPDDR4. 5:0, first edge address, 11:6 second edge address,
			17:12: third edge address. 23:18, forth edge address.
			//MRW command format:
			//bit 23:16 MR addr. DDR4 case: 18:16 ba[2:0]. 20:19 BG[1:0].
			//bit 15:0 opcode

DMC_DRAM_WD0 0x01e0

DMC_DRAM_WD1 0x01e1

DMC_DRAM_WD2 0x01e2

DMC_DRAM_WD3 0x01e3

DMC_DRAM_WD4 0x01e4

DMC_DRAM_WD5 0x01e5

DMC_DRAM_WD6 0x01e6

DMC_DRAM_WD7 0x01e7

DMC_DRAM_WD8 0x01e8

DMC_DRAM_WD9 0x01e9

DMC_DRAM_WD10 0x01ea

DMC_DRAM_WD11 0x01eb

DMC_DRAM_WD12 0x01ec

DMC_DRAM_WD13 0x01ed

DMC_DRAM_WD14 0x01ee

DMC_DRAM_WD15 0x01ef

DMC_DRAM_RD0 0x01f0

DMC_DRAM_RD1 0x01f1

DMC_DRAM_RD2 0x01f2

DMC_DRAM_RD3 0x01f3

DMC_DRAM_RD4 0x01f4

DMC_DRAM_RD5 0x01f5

Amlogic Proprietary and Confidential
Copyright © Amlogic. All rights reserved.

DMC_DRAM_RD6 0x01f6

DMC_DRAM_RD7 0x01f7

DMC_DRAM_RD8 0x01f8

DMC_DRAM_RD9 0x01f9

DMC_DRAM_RD10 0x01fa

DMC_DRAM_RD11 0x01fb

DMC_DRAM_RD12 0x01fc

DMC_DRAM_RD13 0x01fd

DMC_DRAM_RD14 0x01fe

DMC_DRAM_RD15 0x01ff

DMC_STICKY_REGISTERS

Each DMC contains 64 sticky registers. Those registers are used to save some temporary value for software to debug DDR PHY. And they are implemented with SRAM. it won't lose if DMC was reset.

DMC_STICKY_0 0x0200

DMC_STICKY_1 0x0201

DMC_STICKY_2 0x0202

DMC_STICKY_3 0x0203

DMC_STICKY_4 0x0204

DMC_STICKY_5 0x0205

DMC_STICKY_6 0x0206

DMC_STICKY_7 0x0207

DMC_STICKY_8 0x0208

DMC_STICKY_9 0x0209

DMC_STICKY_10 0x020a

DMC_STICKY_11 0x020b

DMC_STICKY_12 0x020c

DMC_STICKY_13 0x020d

DMC_STICKY_14 0x020e

DMC_STICKY_15 0x020f

DMC_STICKY_16 0x0210

DMC_STICKY_17 0x0211

DMC_STICKY_18 0x0212

DMC_STICKY_19 0x0213

DMC_STICKY_20 0x0214

DMC_STICKY_21 0x0215

DMC_STICKY_22 0x0216

DMC_STICKY_23 0x0217

DMC_STICKY_24 0x0218

Amlogic Proprietary and Confidential
Copyright © Amlogic. All rights reserved.

DMC_STICKY_25	0x0219
DMC_STICKY_26	0x021a
DMC_STICKY_27	0x021b
DMC_STICKY_28	0x021c
DMC_STICKY_29	0x021d
DMC_STICKY_30	0x021e
DMC_STICKY_31	0x021f
DMC_STICKY_32	0x0220
DMC_STICKY_33	0x0221
DMC_STICKY_34	0x0222
DMC_STICKY_35	0x0223
DMC_STICKY_36	0x0224
DMC_STICKY_37	0x0225
DMC_STICKY_38	0x0226
DMC_STICKY_39	0x0227
DMC_STICKY_40	0x0228
DMC_STICKY_41	0x0229
DMC_STICKY_42	0x022a
DMC_STICKY_43	0x022b
DMC_STICKY_44	0x022c
DMC_STICKY_45	0x022d
DMC_STICKY_46	0x022e
DMC_STICKY_47	0x022f
DMC_STICKY_48	0x0230
DMC_STICKY_49	0x0231
DMC_STICKY_50	0x0232
DMC_STICKY_51	0x0233
DMC_STICKY_52	0x0234
DMC_STICKY_53	0x0235
DMC_STICKY_54	0x0236
DMC_STICKY_55	0x0237
DMC_STICKY_56	0x0238
DMC_STICKY_57	0x0239
DMC_STICKY_58	0x023a
DMC_STICKY_59	0x023b
DMC_STICKY_60	0x023c
DMC_STICKY_61	0x023d
DMC_STICKY_62	0x023e

Amlogic Proprietary and Confidential
Copyright © Amlogic. All rights reserved.

DMC_STICKY_63 0x023f

Table 13-232 DMC_TEST_STA 0x0350

Bit(s)	R/W	Default	Description
31:0	R/W	0	TEST start address low 32bits. low 6 bits should be 0.

Table 13-233 DMC_TEST_STA_HI 0x0351

Bit(s)	R/W	Default	Description
1:0	R/W	0	TEST start address higher 2 bits.

Table 13-234 DMC_TEST_EDA 0x0352

Bit(s)	R/W	Default	Description
31:0	R/W	0	TEST end address low 32bits. low 6 bits should be 0.

Table 13-235 DMC_TEST_EDA_HI 0x0353

Bit(s)	R/W	Default	Description
1:0	R/W	0	TEST end address higher 2 bits.

Table 13-236 DMC_TEST_CTRL 0x0354

Bit(s)	R/W	Default	Description
31.	R/W	0	enable test.
30.	R/W	0	when enable test, enable the write to DDR function.
29.	R/W	0	when enable test, enable the read from DDR function.
27.	R/W	0	enable to compare data. when do the read enable to enable the error comparison. suppose the read data should be same as the data in the write buffer.
26.	R/W	0	max_err_stop enable. 1: stop the test if err_cnt over max_err configure. 0: disable.
24.	R/W	0	done type.0 use the DMC_TEST_NUM register as the counter of test numbers. for write if the write command number == the DMC_TEST_NUM, the write is done. for read if the read command number == the DMC TEST_num, the read id done. for one read command can be repeated repeat number times. 1:finished at end address.
22:20	R/W	0	read repeat times. for non-sha function, we can define multi times of the read. the test module would repeat the same address repeat times.
19.	R/W	0	limit write.0 no outstanding write request limitation. 1:limit the outstanding write commands to the number of bits [15:8]
18.	R/W	0	limit read.0. no outstanding read request limitation. 1. limit the read outstanding request to the number of bits[7:0].
15:8	R/W	0	write outstanding commands limit.
7:0	R/W	0	read outstanding commands limit.

Amlogic Proprietary and Confidential
Copyright © Amlogic. All rights reserved.

Table 13-237 DMC_TEST_NUM 0x0355

Bit(s)	R/W	Default	Description
31:0.	R/W	0	how many test command to end for the test if the DMC_TEST_CTRL bit 24 is 0.

Table 13-238 DMC_TEST_WDG 0x0356

Bit(s)	R/W	Default	Description
31:16.	R/W	0	write response watch dog.
15:0.	R/W	0	read response watch dog.

Table 13-239 DMC_TEST_MAX_ERR 0x0357

Bit(s)	R/W	Default	Description
31:0	Read only	0	max err counter. if error cnt over this number, stop the test.

Table 13-240 DMC_TEST_COMP_MASK 0x0358

Bit(s)	R/W	Default	Description
31:0	R/W	0	32bits for DMC TEST COMPARE bit enable. 1: to MASK this bit. 0: compare this bit.

Table 13-241 DMC_TEST_WRDATA_ADDR 0x0359

Bit(s)	R/W	Default	Description
31:7	R/W	0	Not used.
6:0	R/W	0	WRDATA pattern APB configure address. total 128 32bits wrdata pattern.

Table 13-242 DMC_TEST_WRDATA_VALUE 0x035a

Bit(s)	R/W	Default	Description
31:0	R/W	0	Write this register to configure the WRDATA pattern with DMC_TEST_WRDA-TA_ADDR address. Write this register would trigger WRDATA_ADDR + 1.

Table 13-243 DMC_TEST_RDEXP _ADDR 0x035b

Bit(s)	R/W	Default	Description
31:7	R/W	0	Not used.
6:0	R/W	0	Expect data pattern APB configure address. Total 128 32bits read expected data pattern.

Amlogic Proprietary and Confidential
Copyright © Amlogic. All rights reserved.

Table 13-244 DMC_TEST_RDEXP_VALUE 0x035c

Bit(s)	R/W	Default	Description
31:0	R/W	0	Write this register to configure the READ EXP data pattern with DMC_TEST_ RDEXP_ADDR address. Write this register would trigger RDEXP_ADDR + 1..

Table 13-245 DMC_TEST_ERR_ADDR 0x0340

Bit(s)	R/W	Default	Description
31:0	Read only	0	the first error address lower 32bits.

Table 13-246 DMC_TEST_ERR_ADDR_HI 0x0341

Bit(s)	R/W	Default	Description
31:0	Read only	0	the first error address higher 2 bits.

Table 13-247 DMC_TEST_ERR_CNT 0x0342

Bit(s)	R/W	Default	Description
31:0	Read only	0	how many data error happens in the whole test period.

Table 13-248 DMC_TEST_ERR_DATA0 0x0343

Bit(s)	R/W	Default	Description
31:0	Read only	0	the first error data low 32bit.

Table 13-249 DMC_TEST_ERR_DATA1 0x0344

Bit(s)	R/W	Default	Description
31:0	Read only	0	the first error data low [63:32].

Table 13-250 DMC_TEST_ERR_DATA2 0x0345

Bit(s)	R/W	Default	Description
31:0	Read only	0	the first error data low [95:64].

Table 13-251 DMC_TEST_ERR_DATA3 0x0346

Bit(s)	R/W	Default	Description
31:0	Read only	0	the first error data low [127:96].

Amlogic Proprietary and Confidential
Copyright © Amlogic. All rights reserved.

Table 13-252 DMC_TEST_STS 0x0347

Bit(s)	R/W	Default	Description
31,	R/W	0	test done bit. write 1 to clean.
30,	R/W	0	indicate address error
29:7	R/W	0	not used.
6.	R/W	0	read data resp error(caused by security or rd latency).
4,	R/W	0	Maximum error counter violation. write 1 to clean
3,	R/W	0	write done. write 1 to clean.
2,	R/W	0	read done. write 1 to clean
1,	R/W	0	write watchdog triggered. write 1 to clean
0,	R/W	0	read watchdog triggered. write 1 to clean.

Table 13-253 DMC_TEST_WRCMD_ ADDR 0x0348

Bit(s)	R/W	Default	Description
31:0	Read only	0	The current write address lower 32bits.

Table 13-254 DMC_TEST_WRCMD ADDR_HI 0x0349

Bit(s)	R/W	Default	Description
1:0	Read only	0	The current write address higher 2 bits..

Table 13-255 DMC_TEST_RDCMD_ ADDR 0x034a

Bit(s)	R/W	Default	Description
31:0	Read only	0	The current write address lower 32bits.

Table 13-256 DMC_TEST_RDCMD ADDR_HI 0x034B

Bit(s)	R/W	Default	Description
1:0	Read only	0	The current write address higher 2 bits.

Table 13-257 DMC_TEST_RDRSP_ ADDR 0x034c

Bit(s)	R/W	Default	Description
31:0	Read only	0	The current read response address lower 32bits.

Amlogic Proprietary and Confidential
Copyright © Amlogic. All rights reserved.

Table 13-258 DMC_TEST_RDRSP_ ADDR_HI 0x034d

Bit(s)	R/W	Default	Description
1:0	Read only	0	The current read response address higher 2 bits.

Table 13-259 DMC_SEC_RANGE0_STA 0x0400

Bit(s)	R/W	Default	Description
31:22	R/W	0	Not used.
21:0	R/W	0	Region 0 start address AXI address [33:12] unit 4KB.

Table 13-260 DMC_SEC_RANGE0_EDA 0x0401

Bit(s)	R/W	Default	Description
31:22	R/W	0	Not used.
21:0	R/W	0	Region 0 end address AXI address [33:12] unit 4KB.

Table 13-261 DMC_SEC_RANGE0_CTRL 0x0402

Bit(s)	R/W	Default	Description
7:5	R/W	0	range0_secrity_level | range0 security level for DMC and DEMUX only.
4	R/W	0	range0_prot_en | range0 allow protect monitor function. 1:allowed. 0:not allowed.
3	R/W	0	range0_local_des_en | range0 data des enable. 1:enable. 0:disable. this bit works together with GLOBAL_DES_EN to decide this region data des enable or not.
2	R/W	0	range0_lock | lock range 0 registers. write 1 to lock range 0 register. can't change anymore.
1	R/W	0	range0_key_sel | range 0 data des key selection. 1:key1. 0:key0.
0	R/W	0	range0_en | range 0 enable bit. 1:enable, 0:disable.

Table 13-262 DMC_SEC_RANGE0_RID_CTRL0 0x0403

Bit(s)	R/W	Default	Description
31:0	R/W	0	Range0_rd_sid_en[31:0]

Table 13-263 DMC_SEC_RANGE0_RID_CTRL1 0x0404

Bit(s)	R/W	Default	Description
31:0	R/W	0	Range0_rd_sid_en[63:32]

Table 13-264 DMC_SEC_RANGE0_RID_CTRL2 0x0405

Bit(s)	R/W	Default	Description
31:0	R/W	0	Range0_rd_sid_en[95:64]

Amlogic Proprietary and Confidential
Copyright © Amlogic. All rights reserved.

Table 13-265 DMC_SEC_RANGE0_RID_CTRL3 0x0406

Bit(s)	R/W	Default	Description
31:0	R/W	0	Range0_rd_sid_en[127:96]

Table 13-266 DMC_SEC_RANGE0_RID_CTRL4 0x0407

Bit(s)	R/W	Default	Description
31:0	R/W	0	Range0_rd_sid_en[159:128]

Table 13-267 DMC_SEC_RANGE0_WID_CTRL0 0x0408

Bit(s)	R/W	Default	Description
31:0	R/W	0	Range0_wr_sid_en[31:0]

Table 13-268 DMC_SEC_RANGE0_WID_CTRL1 0x0409

Bit(s)	R/W	Default	Description
31:0	R/W	0	Range0_wr_sid_en[63:32]

Table 13-269 DMC_SEC_RANGE0_WID_CTRL2 0x040a

Bit(s)	R/W	Default	Description
31:0	R/W	0	Range0_wr_sid_en[95:64]

Table 13-270 DMC_SEC_RANGE0_WID_CTRL3 0x040b

Bit(s)	R/W	Default	Description
31:0	R/W	0	Range0_wr_sid_en[127:96]

Table 13-271 DMC_SEC_RANGE0_WID_CTRL4 0x040c

Bit(s)	R/W	Default	Description
31:0	R/W	0	Range0_wr_sid_en[159:128]

Table 13-272 DMC_SEC_RANGE1_STA 0x0410

Bit(s)	R/W	Default	Description
31:22	R/W	0	Not used.
21:0	R/W	0	Region 1 start address AXI address [33:12] unit 4KB.

Amlogic Proprietary and Confidential
Copyright © Amlogic. All rights reserved.

Table 13-273 DMC_SEC_RANGE1_EDA 0x0411

Bit(s)	R/W	Default	Description
31:22	R/W	0	Not used.
21:0	R/W	0	Region 1 end address AXI address [33:12] unit 4KB.

Table 13-274 DMC_SEC_RANGE1_CTRL 0x0412

Bit(s)	R/W	Default	Description
7:5	R/W	0	Range1_secrity_level | range0 security level for DMC and DEMUX only.
4	R/W	0	Range1_prot_en | range0 allow protect monitor function. 1:allowed. 0:not allowed.
3	R/W	0	Range1_local_des_en | range0 data des enable. 1:enable. 0:disable. this bit works together with GLOBAL_DES_EN to decide this region data des enable or not.
2	R/W	0	Range1_lock | lock range 0 registers. write 1 to lock range 0 register. can't change anymore.
1	R/W	0	Range1_key_sel | range 0 data des key selection. 1:key1. 0:key0.
0	R/W	0	Range1_en | range 0 enable bit. 1:enable, 0:disable.

Table 13-275 DMC_SEC_RANGE1_RID_CTRL0 0x0413

Bit(s)	R/W	Default	Description
31:0	R/W	0	Range1_rd_sid_en[31:0]

Table 13-276 DMC_SEC_RANGE1_RID_CTRL1 0x0414

Bit(s)	R/W	Default	Description
31:0	R/W	0	Range1_rd_sid_en[63:32]

Table 13-277 DMC_SEC_RANGE1_RID_CTRL2 0x0415

Bit(s)	R/W	Default	Description
31:0	R/W	0	Range1_rd_sid_en[95:64]

Table 13-278 DMC_SEC_RANGE1_RID_CTRL3 0x0416

Bit(s)	R/W	Default	Description
31:0	R/W	0	Range1_rd_sid_en[127:96]

Table 13-279 DMC_SEC_RANGE1_RID_CTRL4 0x0417

Bit(s)	R/W	Default	Description
31:0	R/W	0	Range1_rd_sid_en[159:128]

Amlogic Proprietary and Confidential
Copyright © Amlogic. All rights reserved.

Table 13-280 DMC_SEC_RANGE1_WID_CTRL0 0x0418

Bit(s)	R/W	Default	Description
31:0	R/W	0	Range1_wr_sid_en[31:0]

Table 13-281 DMC_SEC_RANGE1_WID_CTRL1 0x0419

Bit(s)	R/W	Default	Description
31:0	R/W	0	Range1_wr_sid_en[63:32]

Table 13-282 DMC_SEC_RANGE1_WID_CTRL2 0x041a

Bit(s)	R/W	Default	Description
31:0	R/W	0	Range1_wr_sid_en[95:64]

Table 13-283 DMC_SEC_RANGE1_WID_CTRL3 0x041b

Bit(s)	R/W	Default	Description
31:0	R/W	0	Range1_wr_sid_en[127:96]

Table 13-284 DMC_SEC_RANGE1_WID_CTRL4 0x041c

Bit(s)	R/W	Default	Description
31:0	R/W	0	Range1_wr_sid_en[159:128]

Table 13-285 DMC_SEC_RANGE2_STA 0x0420

Bit(s)	R/W	Default	Description
31:22	R/W	0	Not used.
21:0	R/W	0	Region 2 start address AXI address [33:12] unit 4KB.

Table 13-286 DMC_SEC_RANGE2_EDA 0x0421

Bit(s)	R/W	Default	Description
31:22	R/W	0	Not used.
21:0	R/W	0	Region 2 end address AXI address [33:12] unit 4KB.

Table 13-287 DMC_SEC_RANGE2_CTRL 0x0422

Bit(s)	R/W	Default	Description
7:5	R/W	0	range2 security level for DMC and DEMUX only.
4	R/W	0	range2 allow protect monitor function. 1:allowed. 0:not allowed.
3	R/W	0	range2 data des enable. 1:enable. 0:disable. this bit works together with GLOBAL_DES_EN to decide this region data des enable or not.

Amlogic Proprietary and Confidential
Copyright © Amlogic. All rights reserved.

Bit(s)	R/W	Default	Description
2	R/W	0	Range2_lock. lock range 2 registers. write 1 to lock range 0 register. can't change anymore.
1	R/W	0	Range2_key_sel. range 2 data des key selection. 1:key1. 0:key0.
0	R/W	0	Range2_en. range 2 enable bit. 1:enable, 0:disable.

Table 13-288 DMC_SEC_RANGE2_RID_CTRL0 0x0423

Bit(s)	R/W	Default	Description
31:0	R/W	0	Range2_rd_sid_en[31:0]

Table 13-289 DMC_SEC_RANGE2_RID_CTRL1 0x0424

Bit(s)	R/W	Default	Description
31:0	R/W	0	Range2_rd_sid_en[63:32]

Table 13-290 DMC_SEC_RANGE2_RID_CTRL2 0x0425

Bit(s)	R/W	Default	Description
31:0	R/W	0	Range2_rd_sid_en[95:64]

Table 13-291 DMC_SEC_RANGE2_RID_CTRL3 0x0426

Bit(s)	R/W	Default	Description
31:0	R/W	0	Range2_rd_sid_en[127:96]

Table 13-292 DMC_SEC_RANGE2_RID_CTRL4 0x0427

Bit(s)	R/W	Default	Description
31:0	R/W	0	Range2_rd_sid_en[159:128]

Table 13-293 DMC_SEC_RANGE2_WID_CTRL0 0x0428

Bit(s)	R/W	Default	Description
31:0	R/W	0	Range2_wr_sid_en[31:0]

Table 13-294 DMC_SEC_RANGE2_WID_CTRL1 0x0429

Bit(s)	R/W	Default	Description
31:0	R/W	0	Range2_wr_sid_en[63:32]

Amlogic Proprietary and Confidential
Copyright © Amlogic. All rights reserved.

Table 13-295 DMC_SEC_RANGE2_WID_CTRL2 0x042a

Bit(s)	R/W	Default	Description
31:0	R/W	0	Range2_wr_sid_en[95:64]

Table 13-296 DMC_SEC_RANGE2_WID_CTRL3 0x042b

Bit(s)	R/W	Default	Description
31:0	R/W	0	Range2_wr_sid_en[127:96]

Table 13-297 DMC_SEC_RANGE2_WID_CTRL4 0x042c

Bit(s)	R/W	Default	Description
31:0	R/W	0	Range2_wr_sid_en[159:128]

Range3~14 is same as range 0, range 1 defines.

DMC_SEC_RANGE3_STA 0x0430

DMC_SEC_RANGE3_EDA 0x0431

DMC_SEC_RANGE3_CTRL 0x0432

DMC_SEC_RANGE3_RID_CTRL0 0x433

DMC_SEC_RANGE3_RID_CTRL1 0x434

DMC_SEC_RANGE3_RID_CTRL2 0x435

DMC_SEC_RANGE3_RID_CTRL3 0x436

DMC_SEC_RANGE3_RID_CTRL4 0x437

DMC_SEC_RANGE3_WID_CTRL0 0x0438

DMC_SEC_RANGE3_WID_CTRL1 0x0439

DMC_SEC_RANGE3_WID_CTRL2 0x043a

DMC_SEC_RANGE3_WID_CTRL3 0x043b

DMC_SEC_RANGE3_WID_CTRL4 0x043c

DMC_SEC_RANGE4_STA 0x0440

DMC_SEC_RANGE4_EDA 0x0441

DMC_SEC_RANGE4_CTRL 0x0442

DMC_SEC_RANGE4_RID_CTRL0 0x443

DMC_SEC_RANGE4_RID_CTRL1 0x0444

DMC_SEC_RANGE4_RID_CTRL2 0x0445

DMC_SEC_RANGE4_RID_CTRL3 0x0446

DMC_SEC_RANGE4_RID_CTRL4 0x0447

DMC_SEC_RANGE4_WID_CTRL0 0x0448

DMC_SEC_RANGE4_WID_CTRL1 0x0449

DMC_SEC_RANGE4_WID_CTRL2 0x044a

Amlogic Proprietary and Confidential
Copyright © Amlogic. All rights reserved.

DMC_SEC_RANGE4_WID_CTRL3 0x044b
DMC_SEC_RANGE4_WID_CTRL4 0x044c
DMC_SEC_RANGE5_STA 0x0450
DMC_SEC_RANGE5_EDA 0x0451
DMC_SEC_RANGE5_CTRL 0x0452
DMC_SEC_RANGE5_RID_CTRL0 0x453
DMC_SEC_RANGE5_RID_CTRL1 0x0454
DMC_SEC_RANGE5_RID_CTRL2 0x0455
DMC_SEC_RANGE5_RID_CTRL3 0x0456
DMC_SEC_RANGE5_RID_CTRL4 0x0457
DMC_SEC_RANGE5_WID_CTRL0 0x0458
DMC_SEC_RANGE5_WID_CTRL1 0x0459
DMC_SEC_RANGE5_WID_CTRL2 0x045a
DMC_SEC_RANGE5_WID_CTRL3 0x045b
DMC_SEC_RANGE5_WID_CTRL4 0x045c
DMC_SEC_RANGE6_STA 0x0460
DMC_SEC_RANGE6_EDA 0x0461
DMC_SEC_RANGE6_CTRL 0x0462
DMC_SEC_RANGE6_RID_CTRL0 0x463
DMC_SEC_RANGE6_RID_CTRL1 0x0464
DMC_SEC_RANGE6_RID_CTRL2 0x0465
DMC_SEC_RANGE6_RID_CTRL3 0x0466
DMC_SEC_RANGE6_RID_CTRL4 0x0467
DMC_SEC_RANGE6_WID_CTRL0 0x0468
DMC_SEC_RANGE6_WID_CTRL1 0x0469
DMC_SEC_RANGE6_WID_CTRL2 0x046a
DMC_SEC_RANGE6_WID_CTRL3 0x046b
DMC_SEC_RANGE6_WID_CTRL4 0x046c
DMC_SEC_RANGE7_STA 0x0470
DMC_SEC_RANGE7_EDA 0x0471
DMC_SEC_RANGE7_CTRL 0x0472
DMC_SEC_RANGE7_RID_CTRL0 0x0473
DMC_SEC_RANGE7_RID_CTRL1 0x0474
DMC_SEC_RANGE7_RID_CTRL2 0x0475
DMC_SEC_RANGE7_RID_CTRL3 0x0476
DMC_SEC_RANGE7_RID_CTRL4 0x0477
DMC_SEC_RANGE7_WID_CTRL0 0x0478
DMC_SEC_RANGE7_WID_CTRL1 0x0479

Amlogic Proprietary and Confidential
Copyright © Amlogic. All rights reserved.

DMC_SEC_RANGE7_WID_CTRL2 0x047a
DMC_SEC_RANGE7_WID_CTRL3 0x047b
DMC_SEC_RANGE7_WID_CTRL4 0x047c
DMC_SEC_RANGE8_STA 0x0480
DMC_SEC_RANGE8_EDA 0x0481
DMC_SEC_RANGE8_CTRL 0x0482
DMC_SEC_RANGE8_RID_CTRL0 0x0483
DMC_SEC_RANGE8_RID_CTRL1 0x0484
DMC_SEC_RANGE8_RID_CTRL2 0x0485
DMC_SEC_RANGE8_RID_CTRL3 0x0486
DMC_SEC_RANGE8_RID_CTRL4 0x0487
DMC_SEC_RANGE8_WID_CTRL0 0x0488
DMC_SEC_RANGE8_WID_CTRL1 0x0489
DMC_SEC_RANGE8_WID_CTRL2 0x048a
DMC_SEC_RANGE8_WID_CTRL3 0x048b
DMC_SEC_RANGE8_WID_CTRL4 0x048c
DMC_SEC_RANGE9_STA 0x0490
DMC_SEC_RANGE9_EDA 0x0491
DMC_SEC_RANGE9_CTRL 0x0492
DMC_SEC_RANGE9_RID_CTRL0 0x0493
DMC_SEC_RANGE9_RID_CTRL1 0x0494
DMC_SEC_RANGE9_RID_CTRL2 0x0495
DMC_SEC_RANGE9_RID_CTRL3 0x0496
DMC_SEC_RANGE9_RID_CTRL4 0x0497
DMC_SEC_RANGE9_WID_CTRL0 0x0498
DMC_SEC_RANGE9_WID_CTRL1 0x0499
DMC_SEC_RANGE9_WID_CTRL2 0x049a
DMC_SEC_RANGE9_WID_CTRL3 0x049b
DMC_SEC_RANGE9_WID_CTRL4 0x049c
DMC_SEC_RANGE10_STA 0x04a0
DMC_SEC_RANGE10_EDA 0x04a1
DMC_SEC_RANGE10_CTRL 0x04a2
DMC_SEC_RANGE10_RID_CTRL0 0x04a3
DMC_SEC_RANGE10_RID_CTRL1 0x04a4
DMC_SEC_RANGE10_RID_CTRL2 0x04a5
DMC_SEC_RANGE10_RID_CTRL3 0x04a6
DMC_SEC_RANGE10_RID_CTRL4 0x04a7
DMC_SEC_RANGE10_WID_CTRL0 0x04a8

Amlogic Proprietary and Confidential
Copyright © Amlogic. All rights reserved.

DMC_SEC_RANGE10_WID_CTRL1 0x04a9
DMC_SEC_RANGE10_WID_CTRL2 0x04aa
DMC_SEC_RANGE10_WID_CTRL3 0x04ab
DMC_SEC_RANGE10_WID_CTRL4 0x04ac
DMC_SEC_RANGE11_STA 0x04b0
DMC_SEC_RANGE11_EDA 0x04b1
DMC_SEC_RANGE11_CTRL 0x04b2
DMC_SEC_RANGE11_RID_CTRL0 0x04b3
DMC_SEC_RANGE11_RID_CTRL1 0x04b4
DMC_SEC_RANGE11_RID_CTRL2 0x04b5
DMC_SEC_RANGE11_RID_CTRL3 0x04b6
DMC_SEC_RANGE11_RID_CTRL4 0x04b7
DMC_SEC_RANGE11_WID_CTRL0 0x04b8
DMC_SEC_RANGE11_WID_CTRL1 0x04b9
DMC_SEC_RANGE11_WID_CTRL2 0x04ba
DMC_SEC_RANGE11_WID_CTRL3 0x04bb
DMC_SEC_RANGE11_WID_CTRL4 0x04bc
DMC_SEC_RANGE12_STA 0x04c0
DMC_SEC_RANGE12_EDA 0x04c1
DMC_SEC_RANGE12_CTRL 0x04c2
DMC_SEC_RANGE12_RID_CTRL0 0x04c3
DMC_SEC_RANGE12_RID_CTRL1 0x04c4
DMC_SEC_RANGE12_RID_CTRL2 0x04c5
DMC_SEC_RANGE12_RID_CTRL3 0x04c6
DMC_SEC_RANGE12_RID_CTRL4 0x04c7
DMC_SEC_RANGE12_WID_CTRL0 0x04c8
DMC_SEC_RANGE12_WID_CTRL1 0x04c9
DMC_SEC_RANGE12_WID_CTRL2 0x04ca
DMC_SEC_RANGE12_WID_CTRL3 0x04cb
DMC_SEC_RANGE12_WID_CTRL4 0x04cc
DMC_SEC_RANGE13_STA 0x04d0
DMC_SEC_RANGE13_EDA 0x04d1
DMC_SEC_RANGE13_CTRL 0x04d2
DMC_SEC_RANGE13_RID_CTRL0 0x04d3
DMC_SEC_RANGE13_RID_CTRL1 0x04d4
DMC_SEC_RANGE13_RID_CTRL2 0x04d5
DMC_SEC_RANGE13_RID_CTRL3 0x04d6
DMC_SEC_RANGE13_RID_CTRL4 0x04d7

Amlogic Proprietary and Confidential
Copyright © Amlogic. All rights reserved.

DMC_SEC_RANGE13_WID_CTRL0 0x04d8
DMC_SEC_RANGE13_WID_CTRL1 0x04d9
DMC_SEC_RANGE13_WID_CTRL2 0x04da
DMC_SEC_RANGE13_WID_CTRL3 0x04db
DMC_SEC_RANGE13_WID_CTRL4 0x04dc
DMC_SEC_RANGE14_STA 0x04e0
DMC_SEC_RANGE14_EDA 0x04e1
DMC_SEC_RANGE14_CTRL 0x04e2
DMC_SEC_RANGE14_RID_CTRL0 0x04e3
DMC_SEC_RANGE14_RID_CTRL1 0x04e4
DMC_SEC_RANGE14_RID_CTRL2 0x04e5
DMC_SEC_RANGE14_RID_CTRL3 0x04e6
DMC_SEC_RANGE14_RID_CTRL4 0x04e7
DMC_SEC_RANGE14_WID_CTRL0 0x04e8
DMC_SEC_RANGE14_WID_CTRL1 0x04e9
DMC_SEC_RANGE14_WID_CTRL2 0x04ea
DMC_SEC_RANGE14_WID_CTRL3 0x04eb
DMC_SEC_RANGE14_WID_CTRL4 0x04ec

Table 13-298 DMC_SEC_RANGE15_CTRL 0x04f2

Bit(s)	R/W	Default	Description
7:5	R/W	0	Range15 security level for DMC and DEMUX only.
4	R/W	0	Range15 allow protect monitor function. 1:allowed. 0:not allowed.
3	R/W	0	Range15 data des enable. 1:enable. 0:disable. this bit works together with GLOBAL_DES_EN to decide this region data des enable or not.
2	R/W	0	Range15_lock. lock range 15 registers. write 1 to lock range 0 register. can't change anymore.
1	R/W	0	Range15_key_sel. range 15 data des key selection. 1:key1. 0:key0.
0	R/W	0	Range15_en. range 15 enable bit. 1:enable, 0:disable.

Table 13-299 DMC_SEC_RANGE15_RID_CTRL0 0x04f3

Bit(s)	R/W	Default	Description
31:0	R/W	0	Range15_rd_sid_en[31:0]

Table 13-300 DMC_SEC_RANGE15_RID_CTRL1 0x04f4

Bit(s)	R/W	Default	Description
31:0	R/W	0	Range15_rd_sid_en[63:32]

Amlogic Proprietary and Confidential
Copyright © Amlogic. All rights reserved.

Table 13-301 DMC_SEC_RANGE15_RID_CTRL2 0x04f5

Bit(s)	R/W	Default	Description
31:0	R/W	0	Range15_rd_sid_en[95:64]

Table 13-302 DMC_SEC_RANGE15_RID_CTRL3 0x04f6

Bit(s)	R/W	Default	Description
31:0	R/W	0	Range15_rd_sid_en[127:96]

Table 13-303 DMC_SEC_RANGE15_RID_CTRL4 0x04f7

Bit(s)	R/W	Default	Description
31:0	R/W	0	Range15_rd_sid_en[159:128]

Table 13-304 DMC_SEC_RANGE15_WID_CTRL0 0x04f8

Bit(s)	R/W	Default	Description
31:0	R/W	0	Range15_wr_sid_en[31:0]

Table 13-305 DMC_SEC_RANGE15_WID_CTRL1 0x04f9

Bit(s)	R/W	Default	Description
31:0	R/W	0	Range15_wr_sid_en[63:32]

Table 13-306 DMC_SEC_RANGE15_WID_CTRL2 0x04fa

Bit(s)	R/W	Default	Description
31:0	R/W	0	Range15_wr_sid_en[95:64]

Table 13-307 DMC_SEC_RANGE15_WID_CTRL3 0x04fb

Bit(s)	R/W	Default	Description
31:0	R/W	0	Range15_wr_sid_en[127:96]

Table 13-308 DMC_SEC_RANGE15_WID_CTRL4 0x04fc

Bit(s)	R/W	Default	Description
31:0	R/W	0	Range15_wr_sid_en[159:128]

Table 13-309 DMC_DES_PADDING 0x0500

Bit(s)	R/W	Default	Description
31:0	R/W	0	des_pading. 32bits address padding used for DES dkey generation.

Amlogic Proprietary and Confidential
Copyright © Amlogic. All rights reserved.

Table 13-310 DMC_DES_CTRL 0x0501

Bit(s)	R/W	Default	Description
31	R/W	0	range15_des_en policy:1 range15_des_en = range15_local_des_en && GLOBAL_DES_EN. 0:range15_des_en = range15_local_des_en || GLOBAL_DES_EN.
30	R/W	0	range14_des_en policy:1 range14_des_en = range14_local_des_en && GLOBAL_DES_EN. 0:range14_des_en = range14_local_des_en || GLOBAL_DES_EN.
29	R/W	0	range13_des_en policy:1 range13_des_en = range13_local_des_en && GLOBAL_DES_EN. 0:range13_des_en = range13_local_des_en || GLOBAL_DES_EN.
28	R/W	0	range12_des_en policy:1 range12_des_en = range12_local_des_en && GLOBAL_DES_EN. 0:range12_des_en = range12_local_des_en || GLOBAL_DES_EN.
27	R/W	0	range11_des_en policy:1 range11_des_en = range11_local_des_en && GLOBAL_DES_EN. 0:range11_des_en = range11_local_des_en || GLOBAL_DES_EN.
26	R/W	0	range10_des_en policy :1 range10_des_en = range10_local_des_en && GLOBAL_DES_EN. 0 :range10_des_en = range10_local_des_en || GLOBAL_DES_EN.
25	R/W	0	range9_des_en policy:1 range9_des_en = range9_local_des_en && GLOBAL_DES_EN. 0: range9_des_en = range9_local_des_en || GLOBAL_DES_EN.
24	R/W	0	range8_des_en policy:1 range8_des_en = range8_local_des_en && GLOBAL_DES_EN. 0: range8_des_en = range8_local_des_en || GLOBAL_DES_EN.
23	R/W	0	range7_des_en policy:1 range7_des_en = range7_local_des_en && GLOBAL_DES_EN. 0: range7_des_en = range7_local_des_en || GLOBAL_DES_EN.
22	R/W	0	range6_des_en policy:1 range6_des_en = range6_local_des_en && GLOBAL_DES_EN. 0: range6_des_en = range6_local_des_en || GLOBAL_DES_EN.
21	R/W	0	range5_des_en policy:1 range5_des_en = range5_local_des_en && GLOBAL_DES_EN. 0: range5_des_en = range5_local_des_en || GLOBAL_DES_EN.
20	R/W	0	range4_des_en policy:1 range4_des_en = range4_local_des_en && GLOBAL_DES_EN. 0: range4_des_en = range4_local_des_en || GLOBAL_DES_EN.
19	R/W	0	range3_des_en policy:1 range3_des_en = range3_local_des_en && GLOBAL_DES_EN. 0: range3_des_en = range3_local_des_en || GLOBAL_DES_EN.
18	R/W	0	range2_des_en policy:1 range2_des_en = range2_local_des_en && GLOBAL_DES_EN. 0: range2_des_en = range2_local_des_en || GLOBAL_DES_EN.
17	R/W	0	range1_des_en policy:1 range1_des_en = range1_local_des_en && GLOBAL_DES_EN. 0: range1_des_en = range1_local_des_en || GLOBAL_DES_EN.
16	R/W	0	range0_des_en policy:1 range0_des_en = range0_local_des_en && GLOBAL_DES_EN. 0: range0_des_en = range0_local_des_en || GLOBAL_DES_EN.
1	R/W	0	| 0 | GLOBAL_DES_EN | 1:Global DES enable. 0:global DES disable. default is 0.
0	R/W	0	| 0 | DES_lock | one time lock bit. after write 1 to this bit, DMC_DES_CTRL, DMC_DES_PADDING can't be written or read.

Amlogic Proprietary and Confidential
Copyright © Amlogic. All rights reserved.

Table 13-311 DMC_DES_KEY0_REG0 0x0502

Bit(s)	R/W	Default	Description
31:0	R/W	0	Key0[31:0]

Table 13-312 DMC_DES_KEY0_REG1 0x0503

Bit(s)	R/W	Default	Description
31:0	R/W	0	Key0[63:32]

Table 13-313 DMC_DES_KEY0_REG2 0x0504

Bit(s)	R/W	Default	Description
31:0	R/W	0	Key0[95:64] if 128bits des_key.

Table 13-314 DMC_DES_KEY0_REG3 0x0505

Bit(s)	R/W	Default	Description
31:0	R/W	0	Key0[127:96] if 128bits des_key.

Table 13-315 DMC_DES_KEY1_REG0 0x0506

Bit(s)	R/W	Default	Description
31:0	R/W	0	Key1[31:0]

Table 13-316 DMC_DES_KEY1_REG1 0x0507

Bit(s)	R/W	Default	Description
31:0	R/W	0	Key1[63:32]

Table 13-317 DMC_DES_KEY1_REG2 0x0508

Bit(s)	R/W	Default	Description
31:0	R/W	0	Key1[95:64] if 128bits des_key.

Table 13-318 DMC_DES_KEY1_REG3 0x0509

Bit(s)	R/W	Default	Description
31:0	R/W	0	Key1[127:96] if 128bits des_key.

APB access control for DMC DRAM timing parameter and DFI interface registers.

Amlogic Proprietary and Confidential
Copyright © Amlogic. All rights reserved.

Table 13-319 DMC_APB_SEC_CTRL0 0x0510

Bit(s)	R/W	Default	Description
31:9	R/W	0	Not used.
8	R/W	0	lock bit if this bit = 1, this register is locked and cannot modified anymore.
7:0	R/W	0x5	APB access enable for each APB user ID. one ID one bit. 1: enable. 0 disable.

APB access control for DMC DRAM timing parameter and DFI interface registers.

Table 13-320 DMC_APB_SEC_CTRL1 0x0511

Bit(s)	R/W	Default	Description
31:9	R/W	0	Not used.
8	R/W	0	lock bit if this bit = 1, this register is locked and cannot modified anymore.
7:0	R/W	0x5	APB access enable for each APB user ID. one ID one bit. 1: enable. 0 disable.

APB access control for DMC PLL clock frequency control register.

Table 13-321 DMC_APB_SEC_CTRL2 0x0512

Bit(s)	R/W	Default	Description
31:9	R/W	0	Not used.
8	R/W	0	lock bit if this bit = 1, this register is locked and cannot modified anymore.
7:0	R/W	0x5	APB access enable for each APB user ID. one ID one bit. 1: enable. 0 disable.

APB access control for DMC sticky control register.

Table 13-322 DMC_APB_SEC_CTRL3 0x0513

Bit(s)	R/W	Default	Description
31:9	R/W	0	Not used.
8	R/W	0	lock bit if this bit = 1, this register is locked and cannot modified anymore.
7:0	R/W	0x5	APB access enable for each APB user ID. one ID one bit. 1: enable. 0 disable.

APB access control for DMC test control registers.

Table 13-323 DMC_APB_SEC_CTRL4 0x0514

Bit(s)	R/W	Default	Description
31:9	R/W	0	Not used.
8	R/W	0	lock bit if this bit = 1, this register is locked and cannot modified anymore.
7:0	R/W	0x5	APB access enable for each APB user ID. one ID one bit. 1: enable. 0 disable.

APB access control for DMC clk reset control registers.

Amlogic Proprietary and Confidential
Copyright © Amlogic. All rights reserved.

Table 13-324 DMC_APB_SEC_CTRL5 0x0515

Bit(s)	R/W	Default	Description
31:9	R/W	0	Not used.
8	R/W	0	lock bit if this bit = 1, this register is locked and cannot modified anymore.
7:0	R/W	0x5	APB access enable for each APB user ID. one ID one bit. 1: enable. 0 disable.

APB access control for DMC clk reset control registers.

Table 13-325 DMC_APB_SEC_CTRL6 0x0516

Bit(s)	R/W	Default	Description
31:9	R/W	0	Not used.
8	R/W	0	lock bit if this bit = 1, this register is locked and cannot modified anymore.
7:0	R/W	0x5	APB access enable for each APB user ID. one ID one bit. 1: enable. 0 disable.

APB access control for DMC normal control registers.

Table 13-326 DMC_APB_SEC_CTRL7 0x0517

Bit(s)	R/W	Default	Description
31:9	R/W	0	Not used.
8	R/W	0	lock bit if this bit = 1, this register is locked and cannot modified anymore.
7:0	R/W	0x5	APB access enable for each APB user ID. one ID one bit. 1: enable. 0 disable.

APB access control for DDR-PHY registers.

Table 13-327 DMC_APB_SEC_CTRL8 0x0518

Bit(s)	R/W	Default	Description
31:11	R/W	0	Not used.
10	R/W	0	PHY IMEM control 1: force PHY IMEM output 0. 0: normal working mode.
9	R/W	0	PHY DMEM control 1: force PHY DMEM output 0. 0: normal working mode.
8	R/W	0	lock bit if this bit = 1, this register is locked and cannot modified anymore.
7:0	R/W	0x5	APB access enable for each APB user ID. one ID one bit. 1: enable. 0 disable.

Table 13-328 DMC_SEC_STATUS 0x051a

Bit(s)	R/W	Default	Description
31:4		0	Not used.
3	R/W	0	1: security register APB write violation.(APB bus WDATA not enquire the register value when APB write). write 1 to clean this bit to 0.
2	R/W	0	Not used.
1	R/W	0	write security violation.
0	R/W		read security violation.

Amlogic Proprietary and Confidential
Copyright © Amlogic. All rights reserved.

Table 13-329 DMC_VIO_ADDR0 0x051b

Bit(s)	R/W	Default	Description
31:0	Read only	0	ddr0 write secure violation address[31:0]

Table 13-330 DMC_VIO_ADDR1 0x051c

Bit(s)	R/W	Default	Description
31:19	Read only	0	not used.
18	Read only	0	ddr0 write address secure check error.
17	Read only	0	ddr0 write address overflow or not in this DDR channel.
16:15	Read only	0	dr0 write address bit 34:33.
14:0	Read only	0	ddr0_write violation USER BIT.

Table 13-331 DMC_VIO_ADDR2 0x051b

Bit(s)	R/W	Default	Description
31:0	Read only	0	ddr0 read secure check violation address[31:0]

Table 13-332 DMC_VIO_ADDR3 0x051c

Bit(s)	R/W	Default	Description
31:19	Read only	0	not used.
18	Read only	0	ddr0 read address secure check error.
17	Read only	0	ddr0 read address overflow or not in this DDR channel.
16:15	Read only	0	ddr0 read address bit 34:33.
14:0	Read only	0	ddr0 read violation USER BIT.

DMC_AXI2DDR0 is for AXI address 0x0_0000_0000 ~ 0x0_1fff_ffff

Table 13-333 DMC_AXI2DDR0 0x0520

Bit(s)	R/W	Default	Description
31:16	R/W	0	Not used.
15:8	R/W	0	DDR base address in 256 MB units.

Amlogic Proprietary and Confidential
Copyright © Amlogic. All rights reserved.

Bit(s)	R/W	Default	Description
7:6	R/W	0	Not used.
5	R/W	0	Rank_sel. 1: rank1. 0: rank0.
4	R/W	0	Pure 16bits mode. this range is a pure 16 bits in a 16 bits only rank.
3	R/W	0	16bit mode in a 32bits bus, 1: enable. 0 not enabled.
1:0.	R/W	3	map mode. 2'b00, 2'b10: no mapped. 2'b01. this region is all mapped to this DMC channel. 2'b11. this region is mapped to both DMC in interleave mode.

DMC_AXI2DDR1 is for AXI address 0x0_2000_0000 ~ 0x0_3fff_ffff

Table 13-334 DMC_AXI2DDR1 0x0521

Bit(s)	R/W	Default	Description
31:16	R/W	0	Not used.
15:8	R/W	1	DDR base address in 256 MB units
7:6	R/W	0	Not used.
5	R/W	0	Rank_sel. 1 : rank1. 0 : rank0.
4	R/W	0	Pure 16bits mode. this range is a pure 16bits in a 16bits only rank.
3	R/W	0	16bit mode in a 32bits bus, 1: enable. 0: not enabled.
1:0.	R/W	3	map mode. 2'b00, 2'b10 : no mapped. 2'b01. this region is all mapped to this DMC channel. 2'b11. this region is mapped to both DMC in interleave mode.

DMC_AXI2DDR2 to DMC_AXI_DDR1F are similar to DMC_AXI2DDR0.

Each one is for AXI 512MB address:

DMC_AXI2DDR2 0x0522

DMC_AXI2DDR3 0x0523

DMC_AXI2DDR4 0x0524

DMC_AXI2DDR5 0x0525

DMC_AXI2DDR6 0x0526

DMC_AXI2DDR7 0x0527

DMC_AXI2DDR8 0x0528

DMC_AXI2DDR9 0x0529

DMC_AXI2DDRA 0x052A

DMC_AXI2DDRB 0x052B

DMC_AXI2DDRC 0x052C

DMC_AXI2DDRD 0x052D

DMC_AXI2DDRE 0x052E

DMC_AXI2DDRF 0x052F

DMC_AXI2DDR10 0x0530

Amlogic Proprietary and Confidential
Copyright © Amlogic. All rights reserved.

DMC_AXI2DDR11 0x0531
DMC_AXI2DDR12 0x0532
DMC_AXI2DDR13 0x0533
DMC_AXI2DDR14 0x0534
DMC_AXI2DDR15 0x0535
DMC_AXI2DDR16 0x0536
DMC_AXI2DDR17 0x0537
DMC_AXI2DDR18 0x0538
DMC_AXI2DDR19 0x0539
DMC_AXI2DDR1A 0x053A
DMC_AXI2DDR1B 0x053B
DMC_AXI2DDR1C 0x053C
DMC_AXI2DDR1D 0x053D
DMC_AXI2DDR1E 0x053E
DMC_AXI2DDR1F 0x053F

Table 13-335 DMC_DDR_CTRL 0x0540

Bit(s)	R/W	Default	Description
24:22	R/W	0	3'b000:ddr3 mode. 3'b001:ddr4 mode. 3'b010:lpddr3 mode. 3'b011:lpddr4 mode.
21.	R/W	0	rank1 enable bit. if 1, rank1 used the address map is as bit 5:3 defined.
20	R/W	0	DDR4 BG1 enable bit.
18:	R/W	0	ddrphy_16b, DDR PHY DDR SDRAM data bits width. 1:16bits. 0:32 bits.
16.	R/W	0	ddr_16b, 1:only use 16bits data in a 32bits DDR PHY data interface. 0:normal data interface.
7:4	R/W	0	ddr1_size.DDR rank1 size control. 4'b0000:DDR rank 1 is 128MB. 4'b0001:DDR rank 1 is 256MB. 4'b0010:DDR rank 1 is 512MB. 4'b0011:DDR rank 1 is 1GB. 4'b0100:DDR rank 1 is 2GB. 4'b0101:DDR rank 1 is 4GB. 4'b1000:DDR rank 1 is 192MB. 4'b1001:DDR rank 1 is 374MB. 4'b1010:DDR rank 1 is 768MB. 4'b1011: DDR rank 1 is 1.5GB. 4'b1100:DDR rank 1 is 3GB. others: reserved.
3:0	R/W	0	ddr0_size. DDR rank0 size control. 4'b0000:DDR rank 0 is 128MB. 4'b0001:DDR rank 0 is 256MB. 4'b0010:DDR rank 0 is 512MB. 4'b0011:DDR rank 0 is 1GB. 4'b0100:DDR rank 0 is 2GB. 4'b0101:DDR rank 0 is 4GB. 4'b1000:DDR rank 1 is 192MB. 4'b1001:DDR rank 1 is 374MB. 4'b1010:DDR rank 1 is 768MB. 4'b1011: DDR rank 1 is 1.5GB. 4'b1100:DDR rank 1 is 3GB. others: reserved.

Table 13-336 DMC_DDR_CTRL1 0x0541

Bit(s)	R/W	Default	Description
31:5		0	Not used.
4	R/W	0	DMC_DDR_LOCK. 1: LOCK DMC_DDR_CTRL, DMC_DDR_CTRL1, DMC_AXI2DDRx, DDR0/1_ADDRMAP_x registers. those register can't modified any more. 0: all these registers can be read/write by secure APB access.

Amlogic Proprietary and Confidential
Copyright © Amlogic. All rights reserved.

Bit(s)	R/W	Default	Description
3	R/W	0	for the split address. 1: the strip address bit == 0 to this channel. 0: the strip address bit == 1 to this channel.
2:0	R/W	0	DDR strip size. if axi2ddr configuration is split to DMC. 3'b000: 64Byte. 3'b001: 128Byte. 3'b010: 256Byte. 3'b011: 512Byte. Other: reserved for future.

Table 13-337 DMC_RANK0_ADDRMAP_0 0x0542

Bit(s)	R/W	Default	Description
29:25	R/W	0	ca8.
24:20	R/W	0	ca7.
19:15	R/W	0	ca6.
14:10	R/W	0	ca5.
9:5	R/W	0	ca4.
4:0	R/W	0	ca3.

Table 13-338 DMC_RANK0_ADDRMAP_1 0x0543

Bit(s)	R/W	Default	Description
29:25	R/W	0	ra2.
24:20	R/W	0	ra1.
19:15	R/W	0	ra0.
14:10	R/W	0	ca11.
9:5	R/W	0	ca10.
4:0	R/W	0	ca9.

Table 13-339 DMC_RANK0_ADDRMAP_2 0x0544

Bit(s)	R/W	Default	Description
29:25	R/W	0	ra8.
24:20	R/W	0	ra7.
19:15	R/W	0	ra6.
14:10	R/W	0	ra5.
9:5	R/W	0	ra4.
4:0	R/W	0	ra3.

Table 13-340 DMC_RANK0_ADDRMAP_3 0x0545

Bit(s)	R/W	Default	Description
29:25	R/W	0	ra14
24:20	R/W	0	ra13

Amlogic Proprietary and Confidential
Copyright © Amlogic. All rights reserved.

Bit(s)	R/W	Default	Description
19:15	R/W	0	ra12
14:10	R/W	0	ra11
9:5	R/W	0	ra10
4:0	R/W	0	ra9

Table 13-341 DMC_RANK0_ADDRMAP_4 0x0546

Bit(s)	R/W	Default	Description
29:25	R/W	0	ra16 for DDR4 SDRAM
24:20	R/W	0	bg1 for DDR4 SDRAM.
19:15	R/W	0	ba2. or bg0 for DDR4.
14:10	R/W	0	ba1.
9:5	R/W	0	ba0.
4:0	R/W	0	ra15.

Table 13-342 DMC_RANK1_ADDRMAP_0 0x0547

Bit(s)	R/W	Default	Description
29:25	R/W	0	ca8.
24:20	R/W	0	ca7.
19:15	R/W	0	ca6.
14:10	R/W	0	ca5.
9:5	R/W	0	ca4.
4:0	R/W	0	ca3.

Table 13-343 DMC_RANK1_ADDRMAP_1 0x0548

Bit(s)	R/W	Default	Description
29:25	R/W	0	ra2.
24:20	R/W	0	ra1.
19:15	R/W	0	ra0.
14:10	R/W	0	ca11.
9:5	R/W	0	ca10.
4:0	R/W	0	ca9.

Table 13-344 DMC_RANK1_ADDRMAP_2 0x0549

Bit(s)	R/W	Default	Description
29:25	R/W	0	ra8.
24:20	R/W	0	ra7.
19:15	R/W	0	ra6.

Amlogic Proprietary and Confidential
Copyright © Amlogic. All rights reserved.

Bit(s)	R/W	Default	Description
14:10	R/W	0	ra5.
9:5	R/W	0	ra4.
4:0	R/W	0	ra3.

Table 13-345 DMC_RANK1_ADDRMAP_3 0x054a

Bit(s)	R/W	Default	Description
29:25	R/W	0	ra14
24:20	R/W	0	ra13
19:15	R/W	0	ra12
14:10	R/W	0	ra11
9:5	R/W	0	ra10
4:0	R/W	0	ra9

Table 13-346 DMC_RANK1_ADDRMAP_4 0x054b

Bit(s)	R/W	Default	Description
29:25	R/W	0	ra16 for DDR4 SDRAM
24:20	R/W	0	bg1 for DDR4 SDRAM.
19:15	R/W	0	ba2. or bg0 for DDR4.
14:10	R/W	0	ba1.
9:5	R/W	0	ba0.
4:0	R/W	0	ra15.

Table 13-347 DMC_SEC_TEST_STA 0x0550

Bit(s)	R/W	Default	Description
31:20	R/W	0	Not used.
19:0	R/W	0	Start address reserved for DMC TEST. unit 4KB.

Table 13-348 DMC_SEC_TEST_EDA 0x0551

Bit(s)	R/W	Default	Description
31:20	R/W	0	Not used.
19:0	R/W	0	End address reserved for DMC TEST. unit 4KB.

Table 13-349 DMC_SEC_TEST_CTRL 0x0552

Bit(s)	R/W	Default	Description
7	R/W	0	lock bit. if this bit = 1, the DMC_SEC_TEST_* register can't changed.
6	R/W	0	Dmc_test_enable. 1: enable dmc_test in this address. 0: dmc_test can't be used.

Amlogic Proprietary and Confidential
Copyright © Amlogic. All rights reserved.

Bit(s)	R/W	Default	Description
5	R/W	0	1: strip position = 0 for this DMC. 0: strip position == 1 for this DMC.
4:2	R/W	0	3'h0: 64Byte strip size in interleaved mode. 3'h1: 128Byte strip size in interleaved mode. 3'h2: 256Byte strip size in interleaved mode. 3'h3: 512Byte strip size in interleaved mode. Others: reserved.
1:0	R/W	0	2'b01 this TEST address range is for this DMC only 2'b11 this TEST address range is for DMC0 and DMC0 interleaved.

13.2 eMMC/SD

13.2.1 Overview

The SoC has the following features of eMMC/SD.

- Supports SDSC/SDHC/SDXC card
- Supports eMMC and MMC card specification version 5.1 up to HS400 with data content TDES crypto
- 1 bit, 4 Bits, 8 Bits date lines supported (8 Bits only for MMC)
- Descriptor chain architecture, timing tuning and adjustment
- Supports descriptor-based internal DMA controller

This module uses eMMC/SD CONTROLLERs to connect varied SD/MMC Card, or eMMC protocol compatible memory with high throughput.

13.2.2 Pin Description

Table 13-350 Pin Description of eMMC/SD/SDIO Module

Name	Type	Description	Speed (MHz)
CLK	Output	SD eMMC clock, 0~200MHz	200
DS	DS Data strobe for eMMC HS400 mode	-	-
DAT[7:0]	SD Card 4 Bits, eMMC 8 Bits Input/Output/Push-Pull Internal pull-up for pins not used	Data, 1,4,8 mode	200
CMD	Input/Output/Push-Pull/Open-Drain Open-drain for initialization Push-pull for fast command transfer ROD is connected when in open-drain mode.	Command Response	200
Rst_n	eMMC required	Hardware reset	Low
IRQ	SD Card or eMMC not used.	Device interrupt can be replaced by DAT[1]	Low

Amlogic Proprietary and Confidential
Copyright © Amlogic. All rights reserved.

13.2.3 eMMC/SD Mode

eMMC Mode

Table 13-351 eMMC Mode

Mode Name	Data Rate	IO Voltage	Bus Width	Frequency	Max Data Transfer
Legacy MMC card	Single	3/1.8V	1, 4, 8	0-26MHz	26MB/s
High Speed SDR	Single	3/1.8V	1,4, 8	0-52MHz	52MB/s
High Speed DDR	Dual	3/1.8V	4, 8	0-52MHz	104MB/s
HS200	Single	1.8V	4, 8	0-200MHz	200MB/s

The HS200 mode offers the following features:

- SDR Data sampling method
- CLK frequency up to 200MHz Data rate – up to 200MB/s
- 4 or 8-bits bus width supported
- Single ended signaling with 4 Drive Strengths
- Signaling levels of 1.8V
- Tuning concept for Read Operations

SD Mode

Table 13-352 SD Mode

Mode Name	Data Rate	IO Voltage	Bus Width	Frequency	Max Data Transfer
Default Speed	Single	3.3V	1, 4	0-25MHz	12.5MB/s
High Speed	Single	3.3V	1, 4	0-50MHz	25MB/s
SDR12	Single	1.8V	1,4	0-25MHz	12.5MB/s
SDR25	Single	1.8V	1,4	0-50MHz	25MB/s
SDR50	Single	1.8V	1,4	0-100MHz	50MB/s
SDR104 (highest)	Single	1.8V	1,4	0-208MHz	104MB/s
DDR50	Dual	1.8V	4	0-50MHz	50MB/s

13.2.4 Descriptor

Structure

The descriptor has a size of 4x32 Bits.

Amlogic Proprietary and Confidential
Copyright © Amlogic. All rights reserved.

Table 13-353 Descriptor Structure

byte	7	6	5	4	3	2	1	0
0	length[7:0]							
1	Timeout 4 Bits				End of chain	R1b	block mode	length[8]
2	data num	resp num	resp 128	resp nocrc	Data wr	Data io	No cmd	No resp
3	owner	error	cmd index 6 Bits					
4	cmd argument 32 Bits							
5								
6								
7								
8	data address 32 Bits or data 0-4 bytes [1]Big Endian, [0]SRAM							
9								
10								
11								
12	response address 32 Bits or response irq en [0]SRAM							
13								
14								
15								

Definition

Name	Bits	Description
Length	Cmd_cfg[8:0]	same as spec, copy the content from command argument into this field, different byte size and 512 bytes, different number of blocks and infinite blocks. If the command is operating on bytes, block mode = 0, this field contains the number of bytes to read or write, A value of 0 shall cause 512 bytes to be read to written, if the command is operating on blocks, block mode = 1, this field contains the number of blocks, a value of 0 is infinite number of blocks.
Block_mode	Cmd_cfg[9]	1: the read or write shall be performed on block basis. The block size is from SD/eMMC device, and saved in APB3 register in module. 0: the read or write is byte based.
R1b	Cmd_cfg[10]	1: check the DAT0 busy after received response R1 0: do not check the DAT0 busy state.
End_of_chain	Cmd_cfg[11]	1: it is the end of descriptor chain, the host stops and issues IRQ after this descriptor is done. 0: the host reads next descriptor and continues. The command chain execution is started by write an APB3 register and stopped by the “end of chain” or clear a APB3 start register, or found one descriptor with owner is set to 0.
Timeout	Cmd_cfg[15:12]	2timeout ms when timeout != 0, max timeout 32.768s, when over the time-out limit, error bit is set, IRQ is issued. When timeout is 0, no time limit.
No_resp	Cmd_cfg[16]	1: this command doesn’t have response, used with command doesn’t have response. 0: there is a response. The module waits for response, the response time-out setting is in APB3 register.

Amlogic Proprietary and Confidential
Copyright © Amlogic. All rights reserved.

Name	Bits	Description
No_cmd	Cmd_cfg[17]	1: this descriptor doesn't have command in it, it does data DMA only, used with command to read or write SD/eMMC with data from multiple locations.
Data_io	Cmd_cfg[18]	1: there is data action in this descriptor, used with command have data process. 0: there is no data read/write action.
Data_wr	Cmd_cfg[19]	1: host writes data to SD/eMMC 0: host read data from SD/eMMC
Resp_nocrc	Cmd_cfg[20]	1: R3 response doesn't have CRC. 0: host does CRC check.
Resp_128	Cmd_cfg[21]	1: R3 response with 128 Bits information. 0: 32 Bits responses.
Resp_num	Cmd_cfg[22]	1: the resp_addr is the IRQ enable Bits, used to check the response error status, when there is an error, IRQ[14] is issued, the first 4 bytes of response is saved into resp_addr. 0: save response into SRAM or DDR location.
Data_num	Cmd_cfg[23]	1: save 4 bytes of data back into descriptor itself at bytes 8~11.
Cmd_index	Cmd_cfg[29:24]	The SD/eMMC command index. Desc REG wr: 4 reg44, 12 reg4c.
Error	Cmd_cfg[30]	Write back by host. The combined error from command, response, data, includes CRC error and timeout. When it is set the descriptor execution is stopped and an IRQ is issued. The CPU can read SD_EMMC_STATUS register to get detail information.
Owner	Cmd_cfg[31]	Programmed by CPU to 1, cleared by host to 0. 1: the descriptor is valid and owned by host, after it is done, even it has error, the owner bit is cleared, the descriptor is owned by CPU. In case of descriptor chain execution when host found a descriptor with "0" owner bit, it will stop.
Cmd_arg	Desc 4~7 bytes	32 Bits. The actual command argument some of the previous fields are copied from this command argument, the software need to make sure they are consistent. Desc REG wr: new value Data_addr: write mask, 1: change, 0: no change.
Data_addr	Desc 8~11 bytes	32 Bits. If the data_num is 0, the content is data address. If the data_num is 1, ths content is 4 data bytes. When it is an address: Data_addr[0]: 1: SRAM address, 0: DDR address. If the data_addr[31:12] matches with SD_EMMC_BASE, it is SRAM address. Data_addr[1]: 1: 4 bytes big endian, 0: little endian(default).
Resp_addr	Desc 12~15 bytes	32 Bits If the resp_num is 0, the content is resp address. If the resp_num is 1, before execution, it is the response IRQ enable Bits, after execution, it is the first 4 response bytes. When it is an address: Resp_addr[0]: 1: SRAM address, 0: DDR address. If the resp_addr[31:12] matches with SD_EMMC_BASE, it is SRAM address.

Amlogic Proprietary and Confidential
Copyright © Amlogic. All rights reserved.

13.2.5 Register Description

Each register final address = module base address+ address * 4

Where module addresses are 0xfe08c000 for port C, 0xfe08a000 for port B, and 0xfe088000 for port A.

Table 13-354 SD_EMMC_CLOCK 0x0

Bit(s)	R/W	Default	Description
30	R/W	0	Cfg_irq_sdio_sleep_ds : 1: select DS as IRQ source during sleep.
29	R/W	0	Cfg_irq_sdio_sleep: 1: enable IRQ sdio when in sleep mode. When DAT1 IRQ, the controller uses PCLK to detect DAT1 level and starts core clock, the core initials IRQ_period and detect DAT1 IRQ.
28	R/W	0	Cfg_always_on: 1: Keep clock always on 0: Clock on/off controlled by activities. Any APB3 access or descriptor execution will turn clock on. Recommended value: 0
27:22	R/W	0	Cfg_rx_delay: RX clock delay line, 6 bits 0: no delay, n: delay n*50ps Maximum delay 3150ps.
21:16	R/W	0	Cfg_tx_delay: TX clock delay line, 6 bits 0: no delay, n: delay n*50ps Maximum delay 63*50ps =3150ps.
15:14	R/W	0	Cfg_sram_pd: Sram power down
13:12			Cfg_rx_phase: RX clock phase 0: 0 phase, 1: 90 phase, 2: 180 phase, 3: 270 phase. Recommended value: 0
11:10	R/W	0	Cfg_tx_phase: TX clock phase 0: 0 phase, 1: 90 phase, 2: 180 phase, 3: 270 phase. Recommended value: 2
9:8	R/W	0	Cfg_co_phase: Core clock phase 0: 0 phase, 1: 90 phase, 2: 180 phase, 3: 270 phase. Recommended value: 2
7:6	R/W	0	Cfg_src: Clock source 0: Crystal 24MHz or other frequencies selected by clock reset test control register. 1: Fix PLL, 1000MHz Recommended value: 1
5:0	R/W	0	Cfg_div: Clock divider Frequency = clock source/cfg_div Clock off: cfg_div==0, the clock is disabled Divider bypass: cfg_div==1, clock source is used as core clock without divider Maximum divider 63.

Table 13-355 SD_EMMC_DELAY1 0x4

Bit(s)	R/W	Default	Description
31:30	R/W	0	Reserved.
29:24	R/W	0	Dly[4]: Data 4 delay line
23:18	R/W	0	Dly[3]: Data 3 delay line
17:12	R/W	0	Dly[2]: Data 2 delay line
11:6	R/W	0	Dly[1]: Data 1 delay line
5:0	R/W	0	Dly[0]: Data 0 delay line Total delay = 50ps * Dly When Dly == 0, no delay. When Dly ==63, 3150ps delay. NOTE: the 50ps is typical delay, actually delay may vary from chip to chip, from different temperature.

Amlogic Proprietary and Confidential
Copyright © Amlogic. All rights reserved.

Table 13-356 SD_EMMC_DELAY2 0x8

Bit(s)	R/W	Default	Description
31:30			Reserved.
29:24			Dly[9]: Data 9 delay line
23:18			Dly[8]: Data 8 delay line
17:12			Dly[7]: Data 7 delay line
11:6			Dly[6]: Data 6 delay line
5:0			Dly[5]: Data 5 delay line Total delay = 50ps * Dly When Dly == 0, no delay. When Dly ==63, 3150ps delay. NOTE: the 50ps is typical delay, actually delay may vary from chip to chip, from different temperature.

Table 13-357 SD_EMMC_ADJUST 0xc

Bit(s)	R/W	Default	Description
31:23			Unused
22	R/W	0	Adj_auto 1: Use cali_dut's first falling edge to adjust the timing, set cali_enable to 1 to use this function, simulation shows it can tracking 2.5ns range with 800ppm. 0: disable Working for HS200 mode, set Cali_enable to 1. Enhanced after gxlx project. Use RESP and DAT0 as reference, Separate RESP and DAT0, adjust the timing whenever there is a transition, insert a sample when there is no transition.
21:16	R/W	0	Adj_delay: Resample the input signals when clock index==adj_delay
15	R/W	0	Reserved
14	R/W	0	Cali_rise: 1: test the rising edge, recording rising edge location only. 0: test the falling edge
13	R/W	0	Adj_fixed: Adjust interface timing by resampling the input signals
12	R/W	0	Cali_enable: 1: Enable calibration 0: shut off to save power.
11:8	R/W	0	Cali_sel: Select one signal to be tested Signals are labeled from 0 to 9 the same as delay lines. Only one signal is tested at anytime. For example: Cali_sel == 9, test CMD line.

Table 13-358 SD_EMMC_CALOUT 0x10

Bit(s)	R/W	Default	Description
31:16			Unused
15:8	R		Cali_setup
7	R		Cali_vld: The reading is valid When there is no rising edge or falling edge event, the valid is low, this reading is not valid.
5:0	R		Cali_idx: The event happens at this index, The index starts from rising edge of core clock from 0, 1, 2, …

Amlogic Proprietary and Confidential
Copyright © Amlogic. All rights reserved.

Table 13-359 SD_EMMC_ADJ_IDX_LOG 0x20

Bit(s)	R/W	Default	Description
31:30			Current, Auto_adj mode, Current 6 bits adj_idx
29:24			Previous 1
23:18			Previous 2
17:12			Previous 3
11:6			Previous 4
5:0			Previous 5: Last two bits of previous 5

Table 13-360 SD_EMMC_CLKTEST_LOG 0x24

Bit(s)	R/W	Default	Description
31			Clktest_done, Test done
30:0			Clktest_times, Test clock core for 2^Clktest_exp

Table 13-361 SD_EMMC_CLKTEST_OUT 0x28

Bit(s)	R/W	Default	Description
31:0			Clktest_out, All 2^clktest_exp test results add up. Note: divided by 2^clktest_exp and get average clock core period length measured by 50ps delay cells.

Table 13-362 SD_EMMC_EYETEST_LOG 0x2c

Bit(s)	R/W	Default	Description
31			eyetest_done, Test done
30:0			eyetest_times, Test eye for 2^eyetest_exp

Table 13-363 SD_EMMC_EYETEST_OUT0 0x30

Bit(s)	R/W	Default	Description
31:0			All 2^eyetest_exp test results “OR” together.

Table 13-364 SD_EMMC_EYETEST_OUT1 0x34

Bit(s)	R/W	Default	Description
31:0			eyetest_out1, All 2^eyetest_exp test results “OR” together. Total eyeout [62:0] = {Eyetest_out1[30:0], eyetest_out0[31:0]} EYEtest output changed to 64 bits after TXLX and A113 {eyetest_out1, eyetest_out0}

Amlogic Proprietary and Confidential
Copyright © Amlogic. All rights reserved.

Table 13-365 SD_EMMC_INTF3 0x38

Bit(s)	R/W	Default	Description
26			Eyetest_sel, 0 : select core clock as eyetest clock. 1 : select DS after delay line as eyetest clock. Eyetest point is DS after delay line.
25:23			NAND_EDO, NAND Async interface EDO position after RE rising edge. [not for SD_eMMC]
22			Sd_intf3, Using SD interface 3
21:18			Ds_sht_exp, 0: DS shift setting never expires, always using the DS_sht_m as shift length. None-zero: 2^ds_sht_exp after 2^ds_sht_exp “ms”, the setting expired The internal FSM will automatically change the Ds shift setting.
17:12			Ds_sht_m, Shift DS by number of 50ps delay cells. If using auto FSM mode, it is the initial value.
11			Eyetest_on, 1: Turn on eye test After eyetest_done, set this bit to 0 to reset eyetest internal registers.
10:6			Eyetest_exp, Repeat the eye test for 2^eyetest_exp times, Or the test results together, report the final results.
5			Clktest_on_m, Manual turn on clock test
4:0			Clktest_exp, Repeat the clock test for 2^clktest_exp times. Add the clock length together, report the sum.

Table 13-366 SD_EMMC_START 0x40

Bit(s)	R/W	Default	Description
31:2	R/W	0	Desc_addr[31:2]: Descriptor address, the last 2 Bits are 0, SRAM: 4 bytes aligned, the valid address range is from 0x200~0x3ff DDR: 8 bytes aligned the valid address is anywhere in DDR, the length of chain is unlimited. Desc_addr = ADDR>>2.
1	R/W	0	Desc_busy: Start/Stop 1: Start command chain execution process. 0: Stop Write 1 to this register starts execution. Write 0 to this register stops execution.
0	R/W	0	Desc_int: SRAM/DDR 1: Read descriptor from internal SRAM, limited to 32 descriptors. 0: Read descriptor from external DDR

Table 13-367 SD_EMMC_CFG 0x44

Bit(s)	R/W	Default	Description
31:28	R/W	0	Cfg_ip_txd_adj: Data 1 interrupt, when in TXD mode, the data 1 irq is a input signal, the round trip delay is uncertain factor, change this cfg to compensate the delay.
27	R/W	0	Cfg_err_abort: 1: abort current read/write and issue IRQ 0: continue on current read/write blocks.
26	R/W	0	Cfg_irq_ds: 1: Use DS pin as SDIO IRQ input, 0: Use DAT1 pin as SDIO IRQ input.
25	R/W	0	Cfg_txd_retry: When TXD CRC error, host sends the block again. The total number of retries of one descriptor is limited to 15, after 15 retries, the TXD_err is set to high.

Amlogic Proprietary and Confidential
Copyright © Amlogic. All rights reserved.

Bit(s)	R/W	Default	Description
24	R/W	0	Cfg_txd_add_err: TXD add error test. Test feature, should not be used in normal condition. It will inverted the first CRC Bits of the 3rd block. Block index starts from 0, 1, 2, …
23	R/W	0	Cfg_auto_clk: SD/eMMC Clock Control 1: when BUS is idle and no descriptor is available, automatically turn off clock, to save power. 0:.whenever core clock is on the SD/eMMC clock is ON, it is still on/off during read data from SD/eMMC.
22	R/W	0	Cfg_stop_clk: SD/eMMC Clock Control 1: no clock for external SD/eMMC, used in voltage switch. 0: normal clock, the clock is automatically on/off during reading mode to back off reading in case of DDR slow response.
21	R/W	0	Cfg_cmd_low: Hold CMD as output Low eMMC boot mode.
20	R/W	0	Reserved
19	R/W	0	Cfg_ignore_owner: Use this descriptor even if its owner bit is “0”.
18	R/W	0	Cfg_sdclk_always_on: 1: SD/eMMC clock is always ON 0: SD/eMMC clock is controlled by host. WARNING: Set SD/eMMC clock to always ON, host may lose data when DDR is slow.
17	R/W	0	Cfg_blk_gap_ip: 1: Enable SDIO data block gap interrupt period 0: Disabled.
16	R/W	0	Cfg_out_fall: DDR mode only The command and TXD start from rising edge. Set 1 to start from falling edge.
15:12	R/W	0	Cfg_rc_cc: Wait response-command, command-command gap before next command, 2cfg_rc_cc core clock cycles.
11:8	R/W	0	Cfg_resp_timeout: Wait response till 2cfg_resp_timeout core clock cycles. Maximum 32768 core cycles.
7:4	R/W	0	Cfg_bl_len: Block length 2cfg_bl_len, because internal buffer size is limited to 512 bytes, the cfg_bl_len <=9.
3	R/W	0	Cfg_dc_ugt: 1: DDR access urgent 0: DDR access normal
2	R/W	0	Cfg_ddr: 1: DDR mode 0: SDR mode
1:0	R/W	0	Cfg_bus_width: 0: 1 bit 1: 4 Bits 2: 8 Bits 3: 2 Bits (not supported)

Table 13-368 SD_EMMC_STATUS 0x48

Bit(s)	R/W	Default	Description
31	R		Core_busy: 1: core is busy, desc_busy or sd_emmc_irq or bus_fsm is not idle. 0: core is idle.
30	R		Desc_busy: 1: Desc input process is busy, more descriptors in chain. 0: no more descriptor in chain or desc_err.
29:26	R		Bus_fsm: BUS fsm
25	R		DS: Input data strobe
24	R		CMD_i: Input response signal
23:16	R		DAT_i: Input data signals

Amlogic Proprietary and Confidential
Copyright © Amlogic. All rights reserved.

Bit(s)	R/W	Default	Description
15	R/W		IRQ_sdio: SDIO device uses DAT[1] to request IRQ
14	R/W		Resp_status: When resp_num is set to 1, the resp_addr is the response status IRQ enable Bits, if there is an error.
13	R/W		End_of_Chain: End of Chain IRQ, Normal IRQ
12	R/W		Desc_timeout: Descriptor execution time over time limit. The timeout limit is set by descriptor itself. Consider the multiple block read/write, set the proper timeout limits.
11	R/W		Resp_timeout: No response received before time limit. The timeout limit is set by cfg_resp_timeout.
10	R/W		Resp_err: Response CRC error
9	R/W		Desc_err: SD/eMMC controller doesn't own descriptor. The owner bit is "0", set cfg_ignore_owner to ignore this error.
8	R/W		Txd_err: TX data CRC error, For multiple block write, any one of blocks CRC error.
7:0	R/W		Rxd_err: RX data CRC error per wire, for multiple block read, the CRC errors are Ored together.

Table 13-369 SD_EMMC_IRQ_EN 0x4c

Bit(s)	R/W	Default	Description
31:18			unused
17			Cfg_cmd_setup, 1: improve CMD setup time by half SD_CLK cycle. 0: CMD is two cycle aligned with DATA.
16	R/W	0	Cfg_secure: Data read/write with crypto DES
15	R/W	0	en_IRQ_sdio: Enable sdio interrupt.
14	R/W	0	En_resp_status: Response status error.
13	R/W	0	en_End_of_Chain: End of Chain IRQ
12	R/W	0	en_Desc_timeout: Descriptor execution time over time limit.
11	R/W	0	en_Resp_timeout: No response received before time limit.
10	R/W	0	en_Resp_err: Response CRC error
9	R/W	0	en_Desc_err: SD/eMMC controller doesn't own descriptor.
8	R/W	0	En_txd_err: TX data CRC error
7:0	R/W	0	en_Rxd_err: RX data CRC error per wire.

Table 13-370 Descriptor_REG0 0x50

Bit(s)	R/W	Default	Description
31:0	R/W		SD_EMMC_CMD_CFG APB read wait Same as descriptor first word, resp_num = 1, response saved back into descriptor only. Read from this APB will hold APB bus

Amlogic Proprietary and Confidential
Copyright © Amlogic. All rights reserved.

Table 13-371 Descriptor_REG1 0x54

Bit(s)	R/W	Default	Description
31:0	R/W		SD_EMMC_CMD_ARG APB write start Same as descriptor second word. Write to this APB address starts execution. If the current desc is busy, it will be executed after current descriptor is done.

Table 13-372 Descriptor_REG2 0x58

Bit(s)	R/W	Default	Description
31:0	R/W		SD_EMMC_CMD_DAT : Same as descriptor third word, 32 Bits data.

Table 13-373 Descriptor_REG3 0x5c

Bit(s)	R/W	Default	Description
31:0	R/W		SD_EMMC_CMD_RSP: Write: response status IRQ enable Bits. Read: Response Bit 31:0

Table 13-374 Descriptor_REG4 0x60

Bit(s)	R/W	Default	Description
31:0	R		SD_EMMC_CMD_RSP1: Response bit 63:32

Table 13-375 Descriptor_REG5 0x64

Bit(s)	R/W	Default	Description
31:0	R		SD_EMMC_CMD_RSP2: Response bit 95:64

Table 13-376 Descriptor_REG6 0x68

Bit(s)	R/W	Default	Description
31:0	R		SD_EMMC_CMD_RSP3: Response bit 127:96

Table 13-377 Descriptor_REG7 0x6c

Bit(s)	R/W	Default	Description
31:0			Reserved

Table 13-378 Current_Next_Descriptor_REG0 0x70

Bit(s)	R/W	Default	Description
31:0	R		SD_EMMC_CURR_CFG: Current descriptor under execution.

Amlogic Proprietary and Confidential
Copyright © Amlogic. All rights reserved.

Table 13-379 Current_Next_Descriptor_REG1 0x74

Bit(s)	R/W	Default	Description
31:0	R		SD_EMMC_CURR_ARG

Table 13-380 Current_Next_Descriptor_REG2 0x78

Bit(s)	R/W	Default	Description
31:0	R		SD_EMMC_CURR_DAT

Table 13-381 Current_Next_Descriptor_REG3 0x7c

Bit(s)	R/W	Default	Description
31:0	R		SD_EMMC_CURR_RSP

Table 13-382 Current_Next_Descriptor_REG4 0x80

Bit(s)	R/W	Default	Description
31:0	R		SD_EMMC_NEXT_CFG: Next descriptor waiting for execution, already read out from SRAM or DDR, can't be changed.

Table 13-383 Current_Next_Descriptor_REG5 0x84

Bit(s)	R/W	Default	Description
31:0	R		SD_EMMC_NEXT_ARG

Table 13-384 Current_Next_Descriptor_REG6 0x88

Bit(s)	R/W	Default	Description
31:0	R		SD_EMMC_NEXT_DAT

Table 13-385 Current_Next_Descriptor_REG7 0x8c

Bit(s)	R/W	Default	Description
31:0	R		SD_EMMC_NEXT_RSP

Table 13-386 SD_EMMC_RXD 0x90

Bit(s)	R/W	Default	Description
31:25	R		Unused
24:16	R		Data_blk: Rxd Blocks received from BUS Txd blocks received from DDR.
15:10			unused
9:0	R		Data_cnt: Rxd words received from BUS. Txd words received from DDR.

Amlogic Proprietary and Confidential
Copyright © Amlogic. All rights reserved.

Table 13-387 SD_EMMC_TXD 0x94

Bit(s)	R/W	Default	Description
31:25			Unused
24:16	R		Txd_blk: Txd BUS block counter
15			unused
14:0	R		Txd_cnt: Txd BUS cycle counter

13.3 Serial Peripheral Interface Communication Controller

13.3.1 Overview

SPI Communication Controller is designed for connecting general SPI protocol compatible module. This controller allows rapid data communication with less software interrupts than conventional serial communications.

There are 5 sub-modules in spi controller, i.e. spicc_reg, spicc_dmaif, spicc_rxfifo, spicc_rxfifo, and spicc_main.

Transmitting and receiving are using different channel, that means they have different buffer.

- spicc_reg is driven by host cpu, and spicc_reg is responsible for configuring other modules.
- spicc_dmaif is responsible for dealing with DMA transfer.
- spicc_txfifo contains a transmission FIFO.
- spicc_rxfifo contains a receiving FIFO.
- spicc_main is responsible for main control of basic spi operation.

Figure 13-5 SPICC

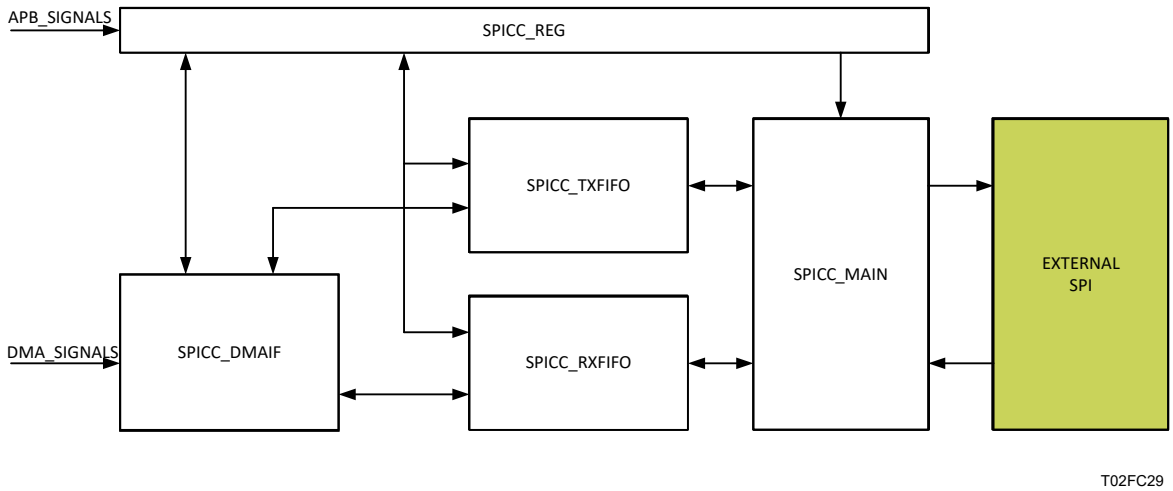

Amlogic Proprietary and Confidential
Copyright © Amlogic. All rights reserved.

Note

- spicc_reg is driven by host cpu, and spicc_reg is responsible for configuring other modules.
- spicc_dmaif is responsible for dealing with DMA operatoins.
- spicc_txfifo contains a transmission FIFO.
- spicc_rxfifo contains a receiving FIFO.
- spicc_main is responsible for main control of basic spi operation.

Here are SPI External Signals:

Table 13-388 SPI External Signals

Signal Name	I/O	Description
spicc_sclk	IO	SCLK, SPI Clock
spicc_miso	IO	MISO, Master Input Slave Output
spicc_mosi	IO	MOSI, Master Output Slave In
spicc_ss[3:0]	IO	SS, SPI chip Select, Supports up to 4 slaves.
Spicc_rdy_i	I	RDY input, Data Ready Input

And here is SPI Generic Timing:

Figure 13-6 SPI Generic Timing

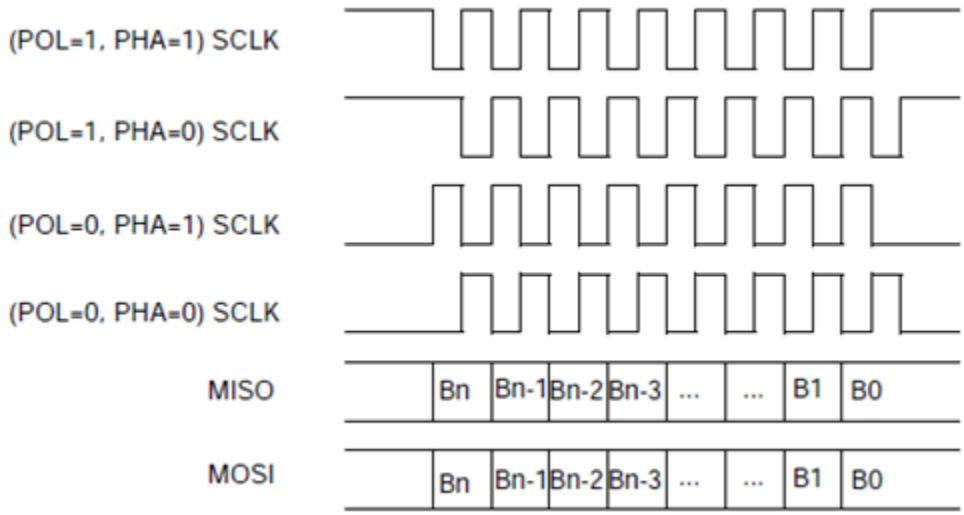

13.3.2 Features

- Full-duplex synchronous serial interface
- Master/Slave configurable
- Four chip selects to support multiple peripherals
- Transfer continuation function allows unlimited length data transfers
- 64-bit wide by 16-entry FIFO for both transmit and receive data
- Polarity and phase of the Chip Select (SS) and SPI Clock (SCLK) are configurable

Amlogic Proprietary and Confidential
Copyright © Amlogic. All rights reserved.

- Both PIO(Programming In/Out interface) and DMA(Direct Memory Access interface) supported

13.3.3 Function

The Serial Peripheral Interface Communication Controller(SPICC) module allows rapid data communication with fewer software interrupts than conventional serial communications. The SPICC module contains one 16x64 receive buffer (RXFIFO) and one 16 x 64 transmit buffer (TXFIFO).

The following are two SPICC modes of operation:

- **Master Mode:** When the SPICC module is configured as a master, it uses a serial link to transfer data between the SPICC and an external device. A chip-enable signal and a clock signal are used to transfer data between these two devices. If the external device is a transmit-only device, the SPICC master's output port can be ignored and used for other purposes. To use the internal TXFIFO and RXFIFO, two auxiliary output signals, SS and SPI_RDY, are used for data transfer rate control. The user can also program the sample period control register to a fixed data transfer rate.
- **Slave Mode:** When the SPICC module is configured as a slave, the user can configure the SPICC Control register to match the external SPI master's timing. In this configuration, SS becomes an input signal, and is used to control data transfers through the Shift register, as well as to load/store the data FIFO.

13.3.4 Register Description

There are 6 sets of SPICC registers which are SPICC0, SPICC1, ... and SPICC5. The following list shows register addresses.

- SPICC0_RXDATA 0xfe050000
- SPICC0_TXDATA 0xfe050004
- SPICC0_CONREG 0xfe050008
- SPICC0_INTREG 0xfe05000c
- SPICC0_DMAREG 0xfe050010
- SPICC0_STATREG 0xfe050014
- SPICC0_PERIODREG 0xfe050018
- SPICC0_TESTREG 0xfe05001c
- SPICC0_DRADDR 0xfe050020
- SPICC0_DWADDR 0xfe050024
- SPICC0_LD_CNTL0 0xfe050028
- SPICC0_LD_CNTL1 0xfe05002c
- SPICC0_LD_RADDR 0xfe050030
- SPICC0_LD_WADDR 0xfe050034
- SPICC0_ENHANCE_CNTL 0xfe050038
- SPICC0_ENHANCE_CNTL1 0xfe05003c
- SPICC0_ENHANCE_CNTL2 0xfe050040
- SPICC1_RXDATA 0xfe052000
- SPICC1_TXDATA 0xfe052004
- SPICC1_CONREG 0xfe052008
- SPICC1_INTREG 0xfe05200c
- SPICC1_DMAREG 0xfe052010
- SPICC1_STATREG 0xfe052014
- SPICC1_PERIODREG 0xfe052018

Amlogic Proprietary and Confidential
Copyright © Amlogic. All rights reserved.

- SPICC1_TESTREG 0xfe05201c
- SPICC1_DRADDR 0xfe052020
- SPICC1_DWADDR 0xfe052024
- SPICC1_LD_CNTL0 0xfe052028
- SPICC1_LD_CNTL1 0xfe05202c
- SPICC1_LD_RADDR 0xfe052030
- SPICC1_LD_WADDR 0xfe052034
- SPICC1_ENHANCE_CNTL 0xfe052038
- SPICC1_ENHANCE_CNTL1 0xfe05203c
- SPICC1_ENHANCE_CNTL2 0xfe052040
- SPICC2_RXDATA 0xfe054000
- SPICC2_TXDATA 0xfe054004
- SPICC2_CONREG 0xfe054008
- SPICC2_INTREG 0xfe05400c
- SPICC2_DMAREG 0xfe054010
- SPICC2_STATREG 0xfe054014
- SPICC2_PERIODREG 0xfe054018
- SPICC2_TESTREG 0xfe05401c
- SPICC2_DRADDR 0xfe054020
- SPICC2_DWADDR 0xfe054024
- SPICC2_LD_CNTL0 0xfe054028
- SPICC2_LD_CNTL1 0xfe05402c
- SPICC2_LD_RADDR 0xfe054030
- SPICC2_LD_WADDR 0xfe054034
- SPICC2_ENHANCE_CNTL 0xfe054038
- SPICC2_ENHANCE_CNTL1 0xfe05403c
- SPICC2_ENHANCE_CNTL2 0xfe054040
- SPICC3_RXDATA 0xfe04a000
- SPICC3_TXDATA 0xfe04a004
- SPICC3_CONREG 0xfe04a008
- SPICC3_INTREG 0xfe04a00c
- SPICC3_DMAREG 0xfe04a010
- SPICC3_STATREG 0xfe04a014
- SPICC3_PERIODREG 0xfe04a018
- SPICC3_TESTREG 0xfe04a01c
- SPICC3_DRADDR 0xfe04a020
- SPICC3_DWADDR 0xfe04a024
- SPICC3_LD_CNTL0 0xfe04a028
- SPICC3_LD_CNTL1 0xfe04a02c
- SPICC3_LD_RADDR 0xfe04a030
- SPICC3_LD_WADDR 0xfe04a034
- SPICC3_ENHANCE_CNTL 0xfe04a038
- SPICC3_ENHANCE_CNTL1 0xfe04a03c
- SPICC3_ENHANCE_CNTL2 0xfe04a040

Amlogic Proprietary and Confidential
Copyright © Amlogic. All rights reserved.

- SPICC4_RXDATA 0xfe04c000
- SPICC4_TXDATA 0xfe04c004
- SPICC4_CONREG 0xfe04c008
- SPICC4_INTREG 0xfe04c00c
- SPICC4_DMAREG 0xfe04c010
- SPICC4_STATREG 0xfe04c014
- SPICC4_PERIODREG 0xfe04c018
- SPICC4_TESTREG 0xfe04c01c
- SPICC4_DRADDR 0xfe04c020
- SPICC4_DWADDR 0xfe04c024
- SPICC4_LD_CNTL0 0xfe04c028
- SPICC4_LD_CNTL1 0xfe04c02c
- SPICC4_LD_RADDR 0xfe04c030
- SPICC4_LD_WADDR 0xfe04c034
- SPICC4_ENHANCE_CNTL 0xfe04c038
- SPICC4_ENHANCE_CNTL1 0xfe04c03c
- SPICC4_ENHANCE_CNTL2 0xfe04c040
- SPICC5_RXDATA 0xfe04e000
- SPICC5_TXDATA 0xfe04e004
- SPICC5_CONREG 0xfe04e008
- SPICC5_INTREG 0xfe04e00c
- SPICC5_DMAREG 0xfe04e010
- SPICC5_STATREG 0xfe04e014
- SPICC5_PERIODREG 0xfe04e018
- SPICC5_TESTREG 0xfe04e01c
- SPICC5_DRADDR 0xfe04e020
- SPICC5_DWADDR 0xfe04e024
- SPICC5_LD_CNTL0 0xfe04e028
- SPICC5_LD_CNTL1 0xfe04e02c
- SPICC5_LD_RADDR 0xfe04e030
- SPICC5_LD_WADDR 0xfe04e034
- SPICC5_ENHANCE_CNTL 0xfe04e038
- SPICC5_ENHANCE_CNTL1 0xfe04e03c
- SPICC5_ENHANCE_CNTL2 0xfe04e040

SPICC0 to SPICC5 share the same registers description, the value of "n" in the name of each register is 0~5.

Table 13-389 SPICCn_RXDATA

Bits	R/W	Defaults	Description
31:0	R	0	Rx Data

Note1: when PIO mode, programmer can get data from this register.

Amlogic Proprietary and Confidential
Copyright © Amlogic. All rights reserved.

Table 13-390 SPICCn_TXDATA

Bits	R/W	Defaults	Description
31:0	W	0	Tx Data

Note1: when PIO mode, programmer need send data to this register.

Table 13-391 SPICCn_CONREG

Bits	R/W	Defaults	Description
31:19	RW	0	[13]burst_length ([5:0]bit number of one word/package, [12:6]burst length-1)
18:16	RW	0	[3]data_rate (sclk will be divided by system clock with equation: 2^(data_rate+2), Example: if system clock = 128MHz and data_rate=2, sclk's frequency equals 8MHz)
15:14			Reserved
13:12	RW	0	[2]chip_select (00:select ss_0, 01:select ss_1, 10:select ss_2, 11:select ss_3,)
11:10			Reserved
9:8	RW	0	[2]drctl (0:ignore RDY input, 1:Data ready using pin rdy_i's failing edge, 2:Data ready using pin rdy_i's low level, 3:reserved)
7	RW	0	[1]sspol (0:SS polarity Low active,1:High active)
6	RW	0	[1]ssctl (see details in Note1)
5	RW	0	[1]pha (clock/data phase control, see section 2.2)
4	RW	0	[1]pol (clock polarity control, see section 2.2)
3	RW	0	[1]smc (start mode control, see Note2)
2	RW	0	[1]xch(exchange bit, ATTN:will automatically cleared when burst finished, see Note3)
1	RW	0	[1]mode (0:slave,1:master)
0	RW	0	[1]en (0:spicc disable,1:enable)

Note1: In one burst of master mode, if ssctl ==1, ss will output 1 between each spi transition. And if ssctl ==0, ss will output 0.

Note2: smc is for start mode control. If smc ==0, burst will start when xch is set to 1'b1; if smc==1, burst will start when txfifo is not empty.

Amlogic Proprietary and Confidential
Copyright © Amlogic. All rights reserved.

Note3: setting xch will issue a burst when smc==0, and this bit will be self cleared after burst is finished.

Table 13-392 SPICCn_INTREG

Bits	R/W	Defaults	Description
31:8			Reserved
7	RW	0	[1]tcen(transfer completed erilog enable)
5	RW	0	[1]rfen(rxfifo full erilog enable)
3	RW	0	[1]rren(rxfifo ready erilog enable)
2	RW	0	[1]tfen(txfifo full erilog enable)
0	RW	0	[1]teen(txfifo empty erilog enable)

Table 13-393 SPICCn_DMAREG

Bits	R/W	Defaults	Description
31:26	RW	0	[6]DMA Burst Number
25:20	RW	0	[6]DMA Thread ID
19	RW	0	[1]DMA Urgent
18:15	RW	0x7	[4]Number in one Write request burst(0:1,1:2…)
14:11	RW	0x7	[4]Number in one Read request burst(0:1,1:2…)
10:6	RW	0x8	[5]RxFIFO threshold(RxFIFO’s count>thres, will request write)
5:1	RW	0	[5]TxFIFO threshold(TxFIFO’s count
0	RW	0	[1]DMA Enable

Table 13-394 SPICCn_STATREG

Bits	R/W	Defaults	Description
31:8			Reserved
7	RW	0	[1]tc(transfer completed, w1c, see Note1)
5	R	0	[1]rf(rxfifo full)
3	R	0	[1]rr(rxfifo ready)

Amlogic Proprietary and Confidential
Copyright © Amlogic. All rights reserved.

Bits	R/W	Defaults	Description
2	R	0	[1]tf(txfifo full)
0	R	0	[1]te(txfifo empty)

Table 13-395 SPICCn_PERIODREG

Bits	R/W	Defaults	Description
31:15			Reserved
14:0	RW	0	[15]period(wait cycles, see Note1)

Note1: Programmer can add wait cycles through this register if transmission rate need to be controlled.

Table 13-396 SPICCn_TESTREG

Bits	R/W	Defaults	Description
31:23	RW	0	Reserved
23:22	RW	0	[2]fiforst(fifo soft reset)
21:16	RW	0x15	[6]dlyctl(delay control)
15	RW	0	[1]swap(data swap for reading rxfifo)
14	RW	0	[1]lbc(loop back control)
12:10	R	0	[3]smstatus(internal state machine status)
9:5	R	0	[5]rxcnt(internal RxFIFO counter)
4:0	R	0	[5]txcnt(internal TxFIFO counter)

Note1: Programmer can only use the TESTREG[9:0], rxcnt(internal RxFIFO counter) and txcnt(internal TxFIFO counter) , and other bits just for test.

Table 13-397 SPICCn_DRADDR

Bits	R/W	Defaults	Description
31:0	RW	0	Read Address of DMA

Table 13-398 SPICCn_DWADDR

Bits	R/W	Defaults	Description
31:0	RW	0	Write Address of DMA

Table 13-399 SPICCn_LD_CNTL0

Bits	R/W	Defaults	Description
31:9	RW	0	Reserved
8	RW	0	dma raddr/waddr load by dma_enable signal
7	RW	0	dma waddr load by vsync irq

Amlogic Proprietary and Confidential
Copyright © Amlogic. All rights reserved.

Bits	R/W	Defaults	Description
6	RW	0	dma raddr load by vsync irq
5	RW	0	dma write counter enable
4	RW	0	dma read counter enable
3	RW	0	xch enable set by vsync irq
2	RW	0	dma enable set by vsync irq
1	RW	0	Reserved
0	RW	0	Vsync irq source select

Table 13-400 SPICCn_LD_CNTL1

Bits	R/W	Defaults	Description
31:16	RW	0	dma write counter
15:0	RW	0	dma read counter

Table 13-401 SPICCn_LD_RADDR

Bits	R/W	Defaults	Description
31:0	RW	0	shadow dma read address for load

Table 13-402 SPICCn_LD_WADDR

Bits	R/W	Defaults	Description
31:0	RW	0	shadow dma write address for load

Table 13-403 SPICCn_ENHANCE_CNTL

Bits	R/W	Defaults	Description
31:30	R	0	Reserved
29	R/W	0	main clock always on
28	R/W	0	clk-cs delay enable
27	R/W	0	cs_oen enhance enable
26	R/W	0	clk_oen enhance enable
25	R/W	0	mosi_oen enhance enable
24	R/W	0	spi clk select 0: controlled by data_rate in CONREG 1: controlled by enhance_clk_div in ENHANCE_CNTL
23:16	R/W	0	enhance_clk_div
15:0	R/W	0	clk-cs delay value

Amlogic Proprietary and Confidential
Copyright © Amlogic. All rights reserved.

Table 13-404 SPICCn_ENHANCE_CNTL1

Bits	R/W	Defaults	Description
31:29	R/W	0	enhance_fclk_mosi_oen_dlyctl: mosi_oen delay control in fclk
28	R/W	0	enhance_fclk_mosi_oen_dlyctl_en: enable dlyctl
27:25	R/W	0	enhance_fclk_mosi_o_dlyctl: mosi_o delay control in fclk
24	R/W	0	enhance_fclk_mosi_o_dlyctl_en: enable dlyctl
23:21	R/W	0	enhance_fclk_miso_i_dlyctl: miso_i delay control in fclk
20	R/W	0	enhance_fclk_miso_i_dlyctl_en: enable dlyctl
19:17	R/W	0	enhance_fclk_mosi_i_dlyctl: mosi_i delay control in fclk
16	R/W	0	enhance_fclk_mosi_i_dlyctl_en: enable dlyctl
15	R/W	0	enhance_fclk_en: fclk gate enable
14	R/W	0	enhance_mosi_i_capture_en: enable, 1=select enhance capture function for mosi_i (slave mode)
9:1	R/W	0	enhance_clk_tcnt: adjust capturing timing for miso_i data (master mode). when clk_cnt=enhance_clk_tcnt, capture input data. the value of enhance_clk_tcnt must be less than the most value of clk_cnt. sclk will be divided by system clock with clk_cnt.
0	R/W	0	enhance_miso_i_capture_en: enable, 1=select enhance capture function for miso_i (master mode)

Table 13-405 SPICCn_ENHANCE_CNTL2

Bits	R/W	Defaults	Description
31	R/W	0	clk_cs_tt delay enable
30:16	R/W	0	clk_cs_tt delay value
15	R/W	0	clk_cs_ti delay enable
14:0	R/W	0	clk_cs_ti delay value

13.4 Serial Peripheral Interface Flash Controller

13.4.1 Overview

SPI Flash Controller is designed for connecting varied SPI Flash memory.

13.4.2 Features

- Support three operation modes, NOR Flash mode, Master mode, and Slave mode.
- Support read/write buffer up to 64bytes.
- Support no clock toggling during DUMMY state.
- Support hold by an external pin during a transition.
- AHB read support byte and halfword.
- Support bit-number rather than byte-number for each stage.

Amlogic Proprietary and Confidential
Copyright © Amlogic. All rights reserved.

- Support 2/4 wire writing like fast reading
- Support both rising-edge and falling-edge for SPI slave sampling and SPI master sampling.
- Support 1 wire for SPI_D and SPI_Q.
- Support SPI_CK setup and hold time by cycles
- Support 8 bit clock divider, so SPI_CK can be low as 1/256 HCLK
- Support byte-order in a word
- Support no command state, so the command is sent/received in address state by 2/4 wires.
- Support both data input and data output in a transition. SPI_DOUT->(SPI_DUMMY)->SPI_DIN

13.4.3 Register Description

Note

If the bit2 “Backward Compatible” in “SPI User Register” is 1, the registers and functions of this SPI controller are as same as Apollo SPI controller.

To use SPI Flash commands, please set the bit2 “Backward Compatible” in “SPI User Register” as “1”.

- SPI_FLASH_CMD 0xfe056000
- SPI_FLASH_ADDR 0xfe056004
- SPI_FLASH_CTRL 0xfe056008
- SPI_FLASH_CTRL1 0xfe05600c
- SPI_FLASH_STATUS 0xfe056010
- SPI_FLASH_CTRL2 0xfe056014
- SPI_FLASH_CLOCK 0xfe056018
- SPI_FLASH_USER 0xfe05601c
- SPI_FLASH_USER1 0xfe056020
- SPI_FLASH_USER2 0xfe056024
- SPI_FLASH_USER3 0xfe056028
- SPI_FLASH_USER4 0xfe05602c
- SPI_FLASH_SLAVE 0xfe056030
- SPI_FLASH_SLAVE1 0xfe056034
- SPI_FLASH_SLAVE2 0xfe056038
- SPI_FLASH_SLAVE3 0xfe05603c
- SPI_FLASH_C0 0xfe056040
- SPI_FLASH_C1 0xfe056044
- SPI_FLASH_C2 0xfe056048
- SPI_FLASH_C3 0xfe05604c
- SPI_FLASH_C4 0xfe056050
- SPI_FLASH_C5 0xfe056054
- SPI_FLASH_C6 0xfe056058
- SPI_FLASH_C7 0xfe05605c
- SPI_FLASH_B8 0xfe056060
- SPI_FLASH_B9 0xfe056064
- SPI_FLASH_B10 0xfe056068

Amlogic Proprietary and Confidential
Copyright © Amlogic. All rights reserved.

- SPI_FLASH_B11 0xfe05606c
- SPI_FLASH_B12 0xfe056070
- SPI_FLASH_B13 0xfe056074
- SPI_FLASH_B14 0xfe056078
- SPI_FLASH_B15 0xfe05607c

Table 13-406 SPI_FLASH_CMD

Bit(s)	R/W	Default	Description
31	R/W	0	READ command. 1 = read. When it becomes 0, the read command is finished. The READ command could be (0xEB, 0x6B, 0xBB, 0x3B, 0x0B, 0x03). By default is 0x0B. One read command will read erilog 32x8bits data. And saved in data cache.
30	R/W	0	WREN command. (0x06)
29	R/W	0	WRDI command. (0x04).
28	R/W	0	RDID command. (0x9f).
27	R/W	0	RDSR command. (0x05).
26	R/W	0	WRSR command. (0x01).
25	R/W	0	Page program command. (0xAD or 0x02).
24	R/W	0	SE command (0x20).
23	R/W	0	BE command (0xD8).
22	R/W	0	CE command.(0xC7).
21	R/W	0	Deep Power Down command(0xB9).
20	R/W	0	RES command. (0xAB).
19	R/W	0	HPM command.(0xA3). (Just For winbond SPI flash).
18	R/W	0	USER defined command.
17:0	R/W	0	Reserved for future.

Table 13-407 SPI_FLASH_ADDR

Bit(s)	R/W	Default	Description
31:0	R/W	0	The address[31:0] of the user command

Table 13-408 SPI_FLASH_CTRL

Bit(s)	R/W	Default	Description
31:27	R/W	0	Reserved.
26	R/W	0	Write bit order. 1 = 0, 1, 2, 3, 4, 5, 6, 7. 0 = 7, 6, 5, 4, 3, 2, 1, 0.
25	R/W	0	Read bit order. . 1 = 0, 1, 2, 3, 4, 5, 6, 7. 0 = 7, 6, 5, 4, 3, 2, 1, 0.
24	R/W	0	Fast read QIO mode.
23	R/W	0	Fast read DIO mode.
22	R/W	0	Write 2 bytes status mode. For some of winbond SPI flash, the status register is 16bits.

Amlogic Proprietary and Confidential
Copyright © Amlogic. All rights reserved.

Bit(s)	R/W	Default	Description
21	R/W	1	SPI flash WP pin value if use SPI flash WP pin as write protection.
20	R/W	0	Fast read QOUT mode.
19	R/W	1	1 = SPI share pins with SDRAM. 0 = doesn't share.
18	R/W	0	SPI hold mode. 1=SPI controller would use SPI hold function. 0 = SPI controller won't use hold function. The SPI flash hold pin can be tie high on the board. Or SPI controller can use hold pin as QIO/QOUT mode.
17	R/W	1	1 = enable AHB request. 0 = disable AHB request when you reconfigure SPI controller or running APB bus commands.
16	R/W	0	1 =enable SST SPI Flash aai command. The APB bus PP command will send AAI command.
15	R/W	1	1 = release from Deep Power-Down command is with read electronic signature.
14	R/W	0	Fast read DOUT mode.
13	R/W	1	Fast read mode. AHB bus read requirement and APB bus read command use the command 0x0Bh.
12:0	R/W	0	Reserved for future.

Table 13-409 SPI_FLASH_CTRL1

Bit(s)	R/W	Default	Description
31:28	R/W	5	SPI Clock cycles for SPI flash timing requirement tCSH.
27:16	R/W	0xfff	SPI Clock cycles for SPI flash timing requirement tRES.
15:0	R/W	0x0120	System clock cycles for SPI bus timer. In SPI share bus and SPI hold function mode. SPI bus timer used , if SPI use the bus for a limit time, SPI controller will diassert SPI hold pin to halt the SPI Flash, and give the bus control to SDRAM.

Table 13-410 SPI_FLASH_STATUS

Bit(s)	R/W	Default	Description
Bit(s)	R/W	Default	Description
31:24	R/W	0	Reserved.
23:16	R/W	0	For winbond SPI flash, this 8 bits used for DIOmode M7~M0,
15:0	R/W	0	SPI status register value. WRSR command will write this value to SPI flash status. RDSR or RES command will save the read result to this register.
When SPI controller in the slave mode, this register are the status for the SPI master to read out.			
31:0	R/W	0	In SPI Slave mode, the read status of the user command

Amlogic Proprietary and Confidential
Copyright © Amlogic. All rights reserved.

Table 13-411 SPI_FLASH_CTRL2

Bit(s)	R/W	Default	Description
31:28	R/W	0	Delay cycle number of SPI_CS input in SPI slave mode or SPI_CS output in SPI master mode 0= not delay, 1 = delayed by 1 cycle of system clock, 2 = delayed by 2 cycles of system clock , …
27:26	R/W	0	delay mode of SPI_CS input in SPI slave mode or SPI_CS output in SPI master mode 0= not latched by the edges of SPI_CK 1= latched by the falling edges of SPI_CK 2 = latched by the rising edges of SPI_CK
25:23	R/W	0	Delay cycle number of SPI Data from SPI Master to SPI Slave In SPI master mode, it is for data outputs; in SPI slave mode, it is for data inputs. 0= not delay, 1 = delayed by 1 cycle of system clock, 2 = delayed by 2 cycles of system clock , …
22:21	R/W	0	Delay mode of SPI Data from SPI Master to SPI Slave In SPI master mode, it is for data outputs; in SPI slave mode, it is for data inputs. 0= not latched by the edges of SPI_CK 1= latched by the falling edges of SPI_CK 2 = latched by the rising edges of SPI_CK
20:18	R/W	0	Delay cycle number of SPI Data from SPI Slave to SPI Master. In SPI master mode, it is for data inputs; in SPI slave mode, it is for data outputs. 0= not delay, 1 = delayed by 1 cycle of system clock, 2 = delayed by 2 cycles of system clock , …
17:16	R/W	0	Delay mode of SPI Data from SPI Slave to SPI Master. In SPI master mode, it is for data inputs; in SPI slave mode, it is for data outputs. 0= not latched by the edges of SPI_CK 1= latched by the falling edges of SPI_CK 2 = latched by the rising edges of SPI_CK
15:12	R/W	0	In SPI master mode, SPI_CK rising edge mode 4’b1000 = later by 1/4 cycle of SPI_CK 4’b1001 = later by 1/8 cycle of SPI_CK 4’b1010 = later by 1/16 cycle of SPI_CK 4’b1011 = later by 1/32 cycle of SPI_CK 4’b1100 = earlier by 1/4 cycle of SPI_CK 4’b1101 = earlier by 1/8 cycle of SPI_CK 4’b1110 = earlier by 1/16 cycle of SPI_CK 4’b1111 = earlier by 1/32 cycle of SPI_CK Others = Normal
11:8	R/W	0	In SPI master mode, SPI_CK falling edge mode 4’b1000 = later by 1/4 cycle of SPI_CK 4’b1001 = later by 1/8 cycle of SPI_CK 4’b1010 = later by 1/16 cycle of SPI_CK 4’b1011 = later by 1/32 cycle of SPI_CK 4’b1100 = earlier by 1/4 cycle of SPI_CK 4’b1101 = earlier by 1/8 cycle of SPI_CK 4’b1110 = earlier by 1/16 cycle of SPI_CK 4’b1111 = earlier by 1/32 cycle of SPI_CK Others = Normal
7:4	R/W	1	In master mode, SPI clock cycles for SPI hold timing.
3:0	R/W	1	In master mode, SPI clock sycles for SPI setup timing. SPI setup time and SPI hold time is used to configure how soon the controller can enable spi_cs_n after the controller get the bus and how long the controller still keep the bus after the spi_cs_n become to be high.

Amlogic Proprietary and Confidential
Copyright © Amlogic. All rights reserved.

Table 13-412 SPI_FLASH_CLOCK

Bit(s)	R/W	Default	Description
31	R/W	1	1=SPI clock frequency is same as system clock. 0 = SPI clock frequency will use clock divider.
30:18	R/W	0	Clock counter for Pre-scale divider: 0= not pre-scale divider, 1= pre-scale divided by 2, 2= pre-scale divided by 3, ….,
17:12	R/W	0	Clock counter for clock divider.
11:6	R/W	0	Clock high counter in SPI master mode. In SPI slave mode, it is for the delay counter for the rising edges of spi_ck_i
5:0	R/W	0	Clock low counter, in SPI master mode. In SPI slave mode, it is for the delay counter for the falling edges of spi_ck_i If the SPI clock frequcncy = sys_clock_frequency / n. Then the clock divider counter = n – 1; the clock high counter = n /2 – 1; the clock low counter = n– 1; For example, if you want to SPI clock erilog is divided by 2 of the system clock. The clock divider counter = 1, clock high counter = 0, clock low counter = 1. For SPI clock frequency = system clock / 4. The clock divider counter = 3, clock high counter = 1, clock low counter = 3.

Table 13-413 SPI_FLASH_USER

Bit(s)	R/W	Default	Description
31	R/W	1	USER command COMMAND bit. 1 = user command includes command. 0 = no command. If some SPI slaves may support 2/4 IO at the first cycle, clear this bit.
30	R/W	0	USER command ADDRESS bit. 1 = user command includes address. 0 = no address.
29	R/W	0	USER command DUMMY bit. 1= user command includes Dummy bytes.
28	R/W	0	USER command DIN bit. 1 = user command includes data in. 0 = no data in.
27	R/W	0	USER command DO bit. 1 = user command includes data output. 0 = no data output. If both DIN and DO are valid, SPI master is firstly in data output state and then in data input state. If all of DUMMY, DO and DIN are valid, SPI master is firstly in data output state and then in dummy state, finally in data input state.
26	R/W	0	USER command dummy idle bit. 1= no SPI clock toggling in dummy state. 0= normal
25	R/W	0	USER command highpart bit for SPI_DOUT stage. It is for data-output in spi master mode and for data-input in spi slave mode. 1 = only high half part of buffer are used. 0 = low half part or the whole 64bytes are used.
24	R/W	0	USER command highpart bit for SPI_DIN stage. It is for data-input in spi master mode and for data-output in spi slave mode. 1 = only high half part of buffer are used. 0 = low half part or the whole 64bytes are used.
23	R/W	0	User command external hold bit for prep. 1 = in prep state, SPI master controller can be hold by the external pin SPI_HOLD
22	R/W	0	User command external hold bit for command. 1 = in command state, SPI master controller can be hold by the external pin SPI_HOLD
21	R/W	0	User command external hold bit for address. 1 = in address state, SPI master controller can be hold by the external pin SPI_HOLD

Amlogic Proprietary and Confidential
Copyright © Amlogic. All rights reserved.

Bit(s)	R/W	Default	Description
20	R/W	0	User command external hold bit for dummy. 1 = in dummy state, SPI master controller can be hold by the external pin SPI_HOLD
19	R/W	0	User command external hold bit for data input. 1 = in data input state, SPI master controller can be hold by the external pin SPI_HOLD
18	R/W	0	User command external hold bit for data output. 1 = in data output state, SPI master controller can be hold by the external pin SPI_HOLD
17	R/W	1	User command external hold polarity bit. 1 = high is valid for hold, 0 = low is valid for hold.
16	R/W	0	Single DIO mode: Data output and input apply only 1 wire.
15	R/W	0	Fast write QIO mode.
14	R/W	0	Fast write DIO mode.
13	R/W	0	Fast write QOUT mode.
12	R/W	0	Fast write DOUT mode.
11	R/W	0	Write byte order. 0 = d[7:0], d[15:8], d[23:16], d[31:24]. 1 = d[31:24], d[23:16], d [15:8], d[7:0]
10	R/W	0	Read byte order. . 0 = d[7:0], d[15:8], d[23:16], d[31:24]. 1 = d[31:24], d[23:16], d [15:8], d[7:0]
9:8	R/W	0	AHB endian mode: 0= little-endian; 1= big-endian; 2~3 reserved
7	R/W	0	In SPI master mode, the clock output edge bit: 0 = SPI_CK is inverted, 1 = SPI_ CK is not inverted
6	R/W	1	In SPI slave mode, the clock input edge bit: 0 = SPI_CK_I is inverted, 1 = SPI_ CK_I is not inverted
5	R/W	0	SPI CS setup bit: 1 = valid in prep state
4	R/W	0	SPI CS hold bit: 1 = valid in done state
3	R/W	0	AHB-read apply the configurations of user-command, such as command value, bit-length,…
2	R/W	1	Backward Compatible: 1 = compatible to Apollo SPI This bit affect the three registers: “SPI Flash Commmand Register”, “SPI Address Register” and “SPI Control Register”
1	R/W	0	AHB-read support 4byte address, when AHB-read apply the configurations of user-command. 1 = 4byte address, 0 = 3byte address
0	R/W	0	In SPI master mode, Enable bit for Data input during SPI_DOUT stage. 1 = enable; 0 = disable This bit shall not be used in 2/4wire or SIO. When this bit is 1, during SPI_DOUT stage, data input are stored into cacheline/ buffer from address 0, i.e., Bit24 is not controlling the start address. The data output can be specified by bit25

Table 13-414 SPI_FLASH_USER1

Bit(s)	R/W	Default	Description
31:26	R/W	0	USER command bit number for address state 0 = 1 bit, 1= 2 bits, …
25:17	R/W	0	USER command bit number for data output state 0 = 1 bit, 1= 2 bits, …

Amlogic Proprietary and Confidential
Copyright © Amlogic. All rights reserved.

Bit(s)	R/W	Default	Description
16:8	R/W	0	USER command bit number for data input state 0 = 1 bit, 1= 2 bits, …
7:0	R/W	0	USER command cycle number for dummy state 0 = 1 cycle, 1= 2 cycles, …

Table 13-415 SPI_FLASH_USER2

Bit(s)	R/W	Default	Description
31:28	R/W	0	USER command bit number for command state 0 = 1 bit, 1= 2 bits, …
27:16	R/W	0	Reserved
15:0	R/W	0	The command content of the user command

Table 13-416 SPI_FLASH_USER3

Bit(s)	R/W	Default	Description
31:0	R/W	0	In SPI Master mode, the address[63:32] of the user command In SPI Slave mode, the write status of the user command

Table 13-417 SPI_FLASH_USER4

Bit(s)	R/W	Default	Description
31	R/W	0	Pin swap when it is in DIN stage and SPI data input are 4wire. This feature is for Ubec Zigbee chips. 1 = swap between {spi_q, spi_d_i} and {spi_hold_i, spi_wp_i} 0 = normal
30	R/W	0	In SPI Master mode, CS keep active after a transition. 1 = enable; 0 = disable
29	R/W	0	Idle edge of SPI_CK 0 = low when it is idle 1 = high when it is idle
28:24	R/W	0	Reserved
23	R/W	0	In the SPI slave mode, spi_cs_i polarity: 1= high voltage is active 0= low voltage is active
22:21	R/W	0	In the SPI slave mode, spi_ck_i and spi_cs_i source pins 0=SPI_CK and SPI_CS pins, respectively 1=SPI_CS2 and SPI_CS1 pins, respectively 2=SPI_HOLD and SPI_WP pins, respectively
20	R/W	0	SPI_CS2 and SPI_CS1 pin function MUX 0= spi_ck and spi_cs in the SPI master mode 1= input pads for spi_ck_i and spi_cs_i, respectively, in the SPI slave mode
19	R/W	0	SPI_CK and SPI_CS pin function MUX 0= spi_ck and spi_cs in the SPI master mode 1= input pads for spi_ck_i and spi_cs_i, respectively, in the SPI slave mode
18:17	R/W	0	SPI_HOLD and SPI_WP pin function MUX 0= normal 1= spi_q and spi_d, respectively 2= spi_cs3 and spi_cs2, repectively

Amlogic Proprietary and Confidential
Copyright © Amlogic. All rights reserved.

Bit(s)	R/W	Default	Description
			3= input pads for spi_ck_i and spi_cs_i, respectively, in the SPI slave mode
16	R/W	0	SPI_D and SPI_Q switch 1= SPI_D and SPI_Q pin-functions are swapped 0= normal
15:11	R/W	0	In Master mode, these are spi_ck MUX bit[4:0] for spi_cs4 (SPI_HOLD pin), spi_cs3 (SPI_WP pin), spi_cs2, spi_cs1 and spi_cs, respectively 1= this pin is spi_ck, if this pin is not idle 0= this pin is spi_cs, if this pin is not idle
10:6	R/W	0	In Master mode, these are polarity bit[4:0] for spi_cs4 (SPI_HOLD pin), spi_cs3 (SPI_WP pin), spi_cs2, spi_cs1 and spi_cs, respectively 1= high voltage is active 0= low voltage is active
5:0	R/W	0x1E	In Master mode, these are idle bit[5:0] for SPI_CK, for spi_cs4 (SPI_HOLD pin), spi_cs3 (SPI_WP pin), spi_cs2, spi_cs1 and spi_cs, respectively 1= idle, i.e., the spi_ck signal is 0 or the spi_cs is at the inactive level 0= active if SPI controller is working

Table 13-418 SPI_FLASH_SLAVE

Bit(s)	R/W	Default	Description
31	R/W	0	SPI controller SW reset: 1 = reset, 0 = none
30	R/W	0	SPI slave mode: 1 = slave, 0 = master
29	R/W	0	In SPI slave mode, the enable bit for the command of write-buffer-and-read-buffer 0= disable, 1=enable
28	R/W	0	In SPI slave mode, the enable bit for the command of write-status-and-read-status 0= disable, 1=enable
27	R/W	0	SPI slave command define enable 0=Apply the last 3bits of Flash commands and two extra command, please refer to In SPI slave mode, SPI-Flash-Lite Commands are supported. 1=Apply the user defined command in SPI Slave register 3
26:4	R/W	0	Reserved
11:10	R/W	0	spi_cs_i recovery mode: 0= and 1= or 2= normal 3= delayed
9:5	R/W	0	Interrupt enable for bit4:0 1= enable, 0=disable
4	R/W	0	A SPI transition is done. (whatever it is in SPI master mode or SPI slave mode)
3	R/W	0	In SPI slave mode, a status write is done
2	R/W	0	In SPI slave mode, a status read is done
1	R/W	0	In SPI slave mode, a buffer write is done
0	R/W	0	In SPI slave mode, a buffer read is done

Amlogic Proprietary and Confidential
Copyright © Amlogic. All rights reserved.

Table 13-419 SPI_FLASH_SLAVE1

Bit(s)	R/W	Default	Description
31:27	R/W	0	In SPI slave mode, status bit number 0 = 1 bit, 1= 2 bits, …
26	R/W	0	In SPI slave mode, status fast read/write enable bit: 1 = enable, 0 = disable
25	R/W	0	In SPI slave mode, status read back enable bit: 1 = reading status is written status in SPI User register 3, 0 = reading status is in SPI Status register.
24:16	R/W	0	In SPI slave mode, buffer bit number 0 = 1 bit, 1= 2 bits, …
15:10	R/W	0	In SPI slave mode, address bit number for reading buffer 0 = 1 bit, 1= 2 bits, …
9:4	R/W	0	In SPI slave mode, address bit number for writing buffer 0 = 1 bit, 1= 2 bits, …
3	R/W	0	In SPI slave mode, dummy enable bit for writing status 1=enable, 0=disable
2	R/W	0	In SPI slave mode, Dummy enable bit for reading status 1=enable, 0=disable
1	R/W	0	In SPI slave mode, Dummy enable bit for writing buffer 1=enable, 0=disable
0	R/W	0	In SPI slave mode, Dummy enable bit for reading buffer 1=enable, 0=disable

Table 13-420 SPI_FLASH_SLAVE2

Bit(s)	R/W	Default	Description
31:24	R/W	0	In SPI slave mode, Dummy cycle number for writing buffer 0 = 1 cycle, 1= 2 cycles, …
23:16	R/W	0	In SPI slave mode, Dummy cycle number for reading buffer 0 = 1 cycle, 1= 2 cycles, …
15:8	R/W	0	In SPI slave mode, Dummy cycle number for writing status 0 = 1 cycle, 1= 2 cycles, …
7:0	R/W	0	In SPI slave mode, Dummy cycle number for reading status 0 = 1 cycle, 1= 2 cycles, …

Table 13-421 SPI_FLASH_SLAVE3

Bit(s)	R/W	Default	Description
31:24	R/W	0	In SPI slave mode, Command value for writing status, when bit27 “SPI slave command define enable” in SPI Slave register is 1
23:16	R/W	0	In SPI slave mode, Command value for reading status, when bit27 “SPI slave command define enable” in SPI Slave register is 1
15:8	R/W	0	In SPI slave mode, Command value for writing buffer, when bit27 “SPI slave command define enable” in SPI Slave register is 1
7:0	R/W	0	In SPI slave mode, Command value for reading buffer, when bit27 “SPI slave command define enable” in SPI Slave register is 1

Amlogic Proprietary and Confidential
Copyright © Amlogic. All rights reserved.

Table 13-422 SPI_FLASH_C0~7

Bit(s)	R/W	Default	Description
31:0	R/W	0	Cache line Word 0~7. Cache is used to read data both for AHB or APB read command. Cache is also used for APB page programming etc.

Table 13-423 SPI_FLASH_B8~15

Bit(s)	R/W	Default	Description
31:0	R/W	0	Buffer Word 8. Buffer is used to read/write data only for APB read/write user commands.

Amlogic Proprietary and Confidential
Copyright © Amlogic. All rights reserved.

14 I/O Interface

14.1 Universal Serial Bus

14.1.1 Overview

The chip integrates one USB 2.0 port which supports USB OTG, one USB3.0 DRD port and one PCIe 2.0 (Root Complex) interface up to 5Gbps.

14.1.2 Features

The USB2.0 OTG controller features

- Support for the following speeds: High-Speed (HS, 480-Mbps),Full-Speed (FS, 12-Mbps) and Low-Speed (LS, 1.5-Mbps) modes
- Multiple DMA/non DMA mode access support on the application side
- Supports up to 16 bidirectional endpoints, including control endpoint 0.
- Supports Session Request Protocol (SRP) and Host Negotiation Protocol (HNP)
- Supports ACA ID detector

The USB2.0 Host controller features:

- Support for the following speeds: High-Speed (HS, 480-Mbps),Full-Speed (FS, 12-Mbps) and Low-Speed (LS, 1.5-Mbps) modes
- Multiple DMA/non DMA mode access support on the application side

The USB2.0 PHY features:

- Support for the following speeds: High-Speed (HS, 480-Mbps),Full-Speed (FS, 12-Mbps) and Low-Speed (LS, 1.5-Mbps) modes

The USB3.0 Host controller features:

- Support for the following speed: Super-Speed, High-Speed, Full-Speed and Low-Speed
- Compliant with the xHCI specification

The USB3.0 SS PHY features:

- 5-Gbps SuperSpeed data transmission rate over 3-m USB 3 cable
- Integrated PHY includes transmitter, receiver, spread spectrum clock (SSC) generation, PLL, digital core, and electrostatic discharge (ESD) protection circuits
- Supports legacy Half-rate mode for power-saving

14.1.3 Register Description

Base address:

PHY 20: 0xfe03c000.

PHY 21: 0xfe03e000.

For the following registers, each register’s final address= base address + offset *4.

Amlogic Proprietary and Confidential
Copyright © Amlogic. All rights reserved.

Table 14-1 reg32_00 0x00

Bit(s)	R/W	Default	Description
31:15	R/W	0	reserved
14	R/W	1	reset_FS_LS_Clock_Divider
13	R/W	1	reset_HS_CDR
12	R/W	1	reset_FS_LS_CDR
11:10	R/W	0	reg32_00_11_10_reserved
9:8	R/W	0	reserved
7	R/W	0	usb2_cal_pd
6:4	R/W	0	reserved
3	R/W	0	usb2_rx_fsls_pd
2:1	R/W	0	reserved
0	R/W	0	usb2_tx_hs_pd

Table 14-2 reg32_01 0x04

Bit(s)	R/W	Default	Description
31:24	R/W	0	TBD_3
23:16	R/W	0	TBD_2
15:10	R/W	0	TBD_1
9:2	R/W	0	tx_cfg[7:0]
1:0	R/W	0x0	reserved

Table 14-3 reg32_02 0x08

Bit(s)	R/W	Default	Description
31	RO	0	Phy_status
30	RO	0	cal_en_flag
29:27	RO	0	reg32_02_29_27_reserved
26	RO	0	HS_Disconnect_Status
25	RO	0	HS_Squelch_Status
24	RO	0	PRBS_Sync_Out
23:16	RO	0	Calibration_code_Value_23_16
15:8	RO	0	Calibration_code_Value_15_8
7:0	RO	0	Calibration_code_Value_7_0

Amlogic Proprietary and Confidential
Copyright © Amlogic. All rights reserved.

Table 14-4 reg32_03 0x0c

Bit(s)	R/W	Default	Description
31:24	R/W	0	TBD_7
23:16	R/W	0	TBD_6
15:8	R/W	0	TBD_5
7:4	R/W	0x2	TBD_4
4:2	R/W	0x1	usb2_disc_trim
2:0	R/W	0	usb2_squelch_trim

Table 14-5 reg32_04 0x10

Bit(s)	R/W	Default	Description
31:30	R/W	0	i_c2l_bias_trim_3_2
29:28	R/W	0	i_c2l_bias_trim_1_0
27	R/W	0	TEST_Bypass_mode_enable
26	RO	0	i_c2l_cal_done
25	R/W	0	i_c2l_cal_reset_n
24	R/W	0	i_c2l_cal_en
23:16	R/W	0	Calibration_code_Value_23_16
15:8	R/W	0	Calibration_code_Value_15_8
7:0	R/W	0	Calibration_code_Value_7_0

Table 14-6 reg32_05 0x14

Bit(s)	R/W	Default	Description
31:24	R/W	0	i_c2l_obs_7_0
23:22	R/W	0	reg32_05_23_22_reserved
21:20	R/W	0	i_c2l_pll_perfcfg_21_20
19	R/W	0x1	i_c2l_pll_perfcfg_19
18:16	R/W	0	i_c2l_pll_perfcfg_18_16
15:12	R/W	0	i_c2l_pll_perfcfg_15_12
11:10	R/W	0	i_c2l_pll_perfcfg_11_10
9	R/W	0x1	i_c2l_pll_perfcfg_9 (pll_reset)
8	R/W	0x1	i_c2l_pll_perfcfg_8
7:4	R/W	0x7	i_c2l_pll_perfcfg_7_4
3:2	R/W	0x3	i_c2l_pll_perfcfg_3_2
1:0	R/W	0	i_c2l_pll_perfcfg_1_0

Amlogic Proprietary and Confidential
Copyright © Amlogic. All rights reserved.

Table 14-7 reg32_06 0x18

Bit(s)	R/W	Default	Description
31	R/W	0x1	hub_extra_bit_cntr
30:24	R/W	0	cntr_timeout
23	R/W	0	Internal_loopback
22	R/W	0	reg32_06_22_reserved
21	R/W	0	PCS_Reset_Transmit_State_machine
20	R/W	0	PCS_Reset_Receive_State_machine
19:16	R/W	0xf	fsls_farend_device_disconnect_micro_second_count_11_8
15:12	R/W	0xa	reg32_06_15_12_reserved
11:8	R/W	0	bypass_disc_cntr_3_0
7:0	R/W	0x17	PCS_microsecond_timer_done_count_value_7_0

Table 14-8 reg32_07 0x1c

Bit(s)	R/W	Default	Description
31:24	RO	0	Prbs_Error_count
23:21	R/W	0	reg32_07_23_21_reserved
20:17	R/W	0xf	RX_ERROR_Turn_Around_Timer_Count
16	R/W	0	acceptable_bit_drops
15	R/W	0	host_tristate
14:12	R/W	0x4	fs_ls_minimum_count
11:8	R/W	0xf	cntr_done_value_7_4
7:4	R/W	0xf	cntr_done_value_3_0
3:0	R/W	0	HS_CDR_internal_tap_select

Table 14-9 reg32_08 0x20

Bit(s)	R/W	Default	Description
31:24	R/W	0	Custom_Pattern_2
23:16	R/W	0	Custom_Pattern_1
15:8	R/W	0x4	Custom_Pattern_0
7	R/W	0	Enable_RX_ERROR_Timeout_Mode
6	R/W	0	reset_us_timer
5	R/W	0	PRBS_ERROR_Insert
4	R/W	0	PRBS_comparison_enable
3	R/W	0	PRBS_Enable
2:0	R/W	0	pattern

Amlogic Proprietary and Confidential
Copyright © Amlogic. All rights reserved.

Table 14-10 reg32_09 0x24

Bit(s)	R/W	Default	Description
31:24	R/W	0	Custom_Pattern_6
23:16	R/W	0	Custom_Pattern_5
15:8	R/W	0	Custom_Pattern_4
7:0	R/W	0	Custom_Pattern_3

Table 14-11 reg32_10 0x28

Bit(s)	R/W	Default	Description
31:24	R/W	0	Custom_Pattern_10
23:16	R/W	0	Custom_Pattern_9
15:8	R/W	0	Custom_Pattern_8
7:0	R/W	0	Custom_Pattern_7

Table 14-12 reg32_11 0x2c

Bit(s)	R/W	Default	Description
31:24	R/W	0	Custom_Pattern_14
23:16	R/W	0	Custom_Pattern_13
15:8	R/W	0	Custom_Pattern_12
7:0	R/W	0	Custom_Pattern_11

Table 14-13 reg32_12 0x30

Bit(s)	R/W	Default	Description
31:24	R/W	0	Custom_Pattern_18
23:16	R/W	0	Custom_Pattern_17
15:8	R/W	0	Custom_Pattern_16
7:0	R/W	0	Custom_Pattern_15

Table 14-14 reg32_13 0x34

Bit(s)	R/W	Default	Description
31	R/W	0	reg32_13_31_reserved
30	R/W	0	bypass_reg[6]:i_c2l_fsls_rx_en
29	R/W	0	bypass_reg[5]:i_c2l_hs_rx_en
28	R/W	0	bypass_reg[4]:i_c2l_fs_oe
27	R/W	0	bypass_reg[3]:i_c2l_hs_oe

Amlogic Proprietary and Confidential
Copyright © Amlogic. All rights reserved.

Bit(s)	R/W	Default	Description
26	R/W	0	bypass_reg[2]:i_c2l_ls_en
25	R/W	0	bypass_reg[1]:i_c2l_fs_en
24	R/W	0	bypass_reg[0]:i_c2l_hs_en
23	R/W	0	Bypass_Host_Disconnect_Enable
22	R/W	0	Bypass_Host_Disconnect_Value
21	R/W	0	Clear_Hold_HS_disconnect
20:16	R/W	0x8	minimum_count_for_sync_detection
15	R/W	0	Update_PMA_signals
14	R/W	0	load_stat
13:8	R/W	0	reg32_13_13_8_reserved
7:0	R/W	0	Custom_Pattern_19

Table 14-15 reg32_14 0x38

Bit(s)	R/W	Default	Description
31:24	R/W	0x03	usb2_reg_cfg
23:16	R/W	0	Bypass_ctrl_15_8 bypass_ctrl[8]: bypass i_rpd_en bypass_ctrl[9]: bypass i_rpu_sw2_en bypass_ctrl[10]: i_rpu_sw1_en bypass_ctrl[11]: reserved bypass_ctrl[12]: pg_rstn bypass_ctrl[13]: pg_data_16_8 bypass_ctrl[14]: assert_se0
15:8	R/W	0	Bypass_ctrl_7_0 bypass_ctrl[0]: hs bypass_ctrl[1]: fs bypass_ctrl[2]: ls bypass_ctrl[3]:hs_out_en bypass_ctrl[4]:fsls_out_en bypass_ctrl[5]:hs_rx_en bypass_ctrl[6]:hls_rx_en
7	R/W	0	reg32_14_7_reserved
6	R/W	0	i_c2l_assert_single_enable_zero
5	R/W	0	i_c2l_data_16_8
4	R/W	0	pg_rstn
3:2	R/W	0	bypass_reg[11:10]:i_rpu_sw1_en
1	R/W	0	bypass_reg[9]:i_rpu_sw2_en
0	R/W	0	bypass_reg[8]: i_rpd_en

Table 14-16 reg32_15 0x3c

Bit(s)	R/W	Default	Description
31:29	R/W	0	reg32_15_31_29_reserved
28:16	R/W	0xfa0	ms_4_cntr
15:8	R/W	0x3c	non_se0_cntr
7:0	R/W	0x3c	se0_cntr

Amlogic Proprietary and Confidential
Copyright © Amlogic. All rights reserved.

Table 14-17 reg32_16 0x40

Bit(s)	R/W	Default	Description
31	RO	0	usb2_mppll_lock_dig
30	RO	0	usb2_mppll_lock
29	R/W	0	usb2_mppll_reset
28	R/W	0	usb2_mppll_en
27	R/W	0x1	usb2_mppll_fast_lock
26	R/W	0	usb2_mppll_lock_f
25:24	R/W	0x1	usb2_mppll_lock_long
23	R/W	0	usb2_mppll_dco_sdm_en
22	R/W	0x1	usb2_mppll_load
21	R/W	0	usb2_mppll_sdm_en
20	R/W	0	usb2_mppll_tdc_mode
19:15	R/W	0	reg32_16_19_15_reserved
14:10	R/W	0x1	usb2_mppll_n
9	R/W	0	reg32_16_9_reserved
8:0	R/W	0x14	usb2_mppll_m

Table 14-18 reg32_17 0x44

Bit(s)	R/W	Default	Description
31:28	R/W	0x9	usb2_mppll_filter_pvt1
27:24	R/W	0x2	usb2_mppll_filter_pvt2
23	R/W	0	usb2_mppll_filter_mode
22:20	R/W	0x7	usb2_mppll_lambda0
19:17	R/W	0x7	usb2_mppll_lambda1
16	R/W	0	usb2_mppll_fix_en
15:14	R/W	0	reg32_17_15_14_reserved
13:0	R/W	0	usb2_mppll_frac_in

Table 14-19 reg32_18 0x48

Bit(s)	R/W	Default	Description
31	R/W	0	usb2_mppll_acg_range
30:29	R/W	0x3	usb2_mppll_adj_ldo
28:26	R/W	0x3	usb2_mppll_alpha
25:24	R/W	0x1	usb2_mppll_bb_mode
23:22	R/W	0x1	usb2_mppll_bias_adj

Amlogic Proprietary and Confidential
Copyright © Amlogic. All rights reserved.

Bit(s)	R/W	Default	Description
21:19	R/W	0x3	usb2_mppll_data_sel
18:16	R/W	0x3	usb2_mppll_rou
15:14	R/W	0	usb2_mppll_pfd_gain
13	R/W	0x1	usb2_mppll_dco_clk_sel
12	R/W	0	usb2_mppll_dco_m_en
11:6	R/W	0x27	usb2_mppll_lk_s
5:2	R/W	0x9	usb2_mppll_lk_w
1:0	R/W	0x1	usb2_mppll_lkw_sel

Table 14-20 reg32_19 0x4c

Bit(s)	R/W	Default	Description
31	RO	0	usb2_mppll_lock_dig
30	RO	0	usb2_mppll_lock
29:10	RO	0	reg32_19_29_10_reserved
9:0	RO	0	usb2_mppll_reg_out

Table 14-21 reg32_20 0x50

Bit(s)	R/W	Default	Description
31	R/W	0	bypass_cal_done_r5
30:29	R/W	0	usb2_bgr_dbg_1_0
28:24	R/W	0	usb2_bgr_vref_4_0
23:22	R/W	0	squelch_sel: 01: debounce 1; 10: debounce 2; 00/11: no debounce
21	R/W	0	usb2_bgr_start
20:16	R/W	0	usb2_bgr_adj_4_0
15:14	R/W	0	usb2_edgedrv_trim_1_0
13	R/W	0	usb2_edgedrv_en
12:9	R/W	0xf	usb2_dmon_sel_3_0
8	R/W	0	usb2_dmon_en
7	R/W	0	bypass_otg_det
6	R/W	0	usb2_cal_code_r5
5	R/W	0	usb2_amon_en
4	R/W	0x0	usb2_otg_vbusdet_en
3:1	R/W	0x4	usb2_otg_vbus_trim_2_0
0	R/W	0	usb2_otg_iddet_en

Amlogic Proprietary and Confidential
Copyright © Amlogic. All rights reserved.

Table 14-22 reg32_21 0x54

Bit(s)	R/W	Default	Description
31:26	R/W	0	bypass_chirp_reg [30]: bypass hs chirpK reg [31]: bypass hs term_sel reg
29:28	R/W	0	bypass_chirp_ctrl [28]: bypass hs chirpK [29]: bypass hs term_sel
27:26	R/W		reg32_21_27_26_reserved
25:20	R/W	0	bypass_utmi_reg [21:20]: xcvr_select ctrl reg [22]: term_select ctrl reg [23]: suspend ctrl reg [25:24]: opmode ctrl reg
19:16	R/W	0	bypass_utmi_cntr [16]: bypass xcvr_select [17]: bypass term_select [18]: bypass suspend [19]: bypass opmode
15:8	R/W	0	hs cdr ctrl
7	R/W		hs cdr sel
6	R/W		reg32_21_6_reserved
5:4	R/W	0x2	usb2_otg_aca_trim_1_0
3	R/W	0	usb2_tx_strg_pd
2	R/W	0x0	usb2_otg_aca_en
1	R/W	0x1	usb2_cal_ack_en
0	R/W	0	usb2_bgr_force

Table 14-23 reg32_22 0x58

Bit(s)	R/W	Default	Description
31:14	RO	0	reg32_22_31_14_reserved
[13:6]			hs cdr state
5:3	RO	0	usb2_otg_aca_iddig
2	RO	0	usb2_otg_vbus_vld
1	RO	0	usb2_otg_sess_vld
0	RO	0	usb2_otg_id_dig

Table 14-24 reg32_23 0x5c

Bit(s)	R/W	Default	Description
31:16	RO	0	test_bus_data_int_15_0
15:13		0	ldo_trim
12		1	ldo_en
11		0	new_hs_disc_ctrl[1]
10		0	new_hs_disc_ctrl[0]
9		0	sel_cdr
8		0	pcs_sel
7	R/W	0	orw_test_bus_en

Amlogic Proprietary and Confidential
Copyright © Amlogic. All rights reserved.

Bit(s)	R/W	Default	Description
6:1	R/W	0	orw_test_bus_sel_5_0
0	R/W	0	orw_usb2_bgr_en

14.2 PCIE

PCIE module includes PCIE controller and PCIE PHY.

14.3 Ethernet

14.3.1 Overview

The Ethernet MAC controller provides a complete ethernet interface from the chip to a Reduced Gigabit Media Independent Interface(RGMII) compliant Ethernet PHY.

14.3.2 Ethernet Top Registers

Base address: 0xfe024000

Table 14-25 ETHTOP_CNTL0 0x140

Bit(s)	R/W	Default	Description
31	R/W	0	eth_urgent 1: set AHB to DDR interface as urgent
30	R/W	0	clock source select for rgmii_tx_clk 1: use rx_clk as tx_clk
29:27	R/W	0	cali_sel RMII & RGMII mode Select one signal from {RXDV, RXD3:0} to calibrate.
26	R/W	0	cali_rise RMII & RGMII mode 0: test falling edge 1: test rising edge
25	R/W	0	cali_start RMII & RGMII mode Start calibration logic
24:20	R/W	0	adj_skew RMII & RGMII mode 5 bits correspondent to {RXDV, RXD3:0}, set to 1 will delay the data capture by 1 cycle(fast clock).
19:15	R/W	0	adj_delay Set bit14 to 0. RMII & RGMII mode Capture input data at clock index equal to adj_delay.
14	R/W	0	adj_setup Set RXDV and RXD setup time, data is aligned with index 0. When set to 1, auto delay and skew
13	R/W	0	adj_enable RMII & RGMII mode Enable data delay adjustment and calibration logic.
12	R/W	0	clk_en

Amlogic Proprietary and Confidential
Copyright © Amlogic. All rights reserved.

Bit(s)	R/W	Default	Description
			RMII & RGMII mode Enable TX_CLK and PHY_REF_CLK generator.
11	R/W	0	clk_rmii_i_invert RMII mode Use inverted internal clk_rmii_i to generate 25/2.5 tx_rx_clk.
9:7	R/W	0	rgmii_tx_clk_ratio RMII & RGMII mode, 000: invalid value. 001: clk_m250 is 250MHz. 010: clk_m250 is 500MHz. 100: clk_m250 is 1000MHz. clk_m250 is “ratio” *250MHz.
6:5	R/W	0	rgmii_tx_clk phase select RGMII mode, TX_CLK related to TXD 00: clock delay 0 cycle. 01: clock delay ¼ cycle. 10: clock delay ½ cycle. 11: clock delay ¾ cycle.
4	R/W	0	clock source select for rgmii_tx_clk 0: clk_m250_src0(fclk_div2) 1: clk_m250_src1(fclk_div4)
3	R/W	0	invert control for rx_clk_or_clk_rmii_i RMII mode CLK_RMII RGMII mode RX_CLK Use inverted signal when set to 1.
2:0	R/W	0	PHY Interface Select Function: These pins select one of the multiple PHY interfaces of MAC. This is sampled only during reset assertion and ignored after that. 3’b001: RGMII 3’b100: RMII 3’b000: MII

Table 14-26 ETHTOP_CNTL1 0x144

Bit(s)	R/W	Default	Description
25:21	R/W	0	cfg_txclk_dly Add delay to input TX_CLK for better timing
20:16	R/W	0	cfg_rxclk_dly Add delay to input RX_CLK for better timing
15	R		cali_vld the result is valid
14	R		cali_rise The results is rising edge test or falling edge test.
13:11	R		cali_sel The signal under test.
10	R		cali_act The Calibration logic is waiting for event.
9:5	R		cali_len The RX_CLK length in 1ns.
4:0	R		cali_idx Signal switch position in 1ns.

Amlogic Proprietary and Confidential
Copyright © Amlogic. All rights reserved.

Table 14-27 ETHTOP_CNTL2 0x158

Bit(s)	R/W	Default	Description
31:3	R/W	0	reserved
2	R/W	0	pwr_isolate_i
1	R/W	0	pwr_clamp_ctrl_i
0	R/W	0	pwr_down_ctrl_i

Table 14-28 ETHTOP_CNTL3 0x15c

Bit(s)	R/W	Default	Description
31:0	R/W	0	reserved

Table 14-29 ETHTOP_STS0 0x160

Bit(s)	R/W	Default	Description
31:0	R	0	ptp_timestamp_o31:0

Table 14-30 ETHTOP_STS1 0x164

Bit(s)	R/W	Default	Description
31:0	R	0	ptp_timestamp_o63:32

Table 14-31 ETHTOP_STS2 0x168

Bit(s)	R/W	Default	Description
31:5	R	0	reserved
4	R	0	sbd_pwr_down_ack_o
3	R	0	sbd_tx_clk_gating_ctrl_o LPI Tx clock gating control, high after MAC enter the Tx LPI mode
2:0	R	0	mdc_chid_o current transfer DMA channel ID

14.3.3 Ethernet MAC

14.3.3.1 Features

Ethernet MAC has the following features:

- 10/100/1000 MAC 5.10a
- RGMII/RMII
- AHB 32 Bits internal bus
- RX FIFO 8KB, TX FIFO 8KB
- 2 MAC addresses
- EEE

Amlogic Proprietary and Confidential
Copyright © Amlogic. All rights reserved.

- Power Management

14.3.4 Ethernet PHY

14.3.4.1 Features

Ethernet PHY has the following features:

- Integrated IEEE 802.3/802.3u compliant 10/100Mbps Ethernet PHY
- Supporting both full and half-duplex for either 10 or 100 Mb/s data rate
- Auto MDIX capable
- Supports wake-on-LAN
- 100 Base-T support
- MII/RMII/SMII interface
- Supports auto-negotiation
- Full set of power down modes
- Interface available to 100Base-FX Fiber-PMD
- Serial Management Interface (SMI)
- Fix configurations for LED status indicators
- Supporting military temperature range -20℃ to 80℃
- Perfect mix of analog and digital lends itself to robustness, portability, and performance
- Multiple input clock options
- Stand-alone core

14.3.4.2 Register Description

Base Address: 0xfe028000

Table 14-32 ETH_PHY_DBG_CTL0 0x0

Bit(s)	R/W	Default	Description
7:0	R/W	0	ETH digital debug registers

Table 14-33 ETH_PHY_DBG_CTL1 0x4

Bit(s)	R/W	Default	Description
23:0	R/W	0	ETH digital debug registers

Table 14-34 ETH_PHY_DBG_CFG0 0x8

Bit(s)	R/W	Default	Description
31:0	R/W	0	ETH digital debug registers

Table 14-35 ETH_PHY_DBG_CFG1 0xc

Bit(s)	R/W	Default	Description
31:0	R/W	0	ETH digital debug registers

Amlogic Proprietary and Confidential
Copyright © Amlogic. All rights reserved.

Table 14-36 ETH_PHY_DBG_CFG2 0x10

Bit(s)	R/W	Default	Description
31:0	R/W	0	ETH digital debug registers

Table 14-37 ETH_PHY_DBG_CFG3 0x14

Bit(s)	R/W	Default	Description
31:0	R/W	0	ETH digital debug registers

Table 14-38 ETH_PHY_DBG_CFG4 0x18

Bit(s)	R/W	Default	Description
31:0	R/W	0	ETH digital debug registers

Table 14-39 ETH_PLL_STS 0x40

Bit(s)	R/W	Default	Description
31	R		eth_mppll_lock
30	R		eth_mppll_lock_dig
29:10	R		reserved
9:0	R		eth_mppll_reg_out

Table 14-40 ETH_PLL_CTL0 0x44

Bit(s)	R/W	Default	Description
31	R		eth_mppll_lock
30	R		eth_mppll_lock_dig
29	R/W		eth_mppll_reset
28	R/W		eth_mppll_en
27	R/W		eth_mppll_fast_lock
26	R/W		eth_mppll_lock_f
25:24	R/W		eth_mppll_lock_long
23	R/W		eth_mppll_sel_ref
22	R/W		eth_mppll_load
21	R/W		eth_mppll_sdm_en
20	R/W		eth_mppll_tdc_mode
19:15	R/W		reserved
14:10	R/W		eth_mppll_n
9	R/W		reserved
8:0	R/W		eth_mppll_m

Amlogic Proprietary and Confidential
Copyright © Amlogic. All rights reserved.

Table 14-41 ETH_PLL_CTL1 0x48

Bit(s)	R/W	Default	Description
31:28	R/W		eth_mppll_filter_pvt1
27:24	R/W		eth_mppll_filter_pvt2
23	R/W		eth_mppll_filter_mode
22:20	R/W		eth_mppll_lambda0
19:17	R/W		eth_mppll_lambda1
16	R/W		eth_mppll_fix_en
15:14	R/W		reserved
13:0	R/W		eth_mppll_frac_in

Table 14-42 ETH_PLL_CTL2 0x4C

Bit(s)	R/W	Default	Description
31	R/W		eth_mppll_acq_range
30:29	R/W		eth_mppll_adj_ldo
28:26	R/W		eth_mppll_alpha
25:24	R/W		eth_mppll_bb_mode
23:22	R/W		eth_mppll_bias_adj
21:19	R/W		eth_mppll_data_sel
18:16	R/W		eth_mppll_rou
15:14	R/W		eth_mppll_pfd_gain
13	R/W		eth_mppll_dco_clk_sel
12	R/W		eth_mppll_dco_m_en
11:6	R/W		eth_mppll_lk_s
5:2	R/W		eth_mppll_lk_w
1:0	R/W		eth_mppll_lkw_sel

Table 14-43 ETH_PLL_CTL3 0x50

Bit(s)	R/W	Default	Description
31:1	R		reserved
0	R/W		eth_mppll_dco_sdm_en

Table 14-44 ETH_PLL_CTL4 0x54

Bit(s)	R/W	Default	Description
31:0	R/W		reserved

Amlogic Proprietary and Confidential
Copyright © Amlogic. All rights reserved.

Table 14-45 ETH_PLL_CTL4 0x54

Bit(s)	R/W	Default	Description
31:1	R/W		reserved
0	R/W	0	led_cfg_1

Table 14-46 ETH_PLL_CTL5 0x58

Bit(s)	R/W	Default	Description
31:16	R/W	0	ETH_PHY_RXADC0
15:3	R/W	0	ETH_PHY_CTLIO
2:0	R/W	0	reserved

Table 14-47 ETH_PLL_CTL6 0x5C

Bit(s)	R/W	Default	Description
31:16	R/W	0	reserved
15:0	R/W	0	ETH_PHY_RXSQLD

Table 14-48 ETH_PLL_CTL7 0x60

Bit(s)	R/W	Default	Description
31:16	R/W	0	reserved
15:0	R/W	0	ETH_PHY_RXADC1

Table 14-49 ETH_PHY_CNTL0 0x80

Bit(s)	R/W	Default	Description
31:16	R/W	0	co_reg3_oui_in, SMI register 3 default value
15:0	R/W	0	co_reg2_oui_in, SMI register 2 default value

Table 14-50 ETH_PHY_CNTL1 0x84

Bit(s)	R/W	Default	Description
31:24	R/W	0	{led_cfg_1,led_cfg7:5}: co_activity_led output select 0: link_led & (~activity) 1: link_led 2: link_led & activity 3: link_led | activity 4: activity 5: rx_led 6: tx_led 7: duplex_led 8: link_led | (~activity) led_cfg4:2: co_link_speed_led output select 0: speed100_led 1: activity & speed100_led 2: link_led & speed100_led 3: link_led & activity & speed100_led 4: speed10_led 5: activity & speed10_led 6: link_led & speed10_led 7: link_led & activity & speed10_led led_cfg1: invert co_link_ speed_led when output to gpio led_cfg0: invert all led signal from phy
23	R/W	0	invert co_activity_led invert co_activity_led when output to gpio
22	R/W	0	co_pwruprst_byp

Amlogic Proprietary and Confidential
Copyright © Amlogic. All rights reserved.

Bit(s)	R/W	Default	Description
21	R/W	0	co_clk_ext
20	R/W	0	co_st_scan
19	R/W	0	co_rxclk_inv
18	R/W	0	co_phy_enb
17	R/W	0	co_clkfreq
16	R/W	0	eth_clk_enable
15:14	R/W	0	co_st_miimode1:0
13	R/W	0	co_smii_source_sync
12	R/W	0	co_st_pllbp
11	R/W	0	co_st_adcbp
10	R/W	0	co_st_fxmode
9	R/W	0	co_en_high
8	R/W	0	co_automdix_en
7:3	R/W	0	co_st_phyadd4:0
2:0	R/W	0	co_st_mode2:0

Table 14-51 ETH_PHY_CNTL2 0x88

Bit(s)	R/W	Default	Description
31	R/W	0	reserved
30	R/W	0	eth_phy_clk25min_en:
29:28	R/W	0	reserved
27:24	R/W	0	debug output bus select
23:13	R/W	0	reserved
12	R/W	0	analog production test mode enable
11	R/W	0	mdi source select
10	R/W	0	reserved
9	R/W	0	source select for rx_clk to mac
8	R/W	0	source select for tx_clk output to gpio
7	R/W	0	rx_dv/col switch for mac
6	R/W	0	ephy smi source select
5	R/W	0	use internal phy
4	R/W	0	ephy smi source select
3	R/W	0	co_clkin source select
2	R/W	0	co_mdclk source select
1	R/W	0	enable reset in test mode
0	R/W	0	ephy loopback mode enable, in/out through debug in/out gpio

Amlogic Proprietary and Confidential
Copyright © Amlogic. All rights reserved.

Table 14-52 ETH_PHY_CNTL3 0x8C

Bit(s)	R/W	Default	Description
6	R/W	0	eth_txda_test_sel
5:0	R/W	0	eth_txda_test_data

Table 14-53 ETH_PHY_STS0 0x94

Bit(s)	R/W	Default	Description
31:28	R		reserved
27:19	R		co_int_vec8:0
19	R		reserved
18:0	R		ETH_PLL_STS18:0

Table 14-54 ETH_PHY_STS1 0x98

Bit(s)	R/W	Default	Description
31:0	R		eth_phy_dbg_prb

Table 14-55 ETH_PHY_STS2 0x9C

Bit(s)	R/W	Default	Description
31:26	R		eth_phy_rxda5:0
25	R		eth_phy_rxadcoflw
24	R		eth_phy_rxadcuflw
23	R		eth_phy_rxprepga
22:20	R		eth_phy_rxgain2:0
19:0	R		eth_test_status

Table 14-56 ETH_PHY_DBG_REG 0xA0

Bit(s)	R/W	Default	Description
31:16	R		eth_phy_dbg_reg
15:8			reserved
7:0	R/W	0	eth_phy_dbg_reg_mux

14.4 Inter-Integrated Circuit (I2C)

Amlogic Proprietary and Confidential
Copyright © Amlogic. All rights reserved.

14.4.1 Overview

Inter-Integrated Circuit (IIC or I2C) is a multi-slave serial communication bus between ICs. The chip integrates the I2C interface and signals allowing communications with other I2C peripheral devices.

Figure 14-1 I2C Diagram

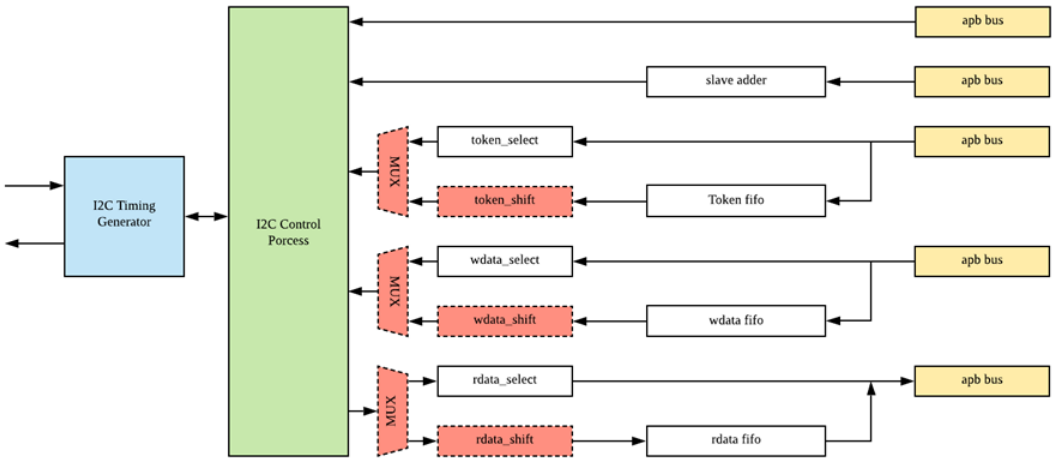

14.4.2 Features

The I2C Master Module has the following features:

- Support for 7-bit and 10-bit addressable devices
- Programmable bus speed including standard speed (100 KBits/s) and fast speed (400 KBits/s)
- Error transfer detection
- “Transfer complete” indication by polling or interrupt (Interrupts handled by the ISA module).
- Internal buffer holding up to 8 bytes for transfer (in either direction)
- Flexible architecture allowing the software to dictate the format of the I2C bit streams
- Manual setting of the I2C bus to accommodate a software only mode

14.4.3 Register Description

The following list shows address for each I2C registers.

- I2C_M_AO_A_CONTROL_REG 0xfe076000
- I2C_M_AO_A_SLAVE_ADDR 0xfe076004
- I2C_M_AO_A_TOKEN_LIST0 0xfe076008
- I2C_M_AO_A_TOKEN_LIST1 0xfe07600c
- I2C_M_AO_A_WDATA_REG0 0xfe076010
- I2C_M_AO_A_WDATA_REG1 0xfe076014
- I2C_M_AO_A_RDATA_REG0 0xfe076018
- I2C_M_AO_A_RDATA_REG1 0xfe07601c
- I2C_M_AO_A_TIMEOUT_TH 0xfe076020
- I2C_M_AO_A_CNTL_DELY1 0xfe076024
- I2C_M_AO_A_CNTL_DELY2 0xfe076028

Amlogic Proprietary and Confidential
Copyright © Amlogic. All rights reserved.

- I2C_M_AO_A_LOW_DELY 0xfe07602c
- I2C_M_AO_A_HIGH_DELY 0xfe076030
- I2C_M_AO_A_FIFO_CTRL0 0xfe076034
- I2C_M_AO_A_FIFO_CTRL1 0xfe076038
- I2C_M_AO_A_FIFO_PENDING 0xfe07603c
- I2C_M_AO_A_FIFO_PENDING_MASK 0xfe076040
- I2C_M_AO_A_FIFO_ST0 0xfe076044
- I2C_M_AO_B_CONTROL_REG 0xfe086000
- I2C_M_AO_B_SLAVE_ADDR 0xfe086004
- I2C_M_AO_B_TOKEN_LIST0 0xfe086008
- I2C_M_AO_B_TOKEN_LIST1 0xfe08600c
- I2C_M_AO_B_WDATA_REG0 0xfe086010
- I2C_M_AO_B_WDATA_REG1 0xfe086014
- I2C_M_AO_B_RDATA_REG0 0xfe086018
- I2C_M_AO_B_RDATA_REG1 0xfe08601c
- I2C_M_AO_B_TIMEOUT_TH 0xfe086020
- I2C_M_AO_B_CNTL_DELY1 0xfe086024
- I2C_M_AO_B_CNTL_DELY2 0xfe086028
- I2C_M_AO_B_LOW_DELY 0xfe08602c
- I2C_M_AO_B_HIGH_DELY 0xfe086030
- I2C_M_AO_B_FIFO_CTRL0 0xfe086034
- I2C_M_AO_B_FIFO_CTRL1 0xfe086038
- I2C_M_AO_B_FIFO_PENDING 0xfe08603c
- I2C_M_AO_B_FIFO_PENDING_MASK 0xfe086040
- I2C_M_AO_B_FIFO_ST0 0xfe086044
- I2C_M_A_CONTROL_REG 0xfe066000
- I2C_M_A_SLAVE_ADDR 0xfe066004
- I2C_M_A_TOKEN_LIST0 0xfe066008
- I2C_M_A_TOKEN_LIST1 0xfe06600c
- I2C_M_A_WDATA_REG0 0xfe066010
- I2C_M_A_WDATA_REG1 0xfe066014
- I2C_M_A_RDATA_REG0 0xfe066018
- I2C_M_A_RDATA_REG1 0xfe06601c
- I2C_M_A_TIMEOUT_TH 0xfe066020
- I2C_M_A_CNTL_DELY1 0xfe066024
- I2C_M_A_CNTL_DELY2 0xfe066028
- I2C_M_A_LOW_DELY 0xfe06602c
- I2C_M_A_HIGH_DELY 0xfe066030
- I2C_M_A_FIFO_CTRL0 0xfe066034
- I2C_M_A_FIFO_CTRL1 0xfe066038
- I2C_M_A_FIFO_PENDING 0xfe06603c
- I2C_M_A_FIFO_PENDING_MASK 0xfe066040
- I2C_M_A_FIFO_ST0 0xfe066044
- I2C_M_B_CONTROL_REG 0xfe068000

Amlogic Proprietary and Confidential
Copyright © Amlogic. All rights reserved.

- I2C_M_B_SLAVE_ADDR 0xfe068004
- I2C_M_B_TOKEN_LIST0 0xfe068008
- I2C_M_B_TOKEN_LIST1 0xfe06800c
- I2C_M_B_WDATA_REG0 0xfe068010
- I2C_M_B_WDATA_REG1 0xfe068014
- I2C_M_B_RDATA_REG0 0xfe068018
- I2C_M_B_RDATA_REG1 0xfe06801c
- I2C_M_B_TIMEOUT_TH 0xfe068020
- I2C_M_B_CNTL_DELY1 0xfe068024
- I2C_M_B_CNTL_DELY2 0xfe068028
- I2C_M_B_LOW_DELY 0xfe06802c
- I2C_M_B_HIGH_DELY 0xfe068030
- I2C_M_B_FIFO_CTRL0 0xfe068034
- I2C_M_B_FIFO_CTRL1 0xfe068038
- I2C_M_B_FIFO_PENDING 0xfe06803c
- I2C_M_B_FIFO_PENDING_MASK 0xfe068040
- I2C_M_B_FIFO_ST0 0xfe068044
- I2C_M_C_CONTROL_REG 0xfe06a000
- I2C_M_C_SLAVE_ADDR 0xfe06a004
- I2C_M_C_TOKEN_LIST0 0xfe06a008
- I2C_M_C_TOKEN_LIST1 0xfe06a00c
- I2C_M_C_WDATA_REG0 0xfe06a010
- I2C_M_C_WDATA_REG1 0xfe06a014
- I2C_M_C_RDATA_REG0 0xfe06a018
- I2C_M_C_RDATA_REG1 0xfe06a01c
- I2C_M_C_TIMEOUT_TH 0xfe06a020
- I2C_M_C_CNTL_DELY1 0xfe06a024
- I2C_M_C_CNTL_DELY2 0xfe06a028
- I2C_M_C_LOW_DELY 0xfe06a02c
- I2C_M_C_HIGH_DELY 0xfe06a030
- I2C_M_C_FIFO_CTRL0 0xfe06a034
- I2C_M_C_FIFO_CTRL1 0xfe06a038
- I2C_M_C_FIFO_PENDING 0xfe06a03c
- I2C_M_C_FIFO_PENDING_MASK 0xfe06a040
- I2C_M_C_FIFO_ST0 0xfe06a044
- I2C_M_D_CONTROL_REG 0xfe06c000
- I2C_M_D_SLAVE_ADDR 0xfe06c004
- I2C_M_D_TOKEN_LIST0 0xfe06c008
- I2C_M_D_TOKEN_LIST1 0xfe06c00c
- I2C_M_D_WDATA_REG0 0xfe06c010
- I2C_M_D_WDATA_REG1 0xfe06c014
- I2C_M_D_RDATA_REG0 0xfe06c018
- I2C_M_D_RDATA_REG1 0xfe06c01c
- I2C_M_D_TIMEOUT_TH 0xfe06c020

Amlogic Proprietary and Confidential
Copyright © Amlogic. All rights reserved.

- I2C_M_D_CNTL_DELY1 0xfe06c024
- I2C_M_D_CNTL_DELY2 0xfe06c028
- I2C_M_D_LOW_DELY 0xfe06c02c
- I2C_M_D_HIGH_DELY 0xfe06c030
- I2C_M_D_FIFO_CTRL0 0xfe06c034
- I2C_M_D_FIFO_CTRL1 0xfe06c038
- I2C_M_D_FIFO_PENDING 0xfe06c03c
- I2C_M_D_FIFO_PENDING_MASK 0xfe06c040
- I2C_M_D_FIFO_ST0 0xfe06c044
- I2C_M_E_CONTROL_REG 0xfe06e000
- I2C_M_E_SLAVE_ADDR 0xfe06e004
- I2C_M_E_TOKEN_LIST0 0xfe06e008
- I2C_M_E_TOKEN_LIST1 0xfe06e00c
- I2C_M_E_WDATA_REG0 0xfe06e010
- I2C_M_E_WDATA_REG1 0xfe06e014
- I2C_M_E_RDATA_REG0 0xfe06e018
- I2C_M_E_RDATA_REG1 0xfe06e01c
- I2C_M_E_TIMEOUT_TH 0xfe06e020
- I2C_M_E_CNTL_DELY1 0xfe06e024
- I2C_M_E_CNTL_DELY2 0xfe06e028
- I2C_M_E_LOW_DELY 0xfe06e02c
- I2C_M_E_HIGH_DELY 0xfe06e030
- I2C_M_E_FIFO_CTRL0 0xfe06e034
- I2C_M_E_FIFO_CTRL1 0xfe06e038
- I2C_M_E_FIFO_PENDING 0xfe06e03c
- I2C_M_E_FIFO_PENDING_MASK 0xfe06e040
- I2C_M_E_FIFO_ST0 0xfe06e044
- I2C_M_F_CONTROL_REG 0xfe070000
- I2C_M_F_SLAVE_ADDR 0xfe070004
- I2C_M_F_TOKEN_LIST0 0xfe070008
- I2C_M_F_TOKEN_LIST1 0xfe07000c
- I2C_M_F_WDATA_REG0 0xfe070010
- I2C_M_F_WDATA_REG1 0xfe070014
- I2C_M_F_RDATA_REG0 0xfe070018
- I2C_M_F_RDATA_REG1 0xfe07001c
- I2C_M_F_TIMEOUT_TH 0xfe070020
- I2C_M_F_CNTL_DELY1 0xfe070024
- I2C_M_F_CNTL_DELY2 0xfe070028
- I2C_M_F_LOW_DELY 0xfe07002c
- I2C_M_F_HIGH_DELY 0xfe070030
- I2C_M_F_FIFO_CTRL0 0xfe070034
- I2C_M_F_FIFO_CTRL1 0xfe070038
- I2C_M_F_FIFO_PENDING 0xfe07003c
- I2C_M_F_FIFO_PENDING_MASK 0xfe070040

Amlogic Proprietary and Confidential
Copyright © Amlogic. All rights reserved.

- I2C_M_F_FIFO_ST0 0xfe070044

The following content describes registers of I2C_M_A, and the other I2C's registers description is the same.

Table 14-57 I2C_M_A_CONTROL_REG

Bit(s)	R/W	Default	Description
31	R/W	0	CNTL_JIC: There is internal logic to dynamically enable the gated clocks. If this gated clock logic doesn't work, you can set this bit to always enable the clock. Setting this bit wastes power.
30	R/W	0	enhance mode, enhance mode enable timming adjust. =1,enable enhance mode =0, disable enhance mode
29-28	R/W	0	QTR_CLK_EXT: These two bits extend the clock divider to 12 bits: QTR_CLK = {[29:28],[21:12]}
26	R	0	Read back level of the SDA line
25	R	0	Read back level of the SCL line
24	R/W	0	Sets the level of the SDA line if manual mode is enabled. If this bit is '0', then the SDA line is pulled low. If this bit is '1' then the SDA line is tri-stated.
23	R/W	0	Sets the level of the SCL line if manual mode is enabled. If this bit is '0', then the SCL line is pulled low. If this bit is '1' then the SCL line is tri-stated.
22	R/W	0	This bit is used to enable manual mode. Manual I2C mode is controlled by bits 12,13,14 and 15 above.
21:12	R/W	0x142	QTR_CLK_DLY. This value corresponds to period of the SCL clock divided by 4 Quarter Clock Delay = * System Clock Frequency For example, if the system clock is 133Mhz, and the I2C clock period is 10uS (100khz), then Quarter Clock Delay = * 133 Mhz = 332
11:8	R	-	READ_DATA_COUNT: This value corresponds to the number of bytes READ over the I2C bus. If this value is zero, then no data has been read. If this value is 1, then bits [7:0] in TOKEN_RDATA_REG0 contains valid data. The software can read this register after an I2C transaction to get the number of bytes to read from the I2C device.
7:4	R	-	CURRENT_TOKEN: This value reflects the current token being processed. In the event of an error, the software can use this value to determine the error location.
3	R	-	ERROR: This read only bit is set if the I2C device generates a NACK during writing. This bit is cleared at on the clock cycle after the START bit is set to 1 indicating the start of list processing. Errors can be ignored by setting the ACK_ IGNORE bit below. Errors will be generated on Writes to devices that return NACK instead of ACK. A NACK is returned by a device if it is unable to accept any more data (for example because it is processing some other real-time function). In the event of an ERROR, the I2C module will automatically generate a STOP condition on the bus.
2	R	-	STATUS: This bit reflects the status of the List processor: 0: IDLE 1: Running. The list processor will enter this state on the clock cycle after the START bit is set. The software can poll the status register to determine when processing is complete.

Amlogic Proprietary and Confidential
Copyright © Amlogic. All rights reserved.

Bit(s)	R/W	Default	Description
1	R/W	0	ACK_IGNORE: Set to 1 to disable I2C ACK detection. The I2C bus uses an ACK signal after every byte transfer to detect problems during the transfer. Current Software implementations of the I2C bus ignore this ACK. This bit is for compatibility with the current Amlogic software. This bit should be set to 0 to allow NACK operations to abort I2C bus transactions. If a NACK occurs, the ERROR bit above will be set.
0	R/W	0	START: Set to 1 to start list processing. Setting this bit to 0 while the list processor is operating causes the list processor to abort the current I2C operation and generate an I2C STOP command on the I2C bus. Normally this bit is set to 1 and left high until processing is complete. To re-start the list processor with a new list (after a previous list has been exhausted), simply set this bit to zero then to one.

Table 14-58 I2C_M_A_SLAVE_ADDR

Bit(s)	R/W	Default	Description
31:29	R	0	Unused
28	R/W	0	USE_CNTL_SCL_LOW: If this bit is set to 1, then bits[27:16] control the SCL low time.
27:16	R/W	0	SCL Low delay. This is a new feature in M8baby. In the previous M8baby design, the SCL low time was controlled by bits[21:12] of the register above. In this design, the SCL delay is controlled independently by these bits.
15:14	R	0	Unused
13-11	R/W	0	SCL_FILTER: A filter was added in the SCL input path to allow for filtering of slow rise times. 0 = no filtering, 7 = max filtering
10:8	R/W	0	SDA FILTER: A filter was added in the SDA input path to allow for filtering of slow rise times. 0 = no filtering, 7 = max filtering
7:0	R/W	0x00	SLAVE_ADDRESS. This is a 7-bit value for a 7-bit I2C device, or (0xF0 | {A9, A8}) for a 10-bit I2C device. By convention, the slave address is typically stored in by first left shifting it so that it's MSB is D7 (The I2C bus assumes the 7-bit address is left shifted one). Additionally, since the SLAVE address is always an 7-bit value, D0 is always 0. NOTE: The I2C always transfers 8-bits even for address. The I2C hardware will use D0 to dictate the direction of the bus. Therefore, D0 should always be '0' when this register is set.

Table 14-59 I2C_M_A_TOKEN_LIST0

Bit(s)	R/W	Default	Description
31:28	R/W	0x00	8th token in the list to process
27:24	R/W	0x00	7th token in the list to process
23:20	R/W	0x00	6th token in the list to process
19:16	R/W	0x00	5th token in the list to process
15:12	R/W	0x00	4th token in the list to process
11:8	R/W	0x00	3rd token in the list to process
7:4	R/W	0x00	2nd token in the list to process
3:0	R/W	0x00	1st token in the list to process (See the table below for token definitions)

Amlogic Proprietary and Confidential
Copyright © Amlogic. All rights reserved.

Table 14-60 Token Definitions

Command Token	Value	Data	Description
END	0x0	N/A	Used to tell the I²C module that this is the end of the Token list. This token is not associated with the I²C bus, but rather with the state-machine that drives the token list processor.
START	0x1	N/A	The START Token is used to tell an I²C device that this is the beginning of an I²C transfer
SLAVE_ ADDR-WRITE	0x2	7-bits	This bit-sequence is used to address a device and tell the device it is being WRITTEN
SLAVE_ ADDR-READ	0x3	7-bits	This bit sequence is used to address a device and tell the device it is being READ.
DATA	0x4	8-bits	This 8-bit byte sequence is a byte transfer (READ or WRITE). The DATA token corresponds to a WRITE if it follows a SLAVE_ADDR-WRITE token. The DATA token corresponds to a READ if it follows a SLAVE_ADDR-READ token.
DATA-LAST	0x5	8-bits	Used to indicate the last 8-bit byte transfer is a byte transfer of a READ.
STOP	0x6	N/A	This tells the I²C device it is no longer being addressed

Write data associated with the DATA token should be placed into the I2C_TOKEN_WDATA_REG0 or I2C_TOKEN_WDATA_REG1 registers.

Read data associated with the DATA or DATA-LAST token can be read from the I2C_TOKEN_RDATA_REG0 or I2C_TOKEN_RDATA_REG1 registers.

Table 14-61 I2C_M_A_TOKEN_LIST1

Bit(s)	R/W	Default	Description
31:28	R/W	0x00	16th token in the list to process
27:24	R/W	0x00	15th token in the list to process
23:20	R/W	0x00	14th token in the list to process
19:16	R/W	0x00	13th token in the list to process
15:12	R/W	0x00	12th token in the list to process
11:8	R/W	0x00	11th token in the list to process
7:4	R/W	0x00	10th token in the list to process
3:0	R/W	0x00	9th token in the list to process

Table 14-62 I2C_M_A_WDATA_REG0

Bit(s)	R/W	Default	Description
31:24	R/W	0x00	4th data byte written for a DATA (write) token.
23:16	R/W	0x00	3rd data byte written for a DATA (write) token.
15:8	R/W	0x00	2nd data byte written for a DATA (write) token.
7:0	R/W	0x00	1st data byte written for a DATA (write) token.

Amlogic Proprietary and Confidential
Copyright © Amlogic. All rights reserved.

Table 14-63 I2C_M_A_WDATA_REG1

Bit(s)	R/W	Default	Description
31:24	R/W	0x00	8th data byte written for a DATA (write) token.
23:16	R/W	0x00	7th data byte written for a DATA (write) token.
15:8	R/W	0x00	6th data byte written for a DATA (write) token.
7:0	R/W	0x00	5th data byte written for a DATA (write) token.

Table 14-64 I2C_M_A_RDATA_REG0

Bit(s)	R/W	Default	Description
31:24	R/W	0x00	4th data byte read for a DATA or DATA-LAST (READ) token.
23:16	R/W	0x00	3rd data byte read for a DATA or DATA-LAST (READ) token.
15:8	R/W	0x00	2nd data byte read for a DATA or DATA-LAST (READ) token.
7:0	R/W	0x00	1st data byte read for a DATA or DATA-LAST (READ) token.

Table 14-65 I2C_M_A_RDATA_REG1

Bit(s)	R/W	Default	Description
31:24	R/W	0x00	8th data byte read for a DATA or DATA-LAST (READ) token.
23:16	R/W	0x00	7th data byte read for a DATA or DATA-LAST (READ) token.
15:8	R/W	0x00	6th data byte read for a DATA or DATA-LAST (READ) token.
7:0	R/W	0x00	5th data byte read for a DATA or DATA-LAST (READ) token.

Table 14-66 I2C_M_A_TIMEOUT_TH

Bit(s)	R/W	Default	Description
11:0	R/W	0x00	timeout irq th

Table 14-67 I2C_M_A_CTRL_DELY1_REG

Bit(s)	R/W	Default	Description
31:24	R/W	0	Reserved
23:12	R/W	0x14c	repeat start command control delay value,Used to repair timing. Valid in the enhance mode.
11:0	R/W	0x14c	start command control delay value,Used to repair timing. Valid in the enhance mode.

Amlogic Proprietary and Confidential
Copyright © Amlogic. All rights reserved.

Table 14-68 I2C_M_A_CTRL_DELY2_REG

Bit(s)	R/W	Default	Description
31:12	R/W	0	Reserved
11:0	R/W	0x14c	stop command control delay value,Used to repair timing. Valid in the enhance mode.

Table 14-69 I2C_M_A_LOW_DELY_REG

Bit(s)	R/W	Default	Description
31:24	R/W	0	Reserved
23:12	R/W	0x14c	low2_delay data transfer second low level delay,Used to repair timing. Valid in the enhance mode.
11:0	R/W	0x14c	low1_delay data transfer first low level delay,Used to repair timing. Valid in the enhance mode.

Table 14-70 I2C_M_A_HIGH_DELY_REG

Bit(s)	R/W	Default	Description
31:24	R/W	0	Reserved
23:12	R/W	0xA6	high2_delay data transfer second high level delay,Used to repair timing. Valid in the enhance mode.
11:0	R/W	0xA6	high1_delay data transfer first high level delay,Used to repair timing. Valid in the enhance mode.

Table 14-71 I2C_M_A_FIFO_CTRL0 0x0D

Bit(s)	R/W	Default	Description
30	R/W	0x00	reg_fifo_mode
24	R/W	0x00	reg_fifo_timeout_stop
23	R/W	0x00	reg_fifo_timeout_clr
22	R/W	0x00	reg_fifo_timeout_en
21	R/W	0x00	reg_fifo_irq_mode :0 pluse 1 level
20	R/W	0x00	reg_fifo_err_stop
18	R/W	0x00	reg_rd_fifo_rst
17	R/W	0x00	reg_wd_fifo_rst
16	R/W	0x00	reg_tk_fifo_rst

Amlogic Proprietary and Confidential
Copyright © Amlogic. All rights reserved.

Table 14-72 I2C_M_A_FIFO_CTRL1 0x0E

Bit(s)	R/W	Default	Description
31:16	R/W	0x00	reg_fifo_timeout_thd
11:8	R/W	0x00	reg_rd_fifo_thd
7:4	R/W	0x00	reg_wd_fifo_thd
2:0	R/W	0x00	reg_tk_fifo_thd

Table 14-73 I2C_M_A_FIFO_PENDING 0x0F

Bit(s)	R/W	Default	Description
11	R/W	0x00	tk_fifo_underflow_pending,write 1 to clear pending
10	R/W	0x00	tk_fifo_overflow_pending,write 1 to clear pending
9	R/W	0x00	wd_fifo_underflow_pending,write 1 to clear pending
8	R/W	0x00	wd_fifo_overflow_pending,write 1 to clear pending
7	R/W	0x00	rd_fifo_underflow_pending,write 1 to clear pending
6	R/W	0x00	rd_fifo_overflow_pending,write 1 to clear pending
5	R/W	0x00	fifo_timeout_pending,write 1 to clear pending
4	R/W	0x00	rd_fifo_thd_irq_pending,write 1 to clear pending
3	R/W	0x00	wd_fifo_thd_irq_pending,write 1 to clear pending
2	R/W	0x00	tk_fifo_thd_irq_pending,write 1 to clear pending
1	R/W	0x00	error_pending,write 1 to clear pending
0	R/W	0x00	i2c_st_in_idle_pending,write 1 to clear pending

Table 14-74 I2C_M_A_FIFO_PENDING_MASK 0x10

Bit(s)	R/W	Default	Description
11:0	R/W	0x00	pending mask

Table 14-75 I2C_M_A_FIFO_ST0 0x11

Bit(s)	R/W	Default	Description
31:28	RO	0x00	wd_data_valid
26:24	RO	0x00	rd_data_valid
23:21	RO	0x00	rdata_din_valid
20:16	RO	0x00	tk_data_valid
14:12	RO	0x00	i2c_st
10:8	RO	0x00	token_count
7:4	RO	0x00	wdata_count
3:0	RO	0x00	rdata_count

Amlogic Proprietary and Confidential
Copyright © Amlogic. All rights reserved.

14.5 Universal Asynchronous Receiver And Transmitter

14.5.1 Overview

A universal asynchronous receiver-transmitter (UART) is a computer hardware device for asynchronous serial communication in which the data format and transmission speeds are configurable. It sends data bits one by one, from the least significant to the most significant, framed by start and stop bits so that precise timing is handled by the communication channel. The UART is an Advanced Micro controller Bus Architecture (AMBA) compliant System-on-Chip (SoC) peripheral. The UART is an AMBA slave module that connects to the Advanced Peripheral Bus (APB).

The UART performs:

- serial-to-parallel conversion on data received from a peripheral device
- parallel-to-serial conversion on data transmitted to the peripheral device.

The CPU reads and writes data and control/status information through the AMBA APB interface. The transmit and receive paths are buffered with internal FIFO memories enabling up to 64/128-bytes to be stored independently in both transmit and receive modes. The FIFO's are filled by the CPU and read by the CPU. In some cases, the receive FIFO can be configured to be pushed directly to DDR memory without CPU intervention.

There are a number of UARTs in the chip that offer 2-wire (RX/TX) and 4-wire (RX/TX, CTS/RTS) connections at the digital I/O pins. Each UART contains one transmit FIFO and a receive FIFO (see depths below). The FIFO's are filled by the CPU and read by the CPU.

Amlogic Proprietary and Confidential
Copyright © Amlogic. All rights reserved.

Figure 14-2 UART TOP Diagram

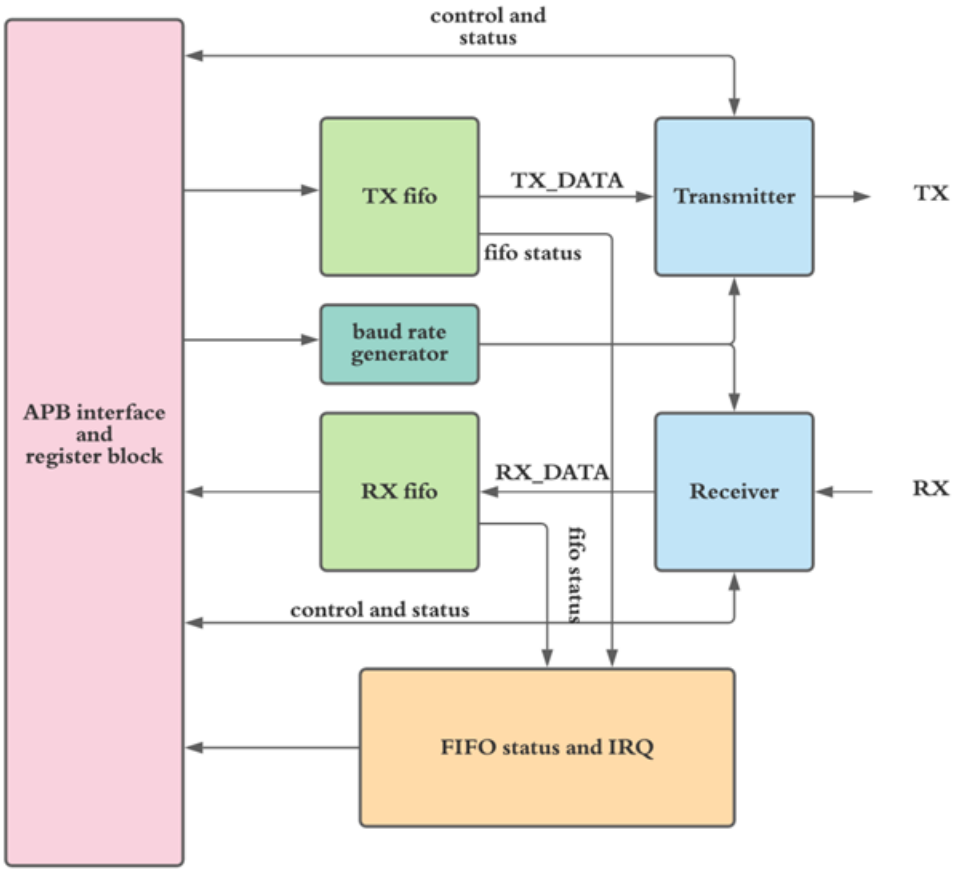

14.5.2 Features

Input filters

The CTS (clear to send) and RX (receive) input paths have input filters to deal with slow rise times. The filters are configurable to use a 125ns or 1us sampling mechanism. There is an implied 3 system clock cycle delay (15ns for a typical system clock of 200MHz) that is used to synchronize and detect the rising/falling edge of the RXD signal. The RXD signal may be passed through an optional filter to deglitch the external signal in noisy conditions. The deglitch filter has two settings which add to the “detection delay” of the RXD signal by the internal logic:

- Filter setting 1 (125ns strobe): 375ns ~ 2.6us
- Filter setting 2 (1us strobe): 3us ~ 21us

The filter is described in the register specification. If the filter is disabled, the shortest RXD low time and high time is 12 system clock cycles (60ns for a system clock of 200MHz).

Clear to Send

CTS is a signal sent from the receiver UART back to the transmitting UART to tell the transmitting UART to stop sending data. The CTS signal must be received before the next START symbol is sent. The transmitting UART is allowed to send one more byte after the CTS signal is recognized. The CTS signal coming into the chip goes through some synchronization and detection which adds an additional 5 system clocks (typically 25ns for a 200Mhz system clock). This setup time for CTS detection is called CTSstop. The CTS input also has an optional filter can be used to deglitch the incoming CTS signal. If the filter is disabled, the CTS signal must be de-asserted 5 system clock cycles before the start of the

Amlogic Proprietary and Confidential
Copyright © Amlogic. All rights reserved.

next BYTE transfer. If the CTS filter is enabled, then additional time must be added to the 25ns requirement. There are two programmable filter settings that effectively delay CTS being seen by the internal logic:

- Filter setting 1 (125ns strobe): 375ns ~ 2.6us
- Filter setting 2 (1us strobe): 3us ~ 21us

Interrupts

The UARTs can generate interrupts if the receive FIFO exceeds a pre-programmed threshold. An interrupt can also be generated if there is a frame or parity error.

Clock Independent Operation

Because the system clock can be altered to accommodate dynamic frequency scaling, the UARTs have an option in which they use the 24Mhz crystal clock as the source for the UART.

14.5.3 Functional Description

The UART requires that a Baud Rate be established. The UART supports rates as slow as 1Hz up to rates as high as 8M bits/s. Once the baud rate has been established, bytes are transmitted as they are written to the transmit-FIFO by the CPU. A large transmit-FIFO exists to allow the CPU to pre-load a transmit package because the CPU can often write faster than the UART can transmit the data.

Data this automatically received by the UART is placed into the receive FIFO one byte at a time. The receive-FIFO decouples the UART from the CPU allowing the CPU to read the UART byte data at a rate not dictated by the UART.

14.5.4 Register Description

The following register description is uniformly applied to all UART instantiations in the chip.

- UART_A_WFIFO 0xfe078000
- UART_A_RFIFO 0xfe078004
- UART_A_CONTROL 0xfe078008
- UART_A_STATUS 0xfe07800c
- UART_A_MISC 0xfe078010
- UART_A_REG5 0xfe078014
- UART_B_WFIFO 0xfe07a000
- UART_B_RFIFO 0xfe07a004
- UART_B_CONTROL 0xfe07a008
- UART_B_STATUS 0xfe07a00c
- UART_B_MISC 0xfe07a010
- UART_B_REG5 0xfe07a014
- UART_C_WFIFO 0xfe07c000
- UART_C_RFIFO 0xfe07c004
- UART_C_CONTROL 0xfe07c008
- UART_C_STATUS 0xfe07c00c
- UART_C_MISC 0xfe07c010
- UART_C_REG5 0xfe07c014
- UART_D_WFIFO 0xfe07e000
- UART_D_RFIFO 0xfe07e004
- UART_D_CONTROL 0xfe07e008

Amlogic Proprietary and Confidential
Copyright © Amlogic. All rights reserved.

- UART_D_STATUS 0xfe07e00c
- UART_D_MISC 0xfe07e010
- UART_D_REG5 0xfe07e014
- UART_E_WFIFO 0xfe080000
- UART_E_RFIFO 0xfe080004
- UART_E_CONTROL 0xfe080008
- UART_E_STATUS 0xfe08000c
- UART_E_MISC 0xfe080010
- UART_E_REG5 0xfe080014
- UART_F_WFIFO 0xfe082000
- UART_F_RFIFO 0xfe082004
- UART_F_CONTROL 0xfe082008
- UART_F_STATUS 0xfe08200c
- UART_F_MISC 0xfe082010
- UART_F_REG5 0xfe082014

Table 14-76 UARTx_WFIFO

Bit(s)	R/W	Default	Description
31-8	R	0	unused
7-0	R/W	-	Write FIFO data. The Write FIFO holds 128 or 64 bytes. The Write FIFO can be written as long as it is not full.

Table 14-77 UARTx_RFIFO

Bit(s)	R/W	Default	Description
31-8	R	0	unused
7-0	R/W	-	Read FIFO data. The Read FIFO holds 128 or 64 bytes. The empty flag can be used to determine if data is available

Table 14-78 UARTx_CONTROL

Bit(s)	R/W	Default	Description
31	R/W	0	Invert the RTS signal
30	R/W	0	Mask Error: Set to 1 to mask errors
29	R/W	0	Invert the CTS signal
28	R/W	0	Transmit byte Interrupt: Set to 1 to enable the generation an interrupt whenever a byte is read from the transmit FIFO
27	R/W	0	Receive byte Interrupt: Set to 1 to enable the generation an interrupt whenever a byte is written to the receive FIFO
26	R/W	0	Set to 1 to invert the TX pin
25	R/W	0	Set to 1 to invert the RX pin
24	R/W	0	Clear Error
23	R/W	0	Reset the receive state machine
22	R/W	0	Reset the transmit state machine

Amlogic Proprietary and Confidential
Copyright © Amlogic. All rights reserved.

Bit(s)	R/W	Default	Description
21-20	R/W	0	Character length: 00 = 8 bits, 01 = 7 bits, 10 = 6 bits, 11 = 5 bits
19	R/W	1	Parity Enable: Set to 1 to enable parity
18	R/W	0	Parity type: 0 = even, 1 = odd
17-16	R/W	0	Stop bit length: 00 = 1 bit, 01 = 2 bits
15	R/W	0	Two Wire mode:
14	R/W	0	Unused
13	R/W	0	Receive Enable. Set to 1 to enable the UART receive function
12	R/W	0	Transmit Enable. Set to 1 to enable the UART transmit function
11-0	R/W	0x120	Old Baud rate:

Table 14-79 UARTx_STATUS

Bit(s)	R/W	Default	Description
31-27	R	0	Unused
26	R	0	UART_RECV_BUSY: This bit will be 1 if the uart receive state machine is busy
25	R	0	UART_XMIT_BUSY: This bit will be 1 if the uart transmit state machine is busy
24	R	0	RECV_FIFO_OVERFLOW:
23	R	0	CTS Level
22	R	0	Transmit FIFO Empty
21	R	0	Transmit FIFO Full
20	R	0	Receive FIFO empty
19	R	0	Receive FIFO full
18	R	0	This bit is set if the FIFO is written when it is full. To clear this bit, write bit 24 of register 0x2132
17	R	0	Frame error. To clear this bit, write bit 24 of register UART0_CONTROL
16	R	0	Parity error. To clear this bit, write bit 24 of register UART0_CONTROL
15	R	0	Unused
14-8	R	0	Transmit FIFO count. Number of bytes in the transmit FIFO
7	R	0	Unused
6-0	R	0	Receive FIFO count. Number of bytes in the receive FIFO

Table 14-80 UARTx_MISC

Bit(s)	R/W	Default	Description
31	R/W	0	Added a “just in case” bit that can be set to 1 to enable clocks always. The default is 0 meaning the auto-clock gating logic is enabled.
30	R/W	0	USE old Rx Baud: There was a bug in the RX baud rate generator. The Rx baud rate generator was re-designed to compute a baud rate correctly. If you want to use the old (stupid) logic, you can set this bit to 1.

Amlogic Proprietary and Confidential
Copyright © Amlogic. All rights reserved.

Bit(s)	R/W	Default	Description
29	R/W	0	ASYNC_FIFO_PURGE: This bit can be set to 1 after all UART bytes have been received in order to purge the data into the Async FIFO. This bit is needed because the UART receives 8-bit data, but the ASYNC FIFO can only be written with 16-bit data. In this case there might be a residual byte if the UART is not receiving an even number of bytes.
28	R/W	0	ASYNC_FIFO_EN: If this bit is set to 1, then the UART received data is automatically sent to the Async FIFO module which will in turn automatically send the data to DDR memory
27	R/W	0	CTS: Filter Timebase select: 1 = 1uS, 0 = 111nS timebase. A filter was added to the CTS input to allow for a little digital filtering. The amount of filtering is controlled by this timebase (longer = more filtering) and the value in bits FILTER_ SEL below.
26-24	R/W	0	CTS: FILTER_SEL: 0 = no filter, 7 = max filtering
23-20	R/W	0	Old BAUD_RATE_EXT: These 4 bits extend the baud rate divider to 16-bits: Baud Rate = {Reg4[23:20],Reg2[11:0]}
19	R/W	0	RX: Filter Timebase select: 1 = 1uS, 0 = 111nS timebase. A filter was added to the RX input to allow for a little digital filtering. The amount of filtering is controlled by this timebase (longer = more filtering) and the value in bits FILTER_ SEL below.
18-16	R/W	0	RX: FILTER_SEL: 0 = no filter, 7 = max filtering
15-8	R/W	32	XMIT_IRQ_CNT: The UART can be configured to generate an interrupt if the number of bytes in the transmit FIFO drops below this value.
7:0	R/W	15	RECV_IRQ_CNT: The UART can be configured to generate an interrupt after a certain number of bytes have been received by the UART.

Table 14-81 UARTx_REG5

Bit(s)	R/W	Default	Description
31-28	R/W	0	unused
27	R/W	0	Xtal2_clk_sel: 0: see Xtal_clk_sel 1: xtal_div2(12M)
26	R/W	0	Xtal_clk_sel: 0: xtal_div3(8M); 1: xtal(24M);(need set xtal_tick_en =1 first);
24	R/W	0	USE_XTAL_CLK: If this bit is set, then the clock for generating the UART Baud rate comes from the crystal pad. This allows the UART to operate independent of clk81.
23	R/W	0	USE New Baud rate. Over the years, the baud rate has been extended by concatenating bits from different registers. To take advantage of the full 23-bit baud rate generate (extended to 23 bits to accommodate very low baud rates), you must set this bit. If this bit is set, then the baud rate is configured using bits [22:0] below
22:0	R/W	15	NEW_BAUD_RATE: If bit[23] = 1 above, then the baud rate for the UART is computed using these bits.
31-28	R/W	0	unused
27	R/W	0	Xtal2_clk_sel: 0: see Xtal_clk_sel 1: xtal_div2(12M)
26	R/W	0	Xtal_clk_sel: 0: xtal_div3(8M);

Amlogic Proprietary and Confidential
Copyright © Amlogic. All rights reserved.

Bit(s)	R/W	Default	Description
			1: xtal(24M);(need set xtal_tick_en =1 first);
24	R/W	0	USE_XTAL_CLK: If this bit is set, then the clock for generating the UART Baud rate comes from the crystal pad. This allows the UART to operate independent of clk81.
23	R/W	0	USE New Baud rate. Over the years, the baud rate has been extended by concatenating bits from different registers. To take advantage of the full 23-bit baud rate generate (extended to 23 bits to accommodate very low baud rates), you must set this bit. If this bit is set, then the baud rate is configured using bits [22:0] below
22:0	R/W	15	NEW_BAUD_RATE: If bit[23] = 1 above, then the baud rate for the UART is computed using these bits. This was added in M6 to accommodate lower baud rates.

14.6 Infrared Remote

14.6.1 Overview

IR module includes 3 sub modules: IR demodulation, Legacy IR remote control and Multi-format IR remote control.

14.6.2 IR Demodulation

IR demolation module demodulate the modulate signal to get the envelop signal.

IR demulation diagram is shown below.

Amlogic Proprietary and Confidential
Copyright © Amlogic. All rights reserved.

Figure 14-3 IR Demulation

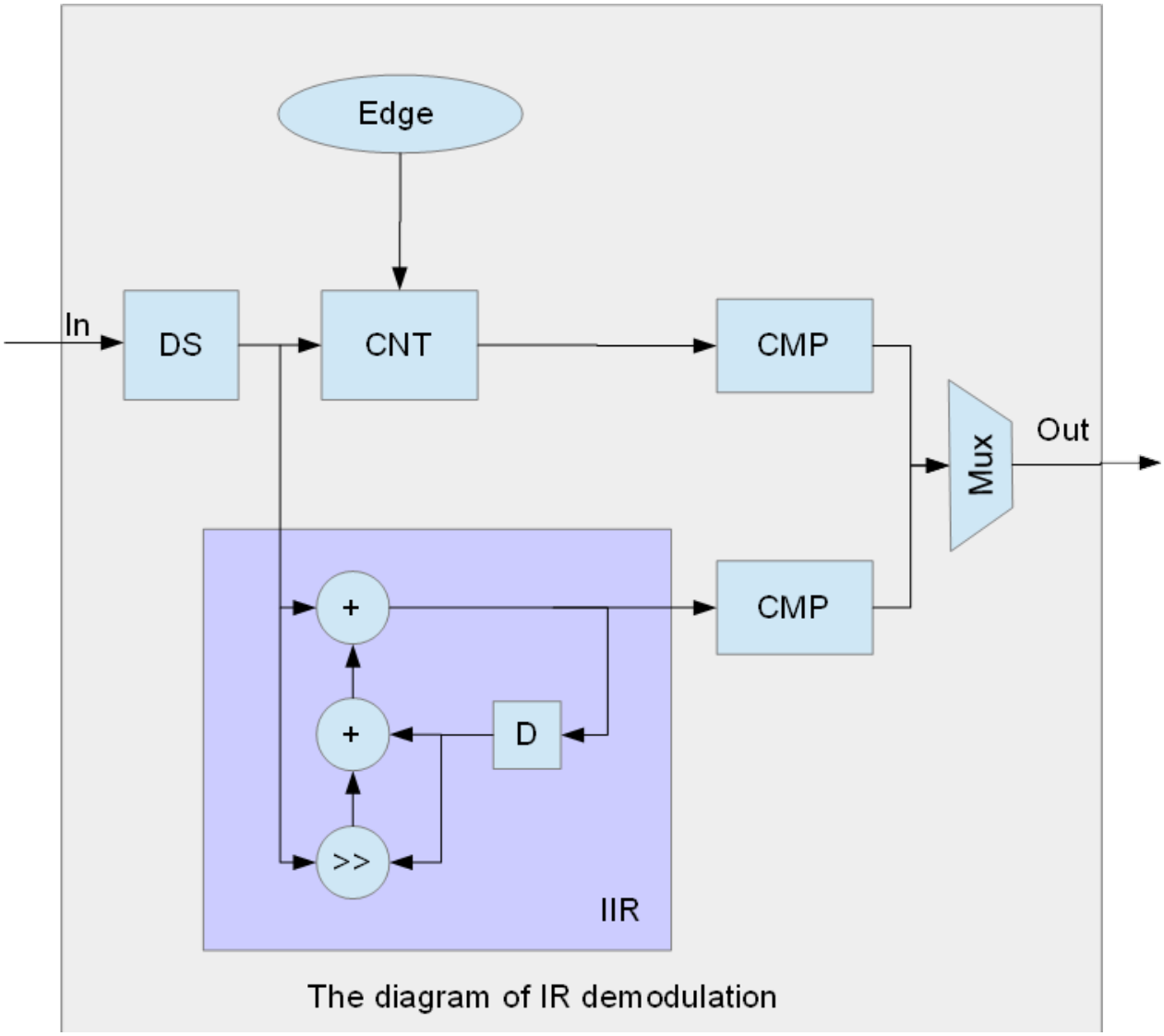

It implements two methods for demodulation. The input data is an one-bit stream.

The input data are down-sampled firstly. The rate of downsample are configured by register, ranges from 0 to 255.

One method is implemented in the upper path.

The CNT is used to counte the time for ‘0’ and ‘1’. It is cleared when input data changes (from 1 to 0 or from 0 to 1).

When (CNT>REG_IR_PROCT1 && in==1) , it outputs ‘1’. REG_IR_PROCT1 is used to canceled the glitch. Actually, the operation of downsample also have some utility to cancel the glitch.

When (CNT>REG_IR_DECT0 && in==0) , it outputs ‘0’. REG_IR_DECT0 is used to confirm the ‘0’. The value should be bigger than one carrier period.

The other method is implemented in the lower path.

It is a one tap IIR filter. The input data control the integrating factor and the factor can be configured from registers. When 1 inputs, the accumulator can grow quickly. When 0 input, the accumulator decays slowly, and when the number of 0 is bigger enough, it decays soon.

When (accum> REG_IR_IIR_THD1), it outputs ‘1’.

Amlogic Proprietary and Confidential
Copyright © Amlogic. All rights reserved.

When (accum< REG_IR_IIR_THD0), it outputs ‘0’.

The diagram shows the simple simulation result. The blue is the input data, the red is the filter out.

Figure 14-4 Simulation Result of IR Demulation

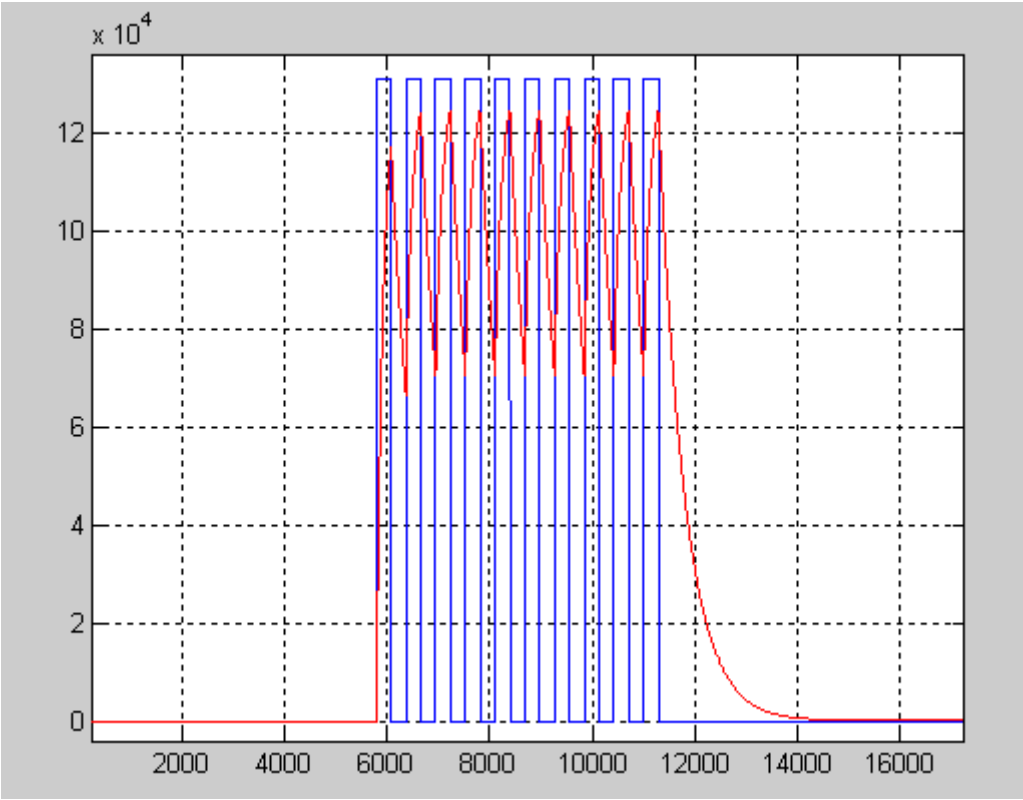

Because the input carrier signal is a rectangular wave signal, the carrier can be estimated easily by counting the wave period. For estimating precisely, the counter for the long “0” and start period and glitch should be removed.

The simple diagram is shown below:

Amlogic Proprietary and Confidential
Copyright © Amlogic. All rights reserved.

Figure 14-5 IR Carrier Discovery

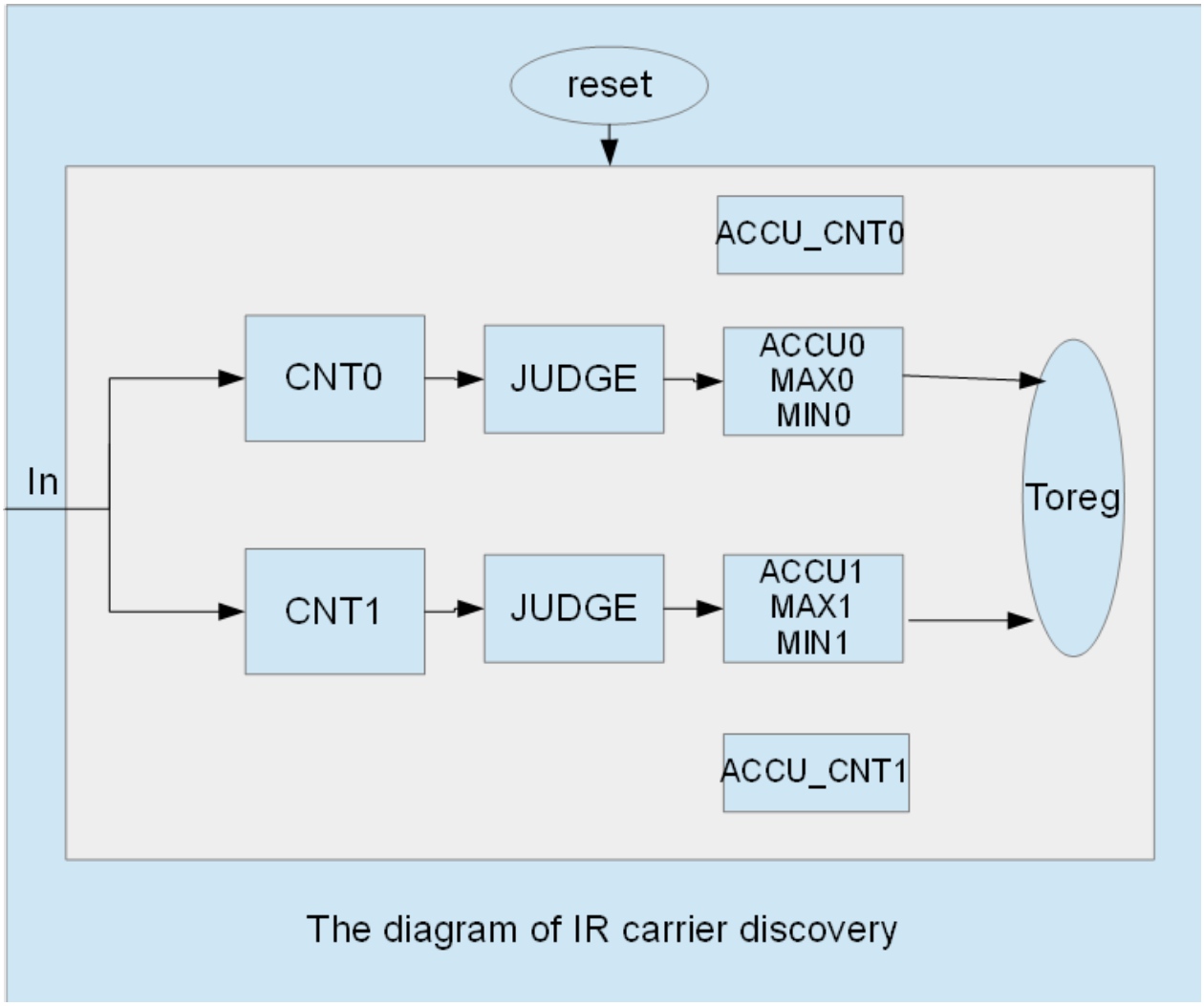

CNT is the counter for time of “0” and “1”.

JUDGE is used to remove the long “0” and glitch.

ACC_CNT is the counter for number of accumulating. If ACC_CNT== REG_IR_ST_CNT_THD, then write the value to registers.

For example:

Set REG_IR_ST_CNT_THD to 256, then accumulates 256 times.

The carrier can be calculated:

Fc = Fsys/(RO_IR_SUM_CNT0 +RO_IR_SUM_CNT1)*256;

DUT = RO_IR_SUM_CNT1/(RO_IR_SUM_CNT0 +RO_IR_SUM_CNT1);

Where Fc is the carrier frequency, Fsys is the system clock frequency, DUT is the carrier duty ratio.

14.6.3 Legacy IR Control

The Lagacy IR Remote control module has two modes of operation:

- NEC Frame decoder mode
- General Time Measurement mode

Amlogic Proprietary and Confidential
Copyright © Amlogic. All rights reserved.

Note

NEC Frame Decoder: The NEC Frame Decoder mode operates by analyzing the waveform of a TV remote.

Figure 14-6 NEC Frame Decoder

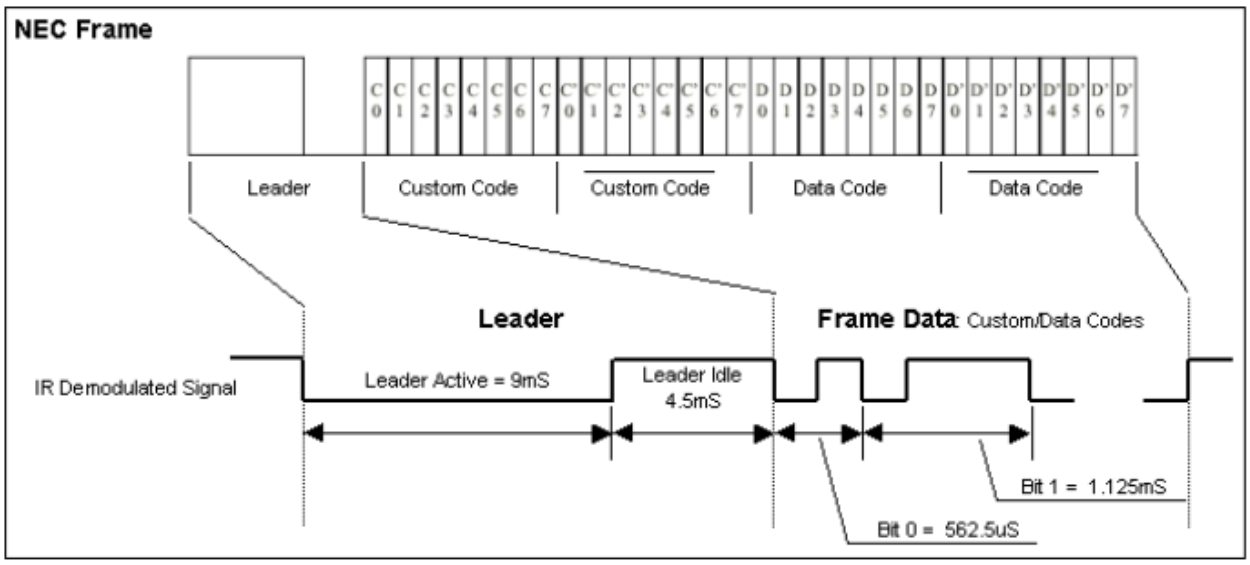

The waveform has a number of components, each of which must fit within a time window to be considered valid. If the entire waveform meets the specifications described by the registers below, then the TV remote codes are captured and an interrupt is generated.

Note

General Time Measurement: Some remotes don't follow the standard NEC format, so additional registers provide the ability to measure the time between rising and/or falling edges of the IR signal. Since the time measurement is done in hardware, the software only needs to read a "width" measurement from a register for every rising and/or falling edge event.

14.6.4 Multi Format IR Control

The decoder mainly consisted of two blocks:

- Decoder with input filter
- A set of registers including control & clock, data and tuning

The function diagram of IR decoder is illustrated in the figure below.

Amlogic Proprietary and Confidential
Copyright © Amlogic. All rights reserved.

Figure 14-7 IR Decoder Function Block

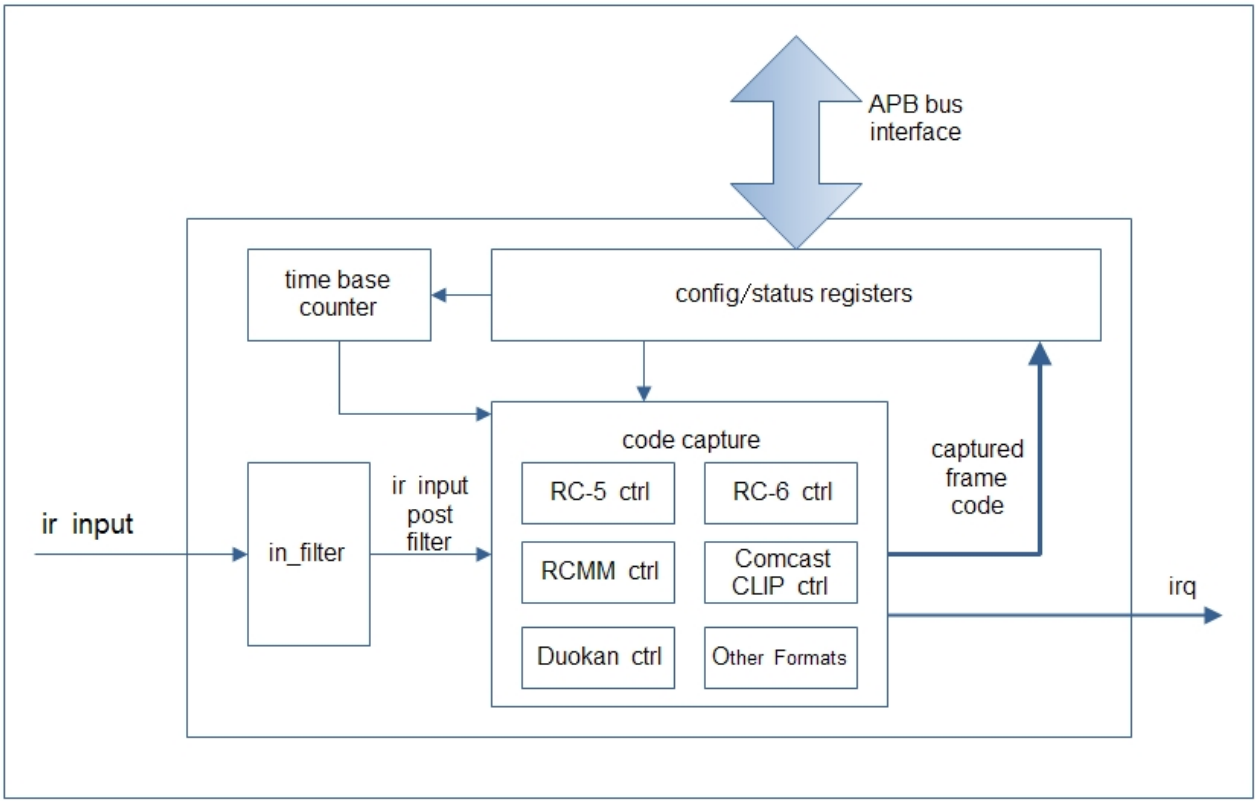

IR Decoder decodes the IR remote control input signal. 13 operation modes are supported:

- Hardware Decode IR transmission protocol compatible frame decoder mode (NEC MITSUBISHI Thomson Toshiba Sony SIRC RC5 RC6 RCMM Duokan Comcast Sanyo Modes)
- General programmable time measurement frame decoder mode (General Mode)

In Hardware Decode Mode, the Decoder uses signal pattern search mechanism to decode data frame. It can detect logical “0”, “1” , “00”, “01”, “10” and “11”, as well as data frame start and end. Whenever Decoder detects and decodes the data frame, the data are kept in data register.

In General Mode, the Decoder uses edge detection mechanism to decode data frame. It can detect each input signal edge and record the time between two edges. The time measurement result is kept in control register.

The user should set proper operation mode corresponding to the selection of remote controller.

There is a simple time-based signal Filter between the signal input and the Decoder. The Filter is programmable and helps to improve signal integrity.

14.6.5 Register Description

For the following registers:

Base_adr: 0xfe084000

Final_adr = base_adr + offset *4

The following lists describe the mapping between each IR RX/TX register and its address.

IRCTRL_IR_DEC_LDR_ACTIVE 0xfe084000

IRCTRL_IR_DEC_LDR_IDLE 0xfe084004

IRCTRL_IR_DEC_LDR_REPEAT 0xfe084008

Amlogic Proprietary and Confidential
Copyright © Amlogic. All rights reserved.

IRCTRL_IR_DEC_BIT_0 0xfe08400c
IRCTRL_IR_DEC_REG0 0xfe084010
IRCTRL_IR_DEC_FRAME 0xfe084014
IRCTRL_IR_DEC_STATUS 0xfe084018
IRCTRL_IR_DEC_REG1 0xfe08401c
IRCTRL_MF_IR_DEC_LDR_ACTIVE 0xfe084040
IRCTRL_MF_IR_DEC_LDR_IDLE 0xfe084044
IRCTRL_MF_IR_DEC_LDR_REPEAT 0xfe084048
IRCTRL_MF_IR_DEC_BIT_0 0xfe08404c
IRCTRL_MF_IR_DEC_REG0 0xfe084050
IRCTRL_MF_IR_DEC_FRAME 0xfe084054
IRCTRL_MF_IR_DEC_STATUS 0xfe084058
IRCTRL_MF_IR_DEC_REG1 0xfe08405c
IRCTRL_MF_IR_DEC_REG2 0xfe084060
IRCTRL_MF_IR_DEC_DURATN2 0xfe084064
IRCTRL_MF_IR_DEC_DURATN3 0xfe084068
IRCTRL_MF_IR_DEC_FRAME1 0xfe08406c
IRCTRL_MF_IR_DEC_STATUS1 0xfe084070
IRCTRL_MF_IR_DEC_STATUS2 0xfe084074
IRCTRL_MF_IR_DEC_REG3 0xfe084078
IRCTRL_MF_IR_DEC_FRAME_RSV0 0xfe08407c
IRCTRL_MF_IR_DEC_FRAME_RSV1 0xfe084080
IRCTRL_MF_IR_DEC_FILTE 0xfe084084
IRCTRL_MF_IR_DEC_IRQ_CTL 0xfe084088
IRCTRL_MF_IR_DEC_FIFO_CTL 0xfe08408c
IRCTRL_MF_IR_DEC_WIDTH_NEW 0xfe084090
IRCTRL_MF_IR_DEC_REPEAT_DET 0xfe084094
IRCTRL_IR_DEC_DEMOD_CNTL0 0xfe0840c0
IRCTRL_IR_DEC_DEMOD_CNTL1 0xfe0840c4
IRCTRL_IR_DEC_DEMOD_IIR_THD 0xfe0840c8
IRCTRL_IR_DEC_DEMOD_THD0 0xfe0840cc
IRCTRL_IR_DEC_DEMOD_THD1 0xfe0840d0
IRCTRL_IR_DEC_DEMOD_SUM_CNT0 0xfe0840d4
IRCTRL_IR_DEC_DEMOD_SUM_CNT1 0xfe0840d8
IRCTRL_IR_DEC_DEMOD_CNT0 0xfe0840dc
IRCTRL_IR_DEC_DEMOD_CNT1 0xfe0840e0
IRCTRL_IR_BLASTER_ADDR0 0xfe08410c
IRCTRL_IR_BLASTER_ADDR1 0xfe084110

Amlogic Proprietary and Confidential
Copyright © Amlogic. All rights reserved.

IRCTRL_IR_BLASTER_ADDR2 0xfe084114

IRCTRL_IR_BLASTER_ADDR3 0xfe084118

Table 14-82 IRCTRL_IR_BLASTER_ADDR0

Bit(s)	R/W	Default	Description
31-27	R	0	unused
26	R	-	BUSY: If this bit is 1, then the IR Blaster module is busy.
25	R	-	This output is 1 when the FIFO is Full
24	R	-	This output is 1 when the FIFO is Empty
23-16	R	-	FIFO Level
15-14	R/W	0	Unused
13-12	R/W	0	MODULATOR_TB: This input controls the clock used to create the modulator output. The modulator is typically run between 32khz and 56khz. The modulator output will equal a divided value of the following: 00: system clock “clk” 01: mpeg_xtal3_tick 10: mpeg_1uS_tick 11: mpeg_10uS_tick
11-4	R/W	0	SLOW_CLOCK_DIV: This is a divider value used to divide down the input “clk”. The divider is N+1 so a value of 0 equals divide by 1.
3	R/W	0	SLOW_CLOCK_MODE: Set this signal high to use a special mode in which the “clk” input is driven by a slow clock less than 1Mhz. This is used for low power cases where we want to run the IR Blaster between 32khz and 1Mhz
2	R/W	0	INIT_LOW: Setting this bit to 1 initializes the output to be high. Please set this bit back to 0 when done
1	R/W	0	INIT_LOW: Setting this bit to 1 initializes the output to be low. Please set this bit back to 0 when done
0	R/W	0	ENABLE: 1 = Enable. If this bit is set to 0, then the IR blaster module is reset and put into an IDLE state.

Table 14-83 IRCTRL_IR_BLASTER_ADDR1

Bit(s)	R/W	Default	Description
31-28	R/W	0	unused
27-16	R/W	0	This value is used with “modulator_tb[1:0]” above to create a low pulse. The time is computed as (mod_lo_count+1) x modulator_tb. The purpose for having a low/high count is the modulator output might not be 50% duty cycle. Hi/Lo counters allow us to modulate using a non-50% duty cycle waveform.
15-12	R/W	0	Unused
11-0	R/W	0	This value is used with “modulator_tb[1:0]” above to create a high pulse. The time is computed as (mod_hi_count+1) x modulator_tb

Table 14-84 IRCTRL_IR_BLASTER_ADDR2

Bit(s)	R/W	Default	Description
31-17	R	0	unused
16	W	0	Set this bit to 1 to write the data below to the FIFO

Amlogic Proprietary and Confidential
Copyright © Amlogic. All rights reserved.

Bit(s)	R/W	Default	Description
15-12	R	0	Unused
11-0	R/W	0	FIFO data to be written: Bit[12] output level (or modulation enable/disable: 1 = enable) Bit[11:10] Timebase: 00 = 1uS 01 = 10uS 10 = 100uS 11 = Modulator clock Bit[9:0] Count of timebase units to delay

Table 14-85 IRCTRL_IR_BLASTER_ADDR3

Bit(s)	R/W	Default	Description
31-17	R	0	unused
16	R	0	fifo thd pending
8	R/W	0	FIFO irq enable
7:0	R/W	0	FIFO irq threshold.

Table 14-86 IRCTRL_IR_DEC_DEMOD_CNTL0

Bits	R/W	Default	Description
31	R/W	0	Ir demodulor soft_reset:write 1 to reset ir_demodulor,will auto clr to 0
30	R/W	0	Reg_ir_fd_reset :It is used to reset the carrier detection module.write 1 to reset , will auto clr to 0
29	R/W	0	Reg_ir_demod_mode:It is uset to set the demod mode. 0 = count mode; 1 = iir mode.
28	R/W	0	Ir demodulor clk gate bypass:write 1 will bypass clk gate,default is 0
27:16	R/W	0x40	Reg_ir_st_cnt_thd:It is used to set the statistics number for carrier detection.
15:8	R/W	8	Reg_ir_ds_rate:It is uset to set the downsample rate.
7:4	R/W	7	Reg_ir_fsft_1:It is used to set the shift value for input data “1”.
3:0	R/W	9	Reg_ir_fsft_0:It is used to set the shift value for input data “0”.

Table 14-87 IRCTRL_IR_DEC_DEMOD_CNTL1

Bits	R/W	Default	Description
31	R/W	0	Reg_ir_demod_en:ir demod enable ,
30	R/W	0	Reg_ir_invt:ir input invert, invert input at 1.
29:16	R/W	0xa	Reg_ir_proctect1:It is used to set the protection threshold for 1. It is used to filter the glitch.
13:0	R/W	0x3e8	Reg_ir_detect0:It is used to set the detection threshold for signal “0”.

Amlogic Proprietary and Confidential
Copyright © Amlogic. All rights reserved.

Table 14-88 IRCTRL_IR_DEC_DEMOD_IIR_THD

Bits	R/W	Default	Description
31:16	R/W	0xdac	Reg_ir_iir_thd1:It is used to set the detection threshold for “1” in iir mode.
15:0	R/W	0xdac	Reg_ir_iir_thd0:It is used to set the detection threshold for “0” in iir mode.

Table 14-89 IRCTRL_IR_DEC_DEMOD_THD0

Bits	R/W	Default	Description
29:16	R/W	0x12c	Reg_ir_thd0_low:It is used to set the low threshold for “0” when statistics.
13:0	R/W	0x1770	Reg_ir_thd0_high:It is used to set the high threshold for “0” when statistics.

Table 14-90 IRCTRL_IR_DEC_DEMOD_THD1

Bits	R/W	Default	Description
29:16	R/W	0x12c	Reg_ir_thd1_low:It is used to set the low threshold for “1” when statistics.
13:0	R/W	0x1770	Reg_ir_thd1_high:It is used to set the high threshold for “1” when statistics.

Table 14-91 IRCTRL_IR_DEC_DEMOD_SUM_CNT0

Bits	R/W	Default	Description
25:0	R	0	Ro_ir_sum_cnt0:It is used to report the sum value for the statistics data “0”.

Table 14-92 IRCTRL_IR_DEC_DEMOD_SUM_CNT1

Bits	R/W	Default	Description
25:0	R	0	Ro_ir_sum_cnt1:It is used to report the sum value for the statistics data “1”

Table 14-93 IRCTRL_IR_DEC_DEMOD_CNT0

Bits	R/W	Default	Description
29:16	R	0	Ro_ir_max_cnt0:It is used to report the maximum value for the statistics data “0”.
13:0	R	0	Ro_ir_min_cnt0:It is used to report the minimum value for the statistics data “0”.

Table 14-94 IRCTRL_IR_DEC_DEMOD_CNT1

Bits	R/W	Default	Description
29:16	R	0	Ro_ir_max_cnt1:It is used to report the maximum value for the statistics data “1”.
13:0	R	0	Ro_ir_min_cnt1:It is used to report the minimum value for the statistics data “1”.

Amlogic Proprietary and Confidential
Copyright © Amlogic. All rights reserved.

Table 14-95 IRCTRL_IR_DEC_LDR_ACTIVE: Leader Active Time

Bit(s)	R/W	Default	Description
31-29	R	0	unused
28-16	R/W	0x 1d8	Max Leader ACTIVE time: 9.44mS assuming base rate = 20uS
15-13	R	0	unused
12-0	R/W	0x1ac	Min Leader ACTIVE time: 8.56mS assuming base rate = 20uS

This register controls the min/max leader active time window. For most TV remote controls, the leader active time is about 9mS. The values in this register correspond to counts of the base rate programmed by register 0x2124

Table 14-96 IRCTRL_IR_DEC_LDR_IDLE: Leader Idle Time

Bit(s)	R/W	Default	Description
31-26	R	0	unused
28-16	R/W	0xf8	Max Leader IDLE time: 4.96mS assuming base rate = 20uS
15-13	R	0	unused
12-0	R/W	0xca	Min Leader IDLE time: 4.04mS assuming base rate = 20uS

This register controls the min/max leader IDLE time window. For most TV remote controls, the leader idle time is about 4.5mS. The values in this register correspond to counts of the base rate programmed by register: 0x2124

Table 14-97 IRCTRL_IR_DEC_LDR_REPEAT: Repeat Leader Idle Time

Bit(s)	R/W	Default	Description
31-26	R	0	Unused
25-16	R/W	0x7a	Max REPEAT Leader IDLE time: 2.44mS assuming base rate = 20uS
15-10	R	0	unused
9-0	R/W	0x66	Min REPEAT Leader IDLE time: 2.04mS assuming base rate = 20uS

This register controls the repeat leader IDLE time window. The repeat key uses the standard leader active time (9ms) but a shorter leader idle time.

Table 14-98 IRCTRL_IR_DEC_BIT_0: BIT 0 Identification Time

Bit(s)	R/W	Default	Description
31-26	R	0	Unused
25-16	R/W	0x42	Max BIT 0 time: 1.32mS assuming base rate = 20uS
15-10	R	0	Unused
9-0	R/W	0x2e	Min BIT 0 time: 0.92mS assuming base rate = 20uS

This register controls the min/max BIT 0 time window. For most TV remote controls, the bit 0 time is about 1.125mS. The values in this register correspond to counts of the base rate programmed by register: 0x2124

Amlogic Proprietary and Confidential
Copyright © Amlogic. All rights reserved.

Table 14-99 IRCTRL_IR_DEC_REG0: Base Rate Generator

Bit(s)	R/W	Default	Description
31	R	0	Just in case bit. Normally this bit is set to 0 so that the auto-clock gating is enabled. If there is a problem related to the auto-clock gating, then this bit can be set to one to disable the auto-clock gating.
30-28	R/W	0	FILTER_COUNT: This is a new feature to Nike. The IR remote input now has a simple filter that accommodates slow rise times by providing a little hysteresis. The logic works as follows. If the input is low, then an input signal will only be considered HIGH if it remains high for (FILTER_COUNT * 111nS). Similarly, if the input is currently high, it will only be considered LOW if the input signal remains low for (FILTER_COUNT * 111nS).
27-25	R	0	Unused
24-12	R/w	0xFA0	Max Frame Time. 80mS assuming base rate = 20uS This value is used to determine if a code is a repeat code (e.g. leader followed by no data for this amount of time). This value can also be used to catch slow remote codes (i.e. code sequences that are longer than expected).
11-0	R/W	0x13	This value dictates the base rate time for all measurements associated with the IR decoder. In the past, the base rate was divided from the system clock. In the current design, the base rate is divided from a fixed 1uS timer. This 1uS timer is constant and doesn't change (even when the system clock does) Base rate = (count + 1) * 1uS

This register controls the master rate generator for all width measurements made by the IR decoder module.

Table 14-100 IRCTRL_IR_DEC_FRAME: Frame Data

Bit(s)	R/W	Default	Description
31-0	R	0	Frame Data. Format: {custom code, ~custom code, data, ~data}

Note

New keys will be ignored until this register is read if the hold first key bit is set in the decode control register. Reading this register resets an internal hold first flag.

Table 14-101 IRCTRL_IR_DEC_STATUS: Frame Status

Bit(s)	R/W	Default	Description
31	R/W	0	Sim faster: Reserved
30	R/W	0	BIT_1_MATCH_EN: Set this bit to 1 to enable qualification of bit 1 times. In the previous IR decoder module, frame detection only looked at the BIT 0 time to identify a zero bit. If a zero bit time wasn't found, then it was assumed that the bit was a 1. In the updated IR decoder module, the module will look at the BIT 0 time to find zero bits, and the BIT 1 time to find 1 bits. If the width of a pulse doesn't match the zero or the one bit width time, then the frame is considered invalid.
29-20	R/W	0x89	Max BIT 1 time: 2.74mS assuming base rate = 20uS
19-10	R/W	0x57	Min BIT 1 time: 1.74mS assuming base rate = 20uS
9	R	-	IRQ Status. 1 if there is an interrupt
8	R	-	IR Decoder input. This is the level of the digital signal coming into the IR module for decoding. This is the same as reading the I/O pad level.
7	R	-	BUSY. 1 if the decoder isbusy

Amlogic Proprietary and Confidential
Copyright © Amlogic. All rights reserved.

Bit(s)	R/W	Default	Description
6-4	R	0	Decoder Status: For debug only 000: OK 001: last frame timed out 010: leader time error (invalid IR signal) 011: repeat error (repeat leader, but other IR transitions found). 100: Invalid bit
3-0	R	0	Frame Status Bit 3: Frame data valid Bit 2: data code error (data != ~data in IR bit stream) Bit 1: custom code error (custom_code != ~custom_code in IR bit stream) Bit 0: 1 = repeat key, 0 = standard key

Table 14-102 IRCTRL_IR_DEC_REG1: Decode / Interrupt Control

Bit(s)	R/W	Default	Description
31	R	0	Unused
30	R/W	0	CNTL_1uS_EQ_CLK: This bit should be set to 1 if the clk81 (system clock) is less than 50 Mhz.
29	R/W	0	CNTL_111nS_EQ_CLK: This bit should be set to 1 if the clk81 (system clock) is less than 50 Mhz.
28-16	R	0	Time measurement since the last time the internal time counter was reset by the rising and/or falling edge of the IR signal. The selection of reset on rising and/or falling edge is determined by the selection of the IRQ (Bits 3-2 below)
15	R/W	1	ENABLE: If this bit is 1, then the state-machines are enabled. If this bit is zero, then the state-machines cleanup and immediately return to idle.
14	R/W	0	USE SYSTEM CLOCK: This is a new feature. 1 = use the system clock, 0 = use the 1uS timebase tick. During normal operation, the module is setup to create a 20uS tick from the 1uS internal timebase of the chip. If the chip is configured to operate using the 32khz RTC oscillator, the 1uS timebase is invalid and therefore the 20uS timebase is invalid. In order to measure time correctly, the IR remote circuit can use the system clock (which in this case is the 32khz oscillator clock) as the master timebase.
13-9	R/W	1f	Number of bits in the IR frame (N-1)
8-7	R/W	0	Decoder mode 00: NEC Frames: Decode Leader and 32 bits 01: Only accumulate bits (skip the leader) 10: Measure Mode: The internal width measuring counter is reset on the rising and/or falling edge of the IR remote signal based on the settings of IRQ Selection below. Just before being reset, the measured width is captured and stored so that it can be read in bits [28:16] of this register. 11: NEC Frames: Decode Leader and 32 bits
6	R/W	1	Hold First Key. If this bit is set true, then the frame data register (0x2125) will only be updated if hasn't already been updated. Once updated, the frame data register will not be updated again until it has been read. This bit can be used to guarantee the first TV remote code captured will not be overwritten by subsequent transmissions from a TV remote. NOTE: You must read the frame data register to clear an internal hold first flag if this bit is set.
5-4	R/W	11	Frame mask. These bits are used to qualify frames for capture. 00: Capture all frames good or bad 01: Capture only frames where data=~data. Ignore custom codes 10: Capture only frames where custom_code = ~custom_code. Ignore data codes 11: Capture only frames where (data=~data) and (custom_code = ~custom_code)
3-2	R/W	0	IRQ Selection and width measurement reset:

Amlogic Proprietary and Confidential
Copyright © Amlogic. All rights reserved.

Bit(s)	R/W	Default	Description
			00: IR Decoder done 01: IR input rising or falling edge detected 10: IR input falling edge detected 11: IR rising edge detected
1	R/W	0	IR Polarity. Polarity of the input signal (VD[0])
0	R/W	0	Set to 1 to reset the IR decoder. This is useful because the IR remote state machine thinks in terms of milliseconds and may take tens of milliseconds to return to idle by itself.

Table 14-103 IRCTRL_MF_IR_DEC_LDR_ACTIVE

Bit(s)	R/W	Default	Description
28:16	R/W	0	Max duration of Leader's active part (The value is in unit of $\mathbf{T}_{RATE}$)
12:0	R/W	0	Min duration of Leader's active part (The value is in unit of $\mathbf{T}_{RATE}$)

Table 14-104 IRCTRL_MF_IR_DEC_LDR_IDLE: Leader Idle control

Bit(s)	R/W	Default	Description
28:16	R/W	0	Max duration of Leader's idle part
12:0	R/W	0	Min duration of Leader's idle part

Table 14-105 IRCTRL_MF_IR_DEC_LDR_REPEAT: Repeat Leader Idle Time

Bit(s)	R/W	Default	Description
25:16	R/W	0	Max duration of Repeat Code's Leader. In NECformat, it defines for the repeat leader's idle part. In Toshiba format, it defines for the repeat leader's second idle part (In Toshiba format, the repeat leader's first idle part has the same duration time as the normal leader idle part.)
9:0	R/W	0	Min duration of Repeat Code's Leader

Table 14-106 IRCTRL_MF_IR_DEC_BIT_0

Bit(s)	R/W	Default	Description
25:16	R/W	0	Max duration of Duration Setting Regiser 0. It defines max tining duration for: Logic"0" for NEC/Toshiba/Sony/Thomas format or Half trailer bit for RC6 format (RC6's half trailer bit typically 888.89us) or time of Duokan/RCMM/4ppm format's Logic "00"
9:0	R/W	0	Min duration of Duration Setting Regiser 0.

Amlogic Proprietary and Confidential
Copyright © Amlogic. All rights reserved.

Table 14-107 IRCTRL_MF_IR_DEC_REG0

Bit(s)	R/W	Default	Description
31	R/W	0	Clock gating control just in case. Set 1 can force clock gating disabled.
30:28	R/W	0	Filter ctrl. Set the monitor timing for input filter, bigger value means longer monitor time. Value 0 = no filtering.
27:25	R	0	Unused
24:12	R/W	0	Max frame time. Max duration of one whole frame.
11:0	R/W	0	Base time parameter. Used to generate the timing resolution. Resolution = (base_time_paramter + 1) * (1/ Freq_sys_clk). For example, if Frequency of sys_clk is 1Mhz, and base_time_parameter=19, Then resolution = (19+1)*(1uS) = 20uS.

Table 14-108 IRCTRL_MF_IR_DEC_FRAME

Bit(s)	R/W	Default	Description
31:0	R/W	0	32 bit Read-Only register stores frame body (LSB 32bit) captured from IR remote data flow, commonly includes custom/address code and data code.

Table 14-109 IRCTRL_MF_IR_DEC_STATUS

Bit(s)	R/W	Default	Description
31	R/W	0	Frame data valid 1. (This bit is set to 1 when a captured frame is updated/stored into “FrameBody_1” register. A read of “FrameBody_1” register will clear This bit. “FrameBody_1” register is used to store the over 32bit MSBs of the formats whose length is more than 32 bit)
30	R/W	0	bit_1_match_en. Set to 1 to enable the check of whether logic”1” bit matches timing configure during the frame input process.
29:20	R/W	0	Max Duration 1. Max duration of Duration Setting Regiser 1. It defines max duration for: Logic”1” for NEC/Toshiba/Sony format or Whole trailer bit for RC6 format (RC6’s whole trailer bit typically 1777.78us) or time of Duokan/RCMM/4ppm format’s Logic “01”
19:10	R/W	0	Min Duration 1. Min duration of Duration Setting Regiser 1.
9	R	0	irq_status. Appear as 1 if there is an interrupt.
8	R	0	ir_i_sync. IR remote serial input after synchronization. This is the level of the digital signal coming into the IR module for decoding. This is the same as reading the I/O pad level.
7	R	0	Busy. When =1, means state machine is active.

Amlogic Proprietary and Confidential
Copyright © Amlogic. All rights reserved.

Bit(s)	R/W	Default	Description
6:4	R	0	Decoder_status (for debug only). 000: OK 001: last frame timed out 010: leader time error (invalid IR signal) 011: repeat error (repeat leader, but other IR transitions found). 100: Invalid bit
3:0	R	0	Frame status. bit 3: Frame data valid (This bit is set to 1 when a captured frame is updated/stored into “FrameBody” register. A read of “FrameBody” register will clear This bit. If store and read occurs at the same time, This bit is set to 1 in common, But if “Hold first” is set to true and this valid Bit is already 1, a read clear takes precedance and This bit is clear to 0.) bit 2: data code error (data != ~data in IR bit stream) bit 1: custom code error (custom_code != ~custom_code in IR bit stream) bit 0: 1 = received frame is repeat key, 0 = received frame is normal key

Table 14-110 IRCTRL_MF_IR_DEC_REG1

Bit(s)	R/W	Default	Description
31	R/W	0	Set to 1 to use faster timebase. .
30	R/W	0	cntl_1us_eq_clk. Just use sys_clk to relace 1uS tick.
29	R/W	0	cntl_xtal3_eq_clk. Just use sys_clk to relace 111ns tick.
28:16	R	0	Pulse Width Counter. It stores the internal counter of pulse width duration. Commonly used as time measurement when decode_mode is set to measure width mode (software decode). Time measurement starts at the last time the internal time counter was reset by the rising and/or falling edge of the IR signal. The selection of reset on rising and/or falling edge is determined by the IRQ Selection field (Bits 3-2 below)
15	R/W	0	Enable. 1 = enable the state machine of IR decoder. 0 = disable the state machine of IR decoder.
14	R/W	0	cntl_use_sys_clk. Use sys_clk for the timebase. It’s useful when sys_clk at low frequency (such as 32Khz) and cannot create 1uS timebase tick. 1 = use the system clock as timebase. 0 = use the 1uS timebase tick as timebase.
13:8	R/W	0	bit_length minus 1. (N-1). Used to set the value of frame body’s bit length (frame body commonly includes address and data code part). If a format has 24 bit frame body, this value shall be set to 23.
7	R/W	0	Record_at_error. 1= record the frame body and status forcibly, even if data/custom code error check enabled by frame_mask and relative error occurs. 0 = if data/custom code error check enabled by frame_mask and relative error occurs, not record the frame body and status forcibly
6	R/W	0	Hold_first Used to hold the first captured frame data. If This bit is set to 1, then the “Frame-Body/FrameBody_1” register will only be updated if hasn’t already been updated. Once updated, the “FrameBody/FrameBody_1” register will not be updated again until it has been read. This bit can be used to guarantee the first TV remote code captured will not be overwritten by subsequent transmissions from a TV remote. NOTE: Read the”FrameBody” register can clear the internal “Frame data valid” flag, and read the “FrameBody_1” register can clear the “Frame data valid 1” flag.
5:4	R/W	0	Frame_mask.

Amlogic Proprietary and Confidential
Copyright © Amlogic. All rights reserved.

Bit(s)	R/W	Default	Description
			Some formats' body include bit-inversed data or custom/address code for error check. 00 = ignore error check from either data or custom/address code 01= check if data code matches its inverse values, ignore error check from custom/address code 10= check if custom/address code matches its inverse values, ignore error check from data code 11= check if data and custom codes match their inverse values
3:2	R/W	0	Irq_sel. IRQ Selection and width measurement reset: 00: IR Decoder done 01: IR input rising or falling edge detected 10: IR input falling edge detected 11: IR rising edge detected
1	R/W	0	IR input polarity selection. Used to adjust/invert the polarity of IR input waveform.
0	R/W	0	Decoder Reset. Set to 1 to reset the IR decoder. This is useful because the IR remote state machine thinks in terms of milliseconds and may take tens of milliseconds to return to idle by itself.

Table 14-111 IRCTRL_MF_IR_DEC_REG2

Bit(s)	R/W	Default	Description
26	R/W	0	Width_low_enable. Enable counter record of low pulse width duration. 0 = do not force enable of width low counter record 1 = force enable of width low counter record Some IR formats' decoding need to use internal width low counter record. By default, the width low counter record is enabled automatically for related formats. This bit is used for enable forcibly just in case. Besides, if "leader plus stop bit" method is enabled for repeat detection, this bit is also need to be enabled.
25	R/W	0	Width_high_enable. Enable counter record of high pulse width duration. 0 = do not force enable of width high counter record 1 = force enable of width high counter record Some IR formats' decoding need to use internal width high counter record. By default, the width high counter record is enabled automatically for related formats. This bit is used for enable forcibly just in case.
24	R/W	0	Enable "leader plus stop bit" method for repeat detection . 0 = "leader plus stop bit" method disabled 1 = "leader plus stop bit" method enabled Some IR formats use one normal frame's leader followed by a stop bit to represet repeat. There is no frame data in this kind repeat frame. To use this method, width_low_enable (bit[26] of 0x20 offset register) shall be set to 1, and max_duration_3 and min_duration_3 in 0x28 offset register shall be set to appropriate value for stop bit's timing duration.
21:16	R/W	0	Repeat_bit_index. These bits are used for compare bit method to set the index of the bit that is used as repeat flag. The index value can be 0 to 63. Compare bit method is one of the methods for repeat detection . Some IR formats use one bit in frame to represet whether the frame is repeat.
15	R/W	0	Running_count_tick_mode. This bit is only valid when use_clock_to_counter bit is 0. 0 = use 100uS as increasing time unit of frame-to-frame counter 1 = use 10uS as increasing time unit of frame-to-frame counter
14	R/W	0	Use_clock_to_counter. If this bit is set to 1, the running_count_tick_mode bit is ignored. 0 = do not use system clock as increasing time unit of frame-to-frame counter 1 = use system clock as increasing time unit of frame-to-frame counter

Amlogic Proprietary and Confidential
Copyright © Amlogic. All rights reserved.

Bit(s)	R/W	Default	Description
13	R/W	0	Enable frame-to-frame time counter (running-counter). 0 = frame-to-frame time counter disabled 1 = frame-to-frame time counter enabled If enabled, the frame-to-frame counter increases every 100uS or 10uS until it reaches its max value(all bits are 1) or it is reset. When it reaches its max value, it keeps the value until it is reset. When it is reset, it becomes zero and then begin increasing again. The counter can be reset even when it has not reached its max value. The increasing time unit can be 100uS or 10uS or system clock frequency which is set by running_count_tick_mode and use_clock_to_counter settings. When a frame's data are capured and stored into FrameBody/FrameBody_1 register, frame-to-frame counter is reset to zero. After reset to zero, the frame-to-frame counter will begin increasing again, until it reaches its max value or it is reset. For repeat frame detection, users can use hardware detection by enabling compare frame or compare bit method, or users can read frame-to-frame counter to let software to make the decision.
12	R/W	0	Enable repeat time check for repeat detection . This bit is valid only when compare frame method or compare bit method is enabled. 0 = repeat time check disabled 1 = repeat time check enabled When repeat frame detection is enabled by enabling compare frame or compare bit method, the frame time interval may need to be checked in order to decide whether the frames are repeat (key pressed without release) or not. You can configure the repeat_time_max value by setting 0x38 offset register. If frame interval is smaller than the "repeat time max", it may considered as repeat. If frame interval is bigger than the "repeat time max", it is considered as not repeat.
11	R/W	0	Enable compare frame method for repeat detection . 0 = compare frame method disabled 1 = compare frame method enabled Some IR formats transer the same data frame as repeat frame when the key is kept pressed without release. For repeat detection, compare frame method can be used. If a new frame and the old received frame are the same and the repeat time is under the limit(frame-to-frame time counter value is smaller than the repeat_time_max), the status register's frame_status[0] is set to 1 automatically as repeat detected flag. You can configure the repeat_time_max value by setting 0x38 offset register.
10	R/W	0	Enable compare bit method for repeat detection . 0 = compare bit method disabled 1 = compare bit method enabled Some IR formats use only one bit to represet whether the frame is repeat. You can compare only one bit instead of compare the whole frame for repeat detection. If compare frame method is enabled, then this bit is ignored.
9	R/W	0	Disable read-clear of FrameBody/FrameBody_1. 0 = read-clear enabled 1 = read-clear disabled FrameBody/FrameBody_1 registers are read-cleared in default. When these register are read, they are cleared to zero. This bit is used to disable this read-clear feature. (FrameBody/FrameBody_1 registers are used to store captured frame data).

Amlogic Proprietary and Confidential
Copyright © Amlogic. All rights reserved.

Bit(s)	R/W	Default	Description
8	R/W	0	input stream bit order. 0 = LSB first mode (first bit in input stream is considered as LSB) 1= MSB first mode (first bit in input stream is considered as MSB) Note: Commonly the following formats shall set 1 to enable MSB first mode (unless you insist on LSBfirst mode for your specified use): RC5, RC5 extend, RC6, RCMM, Duokan, Comcast
3:0	R/W	0	Decode_mode.(format selection) 0x0 =NEC 0x1= skip leader (just bits, without leader) 0x2=General time measurement (measure width, software decode) 0x3=MITSUBISHI or 50560 0x4=Thomson 0x5=Toshiba 0x6=Sony SIRC 0x7=RC5 0x8=Reserved 0x9=RC6 0xA=RCMM 0xB=Duokan 0xC=Reserved 0xD=Reserved 0xE=Comcast 0xF=Sanyo

Table 14-112 IRCTRL_MF_IR_DEC_DURATN2

Bit(s)	R/W	Default	Description
31:26	R	0	Unused
25:16	R/W	0	Max duration of Duration Setting Regiser 2. It defines max duration for: Half bit for RC5/6 format (RC5 typically 888.89us for half bit, RC6 typically 444.44us) or time of Duokan/RCMM/4ppm format's Logic "10" or time of Comcast/16ppm's base duration
15:10	R	0	Unused
9:0	R/W	0	Min duration of Duration Setting Regiser 2.

Table 14-113 IRCTRL_MF_IR_DEC_DURATN3

Bit(s)	R/W	Default	Description
31:26	R	0	Unused
25:16	R/W	0	Max duration of Duration Setting Regiser 3. It defines max duration for: Whole bit for RC5/6 format (RC5 typically 1777.78us for whole bit, RC6 typically 888.89us) or time of Duokan/RCMM/4ppm format's Logic "11" or time of Comcast/16ppm's offset duration
15:10	R	0	Unused
9:0	R/W	0	Min duration of Duration Setting Regiser 3.

Amlogic Proprietary and Confidential
Copyright © Amlogic. All rights reserved.

Table 14-114 IRCTRL_MF_IR_DEC_FRAME1: Frame Body 1 (Frame Data, MSB 32Bit)

Bit(s)	R/W	Default	Description
31:0	R	0	Stores frame body excess 32 bit range. (MSB 32 bit)

Note

New keys will be ignored until **FrameBody** register is read if the hold first key Bit is set in the decode control register. Reading this register resets an internal frame data valid flag.

Table 14-115 IRCTRL_MF_IR_DEC_STATUS_1

Bit(s)	R/W	Default	Description
31:20	R	0	Unused
19:0	R	0	Stores the last frame-to-frame counter value before the last counter reset caused by the last frame data record/update.

Table 14-116 IRCTRL_MF_IR_DEC_STATUS_2

Bit(s)	R/W	Default	Description
31:20	R	0	Unused
19:0	R	0	Stores the value of the frame-to-frame counter which is running currently.

Table 14-117 IRCTRL_MF_IR_DEC_REG3

Bit(s)	R/W	Default	Description
19:0	R/W	0	Repeat time max. Used to set the maximum time between two repeat frames for repeat frame detection. Time unit is 100uS or 10uS according to the running_count_tick_mode. When repeat frame detection is enabled by enabling compare frame or compare bit method, the frame time interval may need to be checked in order to decide whether the frames are repeat (key pressed without release) or not. If frame interval is smaller than the “repeat time max”, it may considered as repeat. If frame interval is bigger than the “repeat time max”, it is considered as not repeat.

Table 14-118 IRCTRL_MF_IR_DEC_FRAME_RSV0

Bit(s)	R/W	Default	Description
31:0	R/W	0	Frame Reserved register 0. Stores the LSB 32bit of the previous frame’s frame data while the “*Frame_Body*” register stores the LSB 32bit of the current frame’s frame data.

Table 14-119 IRCTRL_MF_IR_DEC_FRAME_RSV1

Bit(s)	R/W	Default	Description
31:0	R/W	0	Frame Reserved register 0. Stores the LSB 32bit of the previous frame’s frame data while the “*Frame_Body*” register stores the LSB 32bit of the current frame’s frame data.

Amlogic Proprietary and Confidential
Copyright © Amlogic. All rights reserved.

Table 14-120 IRCTRL_MF_IR_DEC_FILTE

Bit(s)	R/W	Default	Description
31	R/W	0	New filter ctrl enable: 1:new filter ctrl enable 0:old filter ctrl enable
12:0	R/W	0	New Filter ctrl Set the monitor timing for input filter, bigger value means longer monitor time. Value 0 = no filtering.

Table 14-121 IRCTRL_MF_IR_DEC_IRQ_CTL

Bit(s)	R/W	Default	Description
31	R/W	0	Interrupt enable 1:remote ir will generate irq 0:remote ir will not generate irq
30	R/W	0	Repeat idle mux 1:not check input single in NEC repeat idle state in the time of repeat_dely_time 0:check single
29	R/W	0	Release status Release pending bit ,write 1 to 0
28:16	R/W	0	Repeat_dely_time The time will not check input single after repeat leader
15:14	R/W	0	reversed
13	R/W	0	Release irq enable 1:release will generate irq 0:release will not generate irq
12:0	R/W	0	Release_det_time The time to judge release after irq

Table 14-122 IRCTRL_MF_IR_DEC_FIFO_CTL

Bit(s)	R/W	Default	Description
31	R/W	0	Fifo mode enable,only use in measure mode 1:fifo mode enable 2:use old measure mode
30	R/W	0	Fifo trigger pending,write 1 to 0 Fifo have received X dates.X configured by IR_DEC_FIFO_CTL[20:13]
29	R/W	0	Fifo in timeout pending,write 1 to 0 Fifo have not received data in X.X configured by IR_DEC_FIFO_CTL[12:0]
28	R/W	0	Fifo full
27	R/W	0	Fifo empty
26	R/W	0	Fifo initial
25:21	R/W	0	revered

Amlogic Proprietary and Confidential
Copyright © Amlogic. All rights reserved.

Bit(s)	R/W	Default	Description
20:13	R/W	0	Fifo trigger irq level Default is ‘h16
12:0	RIRCTR-L_MF_/W	0	Fifo in timeout Default is ‘d800

Table 14-123 IRCTRL_MF_IR_DEC_WIDTH_NEW

Bit(s)	R/W	Default	Description
12:0	R/W	0	Width new When use fifo mode,should read width from this register

Table 14-124 IRCTRL_MF_IR_DEC_REPEAT_DET

Bit(s)	R/W	Default	Description
31	R/W	0	Repeat detect mux enable
28:16	R/W	0	Max repeat idle time
12:0	R/W	0	Min repeat idle time

14.7 Pulse-Width Modulation

14.7.1 Overview

The chip has 6 PWM modules that can be connected to various digital I/O pins. Each PWM is driven by a programmable divider driven by a 4:1 clock selector. The PWM signal is generated using two 16-bit counters. One is the High and Low counter, which is individually programmable with values between 1 and 65535. Using a combination of the divided clock (divide by N) and the HIGH and LOW counters, a wide number of PWM configurations are possible. The other is delta-sigma couter, generate 18-bit sigma, the PWM-out is the highest sigma. The PWM outputs vs counters are also illustrate below.

Figure 14-8 PWM Block Diagram

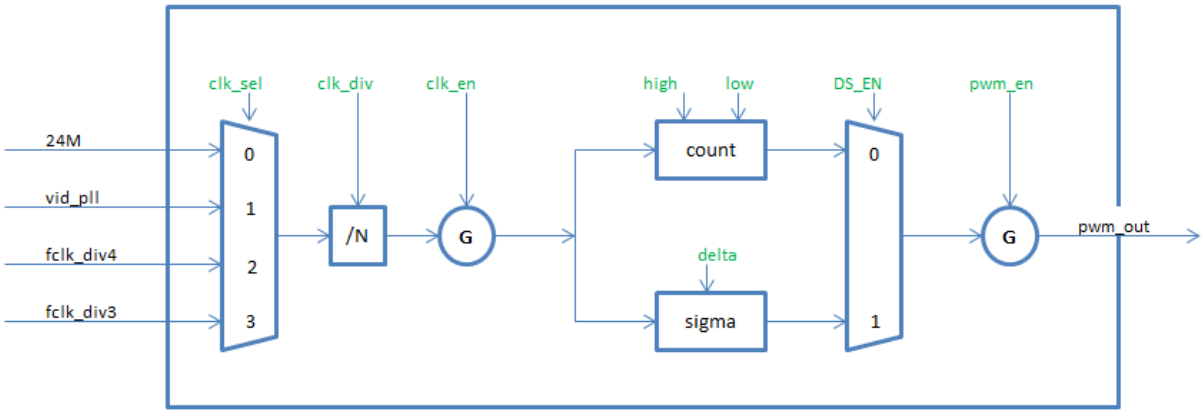

Amlogic Proprietary and Confidential
Copyright © Amlogic. All rights reserved.

Figure 14-9 High/Low Counter

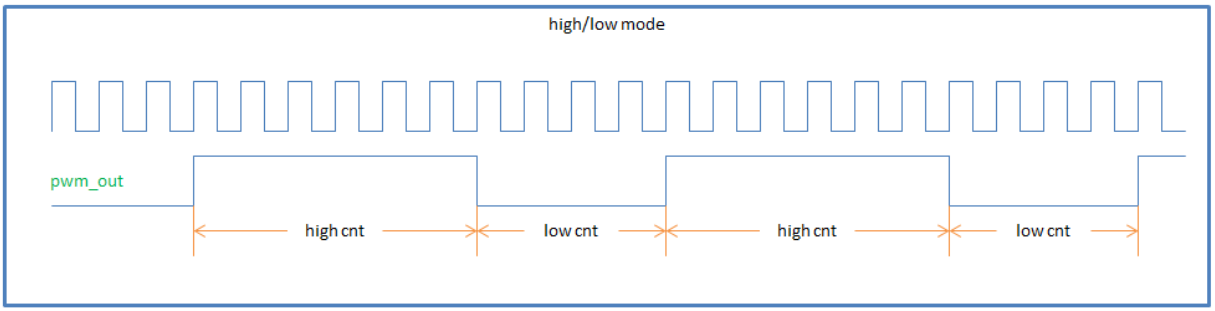

Figure 14-10 Delta-sigma Conter

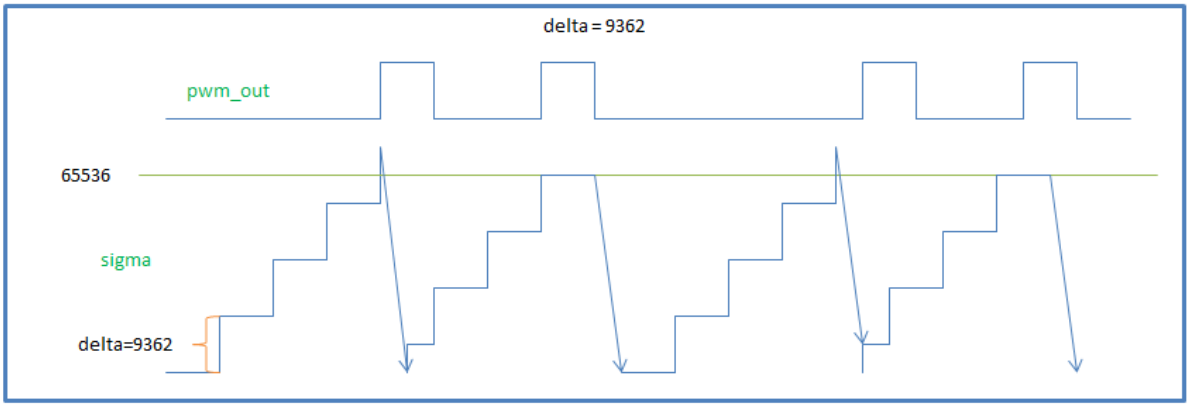

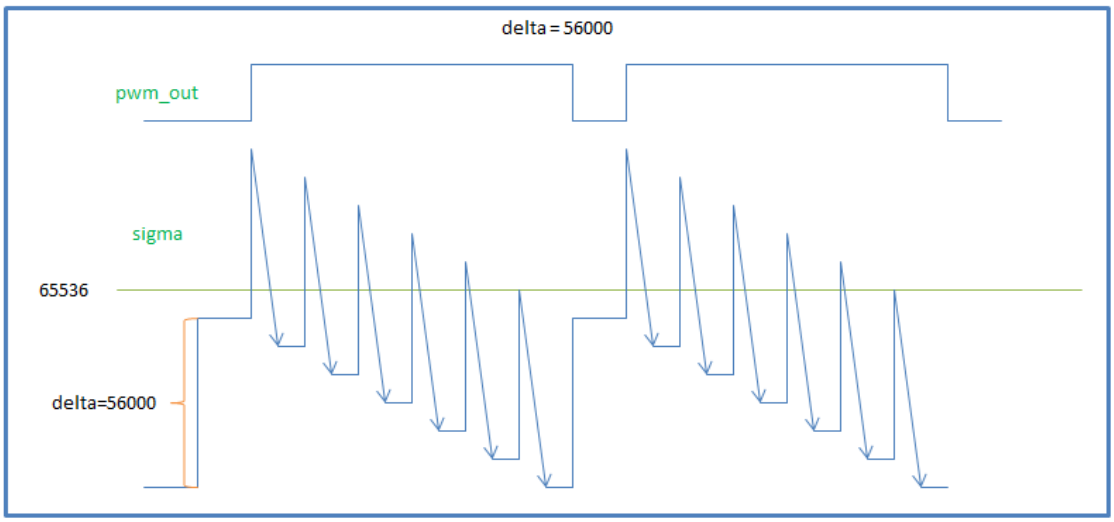

PWM 2 timer mode is illustrated as following:

Amlogic Proprietary and Confidential
Copyright © Amlogic. All rights reserved.

Figure 14-11 2 Timer Mode

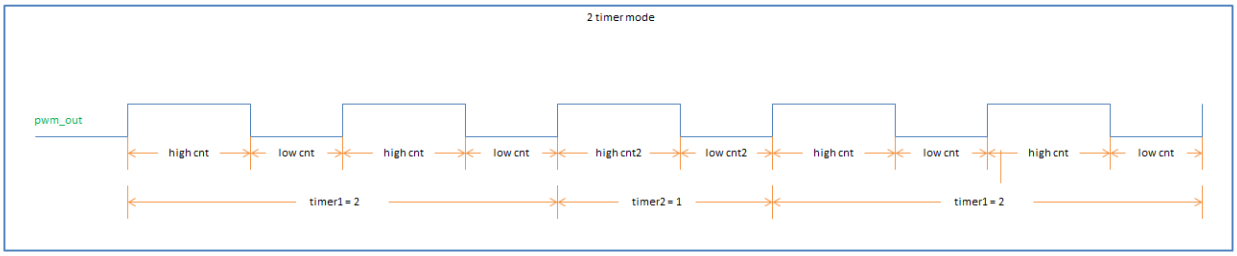

14.7.2 Register Description

Each PWM module can generate 2 PWM. PWM_CD/EF/AO_AB/AO_CD/AO_EF/AO_GHusage are the same as PWM_AB.

For the following registers:

Base_adr: 0xfe058000

Final_adr = base_adr + offset *4

The following lists describe the mapping between each PWM_AB register and its address.

- PWMAB_PWM_A 0xfe058000
- PWMAB_PWM_B 0xfe058004
- PWMAB_MISC_REG_AB 0xfe058008
- PWMAB_DELTA_SIGMA_AB 0xfe05800c
- PWMAB_TIME_AB 0xfe058010
- PWMAB_A2 0xfe058014
- PWMAB_B2 0xfe058018
- PWMAB_BLINK_AB 0xfe05801c
- PWMAB_LOCK_AB 0xfe058020
- PWMCD_PWM_A 0xfe05a000
- PWMCD_PWM_B 0xfe05a004
- PWMCD_MISC_REG_AB 0xfe05a008
- PWMCD_DELTA_SIGMA_AB 0xfe05a00c
- PWMCD_TIME_AB 0xfe05a010
- PWMCD_A2 0xfe05a014
- PWMCD_B2 0xfe05a018
- PWMCD_BLINK_AB 0xfe05a01c
- PWMCD_LOCK_AB 0xfe05a020
- PWMEF_PWM_A 0xfe05c000
- PWMEF_PWM_B 0xfe05c004
- PWMEF_MISC_REG_AB 0xfe05c008
- PWMEF_DELTA_SIGMA_AB 0xfe05c00c
- PWMEF_TIME_AB 0xfe05c010
- PWMEF_A2 0xfe05c014
- PWMEF_B2 0xfe05c018
- PWMEF_BLINK_AB 0xfe05c01c

Amlogic Proprietary and Confidential
Copyright © Amlogic. All rights reserved.

- PWMEF_LOCK_AB 0xfe05c020
- PWM_AO_AB_PWM_A 0xfe05e000
- PWM_AO_AB_PWM_B 0xfe05e004
- PWM_AO_AB_MISC_REG_AB 0xfe05e008
- PWM_AO_AB_DELTA_SIGMA_AB 0xfe05e00c
- PWM_AO_AB_TIME_AB 0xfe05e010
- PWM_AO_AB_A2 0xfe05e014
- PWM_AO_AB_B2 0xfe05e018
- PWM_AO_AB_BLINK_AB 0xfe05e01c
- PWM_AO_AB_LOCK_AB 0xfe05e020
- PWM_AO_CD_PWM_A 0xfe060000
- PWM_AO_CD_PWM_B 0xfe060004
- PWM_AO_CD_MISC_REG_AB 0xfe060008
- PWM_AO_CD_DELTA_SIGMA_AB 0xfe06000c
- PWM_AO_CD_TIME_AB 0xfe060010
- PWM_AO_CD_A2 0xfe060014
- PWM_AO_CD_B2 0xfe060018
- PWM_AO_CD_BLINK_AB 0xfe06001c
- PWM_AO_CD_LOCK_AB 0xfe060020
- PWM_AO_EF_PWM_A 0xfe030000
- PWM_AO_EF_PWM_B 0xfe030004
- PWM_AO_EF_MISC_REG_AB 0xfe030008
- PWM_AO_EF_DELTA_SIGMA_AB 0xfe03000c
- PWM_AO_EF_TIME_AB 0xfe030010
- PWM_AO_EF_A2 0xfe030014
- PWM_AO_EF_B2 0xfe030018
- PWM_AO_EF_BLINK_AB 0xfe03001c
- PWM_AO_EF_LOCK_AB 0xfe030020
- PWM_AO_GH_PWM_A 0xfe032000
- PWM_AO_GH_PWM_B 0xfe032004
- PWM_AO_GH_MISC_REG_AB 0xfe032008
- PWM_AO_GH_DELTA_SIGMA_AB 0xfe03200c
- PWM_AO_GH_TIME_AB 0xfe032010
- PWM_AO_GH_A2 0xfe032014
- PWM_AO_GH_B2 0xfe032018
- PWM_AO_GH_BLINK_AB 0xfe03201c
- PWM_AO_GH_LOCK_AB 0xfe032020

Table 14-125 PWMAB_PWM_A

Bit(s)	R/W	Default	Description
31-15	R/W	134	PWM_A_HIGH: This sets the high time (in clock counts) for the PWM_A generator output
15-0	R/W	134	PWM_A_LOW: This sets the high time (in clock counts) for the PWM_A generator output

Amlogic Proprietary and Confidential
Copyright © Amlogic. All rights reserved.

Table 14-126 PWMAB_PWM_B

Bit(s)	R/W	Default	Description
31-15	R/W	80	PWM_B_HIGH: This sets the high time (in clock counts) for the PWM_B generator output
15-0	R/W	8	PWM_B_LOW: This sets the high time (in clock counts) for the PWM_B generator output

Table 14-127 PWMAB_MISC_REG_AB

Bit(s)	R/W	Default	Description
31	R/W	0	pwm_B_hiz when hiz mode, pwm_o will connect to pad_oe, then pad_o will equal this bit
30	R/W	0	pwm_A_hiz when hiz mode, pwm_o will connect to pad_oe, then pad_o will equal this bit
29	R/W	0	pwm_B_constant_en
28	R/W	0	pwm_A_constant_en
27	R/W	0	pwm_B_inv_en
26	R/W	0	pwm_A_inv_en
25	R/W	0	cntl_pwm_a2_en
24	R/W	0	cntl_pwm_b2_en
23	R/W	0	PWM_B_CLK_EN: Set this bit to 1 to enable PWM B clock
22-16	R/W	0	PWM_B_CLK_DIV: Selects the divider (N+1) for the PWM B clock. See the clock tress document
15	R/W	0	PWM_A_CLK_EN: Set this bit to 1 to enable PWM A clock
14-8	R/W	0	PWM_A_CLK_DIV: Selects the divider (N+1) for the PWM A clock. See the clock tress document
7-6	R/W	0	PWM_B_CLK_SEL: Select the clock for the PWM B. See the clock tress document
5-4	R/W	0	PWM_A_CLK_SEL: Select the clock for the PWM A. See the clock tress document
3	R/W	0	DS_B_EN: This bit is only valid if PWM_B_EN is 0: if this bit is set to 1, then the PWM_B output is configured to generate a delta sigma output based on the settings in the register below. If this bit is set to 0, then the PWM_B output is set low.
2	R/W	0	DS_A_EN: This bit is only valid if PWM_A_EN is 0: if this bit is set to 1, then the PWM_A output is configured to generate a delta sigma output based on the settings in the register below. If this bit is set to 0, then the PWM_A output is set low.
1	R/W	0	PWM_B_EN: If this bit is set to 1, then the PWM_B output is configured to generate a PWM output based on the register above. If this bit is 0, then the PWM_B output is controlled by DS_B_EN above.
0	R/W	0	PWM_A_EN: If this bit is set to 1, then the PWM_A output is configured to generate a PWM output based on the register above. If this bit is 0, then the PWM_A output is controlled by DS_A_EN above.

Amlogic Proprietary and Confidential
Copyright © Amlogic. All rights reserved.

Table 14-128 PWMAB_DELTA_SIGMA_AB

Bit(s)	R/W	Default	Description
31-15	R/W	0x8000	DS_B_VAL: This value represents the delta sigma setting for channel B (PWM_B)
15-0	R/W	0x8000	DS_A_VAL: This value represents the delta sigma setting for channel A (PWM_A)

Table 14-129 PWM_TIME_AB

Bit(s)	R/W	Default	Description
31-24	R/W	10	A_timer1
23:16	R/W	10	A_timer2
15:8	R/W	10	B_timer1
7:0	R/W	10	B_timer2

Table 14-130 PWMAB_A2

Bit(s)	R/W	Default	Description
31-15	R/W	134	PWM_A2_HIGH: This sets the high time (in clock counts) for the PWM_A2 generator output
15-0	R/W	134	PWM_A2_LOW: This sets the high time (in clock counts) for the PWM_A2 generator output

Table 14-131 PWMAB_B2

Bit(s)	R/W	Default	Description
31-15	R/W	80	PWM_B2_HIGH: This sets the high time (in clock counts) for the PWM_B2 generator output
15-0	R/W	8	PWM_B2_LOW: This sets the high time (in clock counts) for the PWM_B2 generator output

Table 14-132 PWMAB_LOCK_AB

Bit(s)	R/W	Default	Description
0	R/W	0	1: will lock all PWM register

14.8 SAR ADC

14.8.1 Overview

This SAR ADC is a general purpose ADC for measuring analog signals. The module can make RAW ADC measurements or average a number of measurements to introduce filtering. The SAR ADC is a single block so an analog mux is placed in front to allow multiple different measurements to be made sequentially. Timing of the samples, and delays between muxing are all programmable as is the averaging to be applied to the SAR ADC.

Amlogic Proprietary and Confidential
Copyright © Amlogic. All rights reserved.

14.8.2 Register Description

For the following registers:

Base_adr: 0xfe026000

Final_adr = base_adr + offset *4

The following lists describe the mapping between each SAR_ADC register and its address.

SAR_ADC_REG0 0xfe026000

SAR_ADC_CHAN_LIST 0xfe026004

SAR_ADC_AVG_CNTL 0xfe026008

SAR_ADC_REG3 0xfe02600c

SAR_ADC_DELAY 0xfe026010

SAR_ADC_LAST_RD 0xfe026014

SAR_ADC_FIFO_RD 0xfe026018

SAR_ADC_AUX_SW 0xfe02601c

SAR_ADC_CHAN_10_SW 0xfe026020

SAR_ADC_DETECT_IDLE_SW 0xfe026024

SAR_ADC_DELTA_10 0xfe026028

SAR_ADC_REG11 0xfe02602c

SAR_ADC_REG12 0xfe026030

SAR_ADC_REG13 0xfe026034

SAR_ADC_CHNL01 0xfe026038

SAR_ADC_CHNL23 0xfe02603c

SAR_ADC_CHNL45 0xfe026040

SAR_ADC_CHNL67 0xfe026044

Table 14-133 SAR_ADC_REG0: Control Register #0

Bit(s)	R/W	Default	Description
31	R	0	PANEL DETECT level.
30	R	0	DELTA_BUSY: If This bit is 1, then it indicates the delta processing engine is busy
29	R	0	AVG_BUSY: If This bit is 1, then it indicates the averaging engine is busy
28	R	0	SAMPLE_BUSY: If This bit is 1, then it indicates the sampling engine is busy
27	R	0	FIFO_FULL:
26	R	0	FIFO_EMPTY:
25-21	R/W	4	FIFO_COUNT: Current count of samples in the acquisition FIFO
20-19	R/W	0	ADC_BIAS_CTRL
18-16	R/W	0	CURR_CHAN_ID: These Bits represent the current channel (0..7) that is being sampled.
15	R	0	Unused

Amlogic Proprietary and Confidential
Copyright © Amlogic. All rights reserved.

Bit(s)	R/W	Default	Description
14	R/W	0	SAMPLING_STOP: This bit can be used to cleanly stop the sampling process in the event that continuous sampling is enabled. To stop sampling, simply set This bit and wait for all processing modules to no longer indicate that they are busy.
13-12	R/W	0	CHAN_DELTA_EN: There are two Bits corresponding to Channels 0 and 1. Channel 0 and channel 1 can be individually enabled to take advantage of the delta processing module.
11	R/W	0	Unused
10	R/W	0	DETECT_IRQ_POL: This bit sets the polarity of the detect signal. The detect signal is used during X/Y panel applications to detect if the panel is touched
9	R/W	0	DETECT_IRQ_EN: If This bit is set to 1, then an interrupt will be generated if the DETECT signal is low/high. The polarity is set in the bit above.
8-4	R/W	0	FIFO_CNT_IRQ: When the FIFO contains N samples, then generate an interrupt (if bit 3 is set below).
3	R/W	0	FIFO_IRQ_EN: Set This bit to 1 to enable an IRQ when the acquisition FIFO reaches a certain level.
2	W	0	SAMPLE_START: This bit should be written to 1 to start sampling.
1	R/W	0	CONTINUOUS_EN: If This bit is set to 1, then the channel list will be continually processed
0	R/W	0	SAMPLING_ENABLE: Setting This bit to '1' enables the touch panel controller sampling engine, averaging module, XY processing engine and the FIFO.

Table 14-134 SAR_ADC_CHAN_LIST:Channel List

Bit(s)	R/W	Default	Description
31-27	R/W	0	unused
26-24	R/W	2	Length of the list of channels to process. If this value is 2, then only channels in Bits [8:0] below are processed.
23-21	R/W	7	8th channel
20-18	R/W	6	7th channel
17-15	R/W	5	6th channel
14-12	R/W	4	5th channel
11-9	R/W	3	4th channel
8-6	R/W	2	3rd channel
5-3	R/W	1	2nd channel
2-0	R/W	0	First channel in the list of channels to process

Table 14-135 SAR_ADC_AVG_CNTL:Sampling/Averaging Modes

Bit(s)	R/W	Default	Description
31-30	R/W	0	Channel 7: Averaging mode: 0 = no averaging, 1 = simple averaging, 2 = median averaging.
29-28	R/W	0	Channel 6: Averaging mode: 0 = no averaging, 1 = simple averaging, 2 = median averaging.
27-26	R/W	0	Channel 5: Averaging mode: 0 = no averaging, 1 = simple averaging, 2 = median averaging.

Amlogic Proprietary and Confidential
Copyright © Amlogic. All rights reserved.

Bit(s)	R/W	Default	Description
25-24	R/W	0	Channel 4: Averaging mode: 0 = no averaging, 1 = simple averaging, 2 = median averaging.
23-22	R/W	0	Channel 3: Averaging mode: 0 = no averaging, 1 = simple averaging, 2 = median averaging.
21-20	R/W	0	Channel 2: Averaging mode: 0 = no averaging, 1 = simple averaging, 2 = median averaging.
19-18	R/W	0	Channel 1: Averaging mode: 0 = no averaging, 1 = simple averaging, 2 = median averaging.
17-16	R/W	0	Channel 0: Averaging mode: 0 = no averaging. 1 = simple averaging of the number of samples acquired (1,2,4 or 8). 2 = median averaging. NOTE: If these Bits are set to 2, then you must set the number of samples to acquire below to 8.
15-13	R/W	0	Channel 7: Number of samples to acquire 2N:
13-12	R/W	0	Channel 6: Number of samples to acquire 2N:
11-10	R/W	0	Channel 5: Number of samples to acquire 2N:
9-8	R/W	0	Channel 4: Number of samples to acquire 2N:
7-6	R/W	0	Channel 3: Number of samples to acquire 2N:
5-4	R/W	0	Channel 2: Number of samples to acquire 2N:
3-2	R/W	0	Channel 1: Number of samples to acquire 2N:
1-0	R/W	0	Channel 0: Number of samples to acquire 2N: 0 = 1, 1 = 2, 2 = 4, 4 = 8.

Each channel listed in the CHANNEL_LIST is given independent control of the number of samples to acquire and averaging mode.

Table 14-136 SAR_ADC_REG3: Control Register #3

Bit(s)	R/W	Default	Description
31	R/W	0	CNTL_USE_SC_DLY: hold time delay was added to the start conversion clock. Unfortunately, it appears that the analog ADC design requires that we use the inverted clock so This bit is meaningless.
30	R/W	0	SAR ADC_CLK_EN: 1 = enable the SAR ADC clock
29	R/W	0	reserved
28	R/W	0	reserved
27	R/W	0	SARADC_CTRL[4]: is used to control the internal ring counter. 1 = enable the continuous ring counter. 0 = disable
26	R/W	0	SARADC_CTRL[3]: used to select the internal sampling clock phase
25~23	R/W	0	SARADC_CTRL[2:0]: 000 ssa 001 vdda/4 010 vdda/2 011 vdda*3/4 100 vdda 101, 110, 111 unused
22	R/W	0	DETECT_EN: This bit controls the analog switch that connects a 50k resistor to the X+ signal. Setting This bit to 1 closes the analog switch
21	R/W	0	ADC_EN: Set This bit to 1 to enable the ADC

Amlogic Proprietary and Confidential
Copyright © Amlogic. All rights reserved.

Bit(s)	R/W	Default	Description
20-18	R/W	2	PANEL_DETECT_COUNT: Increasing this value increases the filtering on the panel detect signal using the timebase settings in Bits [17:16] below.
17-16	R/W	0	PANEL_DETECT_FILTER_TB: 0 = count 1uS ticks, 1 = count 10uS ticks, 2 = count 100uS ticks. 3 = count 1mS ticks
15-10	R/W	20	ADC_CLK_DIV: The ADC clock is derived by dividing the 27Mhz crystal by N+1. This value divides the 27Mhz clock to generate an ADC clock. A value of 20 for example divides the 27Mhz clock by 21 to generate an equivalent 1.28Mhz clock.
9-8	R/W	1	BLOCK_DLY_SEL: 0 = count 1uS ticks, 1 = count 10uS ticks, 2 = count 100uS ticks. 3 = count 1mS ticks
7-0	R/W	10	BLOCK_DLY: After all channels in the CHANNEL_LIST have been processed, the sampling engine will delay for an amount of time before re-processing the CHANNEL_LIST again. Combined with Bits [9:8] above, this value is used to generate a delay between processing blocks of channels.

Figure 14-12 SAR_ADC_REG3

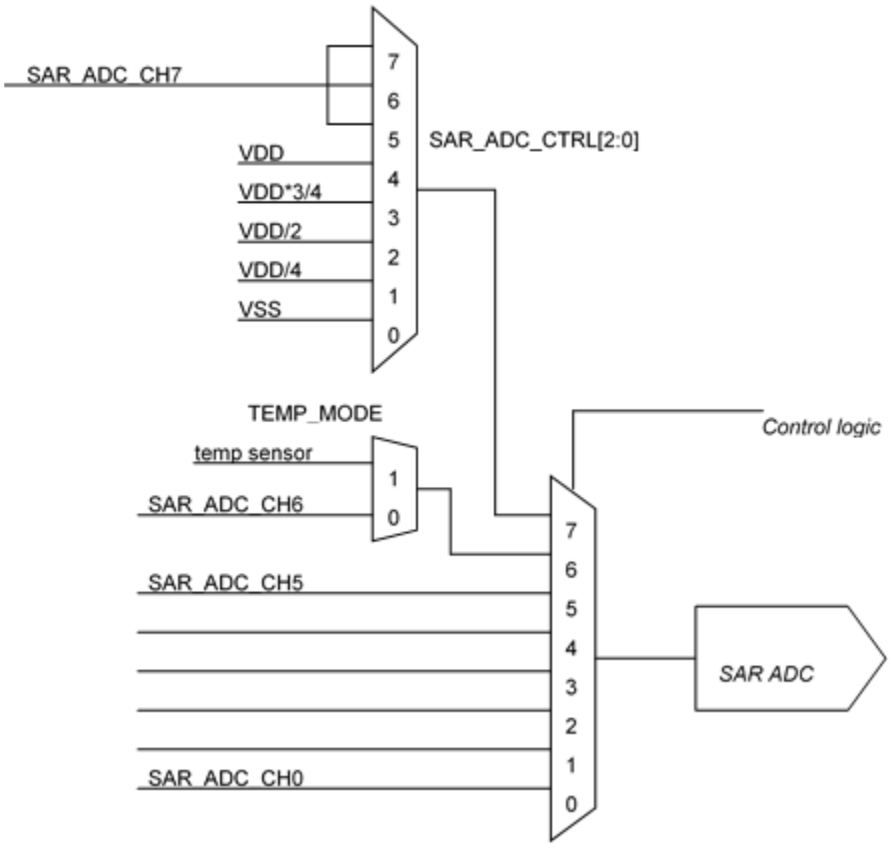

As the CHANNEL_LIST is process, the input switches are set according to the requirements of the channel. After setting the switches there is a programmable delay before sampling begins. Additionally, each channel specifies the number of samples for that particular channel. The sampling rate is programmed below.

Amlogic Proprietary and Confidential
Copyright © Amlogic. All rights reserved.

Table 14-137 SAR_ADC_DELAY:INPUT / SAMPLING DELAY

Bit(s)	R/W	Default	Description
31-29	R	0	unused
28	R/W	0	CNTL_EOC_BY_CNT: ADC dout valid controlled by counter
27	R/W	0	CNTL_USE_LATCHED_DATA: ADC dout be latched first, then be sampled
26	R	0	unused
25-24	R/W	0	INPUT_DLY_SEL: 0 = 111nS ticks, 1 = count 1uS ticks, 2 = count 10uS ticks, 3 = count 100uS ticks
23-16	R/W	3	INPUT_DLY_CNY: For channels that acquire 2,4 or 8 samples, the delay between two samples is controlled by this count (N+1) combined with the delay selection in the two bits above.
15-10	R/W	14	CNTL_EOC_DLY_CNT: the delay between SC and ADC output data ready for latch/sample
9-8	R/W	0	SAMPLE_DLY_SEL: 0 = count 1uS ticks, 1 = count 10uS ticks, 2 = count 100uS ticks. 3 = count 1mS ticks
7-0	R/W	9	SAMPLE_DLY_CNY: For channels that acquire 2,4 or 8 samples, the delay between two samples is controlled by this count (N+1) combined with the delay selection in the two bits above.

For channel 0 and channel 1, (the special X/Y channels) the last sample pushed into the FIFO for each channel is saved in a register. This allows the software to see the last sample for channel 0 and channel 1 even when the FIFO overflows. For example, if we are sampling quickly and there is a gesture on the screen, we can use the contents of the FIFO to see the direction of the gesture and use the last sample values to see where the pen finally came to rest.

Table 14-138 SAR_ADC_LAST_RD: Last Sample

Bit(s)	R/W	Default	Description
31-28	R	0	unused
27-16	R	0	LAST_CHANNEL1
15-12	R	0	unused
11-0	R	0	LAST_CHANNEL0

Table 14-139 SAR_ADC_FIFO_RD: Control Register #6 (FIFO RD)

Bit(s)	R/W	Default	Description
31-28	R	0	Unused
27-16	R	0	RAW data
15	R	0	Unused
14-12	R	0	Channel ID. This value identifies the channel associated with the data in Bits [11:0] below
11-0	R	0	Sample value: 12-bit raw or averaged ADC sample written to the FIFO.

Channels 2 ~ 7 can program the ADC input mux to any selection between 0 and 7. This register allows the software to associate a mux selection with a particular channel. In addition to the ADC mux, there are a number of switches that can be set in any particular state. Channels 2 ~ 7 share a common

Amlogic Proprietary and Confidential
Copyright © Amlogic. All rights reserved.

switch setting. Channels 0 and 1 on the other hand have programmable switch settings (see other registers below).

Table 14-140 SAR_ADC_AUX_SW:Channel 2~7 ADC MUX, Switch Controls

Bit(s)	R/W	Default	Description
31	R	0	EOC
29	R/W	0	CNTL_MANUAL_SC
28	R/W	0	CNTL_MANUAL_CLK
27	R/W	0	CNTL_MANUAL_MODE
26	R	0	unused
25-23	R/W	7	Channel 7 ADC_MUX setting when channel 7 is being measured.
22-20	R/W	7	Channel 6 ADC_MUX setting when channel 6 is being measured.
19-17	R/W	7	Channel 5 ADC_MUX setting when channel 5 is being measured.
16-14	R/W	6	Channel 4 ADC_MUX setting when channel 4 is being measured.
13-11	R/W	0	Channel 3 ADC_MUX setting when channel 3 is being measured.
10-8	R/W	1	Channel 2 ADC_MUX setting when channel 2 is being measured.
7	R	0	unused
6	R/W	0	VREF_P_MUX setting when channel 2,3..7 is being measured
5	R/W	0	VREF_N_MUX setting when channel 2,3..7 is being measured
4	R/W	0	MODE_SEL setting when channel 2,3..7 is being measured
3	R/W	1	YP_DRIVE_SW setting when channel 2,3..7 is being measured
2	R/W	1	XP_DRIVE_SW setting when channel 2,3..7 is being measured
1	R/W	0	YM_DRIVE_SW setting when channel 2,3..7 is being measured
0	R/W	0	YM_DRIVE_SW setting when channel 2,3..7 is being measured

Channels 0 and 1 have independent programmable switch settings when either/both of these channels are being measured.

Table 14-141 SAR_ADC_CHAN_10_SW:Channel 0, 1 ADC MUX, Switch Controls

Bit(s)	R/W	Default	Description
31-26	R	0	unused
25-23	R/W	2	Channel 1 ADC MUX setting
22	R/W	0	Channel 1 VREF_P_MUX
21	R/W	0	Channel 1 VREF_N_MUX
20	R/W	0	Channel 1 MODE_SEL
19	R/W	1	Channel 1 YP_DRIVE_SW setting: 0: TADC_CH6N = 3.3v 1: TADC_CH6N = floating
18	R/W	1	Channel 1 XP_DRIVE_SW setting: 0: TADC_CH6N = 3.3v 1: TADC_CH6N = floating

Amlogic Proprietary and Confidential
Copyright © Amlogic. All rights reserved.

Bit(s)	R/W	Default	Description
17	R/W	0	Channel 1 YM_DRIVE_SW setting: 0: TADC_CH4N = floating 1: TADC_CH4N = GND
16	R/W	0	Channel 1 YM_DRIVE_SW setting: 0: TADC_CH4N = floating 1: TADC_CH4N = GND
15-10	R		unused
9-7	R/W	3	Channel 0 ADC MUX setting
6	R/W	0	Channel 0 VREF_P_MUX
5	R/W	0	Channel 0 VREF_N_MUX
4	R/W	0	Channel 0 MODE_SEL
3	R/W	1	Channel 0 YP_DRIVE_SW setting: 0: TADC_CH6N = 3.3v 1: TADC_CH6N = floating
2	R/W	1	Channel 0 XP_DRIVE_SW setting: 0: TADC_CH6N = 3.3v 1: TADC_CH6N = floating
1	R/W	0	Channel 0 YM_DRIVE_SW setting: 0: TADC_CH4N = floating 1: TADC_CH4N = GND
0	R/W	0	Channel 0 YM_DRIVE_SW setting: 0: TADC_CH4N = floating 1: TADC_CH4N = GND

IDLE MODE: When nothing is being measured, the switches should be put into a safe state. This safe state is accomplished using Bits [9:0] below.

DETECT MODE: When bit [26] is set, the input muxes / switches are configured according to the Bits below. Typically the software configures the switches below to correspond to the detect touch mode. That is, Y- internal MOSFET is closed so that the Y plane of the touch screen is connected to Ground. Additionally, the DETECT_EN bit(different register) set to 1 so that the 50k resistor to VDD is connected to X+. In this configuration, the detect comparator connected to the 50k resistor will be weakly pulled up to VDD through the 50k resistor. If the user touches the screen, the X and Y planes of the touch screen will contact causing the X+ signal to be pulled to ground.

Table 14-142 SAR_ADC_DETECT_IDLE_SW:DETECT / IDLE Mode switches

Bit(s)	R/W	Default	Description
31-27	R	0	unused
26	R/W	0	DETECT_SW_EN: If This bit is set, then Bits [25:16] below are applied to the analog muxes/switches of the touch panel controller.
25-23	R/W	5	DETECT MODE ADC MUX setting
22	R/W	0	DETECT MODE VREF_P_MUX setting
21	R/W	0	DETECT MODE VREF_N_MUX setting
20	R/W	0	DETECT MODE MODE_SEL setting
19	R/W	1	DETECT MODE YP_DRIVE_SW setting: 0: TADC_CH6N = 3.3v 1: TADC_CH6N = floating

Amlogic Proprietary and Confidential
Copyright © Amlogic. All rights reserved.

Bit(s)	R/W	Default	Description
18	R/W	1	DETECT MODE XP_DRIVE_SW setting: 0: TADC_CH6N = 3.3v 1: TADC_CH6N = floating
17	R/W	0	DETECT MODE YM_DRIVE_SW setting: 0: TADC_CH4N = floating 1: TADC_CH4N = GND
16	R/W	0	DETECT MODE YM_DRIVE_SW setting: 0: TADC_CH4N = floating 1: TADC_CH4N = GND
15-10	R		Unused
9-7	R/W	5	IDLE MODE ADC MUX setting
6	R/W	0	IDLE MODE VREF_P_MUX setting
5	R/W	0	IDLE MODE VREF_N_MUX setting
4	R/W	0	IDLE MODE MODE_SEL setting
3	R/W	1	IDLE MODE YP_DRIVE_SW setting: 0: TADC_CH6N = 3.3v 1: TADC_CH6N = floating
2	R/W	1	IDLE MODE XP_DRIVE_SW setting: 0: TADC_CH6N = 3.3v 1: TADC_CH6N = floating
1	R/W	0	IDLE MODE YN_DRIVE_SW setting: 0: TADC_CH4N = floating 1: TADC_CH4N = GND
0	R/W	0	IDLE MODE XN_DRIVE_SW setting: 0: TADC_CH4N = floating 1: TADC_CH4N = GND

Table 14-143 SAR_ADC_DELTA_10:Delta Mode Deltas

Bit(s)	R/W	Default	Description
31-28	R	0	unused
27-16	R/W	0	Channel 1 delta value when delta processing for channel 1 is enabled.
15-12	R/W		unused
11-0	R/W	0	Channel 0 delta value when delta processing for channel 0 is enabled.

Table 14-144 SAR_ADC_REG11

Bit(s)	R/W	Default	Description
31	R/W	0	fifo_disable: 1=dout don`t put into fifo
30	R/W	0	period_sample_en: 1=period_sample enable, dout register into chnl reg AO_SAR_ADC_CHNL01/23/45/67
29-13	R/W	0	ts_cntl_int
12-0	R/W	0	sar_bg_cntl

Amlogic Proprietary and Confidential
Copyright © Amlogic. All rights reserved.

Table 14-145 SAR_ADC_REG12

Bit(s)	R/W	Default	Description
31-0	R/W	0	reserved

Table 14-146 SAR_ADC_REG13

Bit(s)	R/W	Default	Description
31-8	R	0	unused
15-8	R/W	0	SARADC_RSV2
7-0	R/W	0	reserved

Table 14-147 SAR_ADC_CHNL01

Bit(s)	R/W	Default	Description
31	R/W	0	dout_chnl1_valid
30-28	R/W	0	dout_chnl1_id
27-16	R/W	0	dout_chnl1
15	R/W	0	dout_chnl0_valid
14-12	R/W	0	dout_chnl0_id
11-0	R/W	0	dout_chnl0

Table 14-148 SAR_ADC_CHNL23

Bit(s)	R/W	Default	Description
31	R/W	0	dout_chnl3_valid
30-28	R/W	0	dout_chnl3_id
27-16	R/W	0	dout_chnl3
15	R/W	0	dout_chnl2_valid
14-12	R/W	0	dout_chnl2_id
11-0	R/W	0	dout_chnl2

Table 14-149 SAR_ADC_CHNL45

Bit(s)	R/W	Default	Description
31	R/W	0	dout_chnl5_valid
30-28	R/W	0	dout_chnl5_id
27-16	R/W	0	dout_chnl5
15	R/W	0	dout_chnl4_valid
14-12	R/W	0	dout_chnl4_id
11-0	R/W	0	dout_chnl4

Amlogic Proprietary and Confidential
Copyright © Amlogic. All rights reserved.

Table 14-150 SAR_ADC_CHNL67

Bit(s)	R/W	Default	Description
31	R/W	0	dout_chnl7_valid
30-28	R/W	0	dout_chnl7_id
27-16	R/W	0	dout_chnl7
15	R/W	0	dout_chnl6_valid
14-12	R/W	0	dout_chnl6_id
11-0	R/W	0	dout_chnl6

Amlogic Proprietary and Confidential
Copyright © Amlogic. All rights reserved.

15 System Interface

15.1 JTAG

JTAG is an interface for internal test. The structure of SoC JTAG module is shown in the following diagram.

Figure 15-1 JTAG Structure

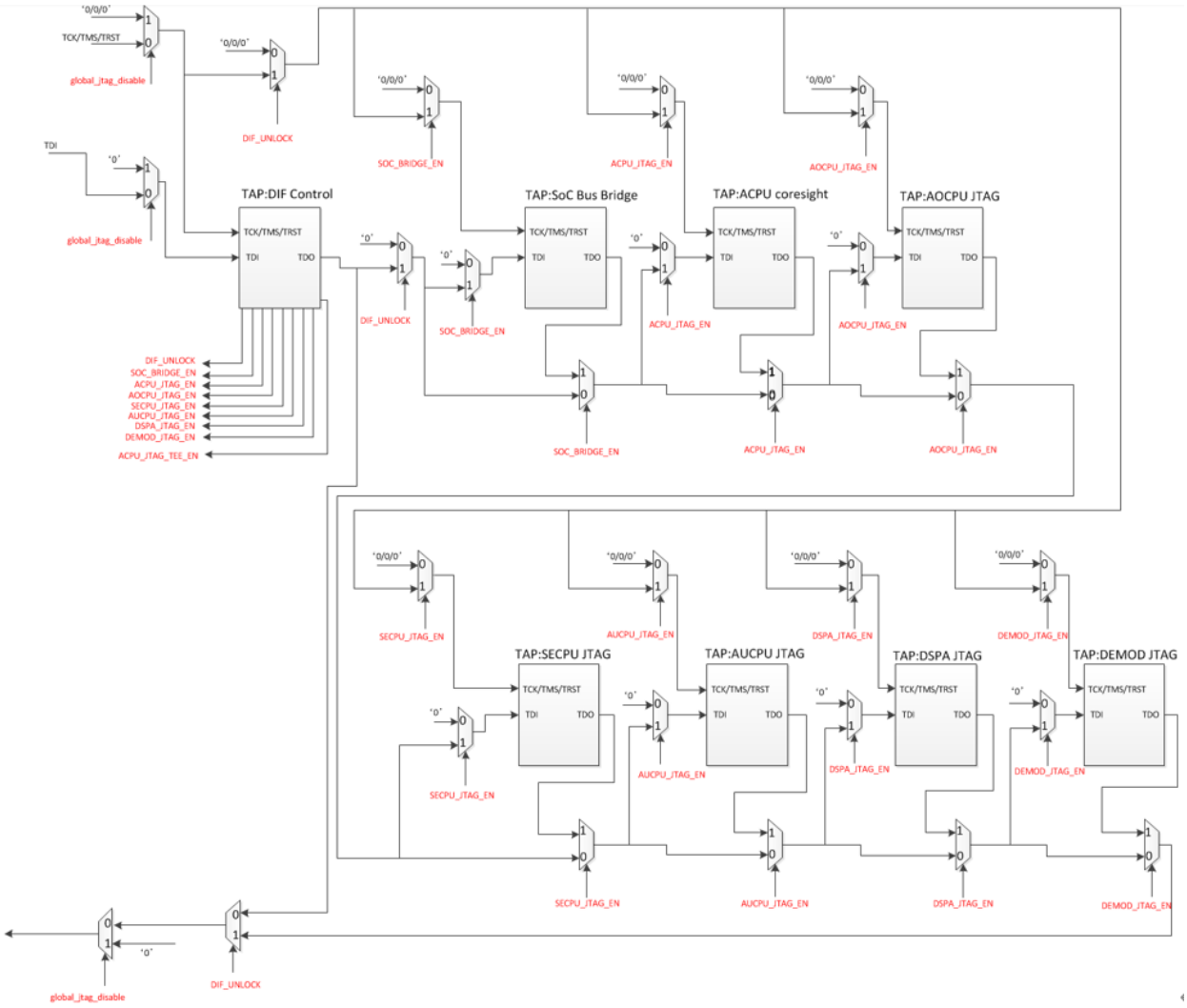

15.2 Temp Sensor

15.2.1 Overview

The SoC integrates 2 Temp Sensor, one is close to DDR, one is close to PLL (between CPU and GPU).

Each Temp Sensor are the same design.

- Capture temperature by programable tick;
- Store 16 temperature value;

Amlogic Proprietary and Confidential
Copyright © Amlogic. All rights reserved.

- Can reset all chip if detect high temperature;
- Can generate IRQ by 8 threshold;

Figure 15-2 Temp Sensor

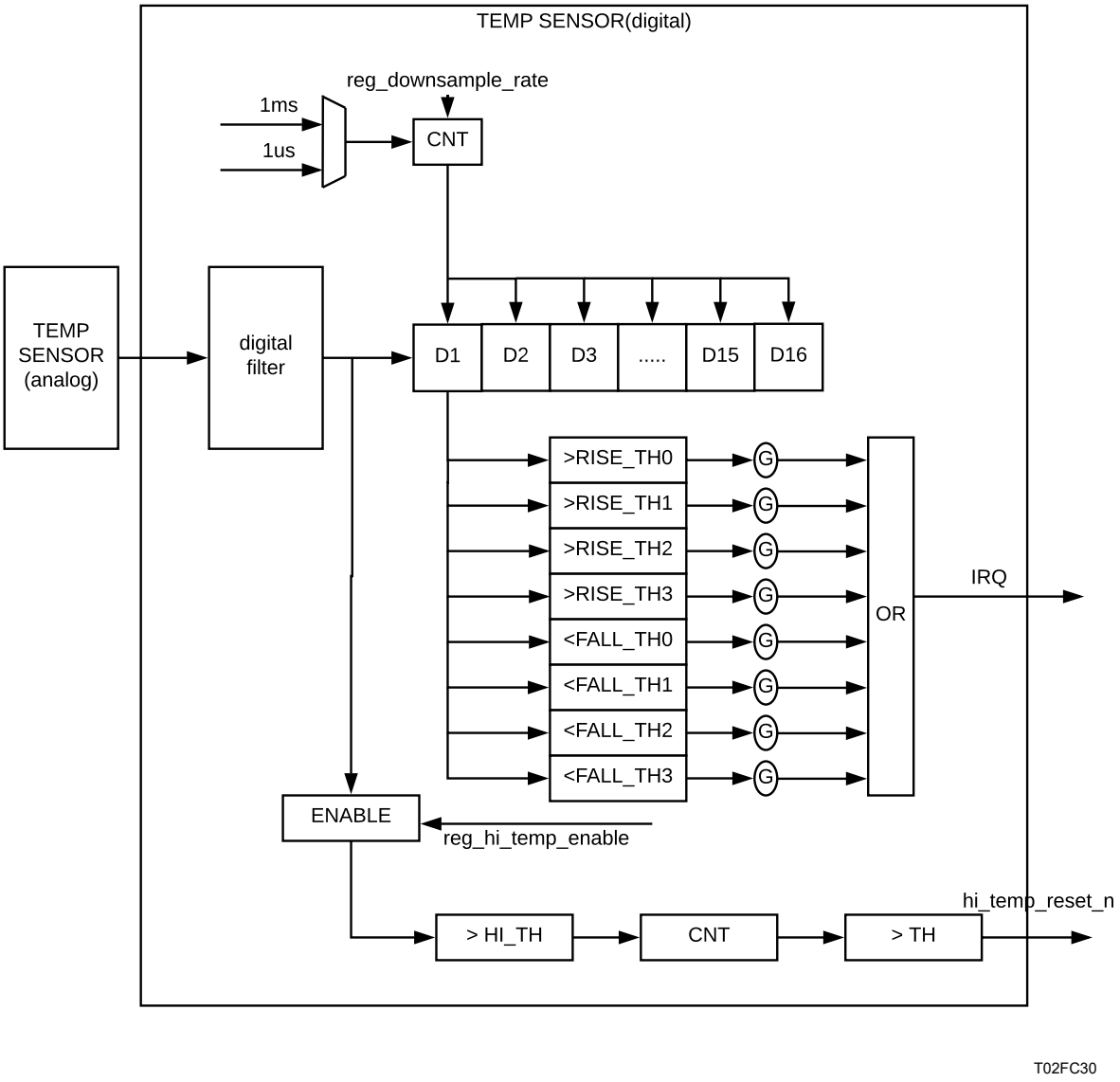

15.2.2 Register Description

Base Address: FE020000

Each register final address = module base address+ address * 4

- TS_A73_CFG_REG1 0xfe020004
- TS_A73_CFG_REG2 0xfe020008
- TS_A73_CFG_REG3 0xfe02000c
- TS_A73_CFG_REG4 0xfe020010
- TS_A73_CFG_REG5 0xfe020014
- TS_A73_CFG_REG6 0xfe020018
- TS_A73_CFG_REG7 0xfe02001c

Amlogic Proprietary and Confidential
Copyright © Amlogic. All rights reserved.

- TS_A73_STAT0 0xfe020040
- TS_A73_STAT1 0xfe020044
- TS_A73_STAT2 0xfe020048
- TS_A73_STAT3 0xfe02004c
- TS_A73_STAT4 0xfe020050
- TS_A73_STAT5 0xfe020054
- TS_A73_STAT6 0xfe020058
- TS_A73_STAT7 0xfe02005c
- TS_A73_STAT8 0xfe020060
- TS_A73_STAT9 0xfe020064
- TS_A53_CFG_REG1 0xfe022004
- TS_A53_CFG_REG2 0xfe022008
- TS_A53_CFG_REG3 0xfe02200c
- TS_A53_CFG_REG4 0xfe022010
- TS_A53_CFG_REG5 0xfe022014
- TS_A53_CFG_REG6 0xfe022018
- TS_A53_CFG_REG7 0xfe02201c
- TS_A53_STAT0 0xfe022040
- TS_A53_STAT1 0xfe022044
- TS_A53_STAT2 0xfe022048
- TS_A53_STAT3 0xfe02204c
- TS_A53_STAT4 0xfe022050
- TS_A53_STAT5 0xfe022054
- TS_A53_STAT6 0xfe022058
- TS_A53_STAT7 0xfe02205c
- TS_A53_STAT8 0xfe022060
- TS_A53_STAT9 0xfe022064
- TS_GPU_CFG_REG1 0xfe094004
- TS_GPU_CFG_REG2 0xfe094008
- TS_GPU_CFG_REG3 0xfe09400c
- TS_GPU_CFG_REG4 0xfe094010
- TS_GPU_CFG_REG5 0xfe094014
- TS_GPU_CFG_REG6 0xfe094018
- TS_GPU_CFG_REG7 0xfe09401c
- TS_GPU_STAT0 0xfe094040
- TS_GPU_STAT1 0xfe094044
- TS_GPU_STAT2 0xfe094048
- TS_GPU_STAT3 0xfe09404c
- TS_GPU_STAT4 0xfe094050
- TS_GPU_STAT5 0xfe094054
- TS_GPU_STAT6 0xfe094058
- TS_GPU_STAT7 0xfe09405c
- TS_GPU_STAT8 0xfe094060
- TS_GPU_STAT9 0xfe094064

Amlogic Proprietary and Confidential
Copyright © Amlogic. All rights reserved.

- TS_NNA_CFG_REG1 0xfe096004
- TS_NNA_CFG_REG2 0xfe096008
- TS_NNA_CFG_REG3 0xfe09600c
- TS_NNA_CFG_REG4 0xfe096010
- TS_NNA_CFG_REG5 0xfe096014
- TS_NNA_CFG_REG6 0xfe096018
- TS_NNA_CFG_REG7 0xfe09601c
- TS_NNA_STAT0 0xfe096040
- TS_NNA_STAT1 0xfe096044
- TS_NNA_STAT2 0xfe096048
- TS_NNA_STAT3 0xfe09604c
- TS_NNA_STAT4 0xfe096050
- TS_NNA_STAT5 0xfe096054
- TS_NNA_STAT6 0xfe096058
- TS_NNA_STAT7 0xfe09605c
- TS_NNA_STAT8 0xfe096060
- TS_NNA_STAT9 0xfe096064
- TS_VPU_CFG_REG1 0xfe098004
- TS_VPU_CFG_REG2 0xfe098008
- TS_VPU_CFG_REG3 0xfe09800c
- TS_VPU_CFG_REG4 0xfe098010
- TS_VPU_CFG_REG5 0xfe098014
- TS_VPU_CFG_REG6 0xfe098018
- TS_VPU_CFG_REG7 0xfe09801c
- TS_VPU_STAT0 0xfe098040
- TS_VPU_STAT1 0xfe098044
- TS_VPU_STAT2 0xfe098048
- TS_VPU_STAT3 0xfe09804c
- TS_VPU_STAT4 0xfe098050
- TS_VPU_STAT5 0xfe098054
- TS_VPU_STAT6 0xfe098058
- TS_VPU_STAT7 0xfe09805c
- TS_VPU_STAT8 0xfe098060
- TS_VPU_STAT9 0xfe098064
- TS_HEVC_CFG_REG1 0xfe09a004
- TS_HEVC_CFG_REG2 0xfe09a008
- TS_HEVC_CFG_REG3 0xfe09a00c
- TS_HEVC_CFG_REG4 0xfe09a010
- TS_HEVC_CFG_REG5 0xfe09a014
- TS_HEVC_CFG_REG6 0xfe09a018
- TS_HEVC_CFG_REG7 0xfe09a01c
- TS_HEVC_STAT0 0xfe09a040
- TS_HEVC_STAT1 0xfe09a044
- TS_HEVC_STAT2 0xfe09a048

Amlogic Proprietary and Confidential
Copyright © Amlogic. All rights reserved.

- TS_HEVC_STAT3 0xfe09a04c
- TS_HEVC_STAT4 0xfe09a050
- TS_HEVC_STAT5 0xfe09a054
- TS_HEVC_STAT6 0xfe09a058
- TS_HEVC_STAT7 0xfe09a05c
- TS_HEVC_STAT8 0xfe09a060
- TS_HEVC_STAT9 0xfe09a064

Table 15-1 TS_CFG_REG1 0x001

Bits	R/W	Default	Description
31	R/W	0	fall_th3_irq_en
30	R/W	0	fall_th2_irq_en
29	R/W	0	fall_th1_irq_en
28	R/W	0	fall_th0_irq_en
27	R/W	0	rise_th3_irq_en
26	R/W	0	rise_th2_irq_en
25	R/W	0	rise_th1_irq_en
24	R/W	0	rise_th0_irq_en
23	R/W	0	fall_th3_irq_stat_clr
22	R/W	0	fall_th2_irq_stat_clr
21	R/W	0	fall_th1_irq_stat_clr
20	R/W	0	fall_th0_irq_stat_clr
19	R/W	0	rise_th3_irq_stat_clr
18	R/W	0	rise_th2_irq_stat_clr
17	R/W	0	rise_th1_irq_stat_clr
16	R/W	0	rise_th0_irq_stat_clr
15	R/W	0	1: enable IRQ related function.
14	R/W	0	fast_mode: 0 : downsample unit = 1ms; 1: downsample unit = 1us;
13	R/W	0	clr_hi_temp_stat
12	R/W	0	ts_ana_rset_vbg reset vbg(set 0, if have error place set it plus 01000..)
11	R/W	0	ts_ana_rst_sd reset adc(set 0, if have error place set it plus 01000..)
10	R/W	0	ts_ana_en_vcm enable vcm (disable:0; enable:1)
9	R/W	0	ts_ana_en_vbg enable vbg (disable:0; enable: 1)
8:7	R/W	0	filter hcic mode 0: downsample rate = 128; 1: downsample rate = 256; 2/3: downsample rate = 512;

Amlogic Proprietary and Confidential
Copyright © Amlogic. All rights reserved.

Bits	R/W	Default	Description
6	R/W	0	filter ts_out_ctrl; 1: add more delay for filter lock;
5	R/W	0	filter en(disable:0; enable:1)
4	R/W	0	ts_ana_en_iptat, useless.
3	R/W	0	Temp Sensor DEM enable. (disable:0; enable:1)
2:0	R/W	0	Bipolar bias current input control. recommend value : 3. ts_ana_ch_sel; 0: 8'b00000001; 1: 8'b00000011; 2: 8'b00000111; 3: 8'b00001111; 4: 8'b00011111; 5: 8'b00111111; 6: 8'b01111111; 7: 8'b11111111;

Table 15-2 TS_CFG_REG2 0x002

Bits	R/W	Default	Description
31	R/W	0	hi_temp_enable
30	R/W	0	reset_en, if = 0, will not reset all chip;
27:16	R/W	0	high temperature times, if continuous detect high temperature, then will reset all chip.
15:0	R/W	0	high temperature threshold, if temperature value > this th , mean detected once high temperature

Table 15-3 TS_CFG_REG3 0x03

Bits	R/W	Default	Description
31:16	R/W	0	
15:0	R/W	0	down_sample rate

Table 15-4 TS_CFG_REG4 0x04

Bits	R/W	Default	Description
23:12	R/W	0	rise_th0
11:0	R/W	0	rise_th1

Table 15-5 TS_CFG_REG5 0x05

Bits	R/W	Default	Description
23:12	R/W	0	rise_th2
11:0	R/W	0	rise_th3

Amlogic Proprietary and Confidential
Copyright © Amlogic. All rights reserved.

Table 15-6 TS_CFG_REG6 0x06

Bits	R/W	Default	Description
23:12	R/W	0	fall_th0
11:0	R/W	0	fall_th1

Table 15-7 TS_CFG_REG7 0x07

Bits	R/W	Default	Description
23:12	R/W	0	fall_th2
11:0	R/W	0	fall_th3

Table 15-8 TS_STAT0 0x10

Bits	R/W	Default	Description
31:18	R	0	detect_hi_temp_cnt
17	R	0	detected_hi_temp_stat
16	R	0	filter lock
15:0	R	0	filter out

Table 15-9 TS_STAT1 0x11

Bits	R/W	Default	Description
31:9	R	0	
8	R	0	hi_temp_stat
7	R	0	fall_th3_irq
6	R	0	fall_th2_irq
5	R	0	fall_th1_irq
4	R	0	fall_th0_irq
3	R	0	rise_th3_irq
2	R	0	rise_th2_irq
1	R	0	rise_th1_irq
0	R	0	rise_th0_irq

Table 15-10 TS_STAT2 0x12

Bits	R/W	Default	Description
31:16	R	0	temperature value D2
15:0	R	0	temperature value D1

Amlogic Proprietary and Confidential
Copyright © Amlogic. All rights reserved.

Table 15-11 TS_STAT3 0x13

Bits	R/W	Default	Description
31:16	R	0	temperature value D4
15:0	R	0	temperature value D3

Table 15-12 TS_STAT4 0x14

Bits	R/W	Default	Description
31:16	R	0	temperature value D6
15:0	R	0	temperature value D5

Table 15-13 TS_STAT5 0x15

Bits	R/W	Default	Description
31:16	R	0	temperature value D8
15:0	R	0	temperature value D7

Table 15-14 TS_STAT6 0x16

Bits	R/W	Default	Description
31:16	R	0	temperature value D10
15:0	R	0	temperature value D9

Table 15-15 TS_STAT7 0x17

Bits	R/W	Default	Description
31:16	R	0	temperature value D12
15:0	R	0	temperature value D11

Table 15-16 TS_STAT8 0x18

Bits	R/W	Default	Description
31:16	R	0	temperature value D14
15:0	R	0	temperature value D13

Table 15-17 TS_STAT9 0x19

Bits	R/W	Default	Description
31:16	R	0	temperature value D16
15:0	R	0	temperature value D15

Amlogic Proprietary and Confidential
Copyright © Amlogic. All rights reserved.

16 Appendix

16.1 Net Length

The following table describes the length of all nets on the SoC.

Table 16-1 Net Length

Net Name	Net Length(um)
CSI_A_CLKN	5030.487
CSI_A_CLKP	4817.861
CSI_A_D0N	4711.585
CSI_A_D0P	4641.622
CSI_A_D1N	5211.345
CSI_A_D1P	5242.432
CSI_A_D2N	4639.844
CSI_A_D2P	4427.007
CSI_A_D3N	4653.205
CSI_A_D3P	4585.335
CSI_B_CLKN	4655.489
CSI_B_CLKP	4305.908
CSI_C_CLKN	4746.718
CSI_C_CLKP	4489.501
CSI_C_D0N	3502.054
CSI_C_D0P	3578.28
CSI_C_D1N	4059.798
CSI_C_D1P	3795.459
CSI_C_D2N	4346.695
CSI_C_D2P	3920.985
CSI_C_D3N	5064.898
CSI_C_D3P	4795.254
CSI_D_CLKN	5543.884
CSI_D_CLKP	5300.085
DDR0_AC_0	6399.3
DDR0_AC_1	6696.615
DDR0_AC_2	5038.469
DDR0_AC_3	6039.656
DDR0_AC_4	3918.165

Amlogic Proprietary and Confidential
Copyright © Amlogic. All rights reserved.

Net Name	Net Length(um)
DDR0_AC_5	3929.111
DDR0_AC_6	3854.377
DDR0_AC_7	5378.488
DDR0_AC_8	7017.325
DDR0_AC_9	7211.078
DDR0_AC_10	5655.812
DDR0_AC_11	5389.325
DDR0_AC_12	6631.093
DDR0_AC_13	6215.168
DDR0_AC_14	6097.363
DDR0_AC_15	5612.287
DDR0_AC_20	3523.224
DDR0_AC_21	3500.304
DDR0_AC_22	3367.634
DDR0_AC_23	2940.266
DDR0_AC_24	5768.027
DDR0_AC_25	5929.304
DDR0_AC_26	4427.73
DDR0_AC_28	3227.357
DDR0_AC_29	4306.811
DDR0_AC_30	4369.684
DDR0_AC_31	5228.182
DDR0_AC_32	4015.173
DDR0_AC_33	5314.911
DDR0_AC_34	6854.232
DDR0_AC_35	5712.777
DDR0_AC_36	3944.826
DDR0_AC_37	1641.622
DDR0_AC_38	4189.761
DDR0_DQ0	6280.845
DDR0_DQ1	5166.292
DDR0_DQ2	5018.542
DDR0_DQ3	4418.469
DDR0_DQ4	3402.634
DDR0_DQ5	6233.136

Amlogic Proprietary and Confidential
Copyright © Amlogic. All rights reserved.

Net Name	Net Length(um)
DDR0_DQ6	3823.584
DDR0_DQ7	5358.769
DDR0_DQ8	5946.746
DDR0_DQ9	3073.453
DDR0_DQ10	2543.422
DDR0_DQ11	4164.59
DDR0_DQ12	2715.204
DDR0_DQ13	3036.421
DDR0_DQ14	3232.893
DDR0_DQ15	4137.148
DDR0_DQ16	3360.979
DDR0_DQ17	3437.216
DDR0_DQ18	3321.299
DDR0_DQ19	3906.145
DDR0_DQ20	4272.024
DDR0_DQ21	4564.25
DDR0_DQ22	3755.071
DDR0_DQ23	3649.98
DDR0_DQ24	3815.958
DDR0_DQ25	3158.116
DDR0_DQ26	2963.749
DDR0_DQ27	4441.774
DDR0_DQ28	2131.234
DDR0_DQ29	2471.88
DDR0_DQ30	2877.104
DDR0_DQ31	3874.563
DDR0_DQM0	5024.362
DDR0_DQM1	3653.29
DDR0_DQM2	5294.813
DDR0_DQM3	3786.985
DDR0_DQSN0	4978.861
DDR0_DQSN1	4091.433
DDR0_DQSN2	3008.052
DDR0_DQSN3	3145.699
DDR0_DQSP0	5049.99

Amlogic Proprietary and Confidential
Copyright © Amlogic. All rights reserved.

Net Name	Net Length(um)
DDR0_DQSP1	4162.587
DDR0_DQSP2	3220.211
DDR0_DQSP3	3224.322
DDR1_AC_0	4524.667
DDR1_AC_1	4270.125
DDR1_AC_2	5360.315
DDR1_AC_3	4796.72
DDR1_AC_4	3498.185
DDR1_AC_5	3385.999
DDR1_AC_6	4740.332
DDR1_AC_7	5654.689
DDR1_AC_8	5367.616
DDR1_AC_9	5087.63
DDR1_AC_10	6433.623
DDR1_AC_11	6384.632
DDR1_AC_12	4389.482
DDR1_AC_13	4968.912
DDR1_AC_14	6687.743
DDR1_AC_15	2391.553
DDR1_AC_20	5662.318
DDR1_AC_21	5536.219
DDR1_AC_22	5318.645
DDR1_AC_23	4745.42
DDR1_AC_24	3798.847
DDR1_AC_25	3783.427
DDR1_AC_26	8556.225
DDR1_AC_28	4621.285
DDR1_AC_29	2456.664
DDR1_AC_30	3850.486
DDR1_AC_31	4298.882
DDR1_AC_32	4000.001
DDR1_AC_33	4537.187
DDR1_AC_34	2765.553
DDR1_AC_35	2977.044
DDR1_AC_36	1828.854

Amlogic Proprietary and Confidential
Copyright © Amlogic. All rights reserved.

Net Name	Net Length(um)
DDR1_AC_37	1587.874
DDR1_AC_38	4233.489
DDR1_DQ0	6467.507
DDR1_DQ1	4363.669
DDR1_DQ2	3529.762
DDR1_DQ3	4032.636
DDR1_DQ4	4709.173
DDR1_DQ5	6147.046
DDR1_DQ6	5173.892
DDR1_DQ7	4547.813
DDR1_DQ8	5402.701
DDR1_DQ9	3817.321
DDR1_DQ10	3717.225
DDR1_DQ11	4647.977
DDR1_DQ12	3280.81
DDR1_DQ13	2416.644
DDR1_DQ14	2152.137
DDR1_DQ15	4184.853
DDR1_DQ16	3347.275
DDR1_DQ17	4359.613
DDR1_DQ18	4859.07
DDR1_DQ19	5239.311
DDR1_DQ20	3643.34
DDR1_DQ21	4099.978
DDR1_DQ22	5347.057
DDR1_DQ23	4487.338
DDR1_DQ24	3715.342
DDR1_DQ25	2923.508
DDR1_DQ26	2622.058
DDR1_DQ27	3912.034
DDR1_DQ28	2721.158
DDR1_DQ29	2403.124
DDR1_DQ30	1922.521
DDR1_DQ31	4047.65
DDR1_DQM0	4793.601

Amlogic Proprietary and Confidential
Copyright © Amlogic. All rights reserved.

Net Name	Net Length(um)
DDR1_DQM1	3320.179
DDR1_DQM2	5089.688
DDR1_DQM3	4554.696
DDR1_DQSN0	5372.125
DDR1_DQSN1	3806.477
DDR1_DQSN2	3229.741
DDR1_DQSN3	3489.591
DDR1_DQSP0	5443.279
DDR1_DQSP1	3752.942
DDR1_DQSP2	3370.435
DDR1_DQSP3	3506.484
ENET_RXN	3845.474
ENET_RXP	4081.691
ENET_TXN	4210.243
ENET_TXP	4466.105
GPIOB_0	2345.776
GPIOB_1	1849.83
GPIOB_2	1979.736
GPIOB_3	2088.165
GPIOB_4	2999.87
GPIOB_5	2703.343
GPIOB_6	3412.689
GPIOB_7	2960.572
GPIOB_8	3595.539
GPIOB_10	2083.686
GPIOB_11	2405.297
HDMIRX_ARCTXN	4966.187
HDMIRX_ARCTXP	5112.399
HDMIRX_A_CLKN	5624.866
HDMIRX_A_CLKP	5678.996
HDMIRX_A_D0N	5413.571
HDMIRX_A_D0P	5390.577
HDMIRX_A_D1N	5775.753
HDMIRX_A_D1P	5648.613
HDMIRX_A_D2N	6659.452

Amlogic Proprietary and Confidential
Copyright © Amlogic. All rights reserved.

Net Name	Net Length(um)
HDMIRX_A_D2P	6444.356
HDMIRX_B_CLKN	5582.84
HDMIRX_B_CLKP	5245.85
HDMIRX_B_D0N	3781.092
HDMIRX_B_D0P	4138.724
HDMIRX_B_D1N	4626.73
HDMIRX_B_D1P	4496.135
HDMIRX_B_D2N	5178.643
HDMIRX_B_D2P	4997.941
HDMIRX_C_CLKN	6477.257
HDMIRX_C_CLKP	6304.805
HDMIRX_C_D0N	3187.457
HDMIRX_C_D0P	3271.665
HDMIRX_C_D1N	3767.361
HDMIRX_C_D1P	3739.942
HDMIRX_C_D2N	3423.348
HDMIRX_C_D2P	3466.655
HDMITX_ARCRXN	2223.555
HDMITX_ARCRXP	2064.952
HDMITX_CLKN	5014.033
HDMITX_CLKP	4858.154
HDMITX_D0N	4305.429
HDMITX_D0P	4133.65
HDMITX_D1N	4243.009
HDMITX_D1P	3985.343
HDMITX_D2N	3857.55
HDMITX_D2P	3444.897
PCIE_CLK_N	2837.101
PCIE_CLK_P	2590.389
PCIE_RXN	2827.673
PCIE_RXP	2767.197
PCIE_TXN	2031.891
PCIE_TXP	1928.492
USB30_RXN	4221.597
USB30_RXP	4260.951

Amlogic Proprietary and Confidential
Copyright © Amlogic. All rights reserved.

Net Name	Net Length(um)
USB30_TXN	3499.622
USB30_TXP	3323.657
USB_A_OTG_DM	2948.228
USB_A_OTG_DP	2918.029
USB_B_OTG_DM	4237.569
USB_B_OTG_DP	4265.271
VX1_A_0N	2137.44
VX1_A_0P	2439.972
VX1_A_1N	3100.185
VX1_A_1P	3068.469
VX1_A_2N	4195.452
VX1_A_2P	4078.917
VX1_A_3N	2993.326
VX1_A_3P	2782.911
VX1_A_4N	3900.206
VX1_A_4P	4021.289
VX1_A_5N	1946.558
VX1_A_5P	1988.601
VX1_A_6N	3533.938
VX1_A_6P	3397.285
VX1_A_7N	2700.472
VX1_A_7P	2523.065
VX1_B_0N	3854.896
VX1_B_0P	4013.197
VX1_B_1N	2973.577
VX1_B_1P	2856.923
VX1_B_2N	3806.325
VX1_B_2P	3811.417
VX1_B_3N	3680.499
VX1_B_3P	3819.065
VX1_B_4N	2313.953
VX1_B_4P	2282.565
VX1_B_5N	2451.007
VX1_B_5P	2712.78
VX1_B_6N	2325.928

Amlogic Proprietary and Confidential
Copyright © Amlogic. All rights reserved.

Net Name	Net Length(um)
VX1_B_6P	2450.613
VX1_B_7N	2061.203
VX1_B_7P	2082.518

Amlogic Proprietary and Confidential
Copyright © Amlogic. All rights reserved.