ART FILM - SMT_TOP

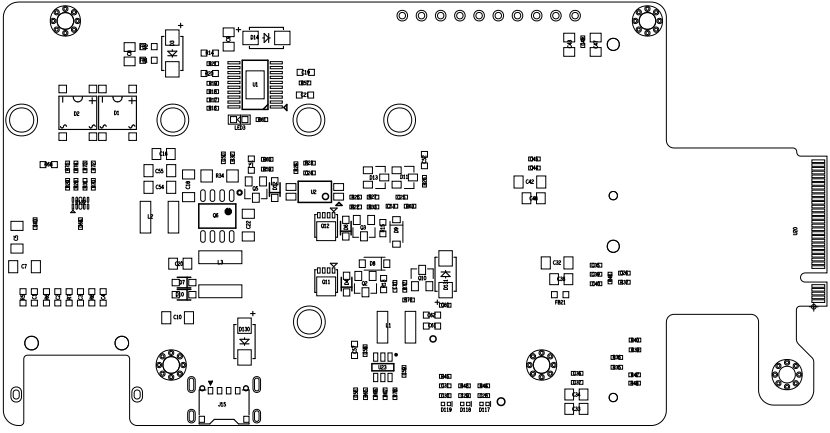

ART FILM - SMT_TOP

ART FILM - SMT_BOT

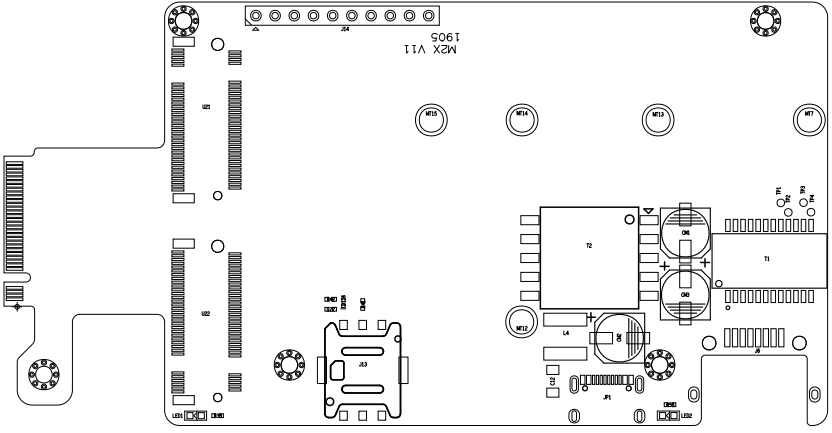

ART FILM - SMT_BOT